LG

MICRO HI-FI SYSTEM
OWNER'S MANUAL

MODEL: LX-M240 (LX-M240A/D/X, LXS-M240)
LX-M241 (LX-M241A/D/X, LXS-M241)
LX-M340 (LX-M340A/D/X, LXS-M340)
LX-M341 (LX-M341A/D/X, LXS-M341)

Please read this manual carefully before operating your set.
Retain it for future reference.

Designs and specifications are subject to change without notice for improvement.

MP3 CD-R/RW

COMPACT disc DIGITAL AUDIO

CAUTION

RISK OF ELECTRIC SHOCK DO NOT OPEN

CAUTION:TO REDUCE THE RISK OF ELECTRIC SHOCK DO NOT REMOVE COVER(OR BACK) NO USER SERVICEABLE PARTS INSIDE. REFER SERVICING TO QUALIFIED SERVICE PERSONNEL.

Explanation Graphical Symbols:

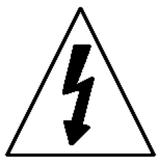

The lightning flash with arrowhead symbol, within an equilateral triangle is intended to alert the user to the presence of uninsulated dangerous voltage within the product's enclosure that may be of sufficient magnitude to constitute a risk of electric shock to persons.



The exclamation point within an equilateral triangle is intended to alert the user to the presence of important operating and maintenance(servicing) instructions in the literature accompanying the appliance.

WARNING

TO REDUCE THE RISK OF FIRE OF ELECTRIC SHOCK, DO NOT EXPOSE THIS APPLIANCE TO RAIN OR MOISTURE.
To avoid electrical shock, do not open the cabinet, Refer servicing to qualified personnel only.

The apparatus shall not be exposed to dripping or splashing and that no objects filled with liquids, such as vases, shall be placed on the apparatus.

WARNING

Do not install this equipment in a confined space such a bookcase or similar unit.

CAUTION

Use of controls or adjustments or performance of procedures other than those specified herein may result in hazardous radiation exposure.

Laser component in this product is capable of emitting radiation exceeding the limit for Class 1.

CAUTION:INVISIBLE LASER RADIATION WHEN OPEN AND INTERLOCKS DEFEATED. AVOID EXPOSURE TO BEAM.

VARNING:OSYNLIG LASERSTRÅLNING NÄR DENNA DEL ÄR ÖPPNAD STRÅLEN ÄR FARLIG.

Attention: Quand l'appareil est ouvert, ne pas s'exposer aux radiations invisibles du faisceau laser.

This label is located on the interior.

CLASS 1 LASER PRODUCT
KLASSE 1 LASER PRODUKT
LUOKAN 1 LASER LAITE
KLASS 1 LASER APPARAT
CLASSE 1 PRODUCT LASER

This Compact Disc player is classified as a CLASS 1 LASER product.
The CLASS 1 LASER PRODUCT label is located on the exterior.

Contents

1 Introduction 4
Symbols Used in this Manual 4
Notes on Tapes 4
Notes on Discs 4
Handling discs 4
Storing discs 4
Cleaning discs 4
Front / Rear Panel 5
Remote Control 6
Remote Control battery installation . . .6
Remote Control Operation Range 6
Display Window 7

2 Installation 8
Speaker System Connection 8
Antenna (Aerial) Connections 8
Setting the Voltage (OPTIONAL) 9
Auxiliary Devices 9
Audio Adjustment 9
Volume Adjustment 9
Sound Quality Adjustment 9
Headphone Socket 9
MUTE 9
SURROUND ON/OFF 9
XDSS (Extreme Dynamic Sound System) 9
OAO (Orientation Acoustic Optimizer) ON/OFF 9

3 Operation 10
Auto Function Selection 10
Setting the Clock 10
Using the Sleep Function 10
Timer 11
RDS Function - OPTIONAL 12
About RDS 12
RDS Tuning 12
RDS Display Options 12
Programme Search (PTY) 12
Presetting the Radio Stations 13
Listening to the Radio 13
Tape Playback 14
Basic Playback 14
To Stop Play 14
Tape Counter Reset 14
To Play Rewind or Fast Forward 14
Tape Recording 14
Basic Recording 14
Recording from Radio,CD or Auxiliary source 14
CD to Tape Synchronized Recording 14
CD Playback 15-16
Basic Playback 15
Pause Playback 15
Stop Playback 15
Skipping a Track 15
Searching a Track 15
Repeat 15
To check MP3 file information 15
Program Play 16
About MP3 16

4 Maintenance and Service 17-18
Shipping the Unit 17
Cleaning the Unit 17
Service 17
Troubleshooting 18

5 Reference 19
Specifications 19

1 Introduction

To ensure proper use of this product, please read this owner's manual carefully and retain for future reference.

This manual provides information on the operation and maintenance of your CD player. Should the unit require service, contact an authorized service location (refer to Chapter 4, Maintenance and Service).

Symbols Used in this Manual

⚠ Indicates hazards likely to cause harm to the unit itself or other material damage.

Indicates special notes and operating features.

Notes on Tapes

Preventing record
Removing the tab(s) of the cassette (with a small screwdriver) will prevent accidental erasure.

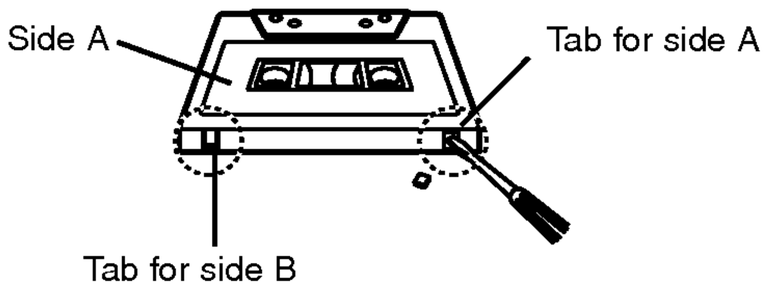

To record again, cover the hole of the tab with adhesive tape.

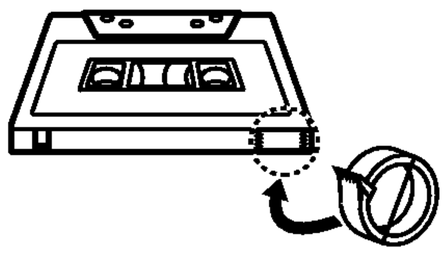

Adhesive tape.

Notes on Discs

Handling discs
Do not touch the playback side of the disc. Hold the disc by the edges so that fingerprints do not get on the surface. Never stick paper or tape on the disc.



Storing discs
After playing, store the disc in its case. Do not expose the disc to direct sunlight or sources of heat and never leave it in a parked car exposed to direct sunlight.

Cleaning discs
Fingerprints and dust on the disc can cause poor picture quality and sound distortion. Before playing, clean the disc with a clean cloth. Wipe the disc from the center out.

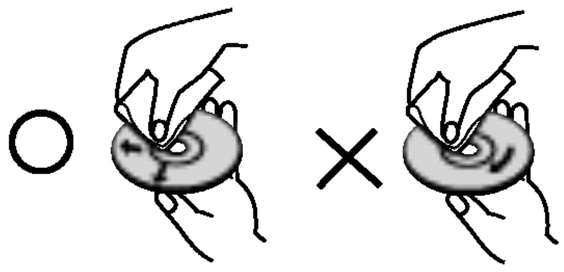

Do not use strong solvents such as alcohol, benzine, thinner, commercially available cleaners, or anti-static spray intended for older vinyl records.

Front / Rear Panel

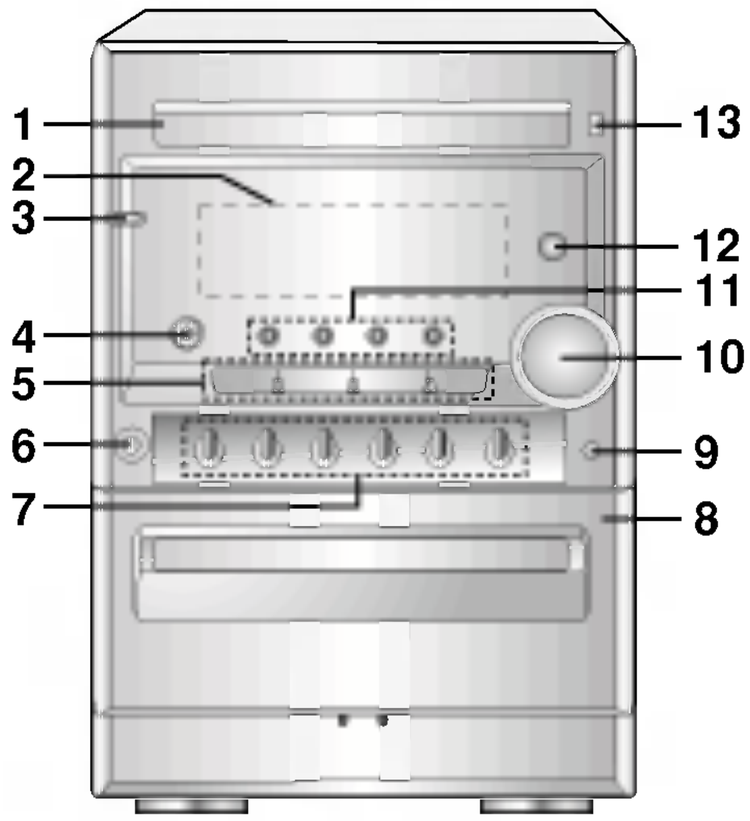

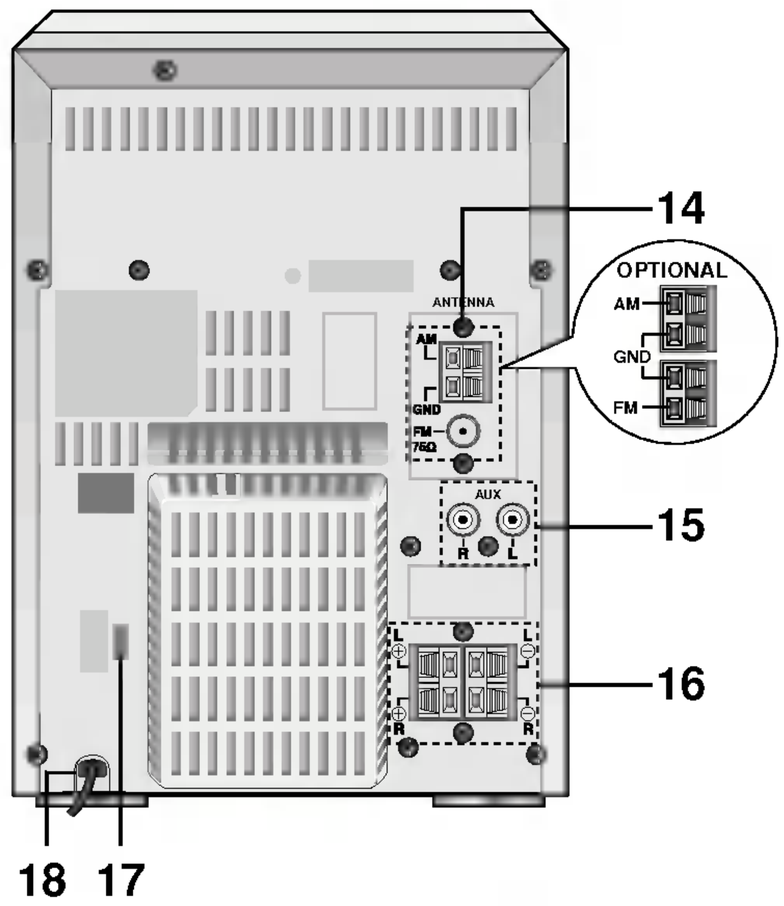

1. CD DOOR
2. DISPLAY
3. POWER (⏻ STANDBY/ON) button
4. OAO (Orientation Acoustic Optimizer) button
5. FUNCTION SELECT button
   (TUNER/BAND, MP3/CD, TAPE, AUX)
6. HEADPHONE SOCKET (🎧 PHONES):
   ø3.5mm
7. • RECORD/ RECORD PAUSE (●/II) button
   • TUNING (-/+) button
   • CD SKIP/SEARCH (⏮ ◀◀ / ▶▶ ⏭) button
   • TAPE REWIND/FAST FORWARD
   (⏮ ◀◀ / ▶▶ ⏭) button
   • PRESET (-/+) button (TUNER)
   • REVERSE PLAY (◀) button (TAPE):
   OPTIONAL
   • PLAY (▶) button (TAPE, CD)
   • STOP (■) button (TAPE, CD)
   • CLEAR button
8. ⏏ PUSH EJECT position -DECK
9. • RDS button : OPTIONAL
   • SET (CLOCK/ TIMER) button
   • CD PAUSE (CD II) button
   • COUNTER RESET button (COUNTER) :
   OPTIONAL
10. VOLUME CONTROL KNOB
11. • SURROUND button
    • CLOCK button
    • TIMER button
    • CD SYNC. button
    • MODE/RIF button
    • PLAY MODE button : OPTIONAL
12. REMOTE SENSOR
13. CD OPEN/CLOSE (⏏ OPEN/CLOSE) button
14. ANTENNA TERMINAL
15. AUXILIARY INPUT SOCKET
16. SPEAKER TERMINAL
17. VOLTAGE SELECT SWITCH : OPTIONAL
18. POWER CORD

Remote Control

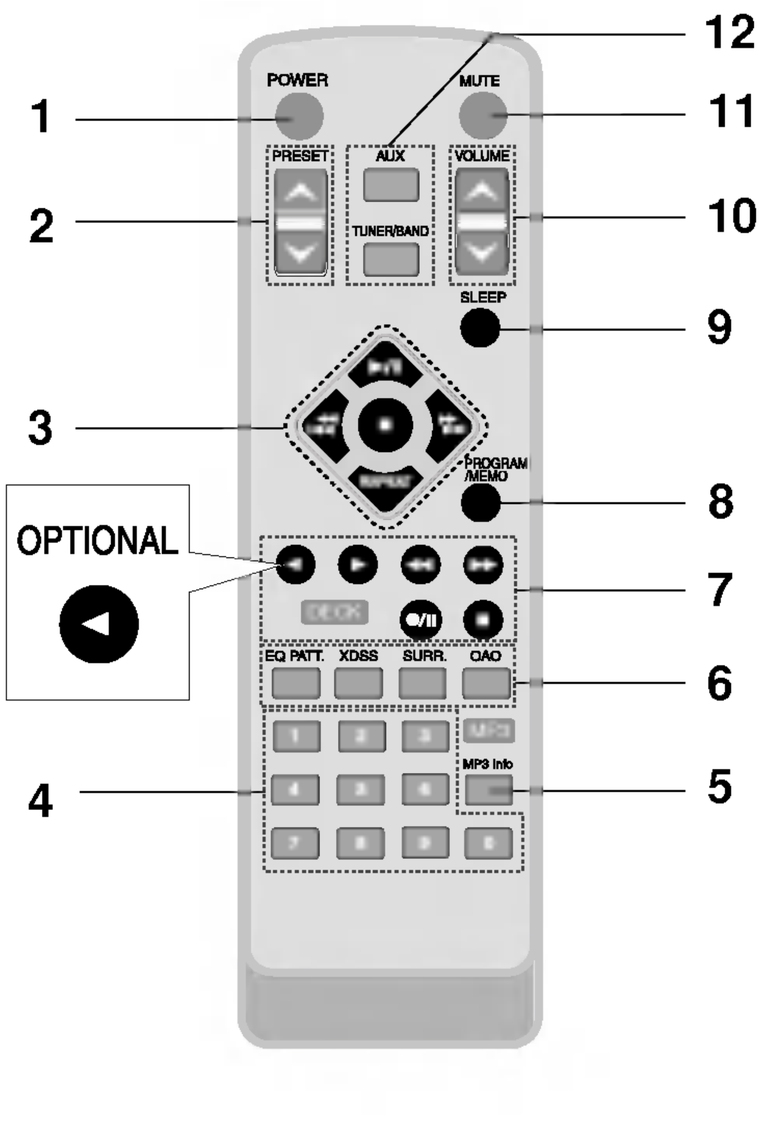

1. POWER button
2. PRESET (⮟/⮝) buttons
3. CD FUNCTION buttons
   - PLAY/PAUSE (▶/❚❚) button
   - CD STOP(■) button
   - CD SKIP/SEARCH (|◀◀ ◀◀ / ▶▶ ▶▶|) button
   - REPEAT button
4. NUMBER buttons
5. MP3 file information display (Mp3 Info) button
6. • EQUALIZER PATTERN (EQ PATT.) button
   - XDSS button
   - SURROUND (SURR.) button
   - OAO (Orientation Acoustic Optimizer) button
7. TAPE FUNCTION buttons
   - RECORD/ RECORD PAUSE button (●/❚❚)
   - BACKWARD PLAY button (◀) : OPTIONAL
   - FORWARD PLAY (▶) button
   - TAPE STOP button (■)
   - FAST FORWARD (▶▶) button
   - REWIND (◀◀) button
8. PROGRAM/MEMO button
9. SLEEP button
10. VOLUME CONTROL (⮟/⮝) button
11. MUTE button
12. • TUNER/ BAND button
    - AUX button

Remote Control battery installation

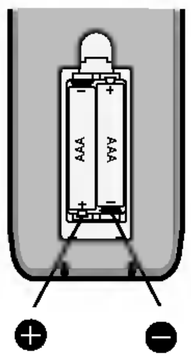

Detach the battery cover on the rear of the remote control, and insert two R03 (size AAA) batteries with ⊕ and ⊖ aligned correctly.

⚠**Caution:** Do not mix old and new batteries. Never mix different types of batteries (standard, alkaline, etc.).

Remote Control Operation Range

Point the remote control at the remote sensor and press the buttons.

Distance: About 23 ft (7 m) from the front of the remote sensor.

Angle: About 30° in each direction of the front of the remote sensor.

Display Window

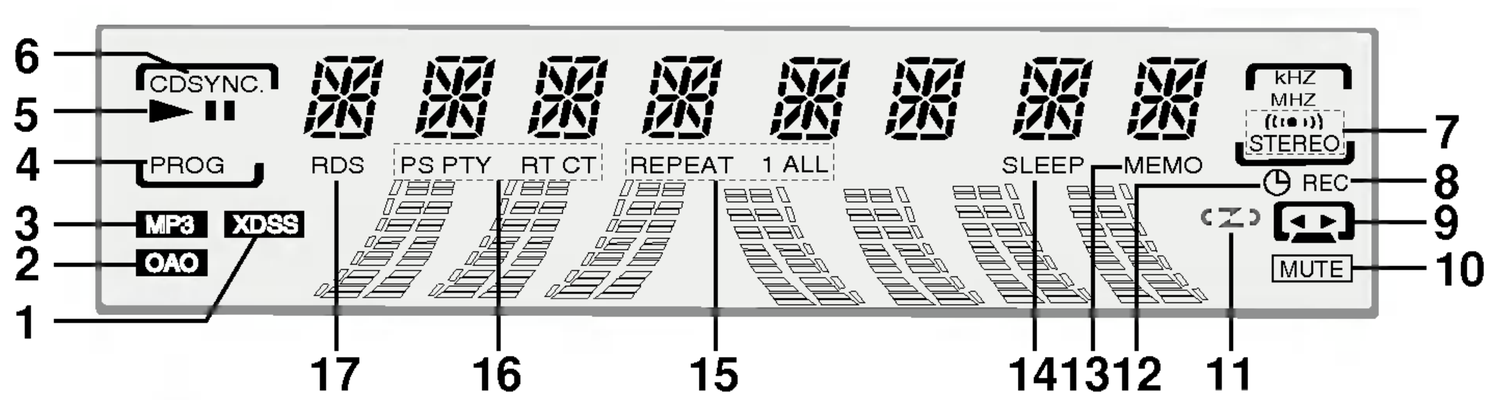

1. XDSS (Extreme Dynamic Sound System) indicator
2. OAO (Orientation Acoustic Optimizer) indicator
3. MP3 indicator
4. PROGRAM indicator
5. CD PLAY/ PAUSE indicator
6. CD SYNCHRO RECORDING indicator
7. FM STEREO indicator
8. RECORD/ RECORD PAUSE indicator
9. TAPE PLAY DIRECTION indicator (OPTIONAL)
10. MUTE indicator
11. PLAY MODE indicator (OPTIONAL)
12. TIMER indicator
13. MEMORY indicator
14. SLEEP indicator
15. CD REPEAT indicator
16. PS, PTY, RT, CT indicator (OPTIONAL)
17. RDS indicator (OPTIONAL)

2 Installation

Speaker System Connection

Connect the speakers using the supplied speaker cords by matching the colors of the terminals and those of the cords. To obtain the best possible surround sound, adjust the speaker parameters (distance, level, etc.).

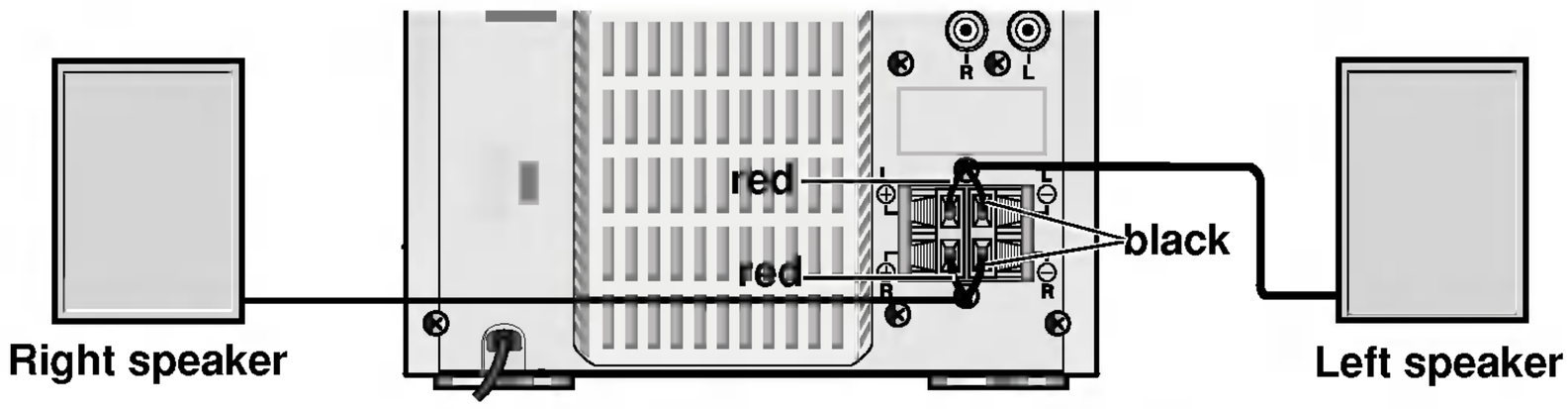

Notes

- Be sure to match the speaker cord to the appropriate terminal on the components: + to + and – to –. If the cords are reversed, the sound will be distorted and will lack base.
- If you use front speakers with low maximum input rating, adjust the volume carefully to avoid excessive output on the speakers.
- Do not disassemble the front cover of supplied speaker.

Antenna (Aerial) Connections

Connect the supplied FM/AM antennas for listening to the radio.

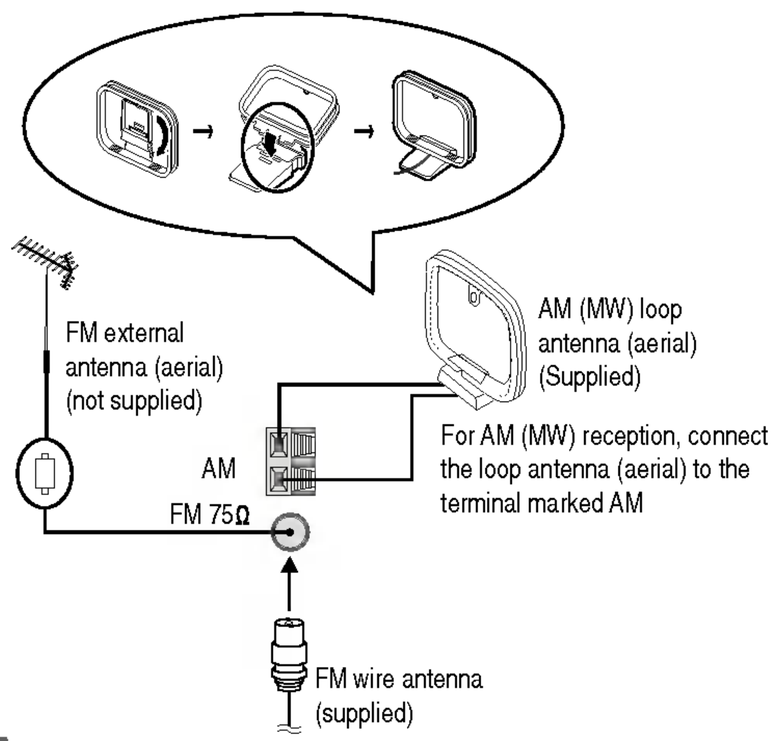

(OPTIONAL)

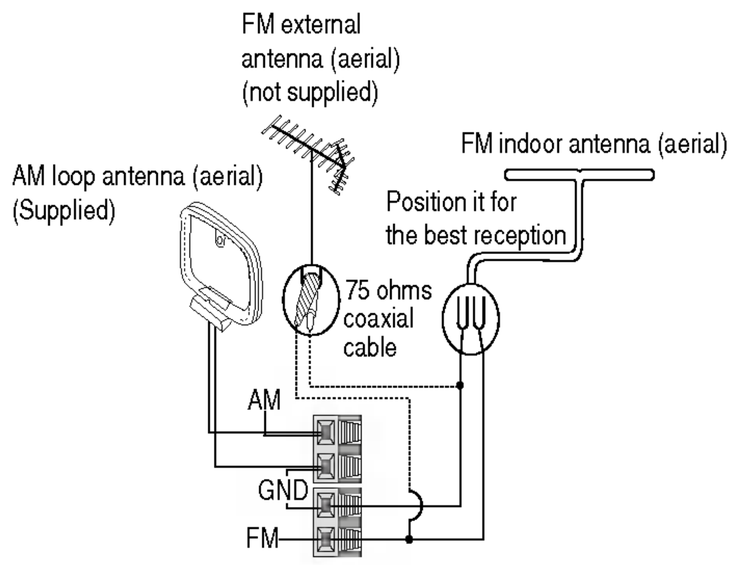

Notes

- To prevent noise pickup, keep the AM loop antenna away from the unit and other components.
- Be sure to fully extend the FM wire antenna.
- After connecting the FM wire antenna, keep it as horizontal as possible.

Setting the voltage (OPTIONAL)

If your set is equipped with a voltage selector at the back side, be sure to set it to your local power supplied before connecting the AC power cord.

Auxiliary Devices

Connect an auxiliary device such as a. TV or VCR via the rear mounted AUX sockets and press AUX.

Note
You can also record from the auxiliary input source, (see the recording section).

Audio Adjustment

Volume Adjustment

- Turn the VOLUME CONTROL KNOB clockwise to increase the sound level, or counterclockwise to decrease it.
- Using the remote control, press VOLUME CONTROL (^) to increase the sound level, or (v) to decrease it.

Sound Quality Adjustment

- You can choose between 4 fixed sound impressions using the EQ PATT. button on the remote control.

FLAT	linear frequency response
ROCK	more bass, more treble
POP	less bass, less treble
CLASSIC	for orchestral music

Headphone Socket

Connect a stereo headphone plug (Ø 3.5mm) into the headphone jack to listen to the sound through headphones. The speakers are automatically disconnected when you plug in the headphones (not supplied).

MUTE

Press MUTE to temporarily stop the sound such as when you answer the telephone. The MUTE indicator flashes in the display window.

SURROUND ON/OFF

You can choose between 2 surround sound modes or turn it off by pressing SURROUND (SURR.).

XDSS (Extreme Dynamic Sound System)

Press XDSS to reinforce treble, bass and the surround effect. The “XDSS ON” or “XDSS OFF” indicator lights. To cancel, press XDSS again.

OAO (Orientation Acoustic Optimizer) ON/OFF

Press OAO to reinforce the bass sound.
The “OAO ON” or “OAO OFF” indicator lights.
To cancel, press OAO again.

3 Operation

Auto Function Selection

- If you press CD PLAY/ PAUSE (▶/Ⅱ) during radio receiving or CASSETTE play, CD playback will begin.
- If you press PRESET (⮟/⮝) or TUNER/ BAND during CD or CASSETTE play, radio function will work.

Setting the Clock

1. Press CLOCK.
   (If the clock is requires setting, press and hold CLOCK for more than 2 seconds.)

2. Select a 24 hour cycle or 12 hour cycle by pressing PRESET (-)/(+).

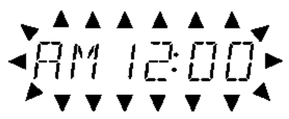

(12HR) or



(24HR)

3. Press SET to confirm the selected hour cycle.

4. Use PRESET (-)/(+) to set the correct hours.

5. Press SET.

6. Use PRESET (-)/(+) to set the correct minutes.

7. Press SET and the correct time is shown on the display.

8. Press CLOCK at any time to display the time for about 5 seconds.

Using the Sleep Function

When the sleep timer is used, the power is automatically turned off after the specified time has elapsed.

1. To specify the time delay before the power is turned off, press SLEEP.
   In the display window you see SLEEP 90 for about 5 seconds. This means that the system turns off automatically after 90 minutes.

   Press SLEEP until the desired time is displayed.
   Note: Each time the button is pressed the time interval is reduced by 10 minutes. i.e. 80...70... etc.

2. To check the remaining time until the power is turned off, press SLEEP while the sleep function is active. The time remaining is displayed for about 5 seconds.

Note
If you press SLEEP while the sleep time is displayed, the SLEEP time is reset.

3. To cancel the sleep timer mode, press the SLEEP button repeatedly until 10 appears, and then press SLEEP once again while “SLEEP 10” indicator is displayed.

Timer

With the TIMER function you can have the radio reception and recording, CD play, tape play or auxiliary source play and recording turned on and off at the time desired.

1. Press CLOCK to check the current time.
   (If you don't set clock, timer function doesn't work.)

2. Press TIMER to enter the timer setting mode.
   (If you want to correct the previous memorized TIMER setting, press and hold the TIMER button more than 2 seconds.
   - The previous memorized timer on time and TIMER indicators appear in the display.)

3. Each function (TUNER-CD-TAPE) flashes in the display window in turn. Press SET when the desired function is flashing.

4. 1. a. When you select the TUNER function, 'PLAY' and 'REC' indicator flash in the display window alternately for about 3 seconds.
   'PLAY' indicator : TUNER play only
   'REC' indicator : TUNER play and recording
   b. Press SET when the desired function is flashing.
   c. Select the previous memorized preset number with PRESET (-)/(+) button and press SET.
   - 'ON TIME' indicator appears for about 0.5 seconds in the display window and then disappears.
   2. When you select the CD or TAPE function,
   - 'ON TIME' indicator appears for about 0.5 seconds in the display window and then disappears.

5. Set the hour to switch on by pressing PRESET (-)/(+).

6. Press SET to confirm the hour to switch on.

7. Set the minute to switch on by pressing PRESET (-)/(+).

8. Press SET to confirm the minute to switch on.
   - 'OFF TIME' indicator appears for about 0.5 seconds in the display window and then disappears.

9. Set the hour to switch off by pressing PRESET (-)/(+).

10. Press SET to confirm the hour to switch off.

11. Set the minute to switch off by pressing PRESET (-)/(+).

12. Press SET.

13. Adjust the volume level by pressing PRESET (-)/(+).

14. Press SET.
    "TIMER" appears in the display window and the timer setting has been completed.

15. Switch the system off.
    The selected function is automatically switched on and off at the time set.

To cancel or check the timer

Each time the TIMER button is pressed you can select the timer set or cancel. You can also check the timer setting status.
To activate or check the timer, press the TIMER button so that "⏲" appears in the display window.
To cancel the TIMER, press the TIMER button so that "⏲" disappears in the display window.

RDS Function - OPTIONAL

About RDS

This unit is equipped with RDS (Radio Data System), which brings a wide range of information to FM radio. Now in use in many countries, RDS is a system for transmitting station call signs or network information, a description of station programme type text message about the station or specifics of musical selection and the correct time.

RDS Tuning

When a FM station is tuned in and it contains RDS data, the unit will automatically display the station's call sign and the RDS indicator will light in the Display Window as well as indicators for the programme type recognition (PTY), Radio Text (RT), Clock Time (CT) and RDS services programme (PS) if transmitted by the station.

RDS Display Options

The RDS system is capable of transmitting a wide variety of information in addition to the initial call sign that appears when a station is first tuned. In normal RDS operation the display will indicate the station name, broadcast network or call letters. Pressing **RDS** on the front panel enables you to cycle through the various data types in the sequence:

(PS → FREQUENCY → PTY → RT → CT)

- PTY (Programme type recognition)- The name of the programme type is shown in the Display Window.
- RT (Radio text recognition)- The name of the radio text is shown in the Display Window.
- CT (Time controlled by the channel)- Enables the unit to receive the actual time and show it in the Display Window.
- PS (Programme Service name)- The name of the channel is shown in the Display Window.

Note

Some RDS stations may not choose to include some of these additional features. If the data required for the selected mode is not being transmitted, the Display Window will show a PTY NONE, RT NONE, CT NONE, PS NONE message.

Programme Search (PTY)

A major benefit of RDS is its ability to encode broadcasts with Programme Type (PTY) codes that indicate the type of material being broadcast. The following list shows the abbreviations used to indicate each PTY along with an explanation of the PTY.

NEWS	News
AFFAIRS	Current Affairs
INFO	Information
SPORT	Sports
EDUCATE	Educational
DRAMA	Drama
CULTURE	Culture
SCIENCE	Science
VARIED	Varied Speech Programme
POP M	Popular Music
ROCK M	Rock Music
EASY M	Easy Listening Music
LIGHT M	Classical Music
CLASSICS	Serious Classical Music
OTHER M	Other Music
WEATHER	Weather Information
FINANCE	Financial Programmes
CHILDREN	Children s Programmes
SOCIAL	Social Affairs Programmes
RELIGION	Religious Broadcasts
PHONE IN	Phone-In Programmes
TRAVEL	Travel and Touring
LEISURE	Leisure and Hobby
JAZZ	Jazz Music
COUNTRY	Country Music
NATION M	National Music
OLDIES	Oldies Music
FOLK M	Folk Music
DOCUMENT	Documentary Programmes
TEST	Station Alarm Test Message
ALARM 1	Emergency Broadcast Information

You may search for a specific Programme Type (PTY) by following these steps.

1. Press TUNER/BAND to select FM mode.
2. Select a desired station by pressing TUNING (-)/(+).
   When the RDS transmission is received, the display shows the program service name (PS) after RDS indicator appears.
3. Press the RDS to select PTY mode.
4. To search for a different PTY, press the PRESET (-)/(+) while the last PTY in use is still displayed to scroll through the list of available PTY types.
5. When the PTY is selected, press the ⏮◀◀ / ▶▶⏭ within 5 seconds.
   The unit will go into an automatic search mode and attempt to find the next station with acceptable signal strength that matches the desired PTY type.

Presetting the Radio Stations

You can preset 30 stations for FM and AM.
Before tuning, make sure that you have turned down the volume to the minimum.

1. Press TUNER/BAND to select the frequency (AM or FM) you want.
   Every time you press this button, AM and FM changes alternately.

2. Select a station you want by pressing TUNING (-)/(+) buttons.
   Tuning in automatically
   - Press TUNING (-)/(+) for more than 0.5 second. Scanning stops when the unit tunes in a stations.

   Tuning in manually
   - Press TUNING (-)/(+) briefly and repeatedly.

3. Press PROGRAM/MEMO on the remote control.
   A preset number will flash in the display window.

4. Press PRESET (-)/(+) (or PRESET (⮟/⮝) on the remote control) to select the preset number you want.

5. Press PROGRAM/MEMO again.
   The station is stored.

6. Repeat steps 1 (or 2) to 5 to store other stations.

To delete all the memorized stations

Press and hold PROGRAM/MEMO on the front panel for about two seconds, “CLEAR” appears in the display window and then press CLEAR again, the stations are deleted.

For your reference

If all stations have already been entered, FULL message will appear in the display window for a moment and then a preset number will flash. To change the preset number, follow the steps 4-5.

To recall presets

Press and hold PRESET (-)/(+) (or PRESET (⮟/⮝) on the remote control) until the desired preset number appears or press it repeatedly.

Listening to the Radio

1. Press TUNER/BAND to select the frequency (AM or FM) you want.
   Every time you press this button, AM and FM changes alternately.
   The last received station is tuned in.

2. Press PRESET (-)/(+) (or PRESET (⮟/⮝) on the remote control) repeatedly to select the preset station you want.
   - Each time you press the button, the unit tunes in one preset station at a time.

3. Adjust the volume by rotating VOLUME CONTROL KNOB (or pressing VOLUME (⮟/⮝) on the remote control) repeatedly.

To listen to non-preset radio stations

- Use manual or automatic tuning in step 2 on left.
- For automatic tuning, press and hold TUNING (-)/(+) on the front panel.

To turn off the radio

Press POWER (⏻ STANDBY/ON) to turn the unit off or select another function mode (MP3/CD or TAPE).

For your reference

- If an FM program is noisy
  Press MODE/RIF so that “STEREO” disappears in the display window. There will be no stereo effect, but the reception will improve. Press MODE/RIF again to restore the stereo effect.
- To improve reception
  Reposition the supplied antennas.

Notes

- Use MODE/RIF (Radio Interference Filter) function to switch to mono reception if stereo reception is distorted by noise.
- When recording the MW(AM) or LW broadcast, beat noises may occur. If it does, press MODE/RIF once.

Tape Playback

Note: Use only normal tapes.

Basic Playback

1. Press TAPE to select tape function. ("NO TAPE" appears in the display window.)
2. Open the cassette door by pushing ▲ PUSH EJECT position.
3. Insert a cassette with the tape side to the bottom and then close deck.
4. Press PLAY (▶ or ◀: OPTIONAL).

To Stop Play

Press STOP(■) during playback.

Tape Counter Reset

Press COUNTER RESET (COUNTER) during playback. Playing time appears "TP - 0000" in display window.

To Play Rewind or Fast Forward

After pressing ⏮◀◀ / ▶▶⏭ on the front panel or ◀◀ / ▶▶ on the remote control during playback, or stop, press PLAY(▶) at the point you want.

AUTO STOP DECK

- After auto stop deck plays only front side, the unit stops automatically.

AUTO REVERSE DECK:OPTIONAL

- You can select direction of the cassette you want by pressing PLAY MODE.

Pressing	Display	Function
Once		After the cassette plays front or reverse (backward play) side, stops automatically.
Twice		After the cassette plays front and reverse side, stops automatically.
Three times		After the cassette plays six times repeatedly front and reverse side, stops automatically.

Tape Recording

Wind the tape to the point recording starts.
Note: Use only normal tapes.

Basic Recording

1. Select the function (MP3/CD, TUNER/BAND or AUX) you want to record.
2. Open the cassette deck and insert a blank cassette into the cassette compartment.

   To set the recording direction :OPTIONAL
   Press PLAY MODE repeatedly to set the recording direction.

Recording from Radio,CD or Auxiliary source

1. Press ●/II on the front panel or the remote control and then select the MP3/CD, TUNER or AUX function.
   - "REC" flashes and holds the cassette in pause mode.
2. Press ●/II or PLAY(▶) on the front panel or the remote control.
   The recording begins.

To pause recording
Press ●/II during recording.
- "REC" flashes in display window.

To stop recording
Press TAPE STOP(■).

CD to Tape Synchronized Recording

The CD synchro recording function dubs a complete CD and programmed titles automatically into a cassette.

1. Press CD SYNC. in stop mode.
   "REC" flashes and "CD SYNC" displays in the display window.
2. The synchronized recording is started automatically after about 8 seconds.

Notes

- If you wish to record from the desired track, select the desired track with CD SKIP/ SEARCH (⏮◀◀ / ▶▶⏭) before commencing CD synchro recording.
- The function change is not possible during recording.

CD Playback

Basic Playback

1. Press MP3/CD to select CD function.
   If no disc is loaded then “NO DISC” is displayed.
2. Press CD OPEN/CLOSE (⏏OPEN/ CLOSE) and place the disc into the disc tray.

Note
To load an 8cm (3 inch) disc, put it onto the inner circle of the tray.

3. Press CD OPEN/CLOSE (⏏OPEN/ CLOSE) to close the disc compartment.
   Audio CD: “READING” appears in the display window, and then the total number of tracks and the playing time are displayed.
   MP3 CD: “READING” appears in the display window, and then the total number of files is displayed.
4. Press PLAY (▶) on the front panel or PLAY/ PAUSE (▶/II) on the remote control.
   In addition, you can also play an Audio CD or MP3 CD using the NUMBER buttons.

Pause Playback

Press CD PAUSE (CD II) or PLAY/ PAUSE (▶/II) on the remote control during playback.
Press this button again it to resume play.

Stop Playback

Press STOP(■) on the front panel or CD STOP(■) on the remote control. Press STOP(■) during playback.

Skipping a Track

- Press the CD SKIP/SEARCH (⏮◀◀ / ▶▶⏭) button to go to the next track.
- When the CD SKIP/SEARCH (⏮◀◀ / ▶▶⏭) button is pressed once midway through a track, the player returns to the start of that track. When it is pressed again, a track is skipped each time the button is pressed.

Searching a Track

After pressing and holding ⏮◀◀ / ▶▶⏭ button on the remote control during playback, then release at the point you want.

Notes
This function is not available to play a MP3 file.

Repeat

To play one track repeatedly
Press REPEAT once during playback.
- “REPEAT 1” appears in the display.

To play all tracks repeatedly
Press REPEAT again during playback.
- “REPEAT ALL” appears in the display.

To cancel repeat play
Press REPEAT once more during playback.
- “Repeat indicator” disappears.

To check MP3 file information

Press the MP3 Info button during MP3 file playback.
- The information (Title, Artist or Album) of the MP3 file will be shown in the display window.
- If there is no the information of the MP3 file, “NO ID3 TAG” indicator will be shown in the display window.

Note
This unit can play a CD-R or CD-RW that contains audio titles or MP3 files.

Program Play

You can arrange the order of the tracks on the discs and create your own program. The program can contain up to 20 tracks.

1. Press PROGRAM/MEMO on the remote control on the stop mode.
2. Press |◀◀ ◀◀ / ▶▶ ▶▶| to select the track.
   EX) "04 P-01" will be shown in the display.
   Program number
   Track number
3. Press PROGRAM/MEMO on the remote control.
4. Repeat 1~3.
5. Press PLAY (▶) on the front panel or PLAY/PAUSE (▶/II) on the remote control.
   "PROG." appears in the display window.

To check program contents

Press PROGRAM/MEMO on the remote control on the stop mode.
- A Track and program number will be displayed.

To clear program contents

Press PROGRAM/MEMO on the remote control on the stop mode. And then press CLEAR on the front panel or CD STOP(■) on the remote control.

To add program contents

1. Press PROGRAM/MEMO on the remote control repeatedly on the program stop mode until "Track Number" blinks.
2. Repeat 2~4 on above.

To modify program contents

1. Press PROGRAM/MEMO on the remote control to display program number you want to modify.
2. Repeat 2~4 on above.

About MP3

- An MP3 file is audio data compressed by using the MPEG1 audio layer-3 file-coding scheme. We call files that have the ".mp3" file extension "MP3 files".
- The unit can not read an MP3 file that has not ".mp3" file extension.

MP3 Disc compatibility with this unit is limited as follows:

1. Sampling Frequency / 8 - 48kHz
2. Bit rate / 8 - 320kbps
3. CD-R physical format should be "ISO 9660"
4. If you record MP3 files using the software which cannot create a FILE SYSTEM, for example "Direct-CD" etc., it is impossible to playback MP3 files. We recommend that you use "Easy-CD Creator", which creates an ISO9660 file system.
5. File names should be named using 30 letters or less and must incorporate ".mp3" extension e.g. "********.MP3".
6. Do not use special letters such as "/ : * ? " < > " etc.
7. Even if the total number of files on the disc have more than 1000, it will only be shown up to 999.

About MULTI SESSION

- This function recognizes the multi session disc according to a disc of CD-ROM type.
  ex) If there are MP3 files in the first session, the MP3 file in the first session is only played.
  If there are only MP3 files in the whole session, all of the MP3 files in the session are played.
  If there is Audio CD in the first session, only the Audio CD in the first session is played.

4 Maintenance and Service

Shipping the Unit

The original shipping carton and packing materials can come in handy. For maximum protection, re-pack the unit as it was originally packed at the factory if you need to ship it.

Cleaning the Unit

Use a soft, dry cloth when cleaning the player. If the surfaces are extremely dirty, use a soft cloth lightly moistened with a mild detergent solution.

Never use strong solvents, such as alcohol, benzine, or paint thinner. These might damage the surface of the unit.
Do not use volatile liquids, such as insecticide spray, near the unit. Do not leave rubber or plastic products in contact with the unit for a long period of time. They will leave marks on the surface.

Cleaning discs

Fingerprints and dust on the disc can cause poor picture quality and sound distortion. Before playing, clean the disc with a clean cloth. Wipe the disc from the center out.

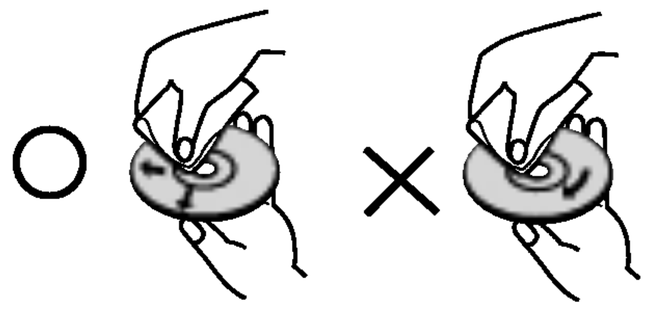

Do not use strong solvents such as alcohol, benzine, thinner, commercially available cleaners, or anti-static spray intended for older vinyl records.

Service

Use the table on the following page to solve any problems before calling for service.

Troubleshooting

Symptom	Cause	Correction
No power.	• The power cord is disconnected.	• Plug the power cord into the wall outlet securely.
No sound.	• The audio cables are not connected securely.	• Connect the audio cable into the jacks securely.
	• The power of the external source equipment is switched off.	• Switch on the external source equipment.
The unit does not start playback.	• No disc or tape is inserted.	• Insert a disc or tape.
	• An unplayable disc or tape is inserted.	• Insert a playable disc or tape.
	• The disc is placed upside down.	• Place the disc with the playback side down.
	• The disc is not placed within the guide.	• Place the disc on the disc tray correctly inside the guide.
	• The disc is dirty.	• Clean the disc.
The remote control does not work properly.	• The remote control is not pointed at the remote sensor of the unit.	• Point the remote control at the remote sensor of the unit.
	• The remote control is too far from the unit.	• Operate the remote control within about 23 ft (7 m).
	• There is an obstacle in the path of the remote control and the unit.	• Remove the obstacle.
	• The batteries in the remote control are exhausted.	• Replace the batteries with new ones.

5 Reference

Specifications

SECTION		MODEL	LX-M240A/D/X LX-M241A/D/X	LX-M340A/D/X LX-M341A/D/X
[General]		Power supply	Refer to the back panel of the unit.	
		Power consumption	50W	65W
		Mass	4.36kg	4.56kg
		External dimensions (WxHxD)	161 X 255 X 268mm	
[CD]		Frequency response	40 - 18000 Hz	
		Signal-to-noise ratio	70 dB	
		Dynamic range	70 dB	
[Tuner]	FM	Tuning Range	87.5 - 108.0 MHz or 65 - 74 MHz, 87.5 - 108.0 MHz	
		Intermediate Frequency	10.7 MHz	
		Signal to Noise Ratio	60/55 dB	
		Frequency Response	60 - 10000 Hz	
	AM (MW)	Tuning Range	522 - 1611 kHz or 530 - 1610 kHz	
		Intermediate Frequency	450 kHz	
		Signal to Noise Ratio	35 dB	
		Frequency Response	100 - 1800 Hz	
[Amp]		Output Power	20W + 20W	30W + 30W
		T.H.D	0.15%	
		Frequency Response	40 - 25000 Hz	
		Signal-to-noise ratio	80 dB	
[TAPE]		Tape Speed	3000 + 3% (MTT-111. NORMAL-SPEED)	
		Wow Flutter	0.25% (MTT -111, JIS-WTD)	
		F.F/REW Time	120sec (C-60)	
		Frequency Response	250 - 8000Hz	
		Signal to Noise Ratio	43dB(P/B)/43dB(R/P)	
		Channel Separation	50dB(P/B)/45dB(R/P)	
		Erase Ratio	55dB (MTT-5511)	
[Speakers]			**LXS-M240/LXS-M241**	**LXS-M340/LXS-M341**
		Type	2 Way 2 Speaker	2 Way 2 Speaker
		Impedance	6 Ω	6 Ω
		Frequency Response	75 - 20000 Hz	70 - 20000 Hz
		Sound Pressure Level	87 dB/W (1m)	87 dB/W (1m)
		Rated Input Power	20 W	30 W
		Max. Input Power	40 W	60 W
		Net Dimensions (WxHxD)	160x247x197mm	160x247x230mm
		Net Weight (1EA)	2.3kg	2.5kg

✻ Designs and specifications are subject to change without notice.



P/NO : 3834RH0020D