LG

Upright Vacuum Cleaner
Owner's Manual

MODEL: VUP153NJP

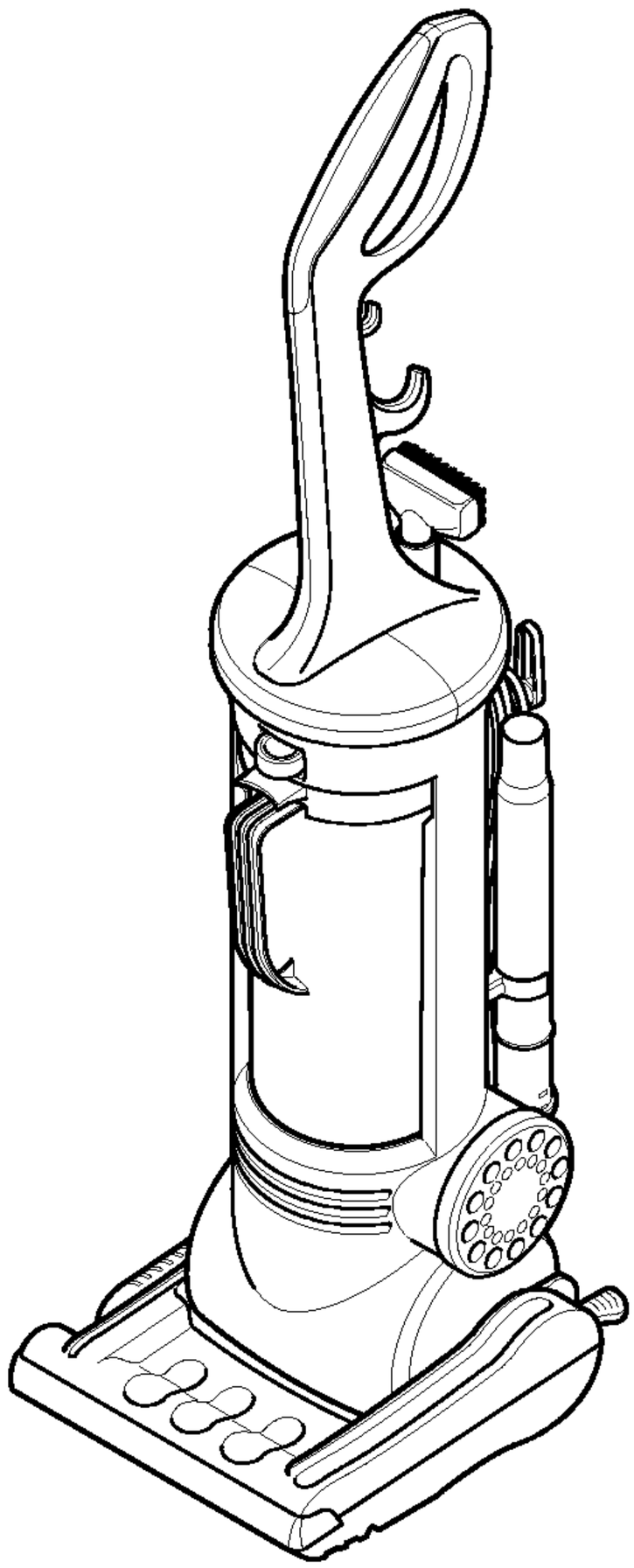

PLEASE READ THIS MANUAL THOROUGHLY AND CAREFULLY BEFORE OPERATING THE VACUUM CLEANER

P/No.: 3828FI5872H

TABLE OF CONTENTS

IMPORTANT SAFEGUARDS 3

ASSEMBLING THE VACUUM CLEANER 5

- STEP 1: UNPACKING THE UNIT 5
- STEP 2: ASSEMBLING THE HANDLE 6
- STEP 3: CORD STORAGE 6
- STEP 4: ATTACHING THE TOOLS 6

CLEANER DESCRIPTION 8

SPECIAL FEATURES 9

MOTOR PROTECTOR 9

OPERATION 10

- Important Safety Tips 10
- On/Off Switch 10
- Handle Positions 10
- Transporting the Vacuum Cleaner 11
- Using the Cord Hanger 11
- Using the Cord Hook 11
- Using Attachments 12

CLEANING AND MAINTENANCE 13

- Clearing Blockages 13
- Pre-motor Filter 14
- Exhaust Filter 15
- Removing/Installing the Bottom Plate 15
- Replacing the Belt and/or Agitator 16
- Cleaning the Agitator 17

SPECIFICATIONS 17

PARTS 17

BEFORE REQUESTING SERVICE 18

IMPORTANT SAFEGUARDS

WARNING

Your safety is important to us. To reduce the risk of fire, electrical shock, injury to persons, or damage when using your vacuum cleaner, please follow these basic safety precautions.

1. **Disconnect** power supply before cleaning the unit.
2. **Do not** leave appliance plugged in. Unplug from the socket when not in use.
3. **Do not** use outdoors or on wet surfaces. Do not pick up water or wet materials.
4. **Do not** handle plug or appliance with wet hands.
5. **Do not** allow it to be used as a toy. Close attention is necessary when used by or near children.
6. **Use only** as described in this manual. Use only attachments recommended by the manufacturer.
7. **Do not** use with a damaged cord or plug. If the supply cord is damaged, it must be replaced by the manufacturer or an Authorised Service Centre or a similarly qualified person in order to avoid a hazard.
8. **Do not** pull or carry by the power cord as a handle, close door on cord, or pull the cord around sharp edges or corners. Do not run appliance over the cord. Keep the cord away from heated surfaces.
9. **Do not** unplug by pulling the cord. To unplug, grasp the plug, not the cord.
10. **Do not** put any object into openings. Do not use with any opening blocked. Keep free from dust, lint, hair, and anything that might reduce air flow.
11. **Keep** hair, loose clothing, fingers, and all parts of the body away from the openings and moving parts.
12. **Do not** use vacuum cleaner to pick up sharp, hard objects, small toys, pins, etc.
13. **Do not** use to pick up anythng that is burning or smoking, such as cigarettes, matches, or hot ashes.
14. **Do not** pick up flammable or combustible liquid or vapour such as gasoline or use in areas where they may exist.
15. **Do not** use vacuum cleaner without dust container and/or filters in place.
16. **Always** turn off all controls before unplugging.
17. **Do not** keep vacuum cleaner on chairs, tables, etc. Extra care must be taken when cleaning stairs.
18. **Always** unplug the unit or turn off the switch when the unit stops unexpectedly. If you don't, the cleaner could re-start unintentionally.

Thermal protector: This vacuum cleaner has a special thermostat that protects the cleaner in case of motor overheating. If the cleaner suddenly shuts off, turn off the switch and **unplug** the cleaner. Check the cleaner for a possible source of overheating such as a full dust container, a blocked hose or clogged filter. If these conditions are found, fix them and wait at least 30 minutes before attempting to use the cleaner. After the 30 minutes period, plug the cleaner back in and turn on the switch. If the cleaner still does not run, contact a qualified electrician.

SAVE THESE INSTRUCTIONS

THIS PRODUCT IS FOR HOUSEHOLD USE ONLY

IMPORTANT SAFEGUARDS

Important information for users in the UK:
The wires in the mains lead of this appliance are coloured in accordance with the following code:

BLUE - neutral **BROWN - live**
The colours of the wires in the mains lead of this appliance may not correspond with the coloured makings identifying the terminals in your plug.

PROCEED AS FOLLOWS:
The wire which is coloured **BROWN** must be connected to the terminal which is marked L or coloured **RED**.
The wire which is coloured **BLUE** must be connected to the terminal which is marked **N** or coloured **BLACK**.

VERY IMPORTANT:
Neither wire is to be connected to the earth terminal of a 3-pin plug If a 13 amp plug is fitted, fit a 13 amp BS 1362 fuse. If any other type of plug is used, protect with a 15 amp fuse at the distribution board.

For appliances which come with a mains lead and plug moulded on; the plug moulded on to the cord incorporates a fuse.

For replacement, use a 13 amp BS 1362 fuse.

Only ASTA approved or certified fuses should be used.

The fuse cover/carrier must be replaced in the even of changing the fuse.

The plug must not be used if the fuse cover/carrier is lost. A replacement cover/carrier must be obtained from authorised electrical goods retailers.

WARNING! Should it become necessary to replace the moulded-on plug then the defective plug should be destroyed to avoid any possible shock hazard that could occur should such a plug be inserted into a 13 amp socket elsewhere in the house. Please remove the fuse from the old plug.

ASSEMBLING THE CLEANER

WARNING

Electrical Shock Hazard

Do not plug into the electrical supply until assembly is complete.
Failure to do so could result in electrical shock or injury.

STEP 1: UNPACKING THE CARTON

Remove all parts from the carton and use the figure below to identify each part.

Make sure that you have removed all parts before disposing of the carton and packing materials.

Plug shape:

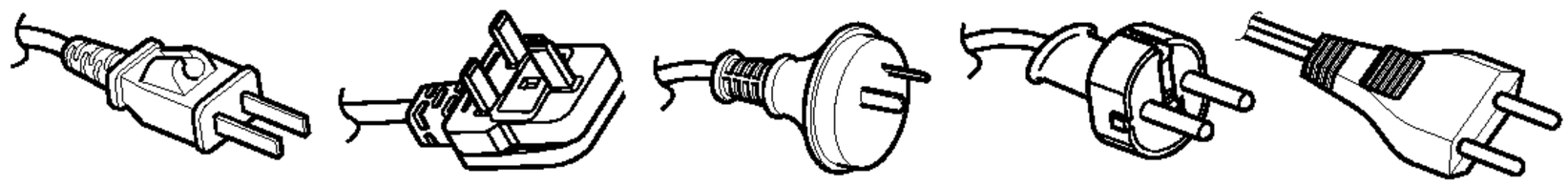

US/CANADA UK AUSTRALIA EC

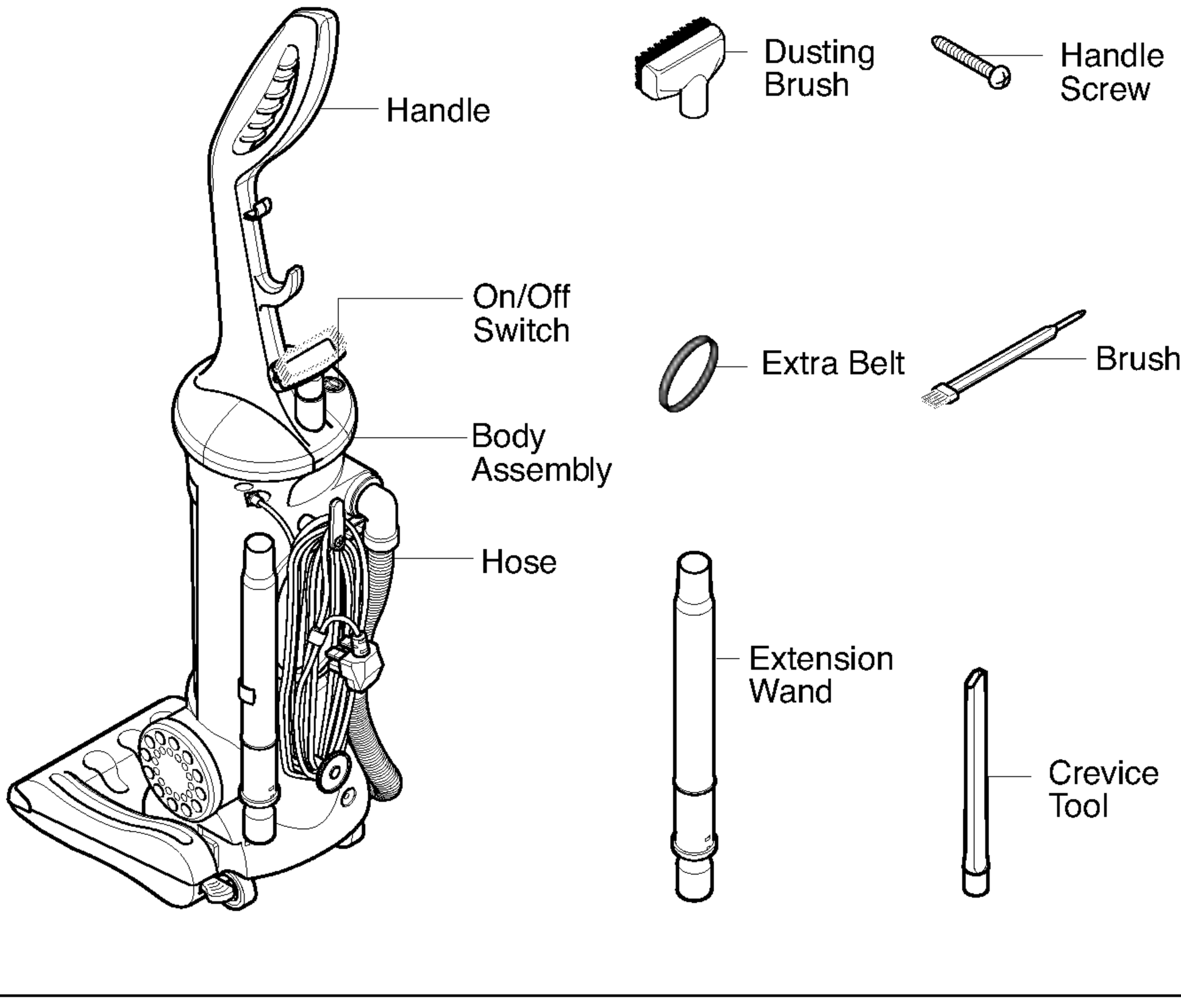

ASSEMBLING THE CLEANER

STEP 2: ASSEMBLING THE HANDLE

Slide the handle into the opening at the back of the vacuum cleaner body (Fig. A)

Insert the screw into the handle screw hole and tighten with a screwdriver. (Fig. B)

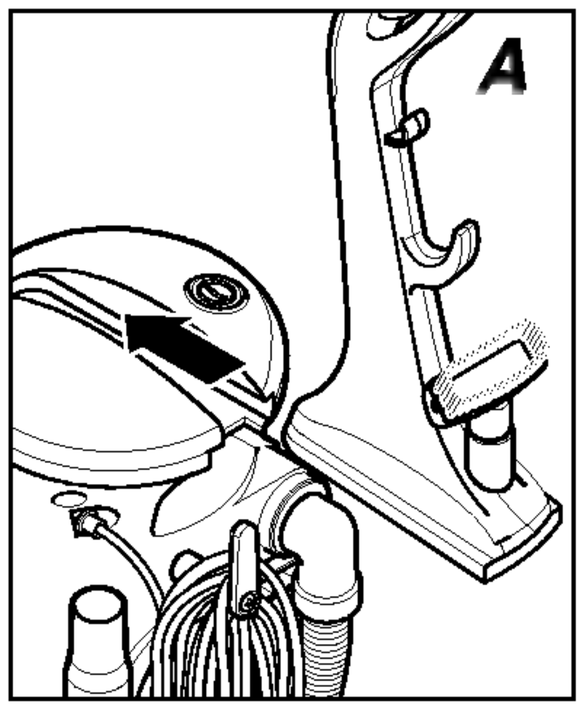

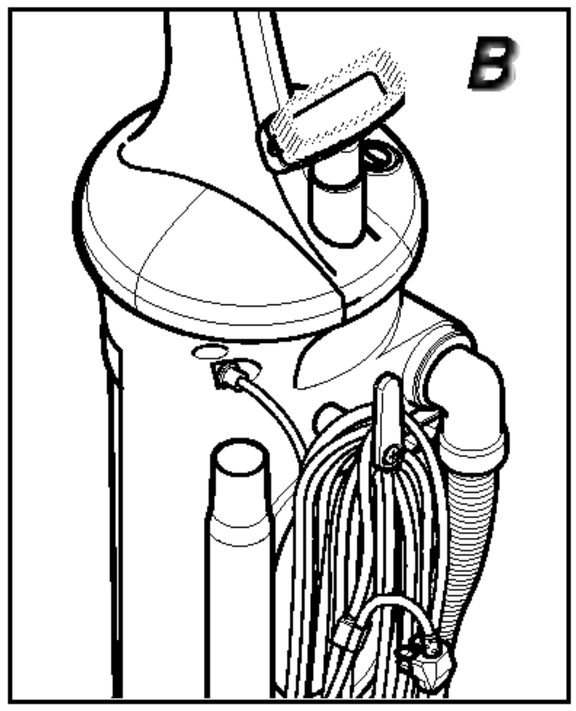

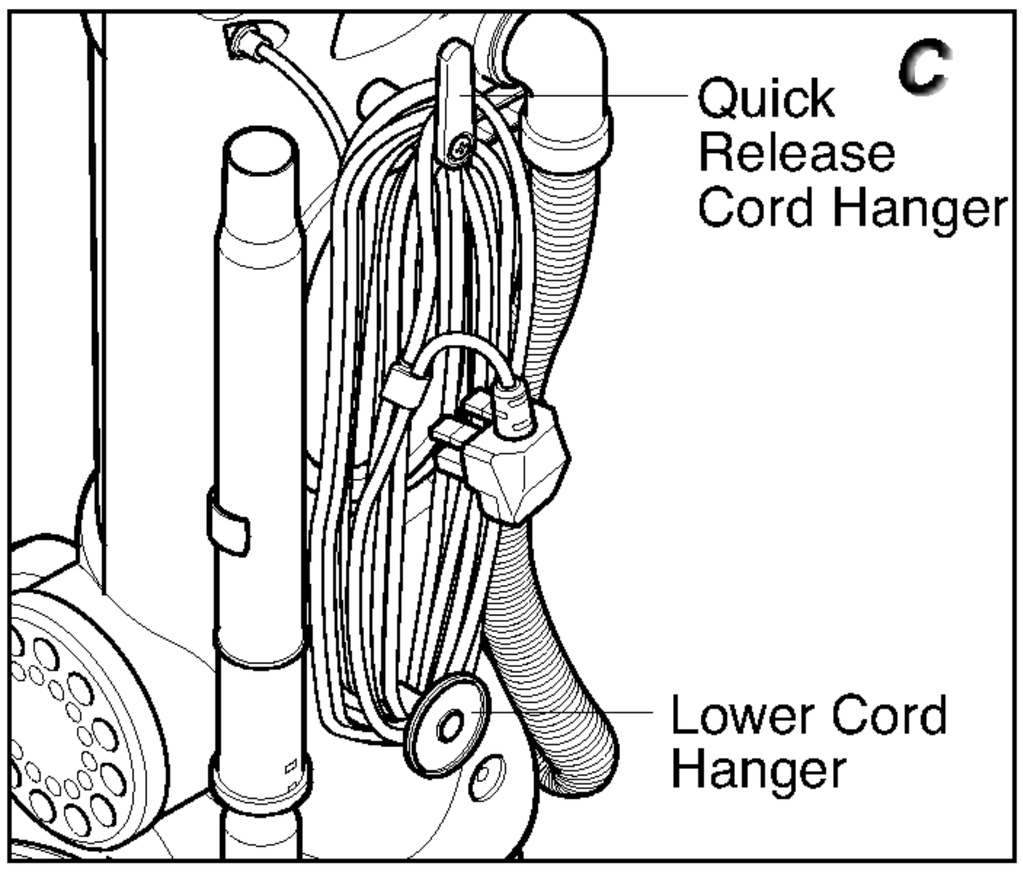

STEP 3: CORD STORAGE

Make sure that the quick-release cord hanger is in the upright position.

Wrap the cord around the quick-release cord hanger and lower cord hanger. (Fig. C)

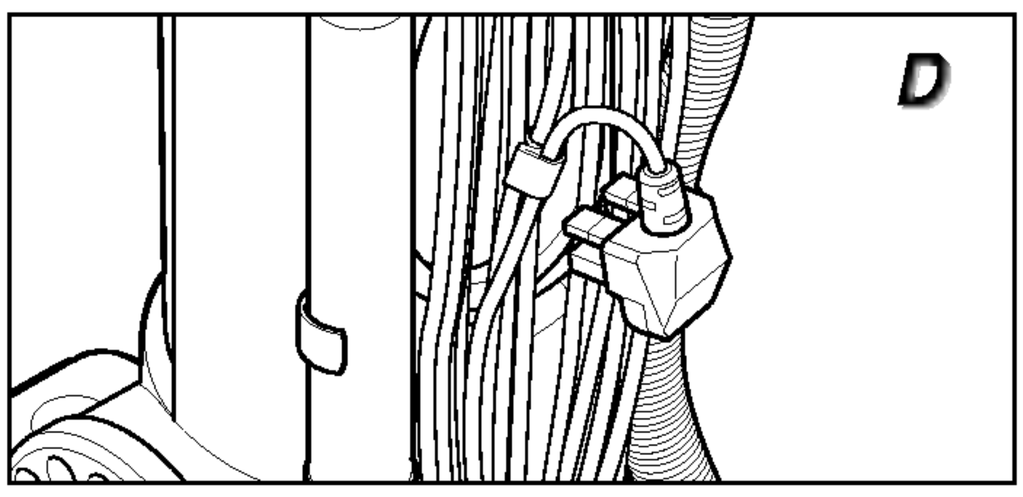

Clip the power cord plug onto the power cord.(Fig. D)

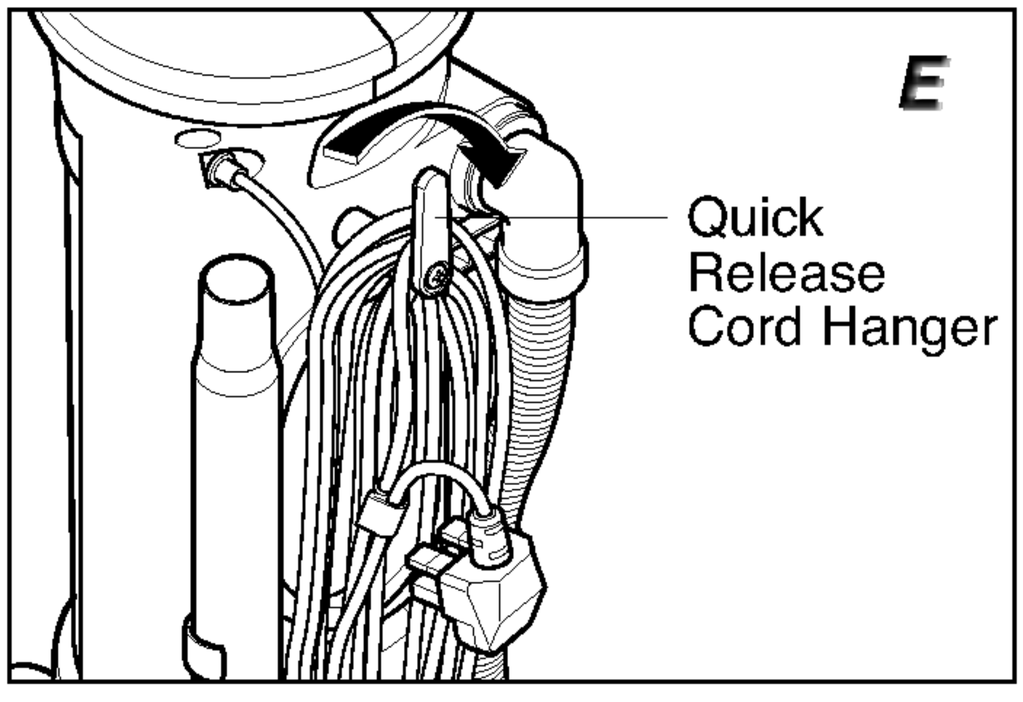

To release the cord, rotate the quick-release cord hanger downward. (Fig. E)

ASSEMBLING THE CLEANER

WARNING

Electrical Shock Hazard

Do not plug into the electrical supply until assembly is complete.
Failure to do so could result in electrical shock or injury.

STEP 4: ATTACHING THE TOOLS

Store the crevice tool and dusting brush in the clip at the bottom of the handle.

Clip the extension wand into place on the left side of the vacuum cleaner.

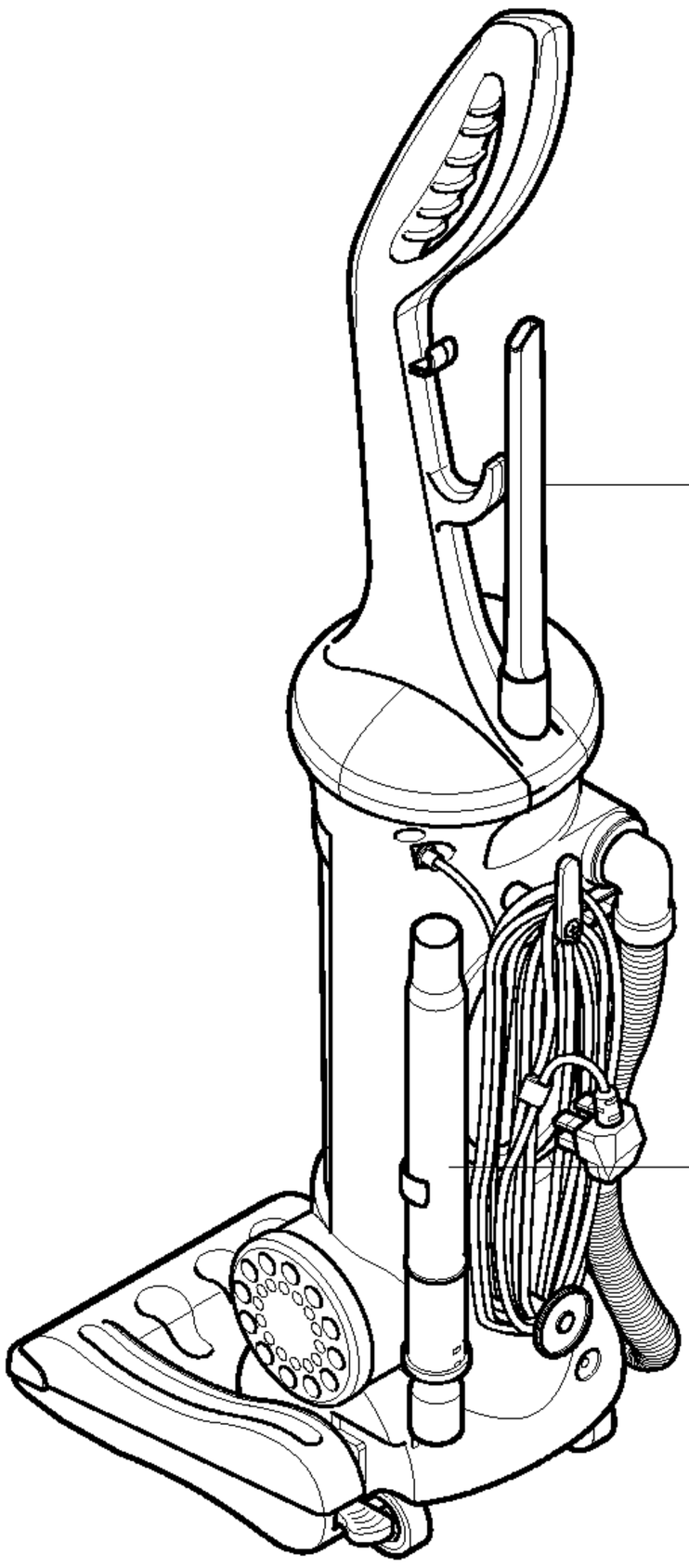

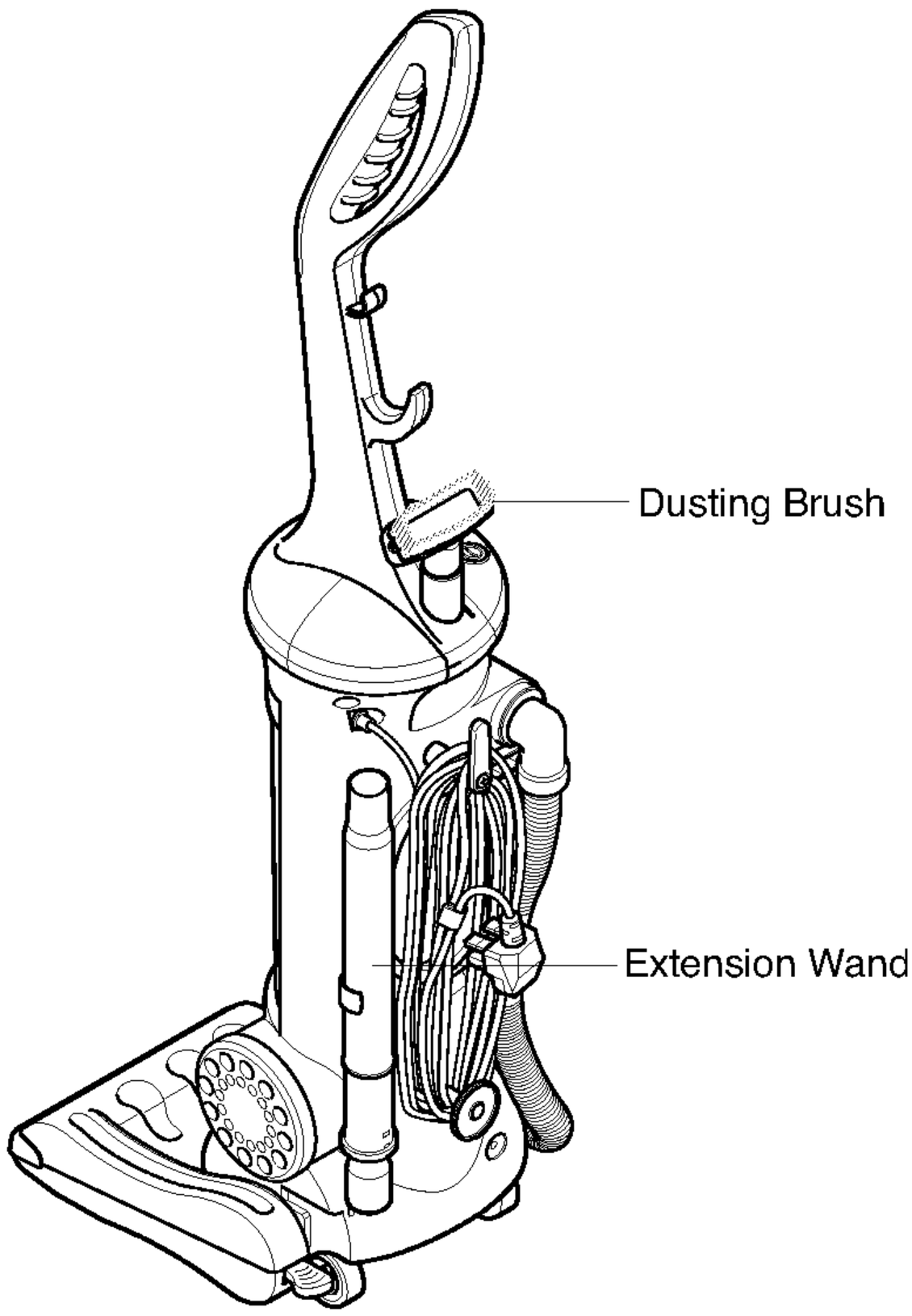

CLEANER DESCRIPTION

After assembly, the vacuum cleaner will look like the picture below.

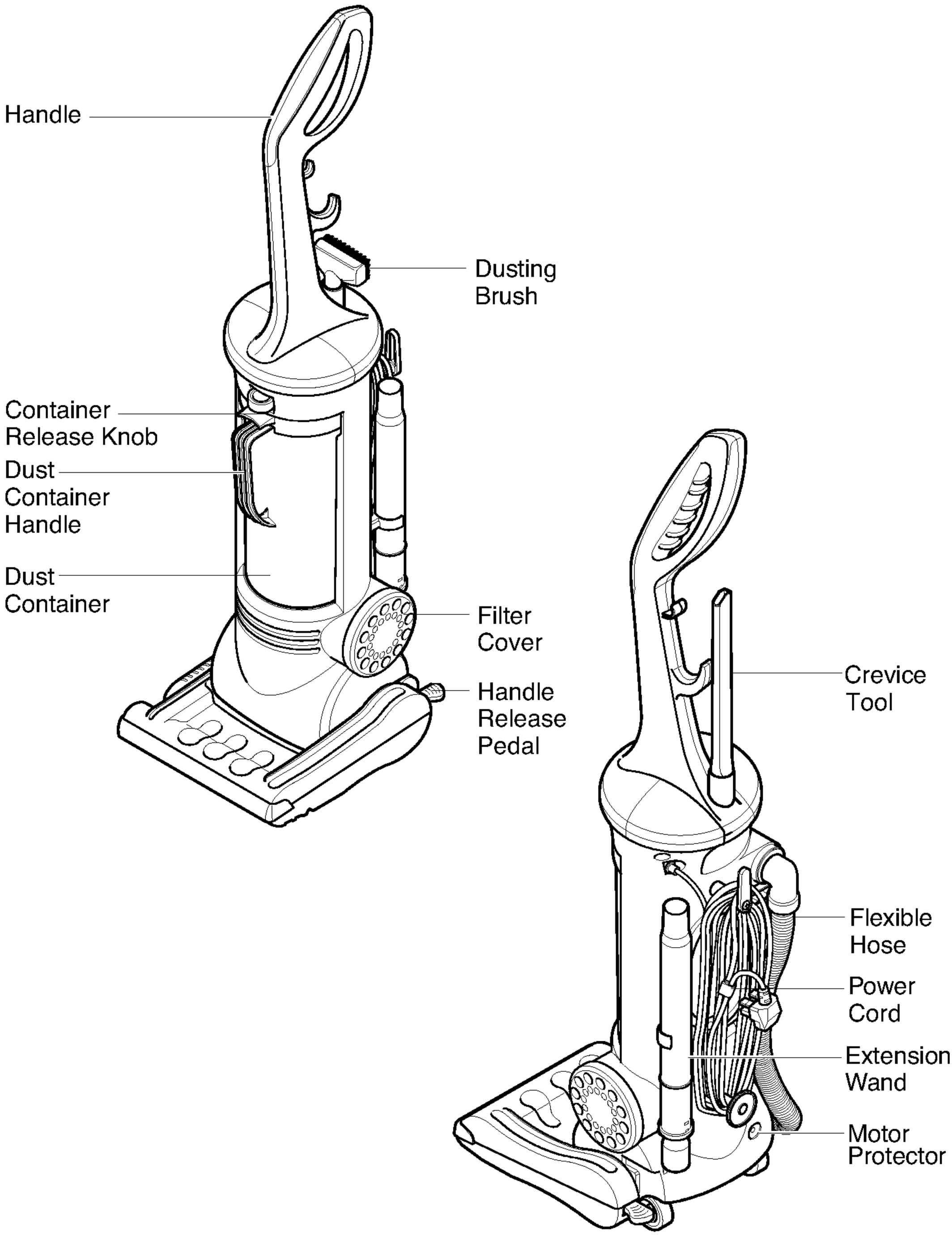

SPECIAL FEATURES

EDGE CLEANING FEATURE

The edge cleaning feature provides improved cleaning of carpets along walls and furniture.

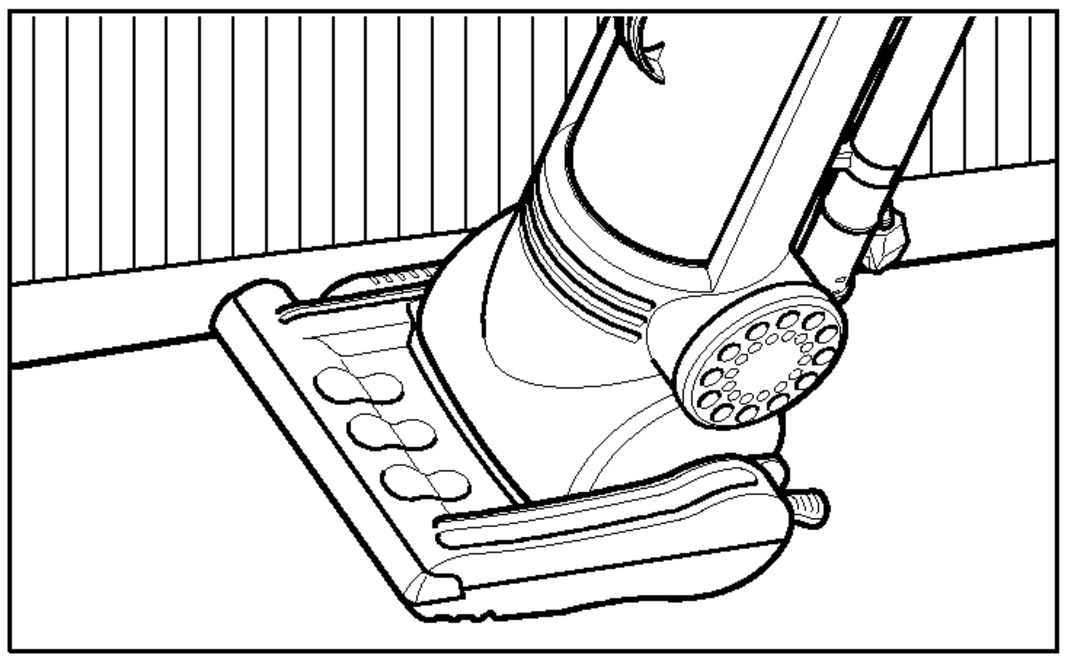

MOTOR PROTECTOR

This vacuum has a motor protector by-pass valve which automatically opens to provide cooling air to the motor when a clog prevents the normal flow of air. If the by-pass valve opens to prevent motor overheating and possible damage to the vacuum, a change of sound will be noticed as air rushes through the valve opening. If this occurs, turn the vacuum off and unplug the power cord from the outlet. Then check for blockage as described under the BLOCKAGE REMOVAL section.

The motor protector by-pass valve may open when using attachments or when cleaning new carpet, due to reduced air flow caused by the attachments themselves or by new carpet reduce filling the dust container quickly.

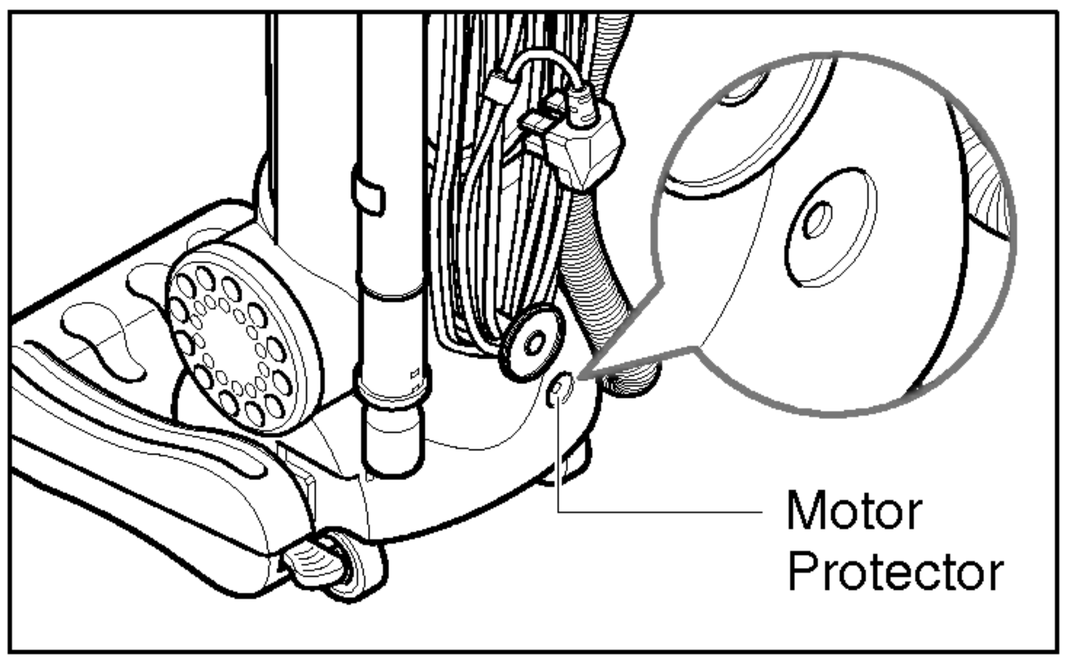

OPERATION

WARNING

Personal Injury and Product Damage Hazard

- DO NOT use outlets above work surfaces. Damage to items in the surrounding area could occur.

IMPORTANT SAFETY TIPS

Before you plug in your vacuum cleaner, make sure that the voltage indicated on the rating label of the vacuum cleaner matches that of your local electrical supply.

ON/OFF SWITCH

Plug in the power cord.

Press the ON/OFF switch to turn vacuum cleaner on or off.

If the cleaner stops unexpectedly, a
turn off the switch and unplug the v
cleaner before checking for the cau
vacuum cleaner could start on its o
cause injury.

HANDLE POSITIONS

The handle may be adjusted to any position required.

Depress the handle release pedal. The handle is then released to move up and down freely.

To clean under furniture, depress the handle release pedal a second time.

To store the vacuum or attachments, set the handle to the upright position.

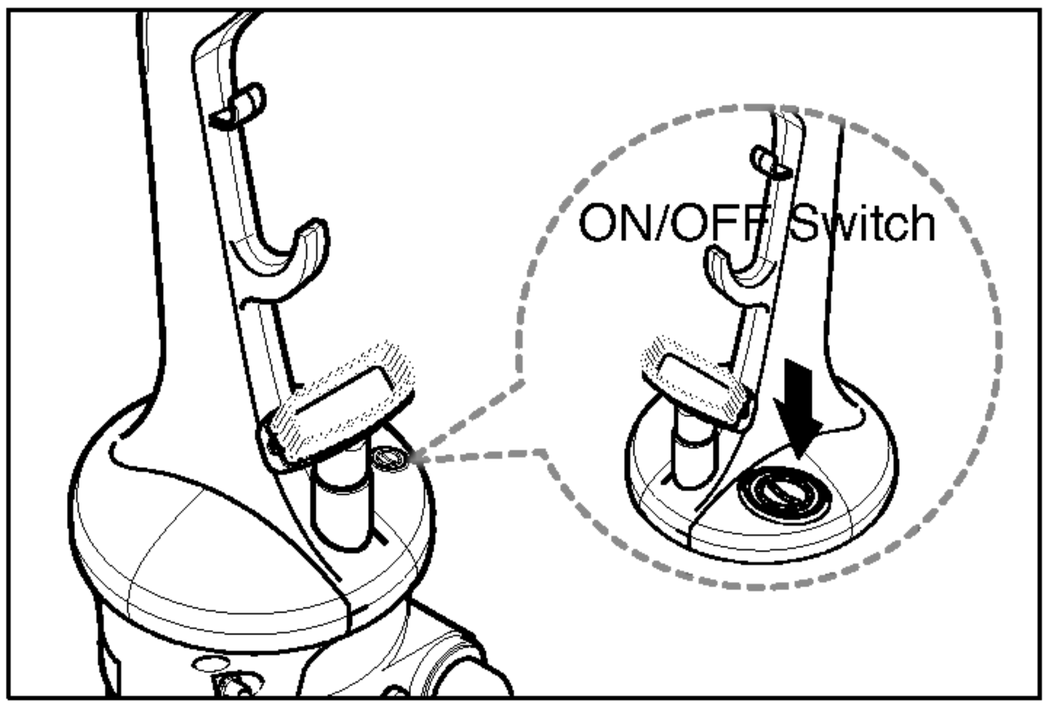

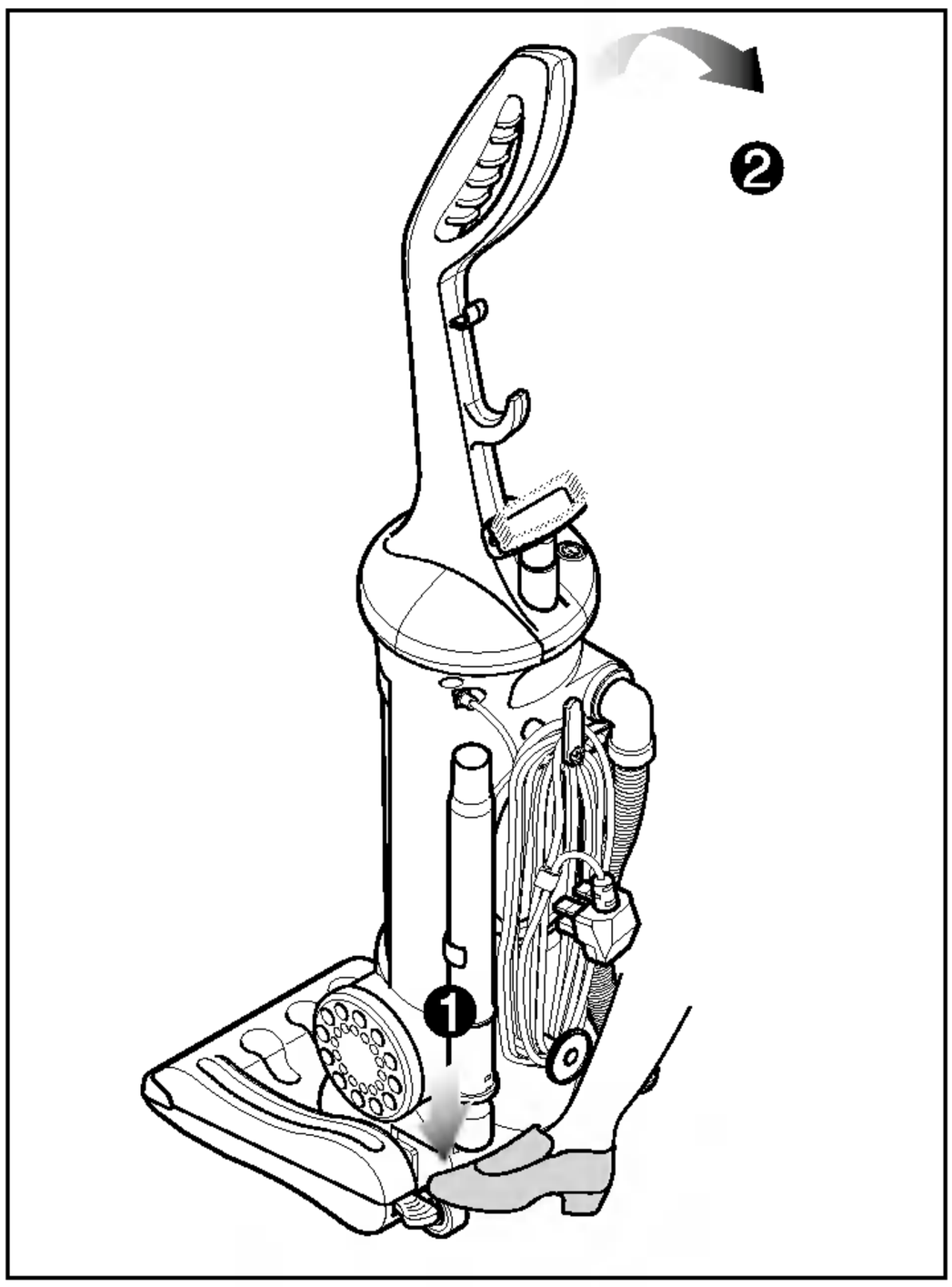

OPERATION

WARNING

Personal Injury and Product Damage Hazard

• DO NOT use outlets above work surfaces. Damage to items in the surrounding area could occur.

TRANSPORTING THE VACUUM CLEANER

To move your vacuum cleaner from room to room, place the handle in the upright position,

tilt the vacuum back on its rear wheels and push it forward.

The vacuum cleaner can also be picked up and carried using the built-in carrying handle.

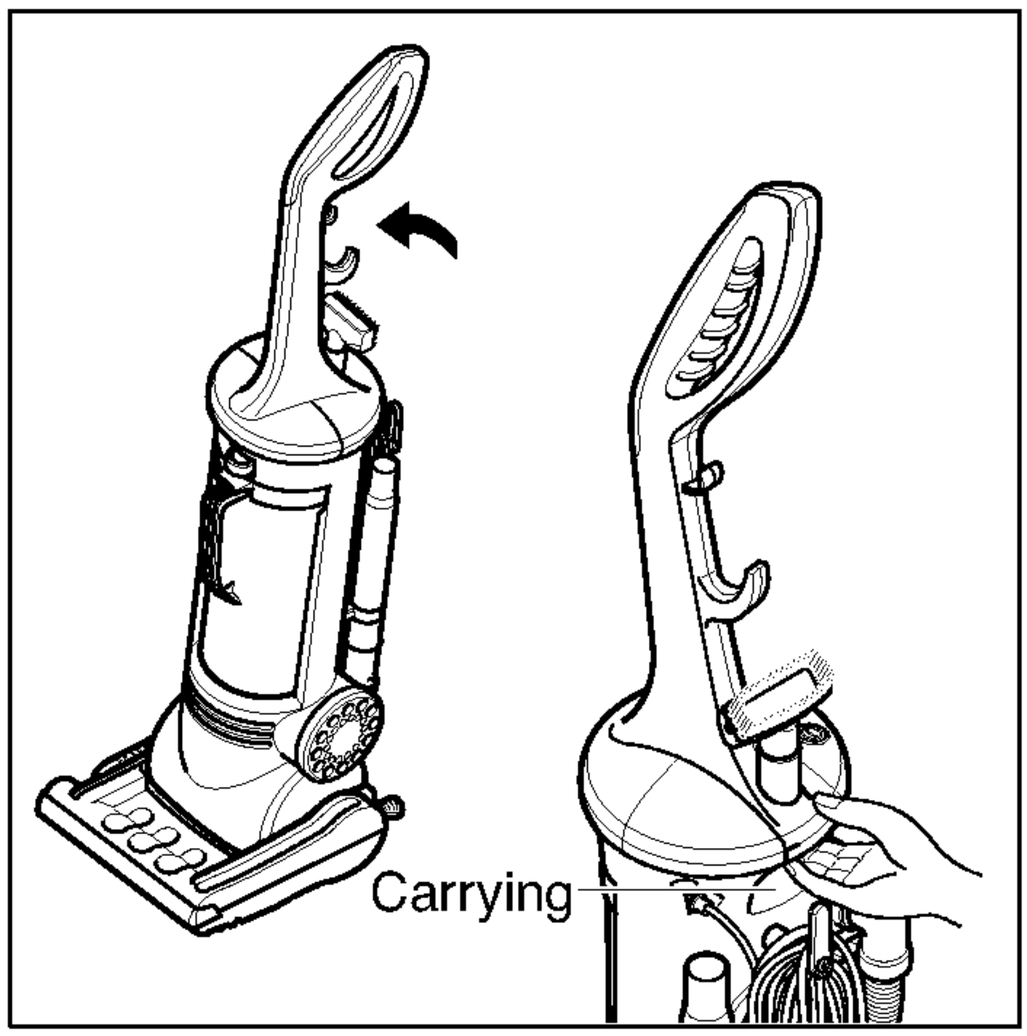

USING THE CORD HANGER

To release the power cord, rotate the quick release cord hanger downward and the entire power cord can be slid off the hanger for immediate use.

Do not unplug the cleaner by pulling on the cord. Always unplug by grasping the plug and pulling it straight out from the socket.

Return the quick release cord hanger to the upright position before rewinding and storing the power cord.

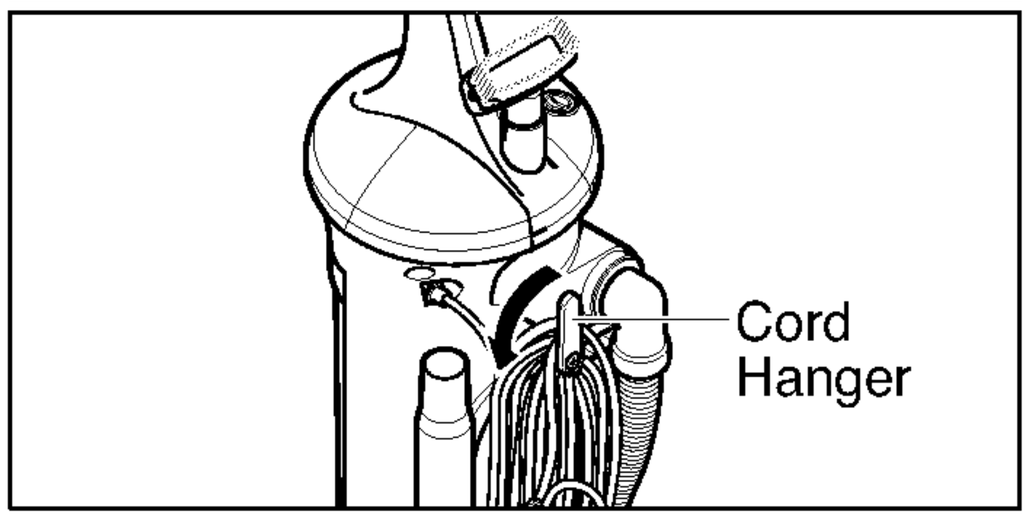

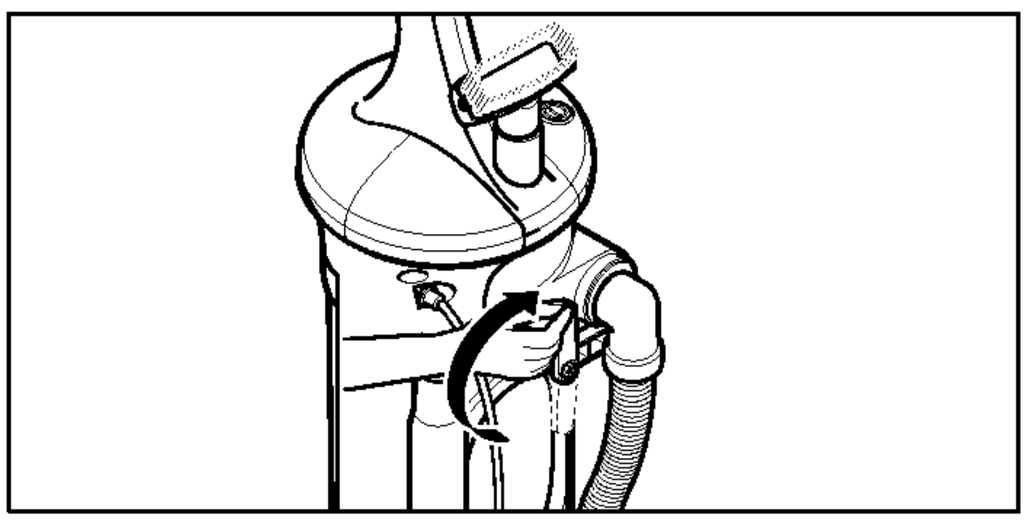

USING THE CORD HOOK

There is a groove on the handle to secure the power cord while you are vacuuming.

To help prevent possible damage to the power cord, clip it into this groove to help keep the power cord from hanging down where it can be caught up in the agitator or other moving parts.

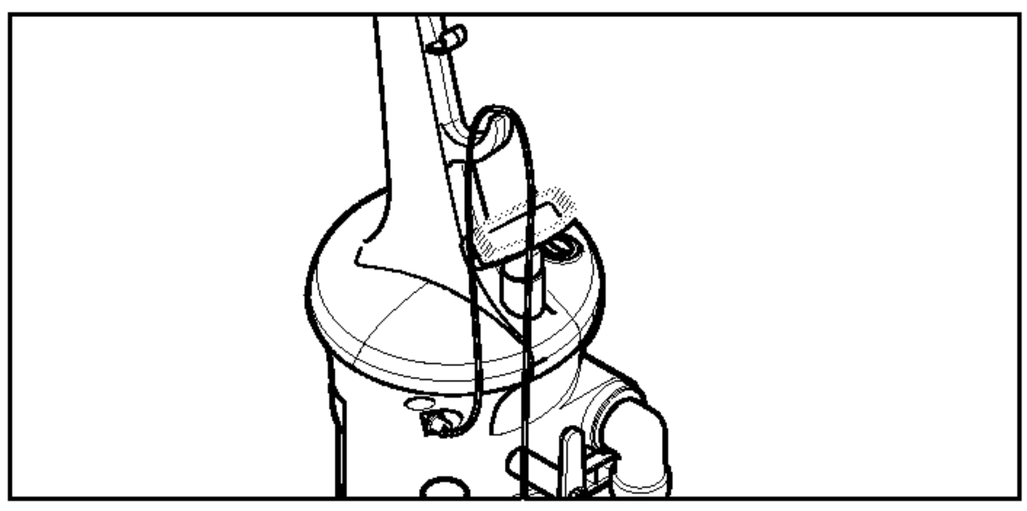

OPERATION

WARNING

Personal Injury and Product Damage Hazard

- DO NOT use outlets above work surfaces. Damage to items in the surrounding area could occur.

USING ATTACHMENTS

Remove the lower end of the flexible hose from the vacuum cleaner by pull the hose collar out of the clip on the base. (Fig. A)

Remove the telescopic extension wand from its storage position. (Fig. B)

Turn the lower extension wand to the UNLOCK position. (Fig. C)

Extend the wand to its full length. Turn the lower extension wand to the LOCK position. (Fig. C)

Slide the extension wand onto the hose collar.

Connect the crevice tool and dusting brush onto the end of the extension wand. (Fig. D)

The crevice tool or dusting brush will also fit directly onto the hose collar.

The dusting brush can also be used as an upholstery cleaning brush by removing the brush. (Fig. E)

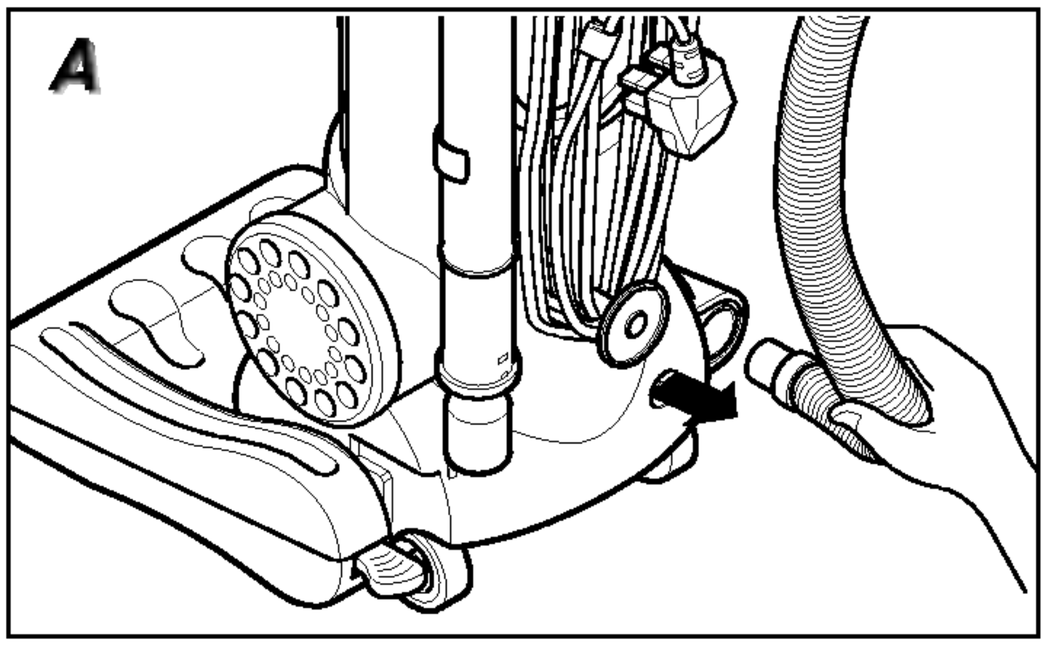

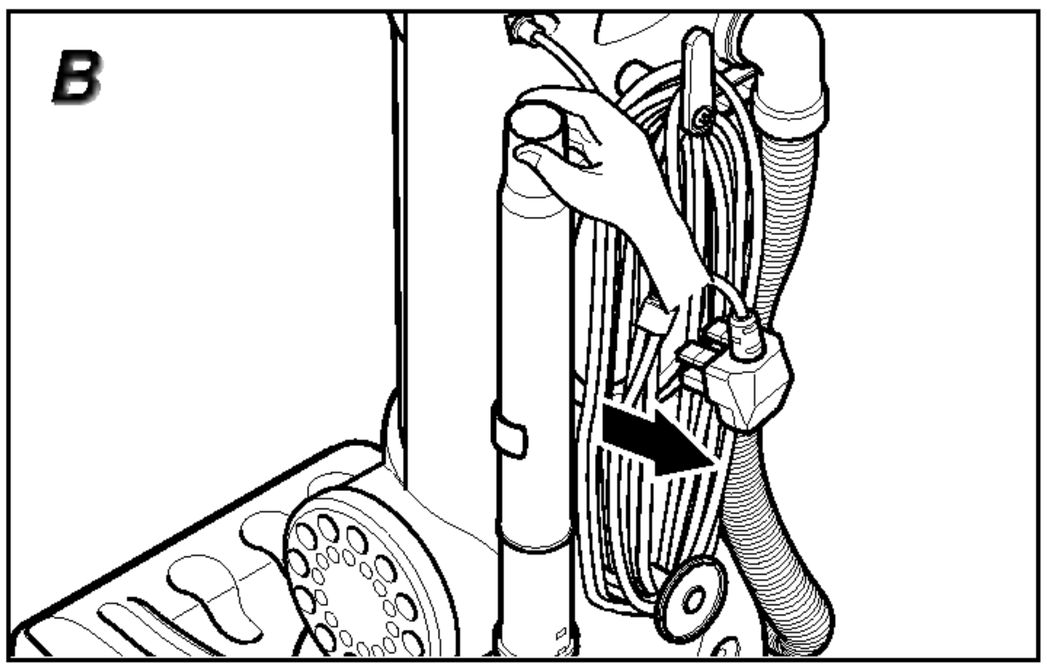

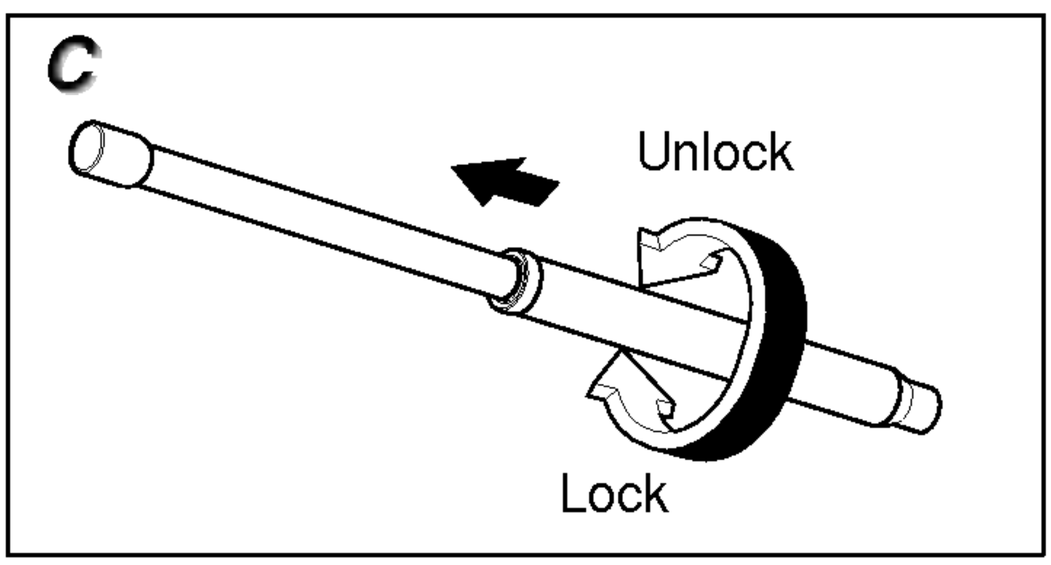

CAUTION

- When using attachments, be careful not to over-extend the hose. This could cause the cleaner to tip over.

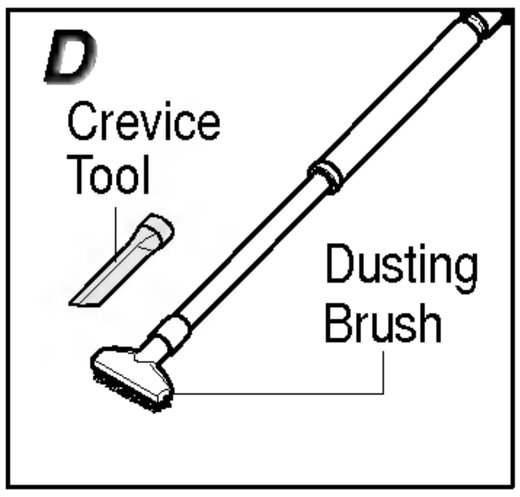

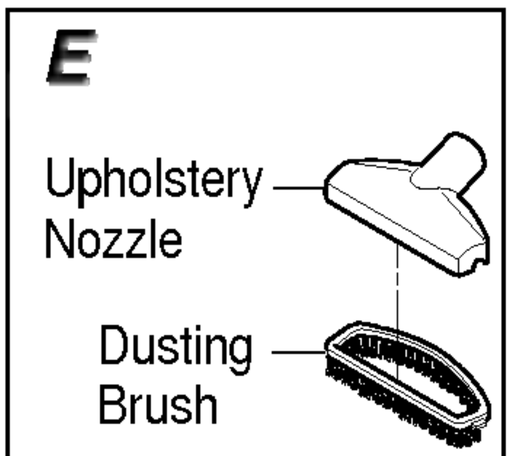

REMOVING CLOGS

WARNING

Electrical Shock and Personal Injury Hazard

- Unplug the vacuum cleaner before cleaning the unit. Failure to do so could result in electrical shock or personal injury from the vacuum cleaner starting unexpectedly.

If your vacuum cleaner makes a strange noise or suction decreases, check for blockages or whether the pre-motor filter is dirty.

REMOVING BLOCKAGES

First check the hose and extension wand. Visually inspect the hose and the opening of the vacuum cleaner body into which the hose is inserted. (Fig. A)

Remove the dust container and check the pre-motor filter. (See page 15)

Check the dust inlet on the vacuum cleaner body for blockages. (Fig. B)

If the blockage remains, turn the vacuum cleaner over and check the agitator area and suction inlet. (Fig. C)

Stand the vacuum cleaner back up in an upright position before plugging into the electrical outlet.

A

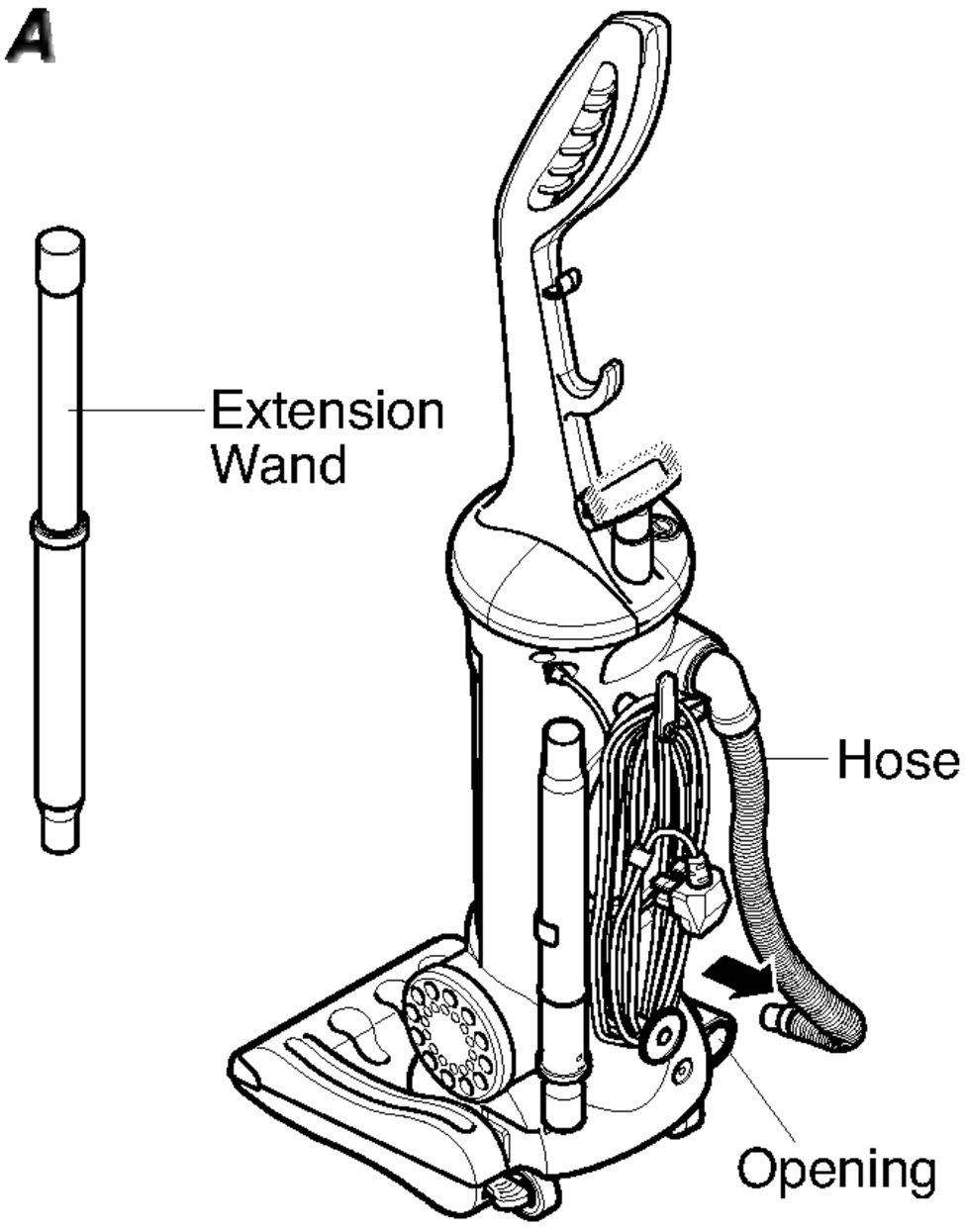

B

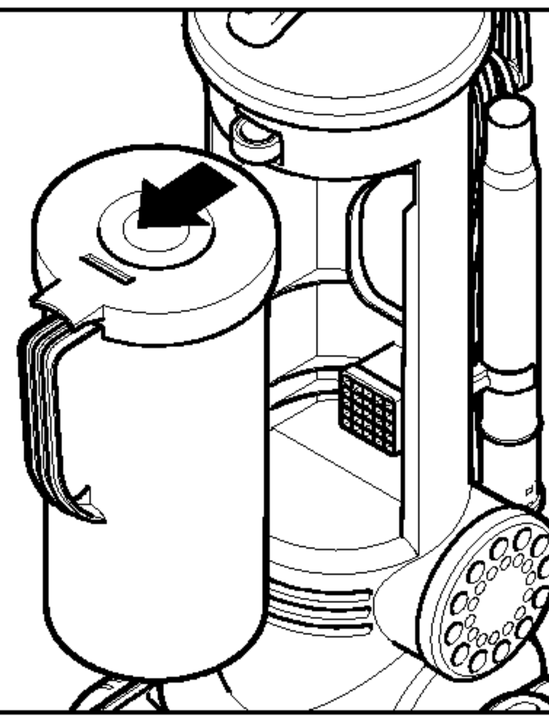

C

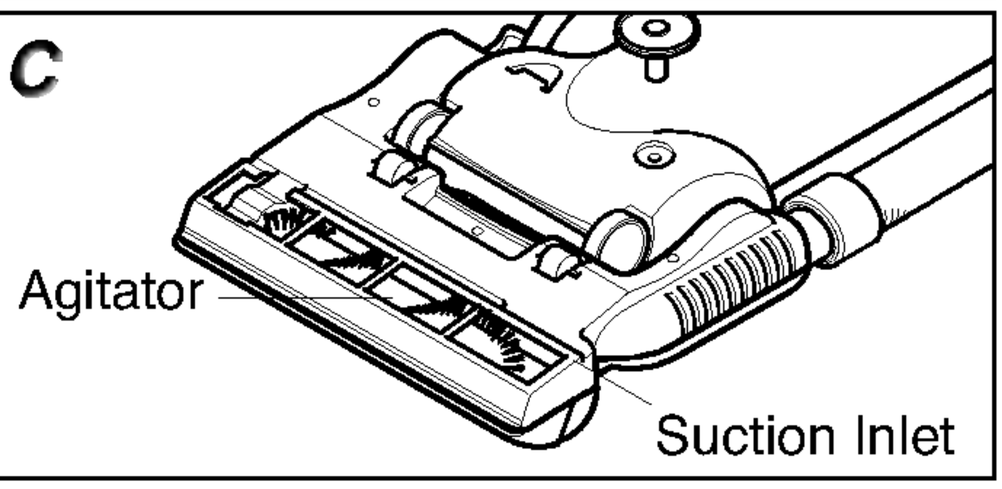

REMOVING CLOGS

WARNING

Electrical Shock and Personal Injury Hazard

- Unplug the vacuum cleaner before cleaning the unit. Failure to do so could result in electrical shock or personal injury from the vacuum cleaner starting unexpectedly.

PRE-MOTOR FILTER

Check and clean the pre-motor filter regularly.

If the motor pre-filter is covered with too much dust, vacuum cleaner will stop moving as the thermal protect work.

You should also check the pre-motor filter whenever the vacuum cleaner makes a strange noise or suction decreases.

First, turn off the vacuum cleaner and unplug the power cord from the electrical outlet.

Remove the dust container by pushing the release button and pulling out on the dust container handle. (Fig. A)

Remove the cover and empty the container. (Fig. B)

Clean the pre-motor filter (on the dust container cover) by tapping it gently. (Fig. C)

If the pre-motor filter is excessively dirty, rinse the filter with water.

Easy to rinsing, separate pre-motor filter from the filter cap. (Fig. D,E)

After rinsing, allow the pre-motor filter to dry in a shaded location for 24 hours. **Never reinstall the pre-motor filter while it is wet.**

Before reinstalling the dust container, make sure that the cover is positioned properly.

To reinstall the dust container, hook the bottom of the container onto the lower part of the handle and push the top of the dust container into the handle until it latches in place. (Fig. F)

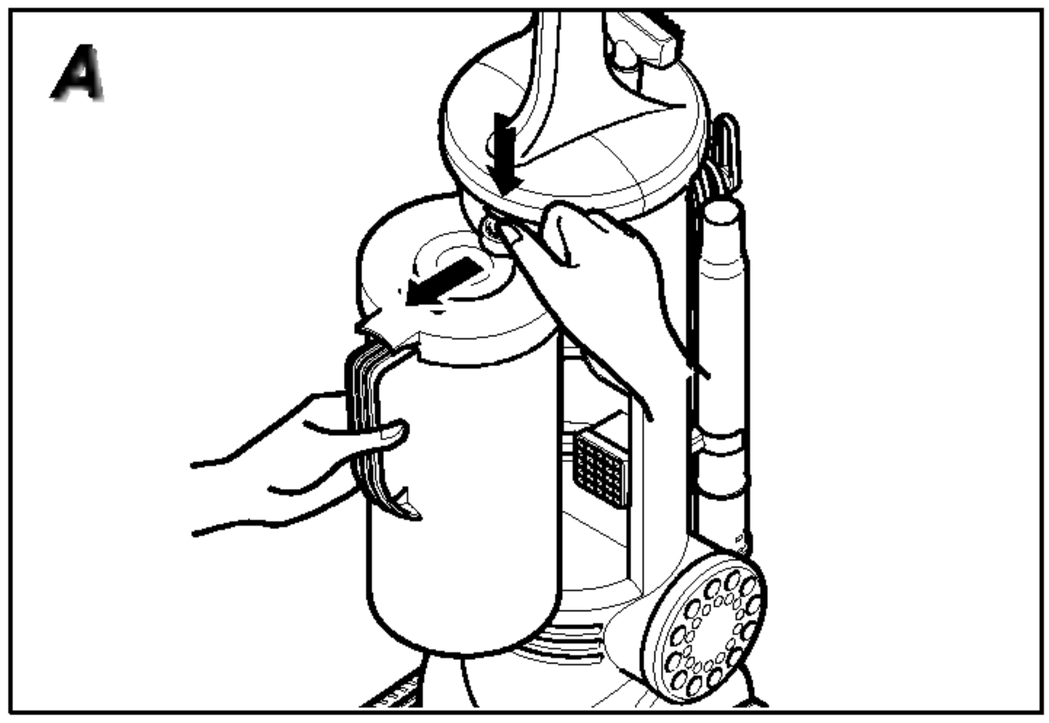

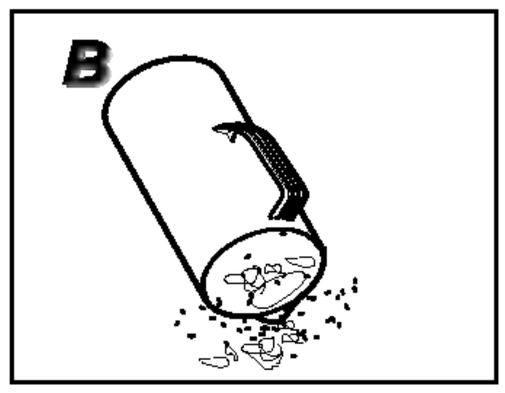

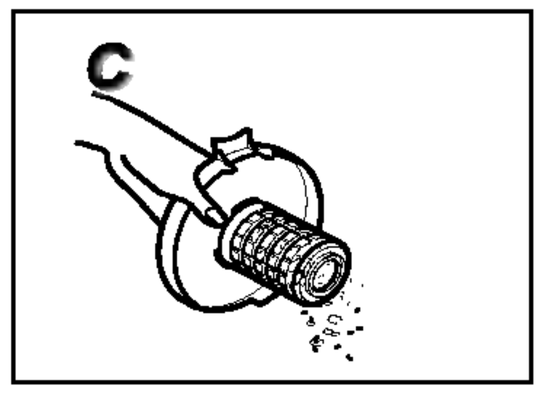

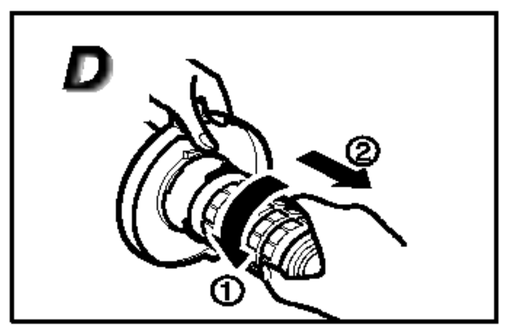

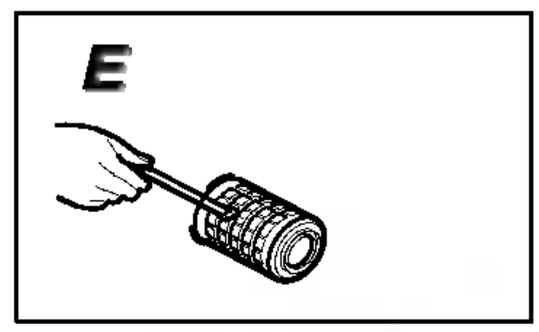

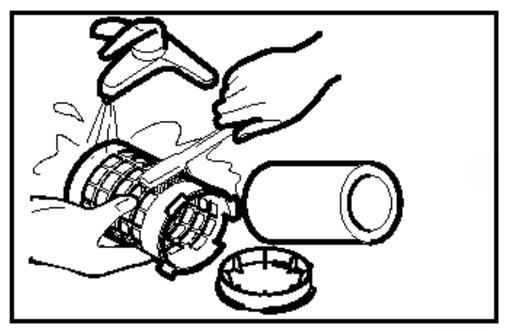

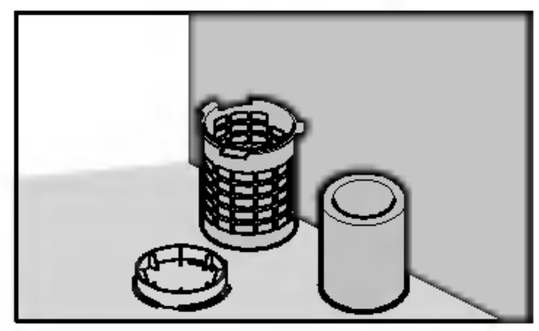

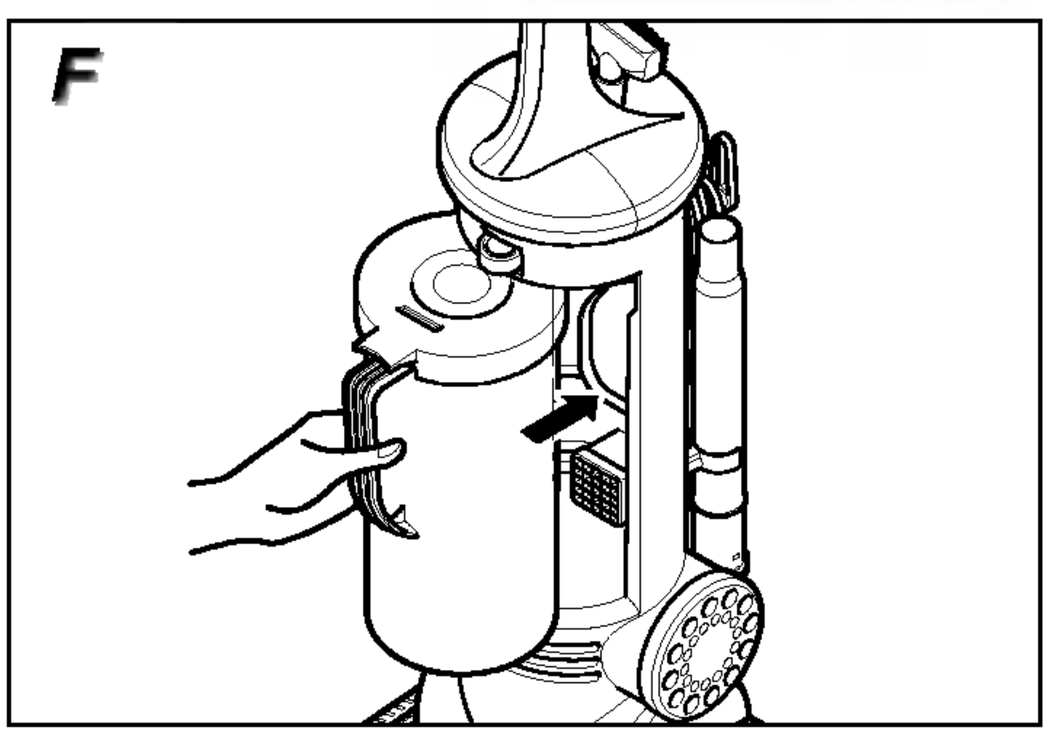

REPLACEMENT INSTRUCTIONS

WARNING

Electrical Shock and Personal Injury Hazard

- Unplug the vacuum cleaner before cleaning the unit. Failure to do so could result in electrical shock or personal injury from the vacuum cleaner starting unexpectedly.

EXHAUST FILTER

The exhaust filter is washable HEPA filter.
(Optional: Non washable HEPA filter)
The exhaust filter must be rinsed when it becomes dirty.

Rotate to the left side to remove the filter cover. (Fig.A,B)

We advise you to rinse at least once a year.
After rinsing, allow the exhaust filter to dry in a shaded location for 24 hours.
Never renstall the exhaust filter while it is wet.
Do not operate the vacuum cleaner without the filter in place.

Replacement filter can be obtained from your dealer.

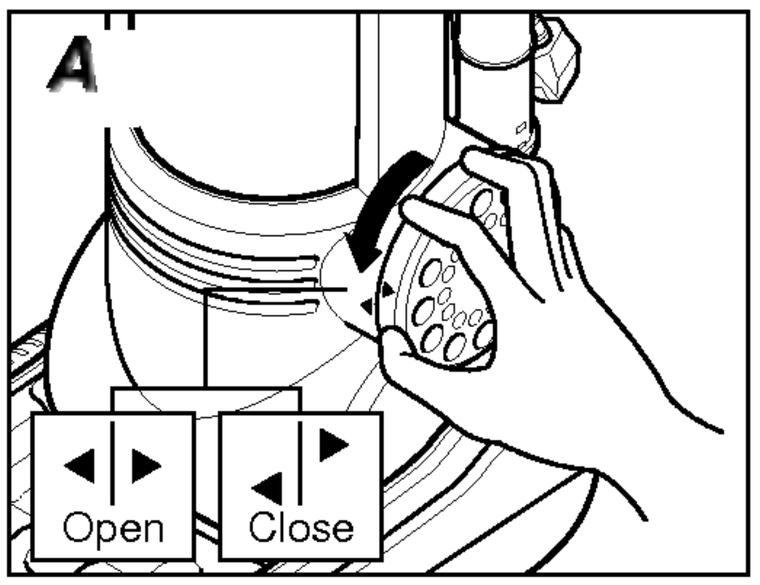

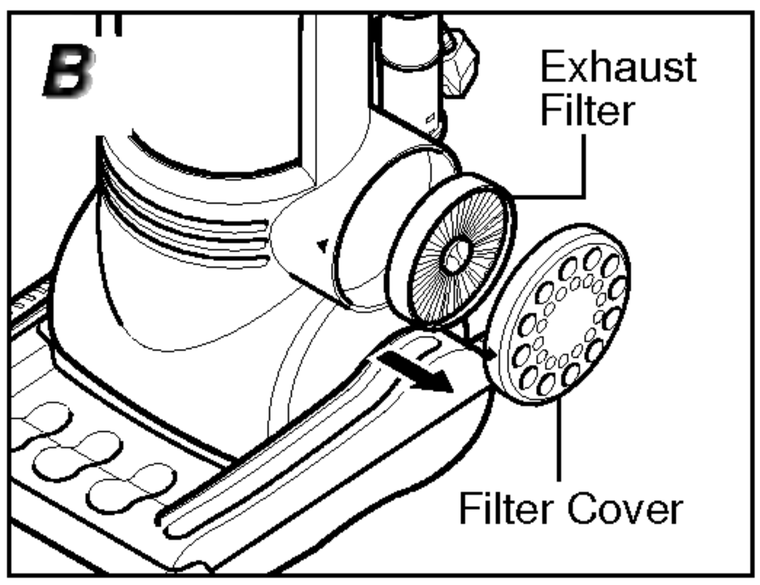

REMOVING/INSTALLING THE BOTTOM PLATE

Before replacing any parts, disconnect the vacuum from the electrical outlet.
To remove the bottom plate, unscrew the bottom plate first. Then pull the bottom plate away from the nozzle housing. (Fig. C)

To install the bottom plate, hook the front end of bottom plate into the slots on the front of nozzle. (Fig. D)

Press the bottom plate then tighten the screws.

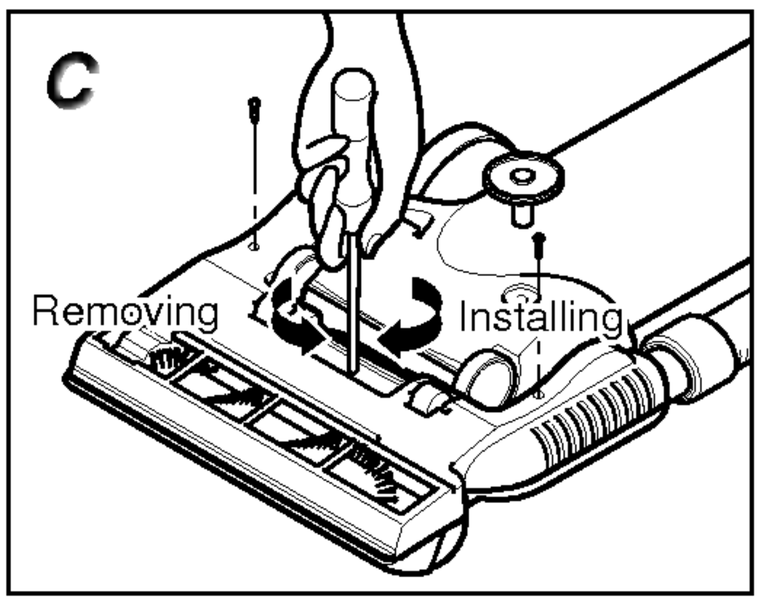

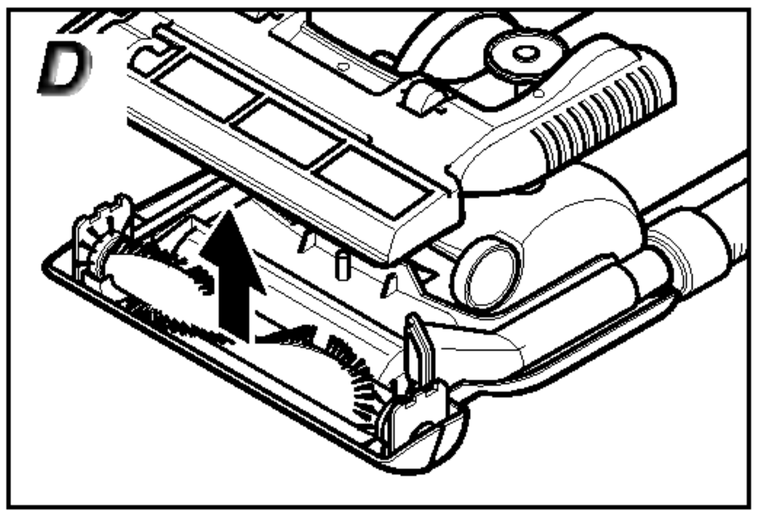

REPLACEMENT INSTRUCTIONS

WARNING

Electrical Shock and Personal Injury Hazard

- Unplug the vacuum cleaner before cleaning the unit. Failure to do so could result in electrical shock or personal injury from the vacuum cleaner starting unexpectedly.

REPLACING THE BELT AND/OR AGITATOR

Check the belt and agitator regularity. If they are broken of worn out, replace them.

Turn the unit over and remove the bottom plate as described in Removing/Installing the Bottom Plate section.

To remove the agitator, grasp both ends of the agitator and lift it slowly. Remove the belt from the agitator pulley and the motor shaft. If the belt is broken, be sure all pieces are removed.

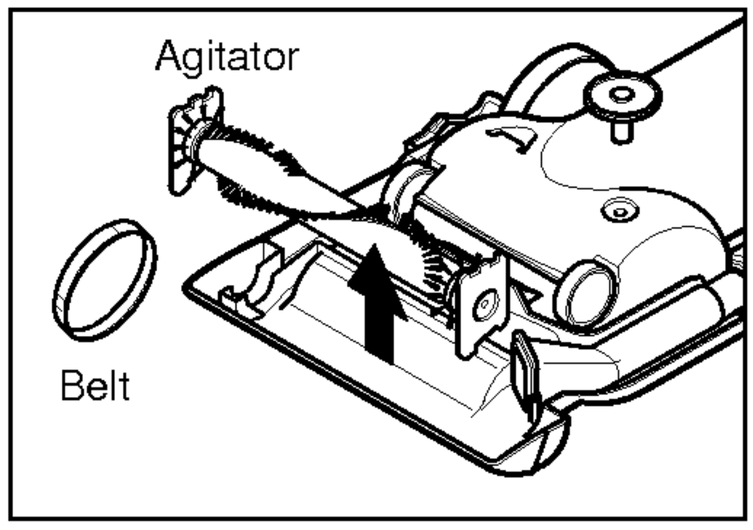

WARNING

Personal Injury Hazard

The belt is under high tension; be careful when removing the agitator.

Failure to do so could result in personal injury caused by the agitator releasing quickly and snapping away.

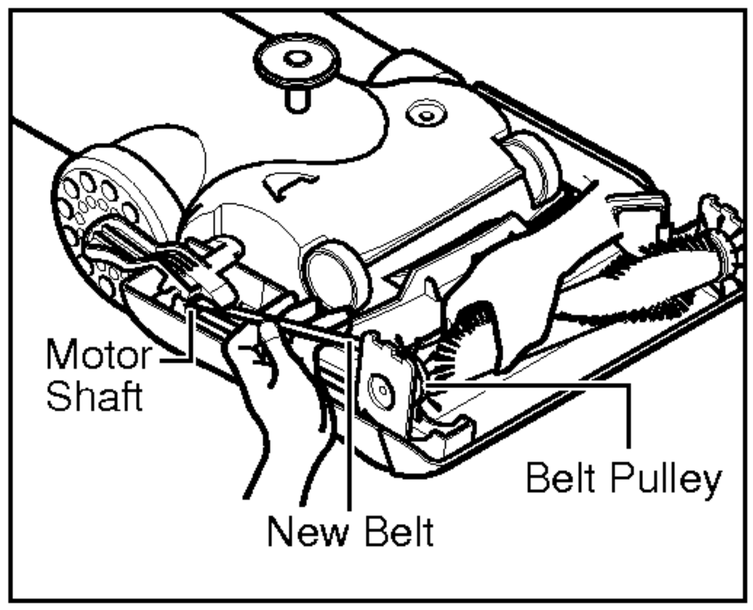

Loop the new belt around the motor shaft and agitator pulley.

Reinsert the agitator, making sure that both ends of the agitator fit into the grooves in the nozzle head.

After installing the agitator, turn it by hand to make sure that the belt is not twisted or pinched and that all parts turn freely.

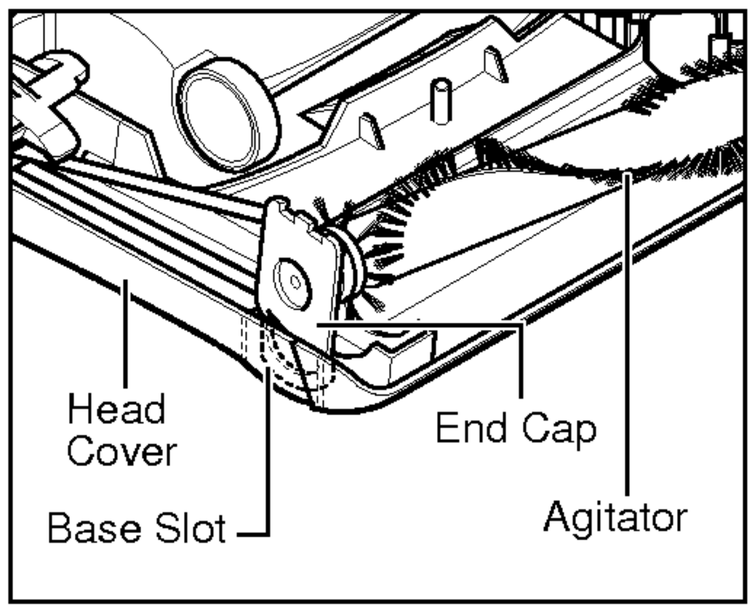

Reinstall the body cover by reversing the steps in the Removing/Installing the Bottom Plate section.

The agitator must also be cleaned according to the following schedule:

Vacuum Use	**Clean Agitator**
HEAVY - (used daily)	every week
MODERATE - (used 2-3 times/week)	every week
LIGHT - (used 1time/week)	every 2 months

Replacement part are avaiable from your dealer.

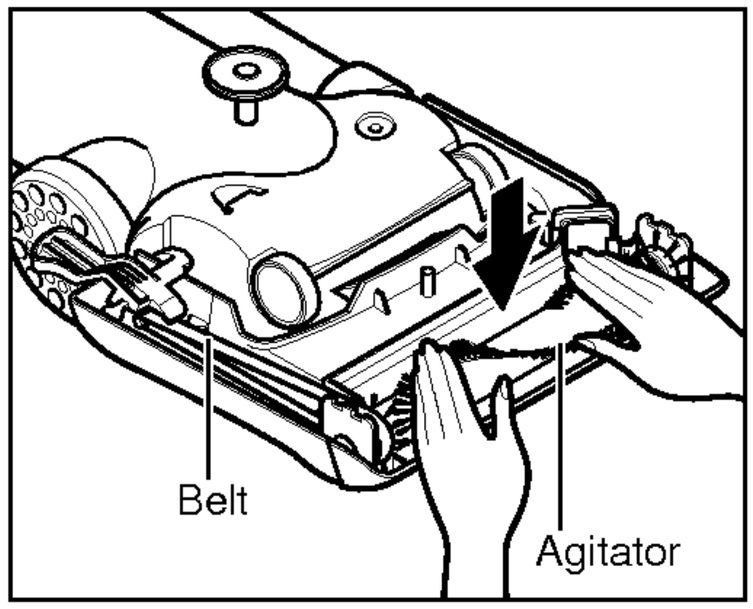

MAINTENANCE

WARNING

Electrical Shock and Personal Injury Hazard

- Unplug the vacuum cleaner before cleaning the unit. Failure to do so could result in electrical shock or personal injury from the vacuum cleaner starting unexpectedly.

CLEANING THE AGITATOR

In order to keep the cleaning efficiency high, clean the agitator regularity.

Make sure you unplug the unit.

If necessary, remove the body cover by following the Removing/Installing the bottom plate section.

Remove the entangled materials, such as carpet pile and lint, strings etc Unwing them or cut them off with scissors, as shown.

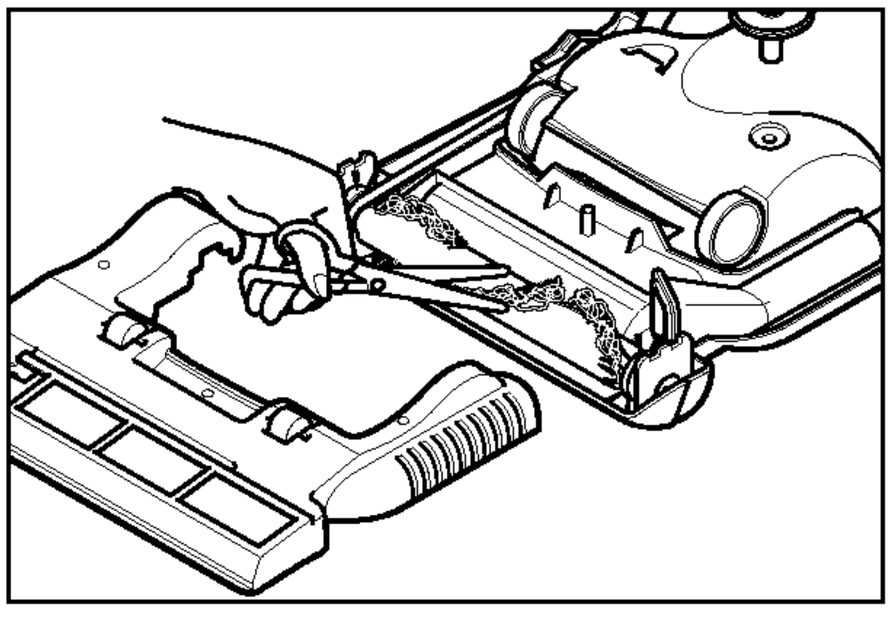

SPECIFICATIONS

Model	VUP153NJP
Power supply	230V/50Hz
Power	IEC-1300W, MAX-1500W
Dimension/upright position (WxDxH)	approx 334 x 1096 x 347mm
Cord length	7.7m
Weight (approx.)	6.3kg

PARTS

Model	VUP153NJP
Belt	4400FI3348A
Exhaust Filter(Washable HEPA)	3210FI2434C
Pre Motor-filter	5231FI2501A

These parts are available from your dealer.

BEFORE REQUESTING SERVICE

Review the chart below for possible solutions in the event of a minor problem. Any service needed, beyond the procedures described below and elsewhere in this manual, should be performed by an authorised service centre.

WARNING

Electrical Shock and Personal Injury Hazard

- Unplug the vacuum cleaner before servicing or cleaning the unit. Failure to do so could result in electrical shock or personal injury.

Problem	Possible Cause	Possible Solution
Vacuum cleaner won't run	1. Not plugged firmly into wall outlet 2. No voltage in wall outlet 3. On/Off switch not turned on 4. Blown fuse in the plug 5. Thermal overload protection activated	1. Plug firmly into wall outlet. 2. Check fuse or circuit breaker. 3. Press the On/Off switch. 4. Change the fuse for a 13 Amp ASTA approve fuse. 5. Turn the vacuum cleaner off, unplug it, and allow it to cool. (See page 3)
Vacuum cleaner won't pick up	1. Belt worn or broken 2. Worn agitator brush 3. Dust container full 4. Hose or nozzle blocked 5. Hose damaged 6. Dust container installed incorrectly 7. Belt not installed on the motor shaft	1. Replace the belt. 2. Replace the agitator. 3. Empty the dust container and check the pre-motor filter. 4. See REMOVING BLOCKAGES on page 13. 5. Replace the hose. 6. Make sure the dust container is seated properly in the handle. 7. Install the belt on the motor shaft. (See page 16.)
Dust escaping the dust container	1. Dust container installed incorrectly 2. Pre-motor filter cap installed incorrectly	1. Make sure the dust container is seated properly in the handle. 2. Make sure the pre-motor filter is in place and seated correctly.

MEMO



LG Electronics Inc.

http://www.lge.com