LG

MICRO HI-FI SYSTEM
OWNER'S MANUAL

MODEL: LX-U550 (LX-U550A/D/X, LXS-U550)
LX-U250 (LX-U250A/D/X, LXS-U250)
LX-W550 (LX-W550A/D/X, LXS-W550)
LX-W250 (LX-W250A/D/X, LXS-W250)

Please read this manual carefully before operating your set.
Retain it for future reference.

Designs and specifications are subject to change without notice for improvement.

Plays Windows Media™

MP3 CD-R/RW

COMPACT disc DIGITAL AUDIO



CAUTION: THESE SERVICING INSTRUCTIONS ARE FOR USE BY QUALIFIED SERVICE PERSONNEL ONLY.
TO REDUCE THE RISK OF ELECTRIC SHOCK DO NOT PERFORM ANY SERVICING OTHER THAN THAT CONTAINED IN THE OPERATING INSTRUCTIONS UNLESS YOU ARE QUALIFIED TO DO SO.

Caution: The apparatus should not be exposed to water (dripping or splashing) and no objects filled with liquids, such as vases, should be placed on the apparatus.

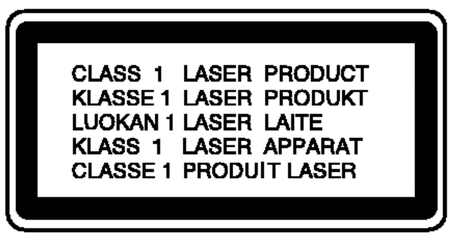

CAUTION: This product employs a Laser System.

To ensure proper use of this product, please read this owner's manual carefully and retain for future reference. Should the unit require maintenance, contact an authorized service center.

Use of controls, adjustments, or the performance of procedures other than those specified herein may result in hazardous radiation exposure.

To prevent direct exposure to laser beam, do not try to open the enclosure. Visible laser radiation whenopen. DO NOT STARE INTO BEAM.

WARNING: Do not install this equipment in a confined space such as a bookcase or similar unit.

CAUTION concerning the Power Cord

Most appliances recommend they be placed upon a dedicated circuit;
That is, a single outlet circuit which powers only that appliance and has no additional outlets or branch circuits. Check the specification page of this owner's manual to be certain.

Do not overload wall outlets. Overloaded wall outlets, loose or damaged wall outlets, extension cords, frayed power cords, or damaged or cracked wire insulation are dangerous. Any of these conditions could result in electric shock or fire. Periodically examine the cord of your appliance, and if its appearance indicates damage or deterioration, unplug it, discontinue use of the appliance, and have the cord replaced with an exact replacement part by an authorized servicer.

Protect the power cord from physical or mechanical abuse, such as being twisted, kinked, pinched, closed in a door, or walked upon. Pay particular attention to plugs, wall outlets, and the point where the cord exits the appliance.

This Logo is only applicable to LX-U550/U250 models.

Contents

1 Introduction 4-6
- Symbols Used in this Manual 4
- Notes on Tapes 4
- Notes on Discs 4
  - Handling discs 4
  - Storing discs 4
  - Cleaning discs 4
- Front / Rear Panel 5
- Remote Control 6
  - Remote Control battery installation . . .6
  - Remote Control Operation Range 6

2 Installation 7
- Speaker System Connection 7
- Antenna (Aerial) Connections 7
- Auxiliary Devices 7

3 Operation 8-16
- Setting the Voltage (OPTIONAL) 8
- Audio Adjustment 8
  - Volume Adjustment 8
  - Headphone Socket 8
  - MUTE 8
  - Sound Quality Adjustment 8
  - SURROUND 8
  - XDSS (Extreme Dynamic Sound System) 8
  - OAO (Orientation Acoustic Optimizer) ON/OFF 8
  - MP3 Optimizer 8
  - DIMMER 8
- Auto Function Selection 9
- Setting the Clock 9
- Using the Sleep Function 9
- Timer 10
- RDS Function - OPTIONAL 11
  - About RDS 11
  - RDS Tuning 11
  - RDS Display Options 11
  - Programme Search (PTY) 11
- Presetting the Radio Stations 12
- Listening to the Radio 12
- Tape Playback 13
  - Basic Playback 13
  - To Stop Play 13
  - Tape Counter Reset 13
  - To Play Rewind or Fast Forward 13
- Tape Recording 13
  - Basic Setting 13
  - General Recording 13
  - CD to Tape Synchronized Recording 13
- CD Playback 14-15
  - Basic Playback 14
  - Pause Playback 14
  - Stop Playback 14
  - Skipping a Track 14
  - Searching a Track 14
  - Repeat 14
  - To check MP3 file information 14
  - Program Play 15
- About MP3/WMA 15
- USB Function (LX-U550/U250 model only) .16

4 Maintenance and Service 17-18
- Shipping the Unit 17
- Cleaning the Unit 17
- Service 17
- Troubleshooting 18

5 Reference 19
- Specifications 19

1.Introduction

To ensure proper use of this product, please read this owner's manual carefully and retain for future reference.

This manual provides information on the operation and maintenance of your CD player. Should the unit require service, contact an authorized service location (refer to Chapter 4, Maintenance and Service).

Symbols Used in this Manual

⚠ Indicates hazards likely to cause harm to the unit itself or other material damage.

Indicates special notes and operating features.

Notes on Tapes

Preventing record
Removing the tab(s) of the cassette (with a small screwdriver) will prevent accidental erasure.

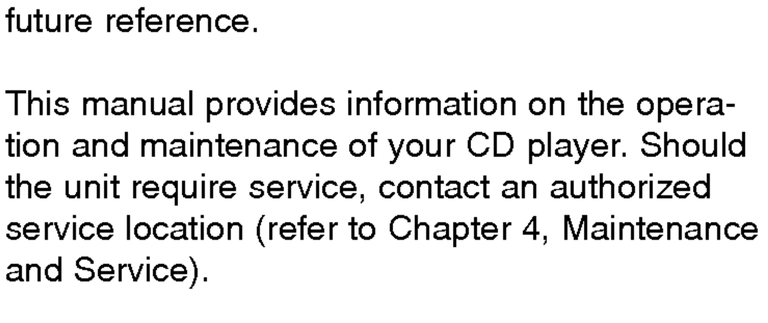

To record again, cover the hole of the tab with adhesive tape.

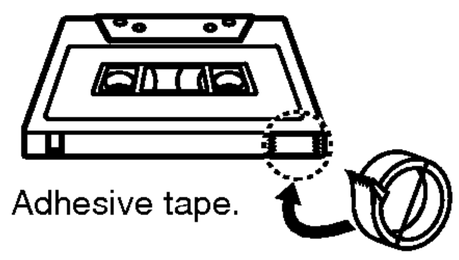

About the protection tape
Before you operate the unit, remove the protection tape on the tape door of the front panel.

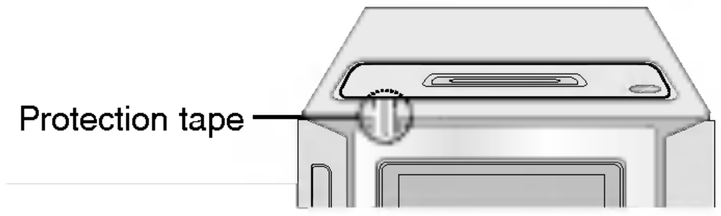

Notes on Discs

Handling discs
Do not touch the playback side of the disc. Hold the disc by the edges so that fingerprints do not get on the surface. Never stick paper or tape on the disc.

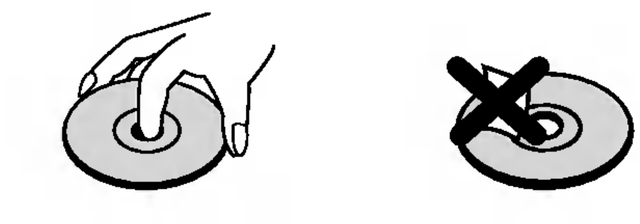

Storing discs
After playing, store the disc in its case. Do not expose the disc to direct sunlight or sources of heat and never leave it in a parked car exposed to direct sunlight.

Cleaning discs
Fingerprints and dust on the disc can cause poor picture quality and sound distortion. Before playing, clean the disc with a clean cloth. Wipe the disc from the center out.

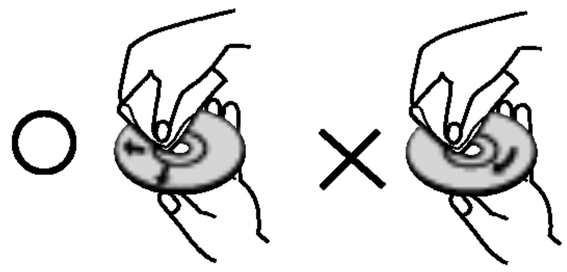

Do not use strong solvents such as alcohol, benzine, thinner, commercially available cleaners, or anti-static spray intended for older vinyl records.

Front / Rear Panel

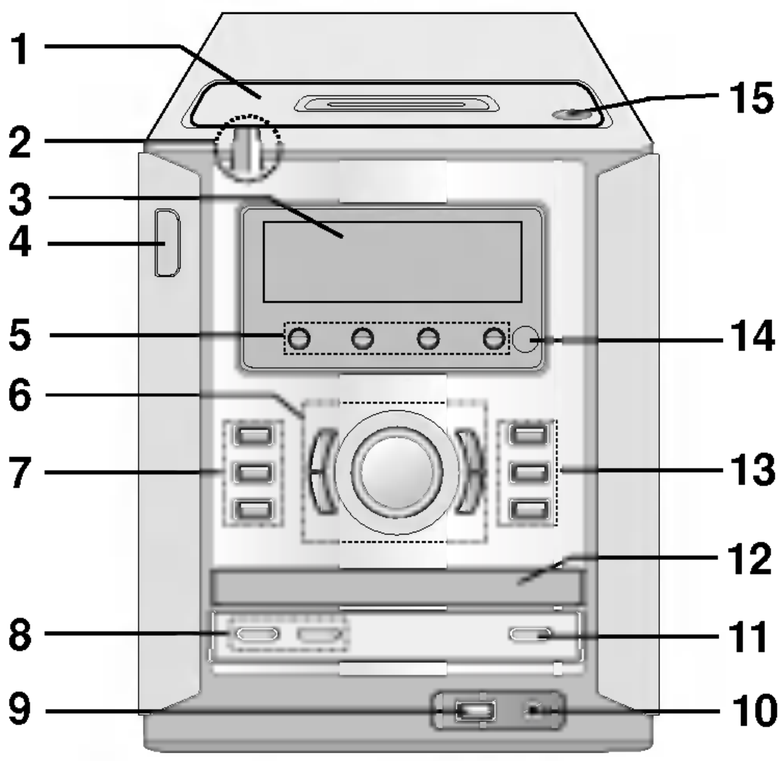

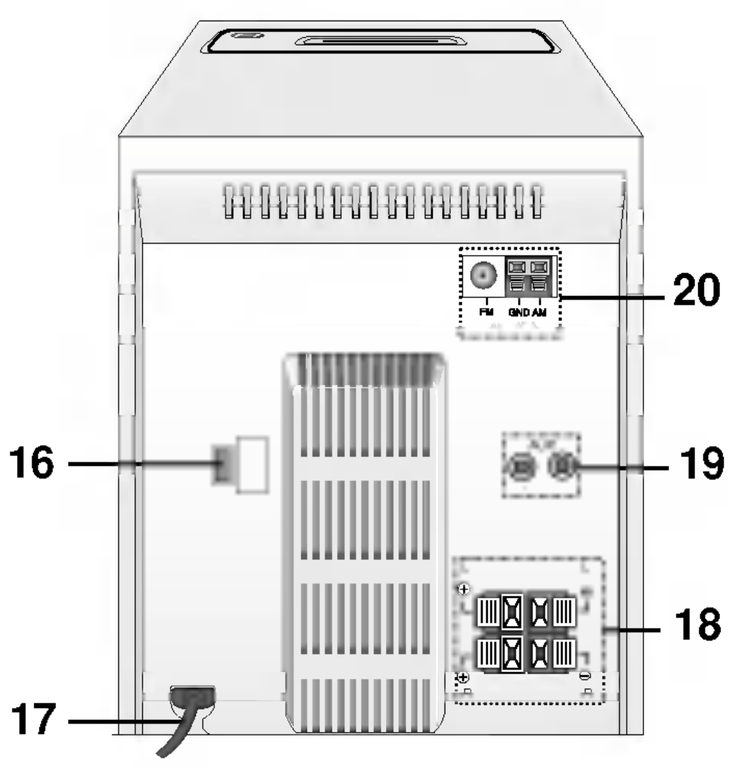

1. TAPE DOOR
2. PROTECTION TAPE
   (Before you operate the unit, remove the protection tape.)
3. DISPLAY WINDOW
4. POWER (⏻) button
5. FUNCTION SELECT buttons
   [TUNER, CD/MP3, AUX (LX-W550 and LX-W250 model only), USB (LX-U550 and LX-U250 model only) TAPE]
6. • PRESET (-/+) buttons (TUNER)
   • REVERSE PLAY (◀) button (TAPE): OPTIONAL
   • PLAY (▶) button (TAPE, CD)
   • TUNING (-/+) buttons
   • CD SKIP/SEARCH (⏮ ◀◀/▶▶ ⏭) buttons
   • TAPE REWIND/FAST FORWARD (⏮ ◀◀/▶▶ ⏭) buttons
   • VOLUME CONTROL KNOB
7. • TIMER button
   • CLOCK button
   • MP3 OPT. button
8. • RDS button : OPTIONAL
   • SET (CLOCK/ TIMER) button
   • CD PAUSE (CD⏸) button
   • COUNTER RESET button (COUNT.RESET)
   • MODE/RIF button
   • PLAY MODE button
   • CD SYNC. button
9. USB connector (LX-U550 and LX-U250 model only)
10. HEADPHONE SOCKET (🎧): ∅3.5mm
11. STOP(■)/CLEAR button
12. CD DOOR
13. • XDSS button
    • OAO (Orientation Acoustic Optimizer) button
    • ⏏ OPEN/CLOSE button
14. REMOTE SENSOR
15. ⏏ PUSH EJECT position -DECK
16. VOLTAGE SELECT SWITCH : OPTIONAL
17. POWER CORD
18. SPEAKER TERMINAL
19. AUXILIARY INPUT SOCKET
20. ANTENNA TERMINAL

Remote Control

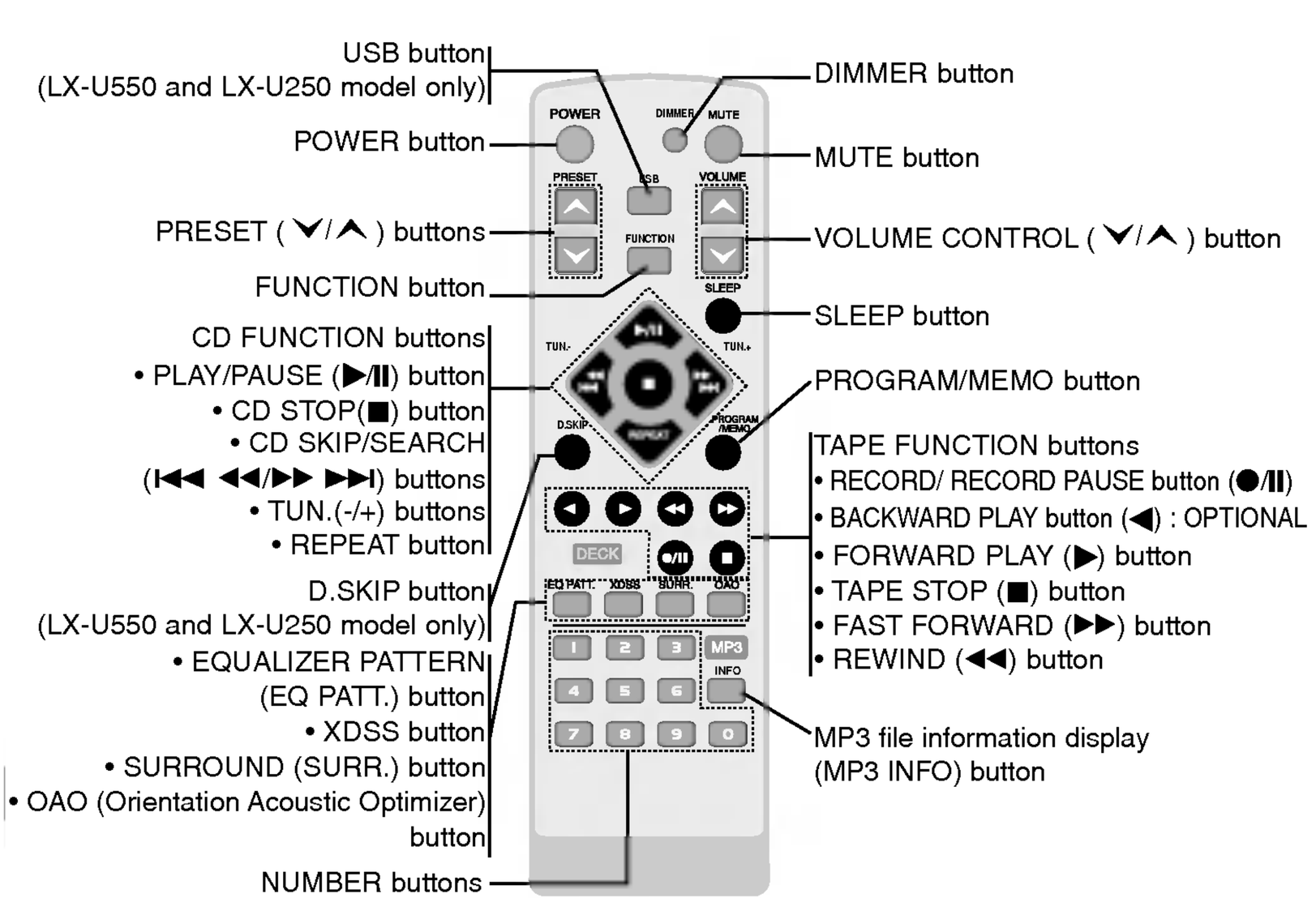

Remote Control battery installation

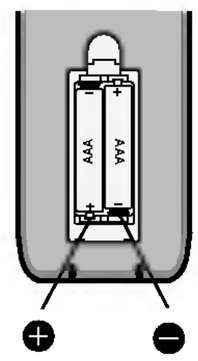

Detach the battery cover on the rear of the remote control, and insert two R03 (size AAA) batteries with ⊕ and ⊖ aligned correctly.

⚠ **Caution:** Do not mix old and new batteries. Never mix different types of batteries (standard, alkaline, etc.).

Remote Control Operation Range

Point the remote control at the remote sensor and press the buttons.

Distance: About 23 ft (7 m) from the front of the remote sensor.

Angle: About 30° in each direction of the front of the remote sensor.

2.Installation

Speaker System Connection

Connect the speaker cords to the speaker terminal.

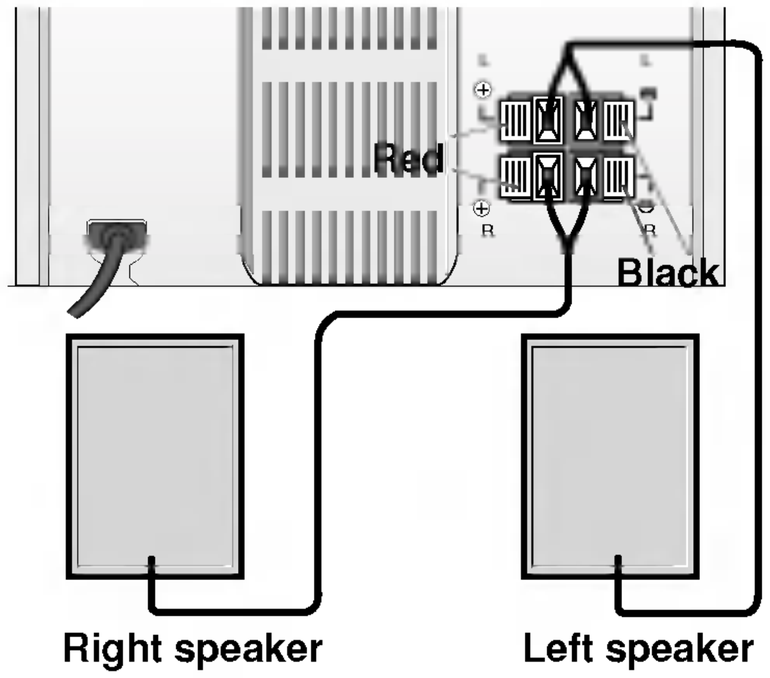

Notes

- Be sure to match the speaker cord to the appropriate terminal on the components: + to + and – to –. If the cords are reversed, the sound will be distorted and will lack base.
- Do not disassemble the front cover of supplied speaker.

Antenna (Aerial) Connections

Connect the supplied FM/AM antennas for listening to the radio.

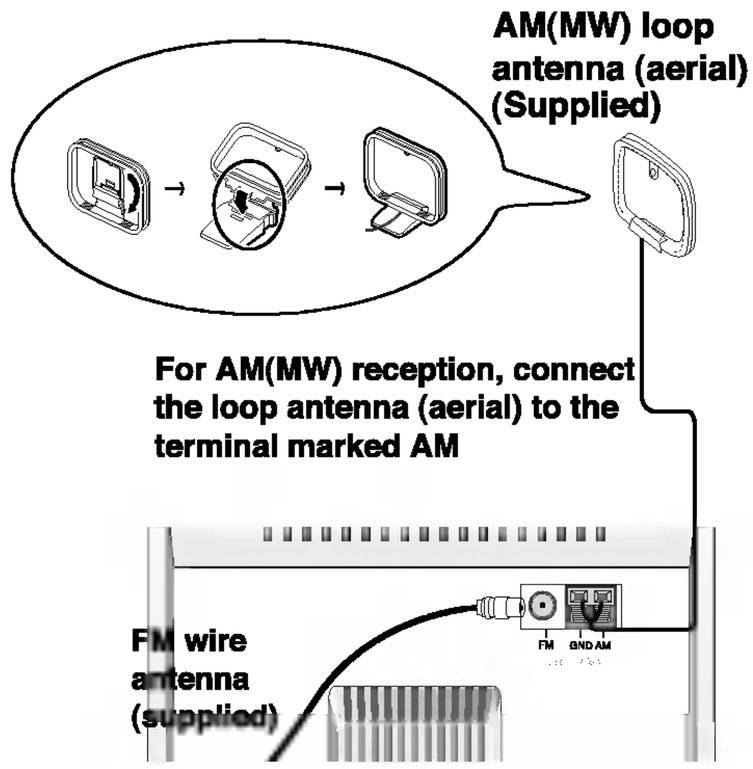

Notes

- To prevent noise pickup, keep the AM loop antenna away from the unit and other components.
- Be sure to fully extend the FM wire antenna.
- After connecting the FM wire antenna, keep it as horizontal as possible.

Auxiliary Devices

Connect an auxiliary device such as a TV or VCR via the rear mounted AUX sockets and press AUX.

Note

- You can also record from the auxiliary input source, (see the recording section).
- Turn the unit off and then connect an auxiliary device before you connect an auxiliary device. Because it may be made a noise.

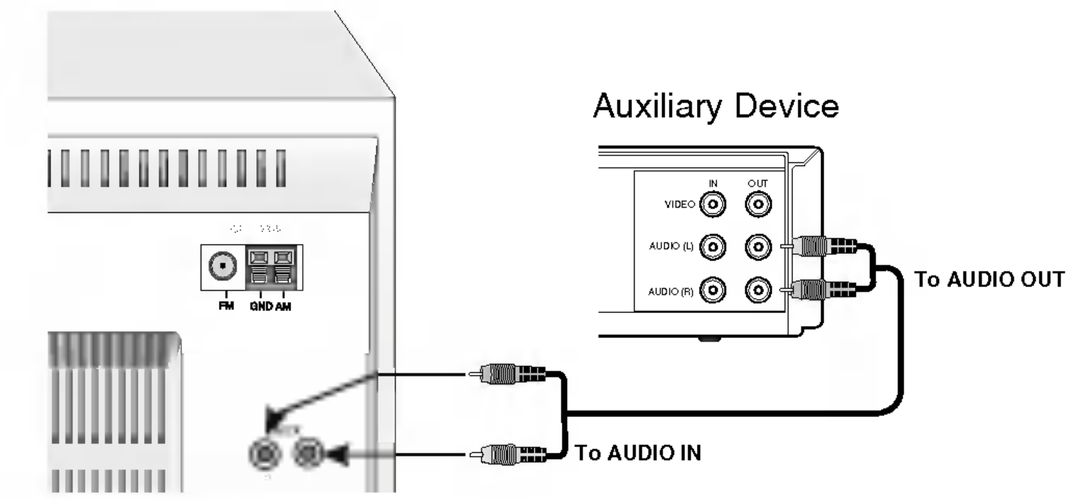

3.Operation

Setting the voltage (OPTIONAL)

If your set is equipped with a voltage selector at the back side, be sure to set it to your local power supplied before connecting the AC power cord.

Audio Adjustment

Volume Adjustment

- Turn the VOLUME CONTROL KNOB clockwise to increase the sound level, or counterclockwise to decrease it.
- Using the remote control, press VOLUME CONTROL (▲) to increase the sound level, or (▼) to decrease it.

Headphone Socket

Connect a stereo headphone plug (ø3.5mm) into the headphone jack to listen to the sound through headphones. The speakers are automatically disconnected when you plug in the headphones (not supplied).

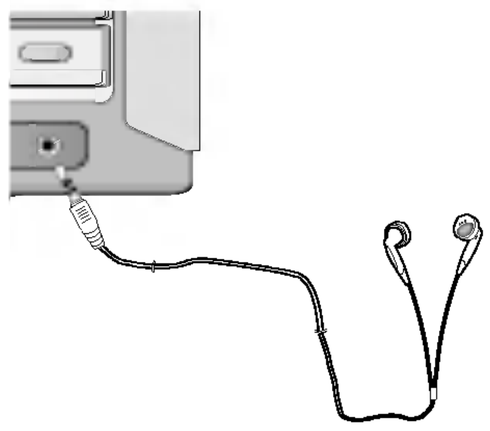

MUTE

Press **MUTE** to temporarily stop the sound such as when you answer the telephone. The MUTE indicator flashes in the display window.
To cancel it, press MUTE again.

Sound Quality Adjustment

You can select a desired sound mode by using **EQ PATT.** button on the remote control.
When a sound mode passes by with the left side from the right, press EQ PATT..
FLAT → POP → CLASSIC → ROCK → DRAMA → JAZZ → SALSA → MUSICAL→SAMBA → FLAT ...

SURROUND

You can select a desired surround mode by using **SURR**. button on the remote control.
When a surround mode passes by with the left side from the right, press SURR..
SURR OFF → CINEMA → EALA → TUNNEL → HALL → THEATER → VOCAL → CHURCH → SURR OFF...

XDSS (Extreme Dynamic Sound System)

Press **XDSS** to reinforce treble, bass and the surround effect. The “XDSS ON” or “XDSS OFF” indicator lights. To cancel, press XDSS again.

OAO (Orientation Acoustic Optimizer) ON/OFF

Press **OAO** to reinforce the bass sound. The “OAO ON” or “OAO OFF” indicator lights on the displaywindow.
When “OAO ON” or “OAO OFF” indicator passes by with the left side from the right, press OAO.

MP3 Optimizer

This function is optimizered for compressible MP3 file. It is improved the bass sound to make sweet sound.
Each time you press **MP3 OPT.** the setting changes in the following order.
OPTIM ON → OPTIM OFF

DIMMER

This function is turned the LED (Light-emitting diode) of VOLUME CONTROL KNOB off and darken the display window by half in power-on status .

Press **DIMMER** once. The LED (Light-emitting diode) of VOLUME CONTROL KNOB off.
If you press it once more, the display window will be darken by half. To cancel it press the button again.

Auto Function Selection

- If you press PLAY/PAUSE (▶/II) on the remote control during radio receiving or CASSETTE play, CD will be operated automatically.
- If you press TUNER on the front panel during CD or CASSETTE play, radio function will be operated.

Setting the Clock

1. Press CLOCK.
   (If the clock requires setting, press and hold CLOCK for more than 2 seconds.)

2. Select a 24 hour cycle or 12 hour cycle by pressing PRESET (-)/(+).

   AM 12:00 (12HR) or 0:00 (24HR)

3. Press SET to confirm the selected hour cycle.

4. Use PRESET (-)/(+) to set the correct hours.

5. Press SET.

6. Use PRESET (-)/(+) to set the correct minutes.

7. Press SET and the correct time is shown on the display.

8. Press CLOCK at any time to display the time for about 5 seconds.

Using the Sleep Function

When the sleep timer is used, the power is automatically turned off after the specified time has elapsed.

1. To specify the time delay before the power is turned off, press SLEEP.
   In the display window you see SLEEP 90 for about 5 seconds. This means that the system turns off automatically after 90 minutes.

   Press SLEEP until the desired time is displayed.
   Note: Each time the button is pressed the time interval is reduced by 10 minutes. i.e. 80...70... etc.

2. To check the remaining time until the power is turned off, press SLEEP while the sleep function is active. The time remaining is displayed for about 5 seconds.

Note
If you press SLEEP while the sleep time is displayed, the SLEEP time is reset.

3. To cancel the sleep timer mode, press the SLEEP button repeatedly until “SLEEP 10” appears, and then press SLEEP once again while “SLEEP 10” indicator is displayed.

Timer

With the TIMER function you can have the radio reception and recording, CD play, tape play turned on and off at the time desired.

1. Press CLOCK to check the current time.
   (If you don't set clock, timer function doesn't work.)

2. Press TIMER to enter the timer setting mode.
   (If you want to correct the previous memorized TIMER setting, press and hold the TIMER button more than 2 seconds.
   - The previous memorized timer on time and TIMER indicators appear in the display.)

3. Each function [TUNER→CD→TAPE→USB (LX-U550 and LX-U250 model only)] flashes in the display window in turn. Press SET when the desired function is flashing.

4. 1. a. When you select the TUNER function, "PLAY" and "REC" indicator flash in the display window alternately for about 3 seconds.
   "PLAY" indicator : TUNER play only
   "REC" indicator : TUNER play and recording
   b. Press SET when the desired function is flashing.
   c. Select the previous memorized preset number with PRESET (-)/(+) button and press SET.
   - "ON TIME" indicator appears for about 0.5 seconds in the display window and then disappears.
   2. When you select the CD, TAPE or USB (LX-U550 and LX-U250 model only) function,
   - "ON TIME" indicator appears for about 0.5 seconds in the display window and then disappears.

5. Set the hour to switch on by pressing PRESET (-)/(+).

6. Press SET to confirm the hour to switch on.

7. Set the minute to switch on by pressing PRESET (-)/(+).

8. Press SET to confirm the minute to switch on.
   - "OFF TIME" indicator appears for about 0.5 seconds in the display window and then disappears.

9. Set the hour to switch off by pressing PRESET (-)/(+).

10. Press SET to confirm the hour to switch off.

11. Set the minute to switch off by pressing PRESET (-)/(+).

12. Press SET.

13. Adjust the volume level by pressing PRESET (-)/(+).

14. Press SET.
    "TIMER" appears in the display window and the timer setting has been completed.

15. Switch the system off.
    The selected function is automatically switched on and off at the time set.

To cancel or check the timer

Each time the TIMER button is pressed you can select the timer set or cancel. You can also check the timer setting status.
To activate or check the timer, press the TIMER button so that "TIMER" appears in the display window.
To cancel the TIMER, press the TIMER button so that "TIMER" disappears in the display window.

RDS Function - OPTIONAL

About RDS

This unit is equipped with RDS (Radio Data System), which brings a wide range of information to FM radio. Now in use in many countries, RDS is a system for transmitting station call signs or network information, a description of station programme type text message about the station or specifics of musical selection and the correct time.

RDS Tuning

When a FM station is tuned in and it contains RDS data, the unit will automatically display the station's call sign and the RDS indicator will light in the Display Window as well as indicators for the programme type recognition (PTY), Radio Text (RT), Clock Time (CT) and RDS services programme (PS) if transmitted by the station.

RDS Display Options

The RDS system is capable of transmitting a wide variety of information in addition to the initial call sign that appears when a station is first tuned. In normal RDS operation the display will indicate the station name, broadcast network or call letters. Pressing **RDS** on the front panel enables you to cycle through the various data types in the sequence:

(PTY → RT→ CT → PS→ FREQUENCY)

- PTY (Programme type recognition)- The name of the programme type is shown in the Display Window.
- RT (Radio text recognition)- The name of the radio text is shown in the Display Window.
- CT (Time controlled by the channel)- Enables the unit to receive the actual time and show it in the Display Window.
- PS (Programme Service name)- The name of the channel is shown in the Display Window.

Note

Some RDS stations may not choose to include some of these additional features. If the data required for the selected mode is not being transmitted, the Display Window will show a PTY NONE, RT NONE, CT NONE, PS NONE message.

Programme Search (PTY)

A major benefit of RDS is its ability to encode broadcasts with Programme Type (PTY) codes that indicate the type of material being broadcast. The following list shows the abbreviations used to indicate each PTY along with an explanation of the PTY.

NEWS	News
AFFAIRS	Current Affairs
INFO	Information
SPORT	Sports
EDUCATE	Educational
DRAMA	Drama
CULTURE	Culture
SCIENCE	Science
VARIED	Varied Speech Programme
POP M	Popular Music
ROCK M	Rock Music
EASY M	Easy Listening Music
LIGHT M	Classical Music
CLASSICS	Serious Classical Music
OTHER M	Other Music
WEATHER	Weather Information
FINANCE	Financial Programmes
CHILDREN	Children s Programmes
SOCIAL	Social Affairs Programmes
RELIGION	Religious Broadcasts
PHONE IN	Phone-In Programmes
TRAVEL	Travel and Touring
LEISURE	Leisure and Hobby
JAZZ	Jazz Music
COUNTRY	Country Music
NATION M	National Music
OLDIES	Oldies Music
FOLK M	Folk Music
DOCUMENT	Documentary Programmes
TEST	Station Alarm Test Message
ALARM 1	Emergency Broadcast Information

You may search for a specific Programme Type (PTY) by following these steps.

1. Press TUNER (or FUNCTION) to select FM mode.
2. Select a desired station by pressing TUNING (-)/(+).
   When the RDS transmission is received, the display shows the program service name (PS) after RDS indicator appears.
3. Press the RDS to select PTY mode.
4. To search for a different PTY, press the PRESET (-)/(+) while the last PTY in use is still displayed to scroll through the list of available PTY types.
5. When the PTY is selected, press the TUNING (-)/(+) within 5 seconds.
   The unit will go into an automatic search mode and attempt to find the next station with acceptable signal strength that matches the desired PTY type.

Presetting the Radio Stations

You can preset 50 stations for FM and AM. Before tuning, make sure that you have turned down the volume to the minimum.

1. Press TUNER on the front panel or FUNCTION on the remote control to select the frequency (AM or FM) you want.

2. Select a station you want by pressing TUNING (-)/(+) buttons.
   Tuning in automatically
   - Press TUNING (-)/(+) for more than 0.5 second. Scanning stops when the unit tunes in a stations.

   Tuning in manually
   - Press TUNING (-)/(+) briefly and repeatedly.

3. Press PROGRAM/MEMO on the remote control.
   A preset number will flash in the display window.

4. Press PRESET (-)/(+) (or PRESET (⮟/⮝) on the remote control) to select the preset number you want.

5. Press PROGRAM/MEMO again.
   The station is stored.

6. Repeat steps 1 (or 2) to 5 to store other stations.

To delete all the memorized stations
Press and hold PROGRAM/MEMO on the remote control for about two seconds, “CLEAR” appears in the display window and then PROGRAM/MEMO on the remote control again, the stations are deleted.

For your reference
If all stations have already been entered, FULL message will appear in the display window for a moment and then a preset number will flash. To change the preset number, follow the steps 4-5.

To recall presets
Press and hold PRESET (-)/(+) (or PRESET (⮟/⮝) on the remote control) until the desired preset number appears or press it repeatedly.

Listening to the Radio

1. Press TUNER on the front panel or FUNCTION on the remote control) to select the frequency (AM or FM) you want.
   The last received station is tuned in.

2. Press PRESET (-)/(+) (or PRESET (⮟/⮝) on the remote control) repeatedly to select the preset station you want.
   - Each time you press the button, the unit tunes in one preset station at a time.

3. Adjust the volume by rotating VOLUME CONTROL KNOB (or pressing VOLUME (⮟/⮝) on the remote control) repeatedly.

To listen to non-preset radio stations
- Use manual or automatic tuning in step 2 on left.
- For automatic tuning, press and hold TUNING (-)/(+) on the front panel.

To turn off the radio
Press POWER (⏻) to turn the unit off or select another function mode [CD/MP3, AUX, USB (LX-U550 and LX-U250 model only), TAPE].

For your reference
- If an FM program is noisy
  Press MODE/RIF so that “STEREO” disappears in the display window. There will be no stereo effect, but the reception will improve. Press MODE/RIF again to restore the stereo effect.
- To improve reception
  Reposition the supplied antennas.

Notes
- Use MODE/RIF (Radio Interference Filter) function to switch to mono reception if stereo reception is distorted by noise.
- When recording the MW(AM) broadcast, beat noises may occur. If it does, press MODE/RIF once.

Tape Playback

Use only normal tapes.

Basic Playback

1. Press TAPE (or FUNCTION) to select tape function.
   ("NO TAPE" appears in the display window.)
2. Open the cassette door by pushing ⏏ PUSH EJECT position.
3. Insert a cassette with the tape side to the upside and then close deck.
4. Press PLAY (▶ or ◀: OPTIONAL).

To Stop Play
Press STOP(■) during playback.

Tape Counter Reset
Press COUNTER RESET (COUNT.RESET) during playback. Playing time appears "TP - 0000" in display window.

To Play Rewind or Fast Forward
After pressing I◀◀ ◀◀/▶▶ ▶▶I on the front panel or ◀◀/▶▶ on the remote control during playback or stop, press PLAY(▶) at the point you want.

AUTO STOP DECK
- After auto stop deck plays only front side, the unit stops automatically.

AUTO REVERSE DECK:OPTIONAL
- You can select direction of the cassette you want by pressing PLAY MODE.

Display	Function
	After the cassette plays front or reverse (backward play) side, stops automatically.
	After the cassette plays front and reverse side, stops automatically.
	After the cassette plays six times repeatedly front and reverse side, stops automatically.

Tape Recording

Wind the tape to the point recording starts.
Use only normal tapes.

Basic Setting
1. Select a function you want to record except tape function.
2. Open the cassette deck and insert a blank cassette into the cassette compartment.

   To set the recording direction :OPTIONAL
   Press PLAY MODE repeatedly to set the recording direction.

General Recording
1. Press ●/II on the remote control.
   - "REC" flashes and holds the cassette in pause mode.
2. Press ●/II or PLAY(▶) on the front panel or the remote control.
   The recording begins.

To pause recording
Press ●/II during recording.
- "REC" flashes in display window.

To stop recording
Press TAPE STOP(■).

CD to Tape Synchronized Recording
The CD synchro recording function dubs a complete CD and programmed titles automatically into a cassette.

1. Press CD SYNC. in stop mode.
   "REC" flashes and "CD SYNC" indicator lights.
2. The synchronized recording is started automatically after about 8 seconds.

Notes
- If you wish to record from the desired track, select the desired track with CD SKIP/ SEARCH (I◀◀ ◀◀/▶▶ ▶▶I) before commencing CD synchro recording.
- The function change is not possible during recording.

CD Playback

Basic Playback

1. Press CD/MP3 (or FUNCTION) button to select CD/MP3 function.
   If no disc is loaded then “NO DISC” is displayed.
2. Press ⏏ OPEN/ CLOSE and place the disc into the disc tray.

Note
To load an 8cm (3 inch) disc, put it onto the inner circle of the tray.

3. Press ⏏ OPEN/ CLOSE to close the disc compartment.
   Audio CD: “READING” appears in the display window, and then the total number of tracks and the playing time are displayed.
   MP3 CD: “READING” appears in the display window, and then the total number of files is displayed.
4. Press PLAY (▶) on the front panel or PLAY/ PAUSE (▶/II) on the remote control.
   In addition, you can also play an Audio CD or MP3 CD using the NUMBER buttons.

Pause Playback

Press CD PAUSE (CDII) or PLAY/ PAUSE (▶/II) on the remote control during playback.
Press this button again it to resume play.

Stop Playback

Press STOP(■) on the front panel or CD STOP(■) on the remote control during playback.

Skipping a Track

- Press the I◀◀ ◀◀/▶▶ ▶▶I button to go to the next track.
- When the I◀◀ ◀◀/▶▶ ▶▶I button is pressed once midway through a track, the player returns to the start of that track. When it is pressed again, a track is skipped each time the button is pressed.

Searching a Track

After pressing and holding I◀◀ ◀◀/▶▶ ▶▶I button on the remote control during playback, then release at the point you want.

Note
This function is not available to play a MP3 file.

Repeat

To play one track repeatedly
Press REPEAT once during playback.
- “REPEAT 1” appears in the display.

To play all tracks repeatedly
Press REPEAT again during playback.
- “REPEAT” appears in the display.

To cancel repeat play
Press REPEAT once more during playback.
- Repeat indicator disappears.

To check MP3 file information

Press the MP3 Info button during MP3 file playback.
- The information (Title, Artist or Album) of the MP3 file will be shown in the display window.
- If there is no the information of the MP3 file, “NO ID3 TAG” indicator will be shown in the display window.

Note
This unit can play a CD-R or CD-RW that contains audio titles or MP3 files.

Program Play

You can arrange the order of the tracks on the discs and create your own program. The program can contain up to 20 tracks.

1. Press PROGRAM/MEMO on the remote control on the stop mode.
2. Press ⏮ ◀◀/▶▶ ⏭ to select the track.
   EX) "04 P-01" will be shown in the display.
   - Program number
   - Track number
3. Press PROGRAM/MEMO on the remote control.
4. Repeat 1~3.
5. Press PLAY (▶) on the front panel or PLAY/PAUSE (▶/II) on the remote control.
   "PROG." appears in the display window.

To check program contents

Press PROGRAM/MEMO on the remote control on the stop mode.
- A Track and program number will be displayed.

To clear program contents

Press PROGRAM/MEMO on the remote control on the stop mode. And then press CLEAR on the front panel or CD STOP(■) on the remote control.

To add program contents

1. Press PROGRAM/MEMO on the remote control repeatedly on the program stop mode until Track Number blinks.
2. Repeat 2~4 on above.

To modify program contents

1. Press PROGRAM/MEMO on the remote control to display program number you want to modify.
2. Repeat 2~4 on above.

About MP3/WMA

MP3

- An MP3 file is audio data compressed by using the MPEG1 audio layer-3 file-coding scheme. We call files that have the ".mp3" file extension "MP3 files".
- The unit can not read an MP3 file that has not ".mp3" file extension.

WMA

- An WMA file is a Microsoft audio compression technology.
- WMA(Windows Media Audio) offers double the audio compression of the MP3 format.

MP3 Disc compatibility with this unit is limited as follows:

1. Sampling Frequency / 8 - 48kHz
2. Bit rate / 8 - 320kbps
3. CD-R physical format should be "ISO 9660"
4. If you record MP3 files using the software which cannot create a FILE SYSTEM, for example
   "Direct-CD" etc., it is impossible to playback MP3 files. We recommend that you use "Easy-CD Creator", which creates an ISO9660 file system.
5. File names should be named using 30 letters or less and must incorporate ".mp3" extension
   e.g. "********.MP3".
6. Even if the total number of files on the disc have more than 1000, it will only be shown up to 999.

About MULTI SESSION

- This function recognizes the multi session disc according to a disc of CD-ROM type.
  ex) If there are MP3 files in the first session, the MP3 file in the first session is only played.
  If there are only MP3 files in the whole session, all of the MP3 files in the session are played.
  If there is Audio CD in the first session, only the Audio CD in the first session is played.

USB Function (LX-U550/U250 model only)

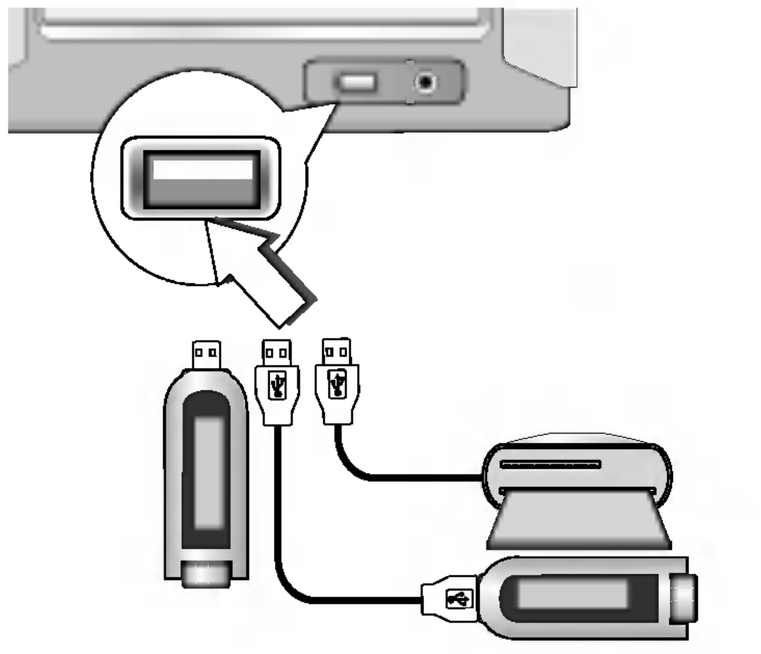

Basic Playback

1. Plug the USB device into the USB connector of your unit.
2. Press the USB button to enter the USB mode. “CHECKING” appears in the display window, and then the total number of files is displayed.
3. Press PLAY (▶) on the front panel or PLAY/PAUSE (▶/II) on the remote control.
   In addition, you can also play using the NUMBER buttons.

Note

Besides Basic Playback,If you want to operate other functions, see the CD Playack section.

Moving to other cards

When you use a MP3 player or memory card, Press D.SKIP on the remote control during playing or stopping.

Notes

- Don’t remove a MP3 player or memory card while playing the USB.
- Don’t add or remove the memory card when playing the USB by using a multi card reader.
- Numbers of file available are maximum 999 EA.
- Be sure to save file in the memory card after formatting.
- No cladding hard disc is supported.
- The MP3 player requiring installation of a drive is not supported.
- This unit can play USB device that contains MP3/WMA files.
- The MP3 file name and ID3 TAG should be named using English.
- This player can not format memory card.
- This player can not use USB HUB.
- Recommended Memory Card
  Compact Flash Card (CFC), Micro Drive (MD), Smart Media Card (SMC), Memory Stick (MS), Secure Digital Card (SD), Multi Media Card (MMC), Memory Stick Pro (MS-Pro)
  - Compatable with : FAT12,16,32
  - Only use the memory cards recommended.

4.Maintenance and Service

Shipping the Unit

The original shipping carton and packing materials can come in handy. For maximum protection, re-pack the unit as it was originally packed at the factory if you need to ship it.

Cleaning the Unit

Use a soft, dry cloth when cleaning the player. If the surfaces are extremely dirty, use a soft cloth lightly moistened with a mild detergent solution.

Never use strong solvents, such as alcohol, benzine, or paint thinner. These might damage the surface of the unit.
Do not use volatile liquids, such as insecticide spray, near the unit. Do not leave rubber or plastic products in contact with the unit for a long period of time. They will leave marks on the surface.

Service

Use the table on the next page to solve any problems before calling for service.

Troubleshooting

Symptom	Cause	Correction
No power.	• The power cord is disconnected.	• Plug the power cord into the wall outlet securely.
No sound.	• The power of the external source equipment is switched off.	• Switch on the external source equipment.
The unit does not start playback.	• No disc or tape is inserted.	• Insert a disc or tape.
	• An unplayable disc or tape is inserted.	• Insert a playable disc or tape.
	• The disc is placed upside down.	• Place the disc with the playback side down.
	• The disc is not placed within the guide.	• Place the disc on the disc tray correctly inside the guide.
The remote control does not work properly.	• The disc is dirty.	• Clean the disc.
	• The remote control is not pointed at the remote sensor of the unit.	• Point the remote control at the remote sensor of the unit.
	• The remote control is too far from the unit.	• Operate the remote control within about 23 ft (7 m).
	• There is an obstacle in the path of the remote control and the unit.	• Remove the obstacle.
	• The batteries in the remote control are exhausted.	• Replace the batteries with new ones.

5.Reference

Specifications

SECTION		MODEL	LX-U550A/D/X LX-W550A/D/X	LX-U250A/D/X LX-W250A/D/X
[General]		Power supply	Refer to the back panel of the unit.	
		Power consumption	100W	60W
		Mass	5.5kg	4.4kg
		External dimensions (WxHxD)	170 X 195 X 323mm	
[CD]		Frequency response	40 - 18000 Hz	
		Signal-to-noise ratio	70 dB	
		Dynamic range	70 dB	
[Tuner]	FM	Tuning Range	87.5 - 108.0 MHz or 65 - 74 MHz, 87.5 - 108.0 MHz	
		Intermediate Frequency	10.7 MHz	
		Signal to Noise Ratio	60/55 dB	
		Frequency Response	60 - 10000 Hz	
	AM (MW)	Tuning Range	522 - 1620 kHz or 520 - 1720 kHz	
		Intermediate Frequency	450 kHz	
		Signal to Noise Ratio	35 dB	
		Frequency Response	100 - 1800 Hz	
[Amp]		Output Power	50W + 50W	20W + 20W
		T.H.D	0.2%	
		Frequency Response	40 - 25000 Hz	
		Signal-to-noise ratio	80 dB	
[TAPE]		Tape Speed	3000 ± 3% (MTT-111. NORMAL-SPEED)	
		Wow Flutter	0.25% (MTT -111, JIS-WTD)	
		F.F/REW Time	120sec (C-60)	
		Frequency Response	250 - 8000Hz	
		Signal to Noise Ratio	43dB(P/B)/43dB(R/P)	
		Channel Separation	50dB(P/B)/45dB(R/P)	
		Erase Ratio	55dB (MTT-5511)	
[Speakers]			**LXS-U550/LXS-W550**	**LXS-U250/LXS-W250**
		Type	2 Way 2 Speaker	2 Way 2 Speaker
		Impedance	6 Ω	6 Ω
		Frequency Response	85 - 20000 Hz	90 - 20000 Hz
		Sound Pressure Level	88 dB/W (1m)	87 dB/W (1m)
		Rated Input Power	50 W	20 W
		Max. Input Power	100 W	40 W
		Net Dimensions (WxHxD)	160x250x186mm	160x250x186mm
		Net Weight (1EA)	2.2kg	2.1kg

Designs and specifications are subject to change without notice.



P/NO : 3834RH0085M