LG Electronics Inc.

REGISTRATION NO."10/DJPDN/MG/3/2005

REFRIGERATOR-FREEZER

OWNER'S MANUAL

PLEASE
READ THIS OWNER'S MANUAL THOROUGHLY
BEFORE OPERATING AND KEEP IT HANDY
FOR REFERENCE AT ALL TIMES.

LEMARI ES PENDINGIN-PEMBEKU

BUKU PETUNJUK PEMAKAIAN

BACALAH BUKU PETUNJUK INI DENGAN
SEKSAMA SEBELUM MENGGUNAKAN LEMARI
ES DAN SIMPANLAH UNTUK DIGUNAKAN
DI LAIN WAKTU.

P/No. 3828JD8780C

CONTENTS

INSTALLATION 3

INNER PARTS 4

OPERATIONS ..... 5 - 9

Starting

Lamp Auto-Off Feature

Before Setting The Temperature

Door Alarm

Self Test

Controls For Refrigerator Compartment

Super Cool

Child Lock

Controls For Freezer Compartment

Green Ion Door Cooling

Ice Making (Optional)

Fresh Zone (Optional)

Defrosting

Deodorizer (Optional)

Extra Shelf (Optional)

Vitamin Vegetable Drawer (Optional)

Dairy Conner

SUGGESTIONS ON FOOD STORAGE 11

CLEANING 12

GENERAL INFORMATION 12

LAMP REPLACEMENT 13

IMPORTANT WARNINGS 13

BEFORE CALLING FOR SERVICE 14

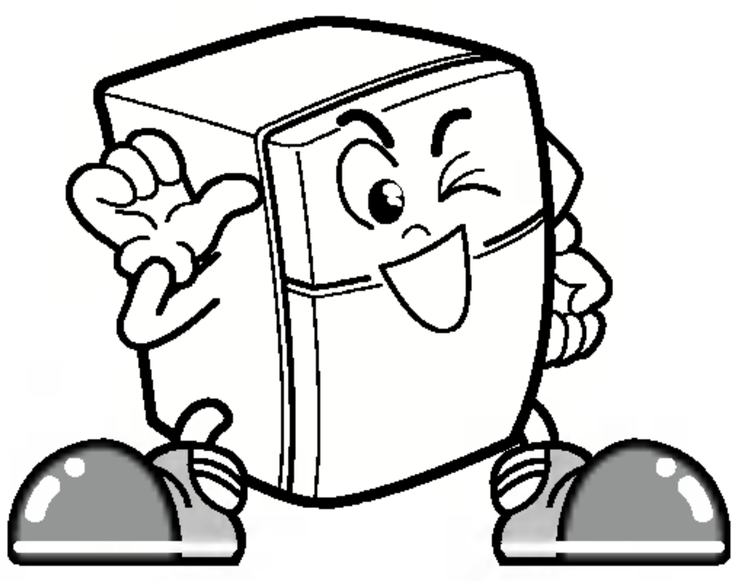

THIS REFRIGERATOR IS MANUFACTURED WITH GREAT CARE, AND UTILIZES THE LATEST IN TECHNOLOGY.
WE ARE CONFIDENT THAT YOU WILL BE FULLY SATISFIED WITH IT'S PERFORMANCE AND RELIABILITY.
BEFORE YOU START YOUR REFRIGERATOR, PLEASE READ THIS BOOKLET CAREFULLY.
IT PROVIDES EXACT INSTRUCTIONS FOR INSTALLATION, OPERATION AND MAINTENANCE, AND ALSO SUPPLIES SOME USEFUL HINTS.

INSTALLATION

1. Select a good location.
   Place your refrigerator where it is easy to use.
2. Avoid placing the unit near heat sources, direct sunlight or moisture.
3. There must be proper air circulation around your refrigerator to keep it operating efficiently. If your refrigerator is placed in a recessed area in the wall, allow at least 10 inches or greater clearance above the refrigerator and 2 inches or more from the wall.
   The refrigerator should be elevated 1 inch from the floor, especially if it is carpeted.
4. To avoid vibrations, the unit must be level. If required, adjust the leveling screws to compensate for unevenness of the floor. The front should be slightly higher than the rear to aid in door closing.
   Leveling screws can be turned easily by tipping the cabinet slightly.
   Turn the leveling screws clockwise ( ) to raise the unit, counterclockwise ( ) to lower it.
5. Don't install this appliance below 5 °C. It may cause the debasement of the refrigerator.

NEXT

1. Clean your refrigerator thoroughly and wipe off all dust accumulated during shipping.
2. Install accessories such as ice cube box, etc., in their proper places.They are packed together to prevent possible damage during shipment.
3. You have a model with bar-type handle, assemble the handle according to instruction card.
4. Connect the power supply cord (or plug) to the outlet. Don't double up with other appliances on the same outlet.
5. Prior to storing food, leave your refrigerator on for 2 or 3 hours.
   Check the flow of cold air in the freezer compartment to ensure proper cooling.
   Your refrigerator is now ready for use.

INNER PARTS

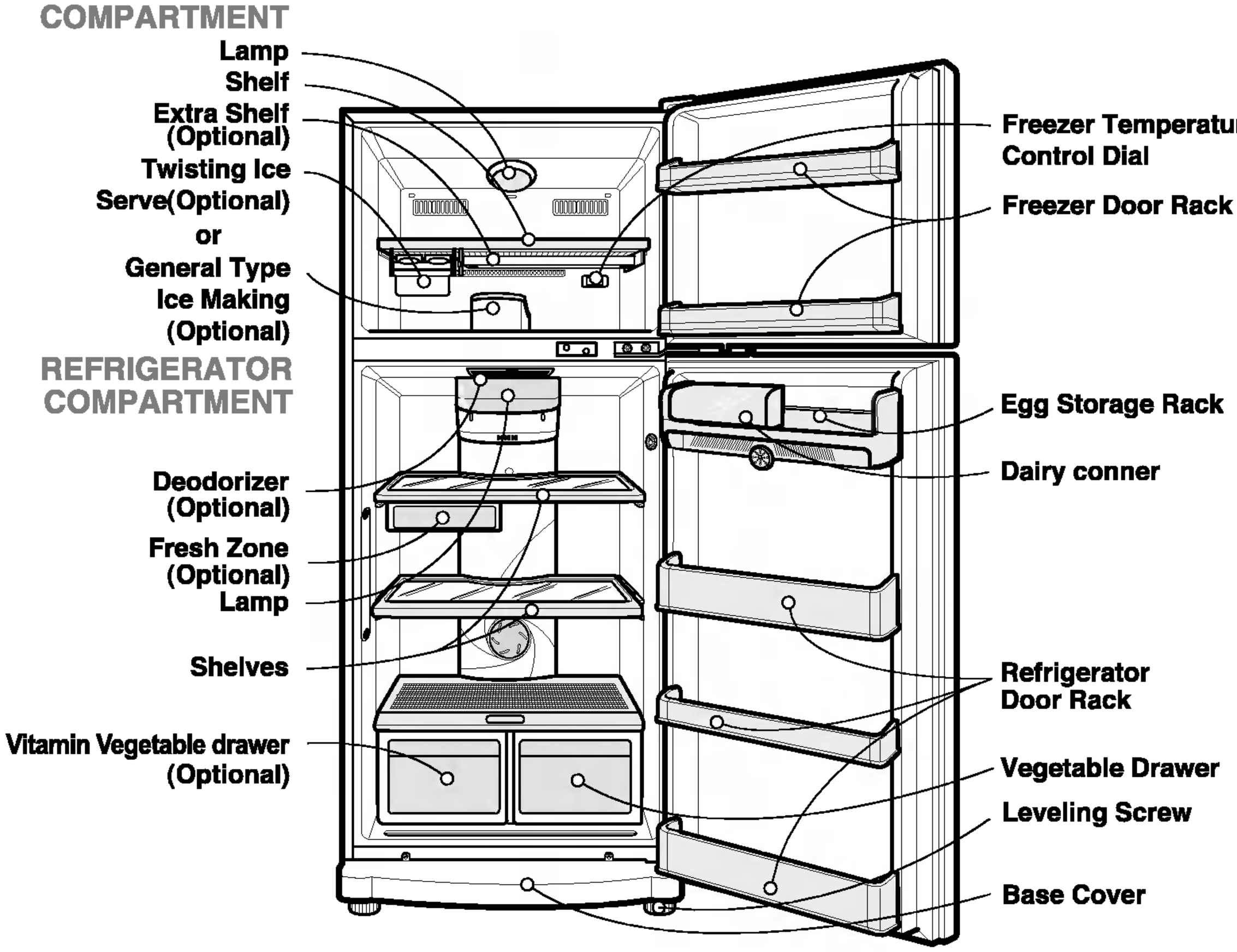

NOTE

- This guide covers several different models. The refrigerator you have purchased may have some or all of the features shown above.

OPERATIONS

STARTING

When your refrigerator is first installed, allow it 2-3 hours to stabilize at normal operating temperatures prior to filling it with fresh or frozen foods.

If operation is interrupted, wait 5 minutes before restarting.

LAMP AUTO OFF FEATURE

When the door is open for 7 minutes or longer, the lamp inside goes off automatically to save energy and prevent overheating. However, the alarm sound continues until the door is closed.

BEFORE SETTING THE TEMPERATURE

- The temperature of the refrigerator is kept constant regardless of changes in room temperature. It is recommended that, once set, the temperature settings(the controls for the refrigerator and freezer compartments) not be changed unless necessary.
- This refrigerator has one temperature control button for the refrigerator compartment and one temperature control dial for the freezer compartment.
- The default setting of the temperature control button for the refrigerator compartment is ‘Normal’.
- The default setting of the temperature control dial for the freezer compartment is '3'.
- This refrigerator has a temperature sensor in the refrigerator compartment. It will start and stop the compressor automatically as needed.

DOOR ALARM

When the door of the refrigerator or the freezer is open for 1 minute, an alarm will sound three. It the door remains open, the alarm will repeat every 30 seconds.

SELF TEST

- Your refrigerator contains a built in diagnostic capability. If it develops a malfunction in certain areas, it will display an error code to assist the repair technician. While an error code is displayed, other control and display functions will not operate.
- If an error code is displayed, contact a service center. Do not disconnect the power cord from the outlet.

CONTROLS FOR REFRIGERATOR COMPARTMENT

To control the Refrigerator temperature, press the REF TEMP button.

The temperature is set in 5 steps, from MIN to MAX cooling. (Min = warmest, MAX = coldest temperature.)

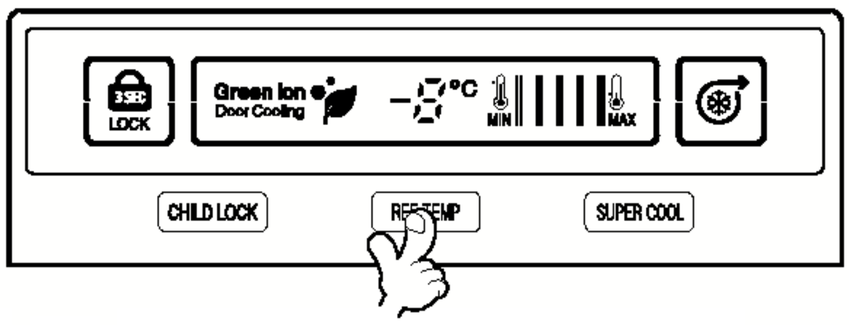

OPERATIONS

SUPER COOL

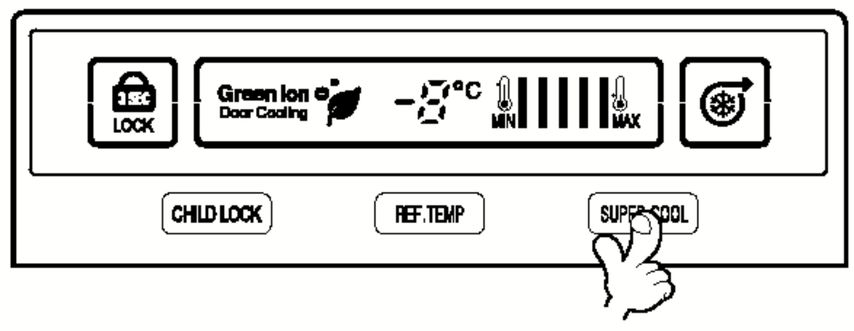

- The Super Cool feature operates when the refrigerator is first turned on. The compressor and circulating fan operate at maximum cooling capacity to quickly lower the refrigerator temperature. It shuts off automatically.
- If warm food is placed into the refrigerator, Super cool can be started with the button on the control panel. Super Cool will shut off when the temperature reaches the proper level or it can be shut off manually by pressing the Super Cool button.

CHILD LOCK

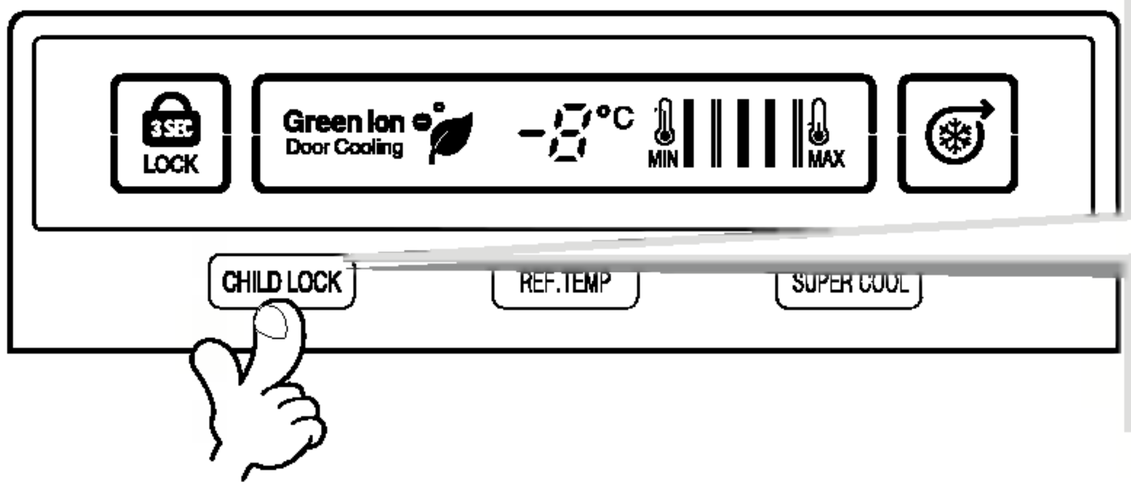

- CHILD LOCK

Press and hold the CHILD LOCK button for 3seconds to lock the child lock.

When it is locked, the Lock LED will be on and the other button will not operate.

To unlock, press and hold the CHILDLOCK button for 3 seconds.

CONTROLS FOR FREEZER COMPARTMENT

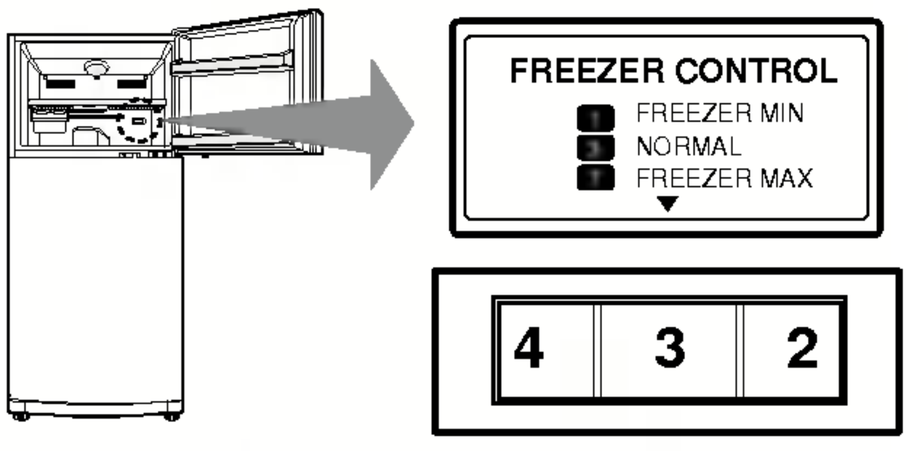

- The higher number the control setting is, the lower the temperature of the Freezer compartment becomes.
- Since the temperature of the refrigerator and freezer compartments is controlled with a fixed amount of cooled air, the refrigerator compartment will be warmer if the freezer compartment becomes colder.
- When the freezer compartment is not cold enough in winter, adjust the control for the freezer to High (4~7).
- Setting the Freezer Knob at ●●● will satisfy 4 STAR. Setting the Freezer Knob at NORMAL will have sufficient freezing effect, so it is recommended to set the Knob at NORMAL.

GREEN ION DOOR COOLING

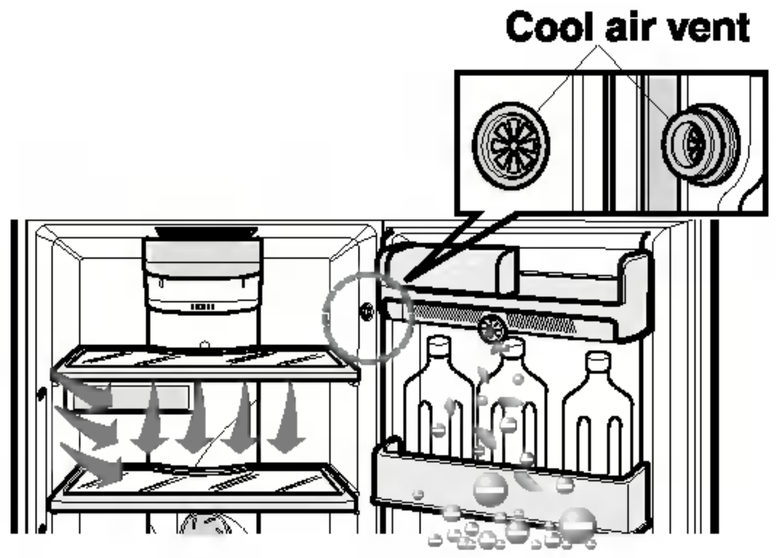

- The anion coating in the duct cover purifies the air and helps stored foods remain fresh longer.
- If water of foreign substances enter the cool air vent while cleaning, efficiency will be lowered. In addition, if gasket is damaged, efficiency may be lowered owing to the escape of cool air.

ICE MAKING(OPTIONAL)

Choose the type of ice-making system you have.

General Type

- To make ice cubes, fill the ice tray with water and place it in the freezer.
- To remove ice cubes, hold the tray at its ends and twist gently.

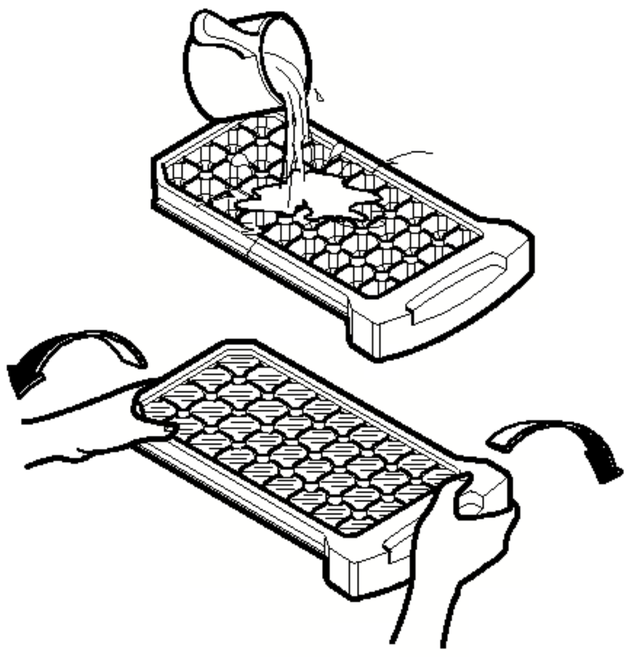

TIP

- To remove ice cubes easily, run water on the tray before twisting.

Twisting Ice Serve Type

- To make ice cubes, fill the ice tray with water and insert in its position.

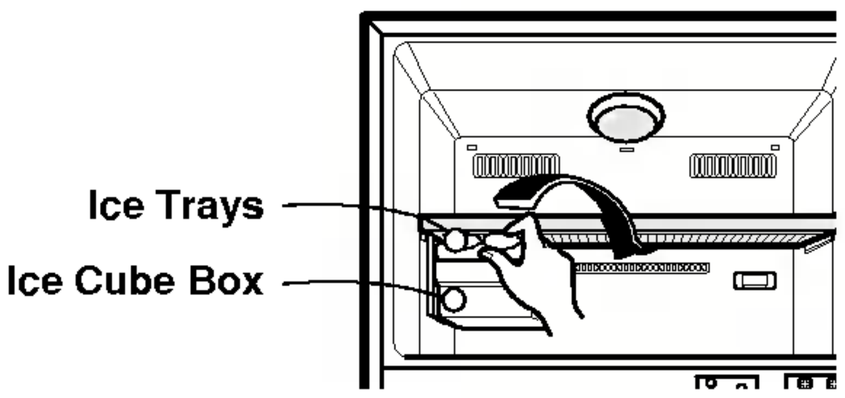

- To remove ice cubes, hold the knob of the tray and turn gently. Then, ice cubes drop in to the ice cube box.

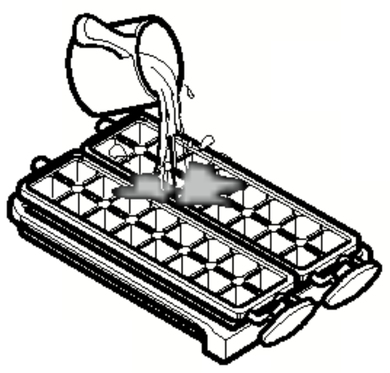

OPERATIONS

FRESH ZONE (OPTIONAL)

- When the door is opened, the warmer air can't influence in the fresh zone. So you can store food more fresh in it.
- The shelf and inserted fresh zone must be placed at its position. If it is moved, the fresh zone can't fill the role of it.

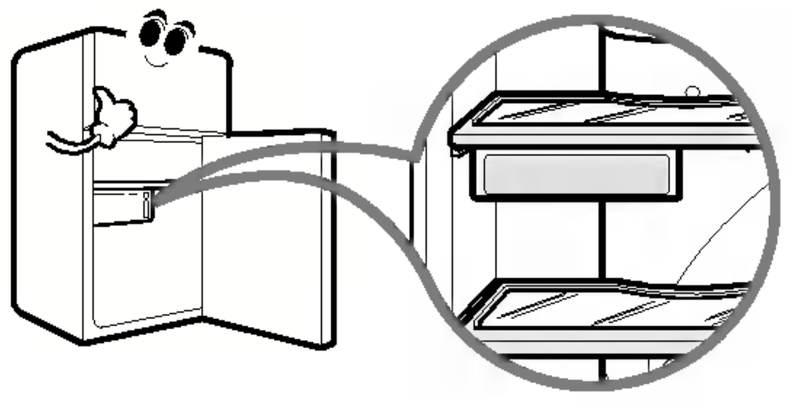

DEFROSTING

- Defrosting takes place automatically.
- The defrosted water flows down to the evaporating tray which located in the lower back side of the refrigerator and is evaporated automatically.

DEODORIZER (OPTIONAL)

- By using an "TiO_2 catalyst," deodorizing performance is guaranteed.
- Unpleasant odor of food in fresh food compartment is deodorized with no harm to you and the food.

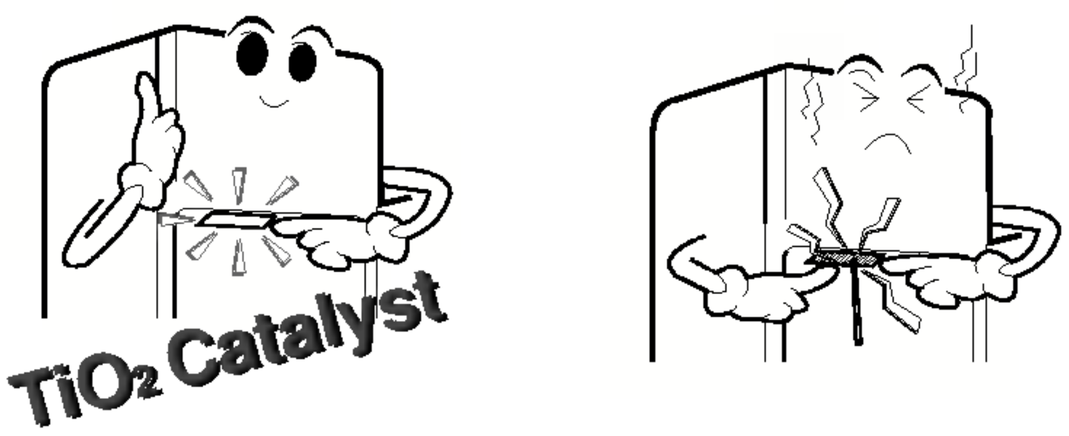

How to use

- As the catalyst is located in cooling air outlet for circulating air in fresh food compartment, there is no need for any handling.
- Do not prick the cooling air outlet with a sharp tip because the deodorizing catalyst may be damaged.
- When storing food with a strong odor, wrap it or store it in a container with a lid because odor may be passed on to other foods.

Re-Using of the catalyst

- Used some length and the odor is strong, the catalyst can be revived and re-used. Separate deodorizer in ceiling of refrigerator compartment, using hair drier to remove moisture or malodor and oxidize under sunlight to decomposing malodor by ultraviolet.

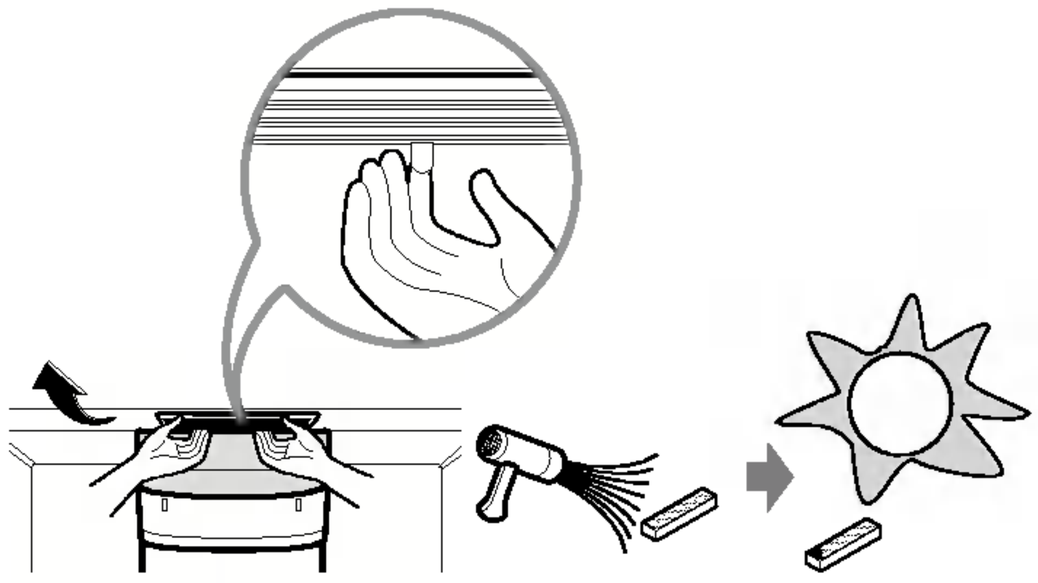

OPERATIONS

EXTRA SHELF (OPTIONAL)

- Pull forward slightly, then push down gently
- As shown pictureA, please pull on a shelf holding the lower part of it.
- As shown pictureB, If you push or pull the shelf holding the upperside of it.your hand can be hurt
- It's very convenient to store the food that need to be saperated.
- Not intended for heavy items.

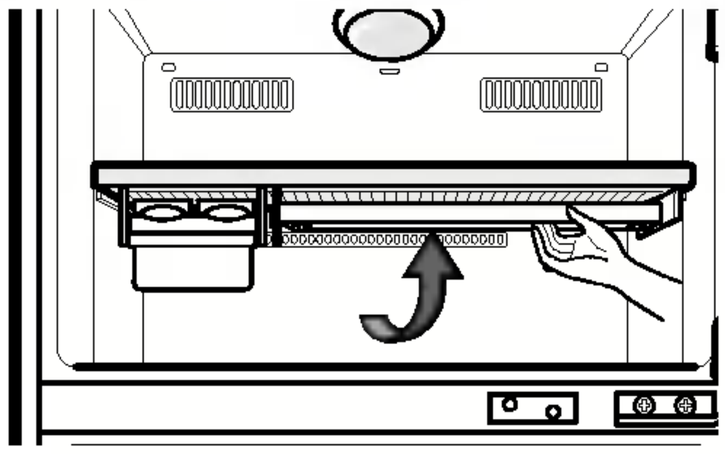

<A>

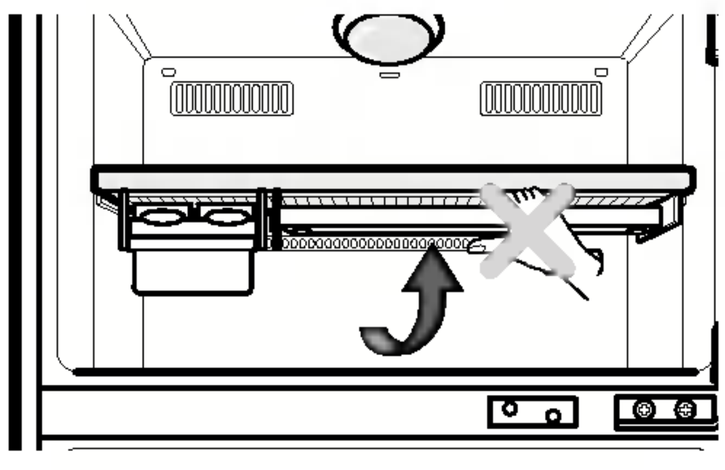

<B>

VITAMIN VEGETABLE DRAWER (OPTIONAL)

- Vitamin KIT used to keep fruits more fresher.
- Please try to keep the kit from getting wet as this would decrease its effectiveness.

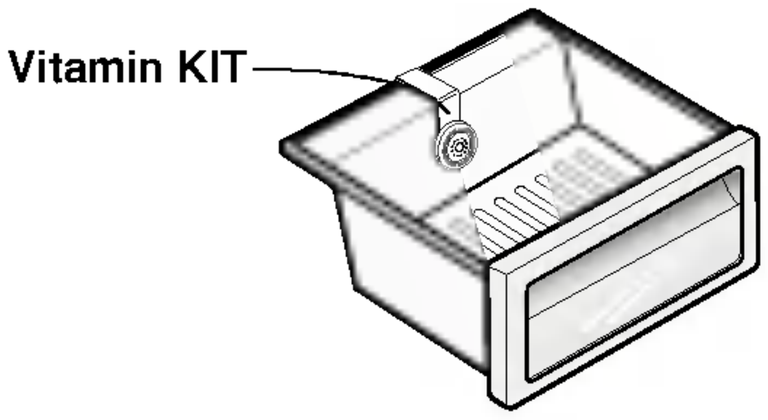

DAIRY CONNER

- Use the moving by pushing right the left with protruded handle.

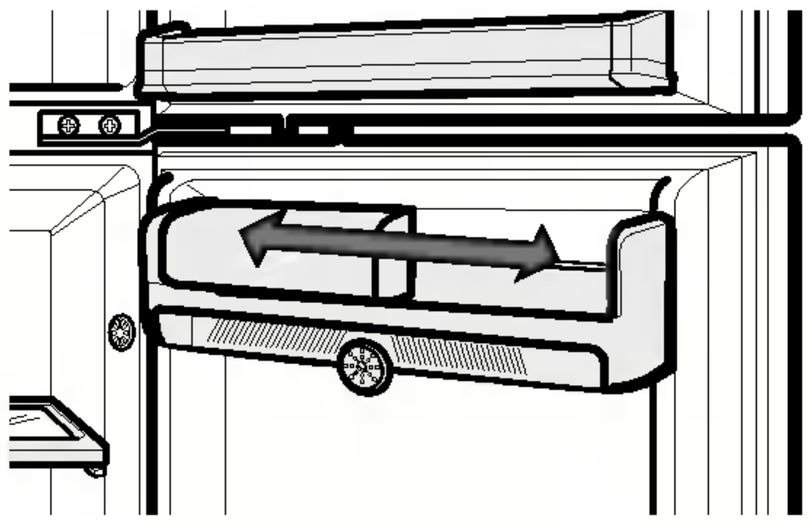

How to remove the cover when you clean

- Push the cover and move it to the center of basket
- Move the cover at the middle of basket and aligh the hole with bothsides of the basket
- After aligning,turn basket from back to front and pull out with both hands.

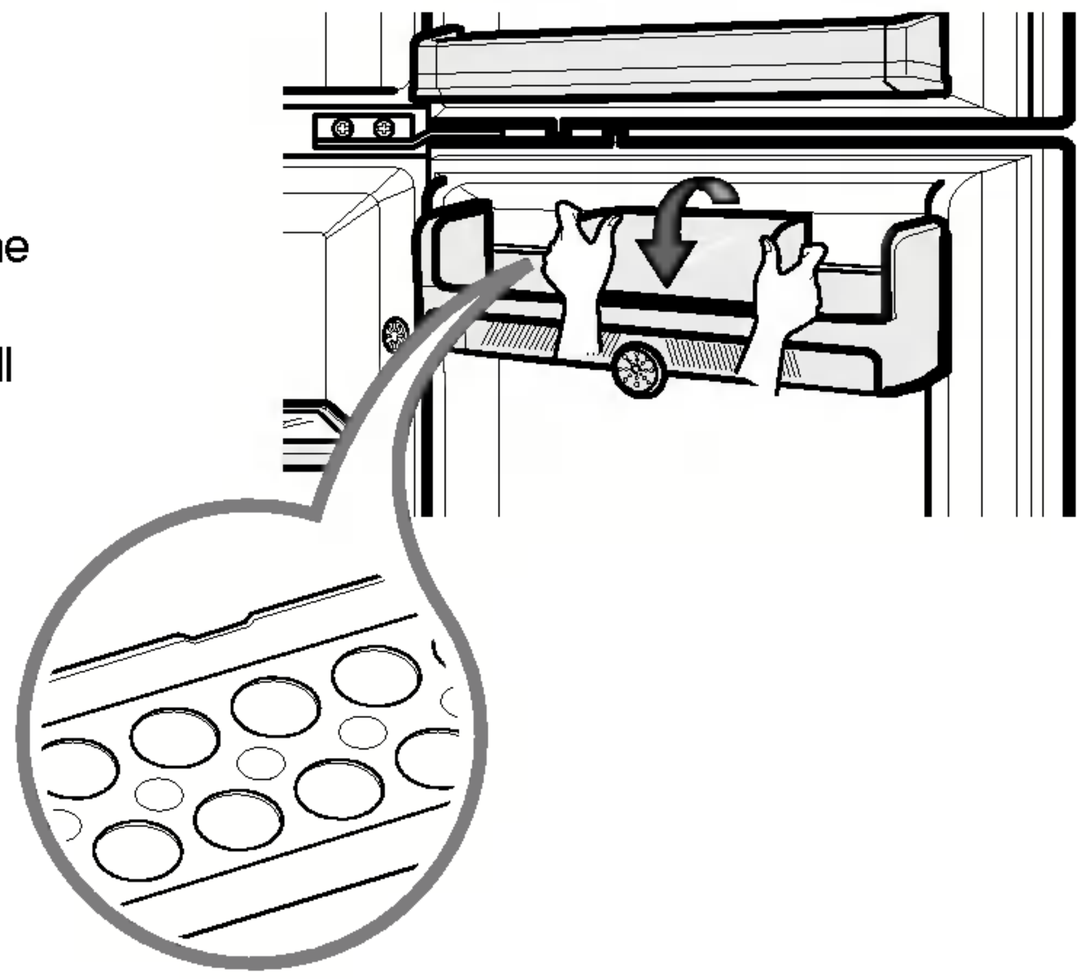

SUGGESTIONS ON FOOD STORAGE

STORING FOOD

- Store fresh food in the refrigerator compartment. How food is frozen and thawed is an important factor in maintaining its freshness and flavor.
- Do not store food which goes bad easily at low temperatures, such as bananas, pineapples, and melons.
- Allow hot food to cool prior to storing. Placing hot food in the refrigerator could spoil other food, and lead to higher electric bills!
- When storing the food, cover it with vinyl wrap or store in a container with a lid. This prevents moisture from evaporating, and helps food to keep its taste and nutrients.
- Do not block air vents with food. Smooth circulation of chilled air keeps refrigerator temperatures even.
- Do not open the door frequently. Opening the door lets warm air enter the refrigerator, and cause temperatures to rise.

FREEZER COMPARTMENT

- Do not store bottles in the freezer compartment - they may break when frozen.
- Do not refreeze food that has been thawed. This causes loss of taste and nutrition.
- When storing frozen food like ice cream for a long period, place it on the freezer shelf, not in the door rack.
- Loading for Freezing - It is recommended to load newly introduced foods on the following position for freezing:

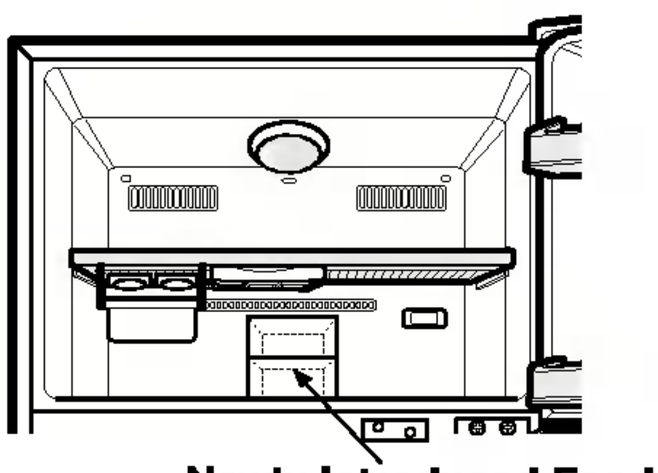

REFRIGERATOR COMPARTMENT

- Avoid placing moist food on deep interior refrigerator shelves, it could freeze upon direct contact with chilled air. To avoid this it is better to store food in the covered container.
- It is desirable to store moist food (especially vegetable and fruit) in the vegetable storage compartment. If it is necessary to store on a shelf of the refrigerator, put it close to the door away from the back wall of the refrigerator to avoid being frozen by the cool circulating in the refrigerator.

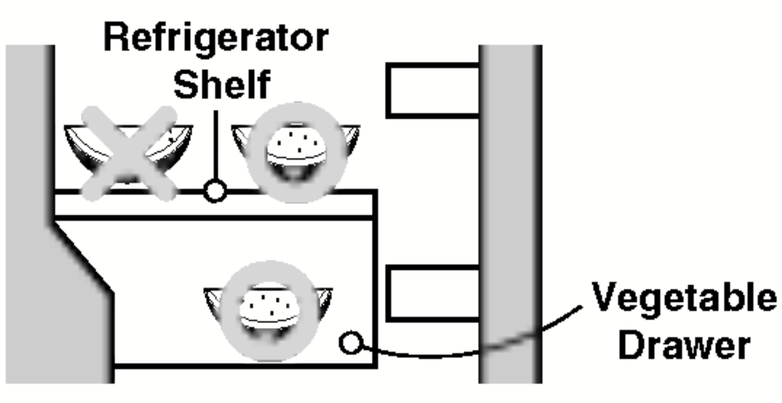

- Always clean food prior to refrigeration. Vegetables and fruits should be washed and wiped, and packed food should be wiped clean, to prevent adjacent food from spoiling.
- When storing eggs in their storage rack, ensure that they are fresh, and always store them in a up-right position, which keeps them fresh longer.

CLEANING

It is important that you refrigerator be kept clean to prevent undesirable odors. Spilled food should be wipe up immediately, since it may acidify and stain plastic surfaces if allowed to settle.

Never use metallic scouring pads, brushes, coarse abrasive cleaners or strong alkaline solutions on any surface.

Before you clean, however, remember that damp objects will stick or adhere to extremely cold surfaces. Do not touch frozen surfaces with wet or damp hands.

EXTERIOR - Use a lukewarm solution of mild soap or dish washable solution to clean the durable finish of your refrigerator. Wipe with a clean, damp cloth and then dry.

INTERIOR - Regular cleaning of the interior and interior parts is recommended. Use a lukewarm solution of mild soap or dish washable solution to clean the durable finish of your refrigerator. Wipe with a clean, damp cloth and then dry.

INTERIOR PARTS - Wash compartment shelves, door racks, storage trays and magnetic door seals etc. Use a lukewarm solution of mild soap or dish washable solution to clean the durable finish of your refrigerator. Wipe with a clean, damp cloth and then dry.

WARNING

Always remove power cord from the wall outlet prior to cleaning in the vicinity of electrical parts(lamps, switches, controls, etc.).
Wipe up excess moisture with a sponge or cloth to prevent water or liquid from getting into any electrical part and causing electric shock.
Do not use flammable or toxic cleaning liquids.

- Caution for Cleaning
  Not in use : Surface active agent, Car wax, Anticorrosive, All sorts of oil, Gasoline, Acids, Wax.
- Usable Detergent Vegetable dish washable solution, Soapy water
- When careless using, it can occur a color change.

GENERAL INFORMATION

VACATION TIME

During average length vacations, you will probably find it best to leave the refrigerator in operation. Place freezable items in freezer for longer life. When you plan to be away for an extended period, remove all food, disconnect the power cord, clean the interior thoroughly, and leave each door OPEN to prevent odor formation.

POWER FAILURE

Most power failures are corrected in an hour or two and will not affect your refrigerator temperatures. However, you should minimize the number of door openings while the power is off. During power failures of longer duration, place a block of dry ice on top of your frozen packages.

IF YOU MOVE

Remove or securely fasten down all loose items inside the refrigerator.
To avoid damaging the leveling screw(s), turn them all the way into the base.

ANTI-CONDENSATION PIPE

The outside wall of the refrigerator cabinet may sometimes get warm, especially just after installation.
Don't be alarmed.
This is due to the anti-condensation pipe, which pumps hot refrigerant to prevent "sweating" on the outer cabinet wall.

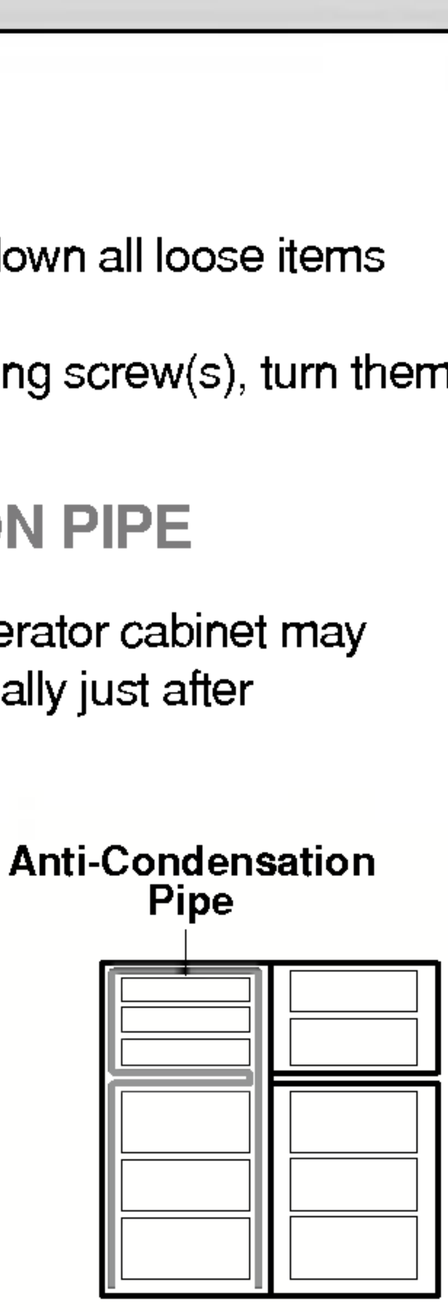

LAMP REPLACEMENT

FREEZER LAMP

To remove the lamp shield inside the freezer compartment, reach behind the shield and pull it forward as shown in the figure on the right.

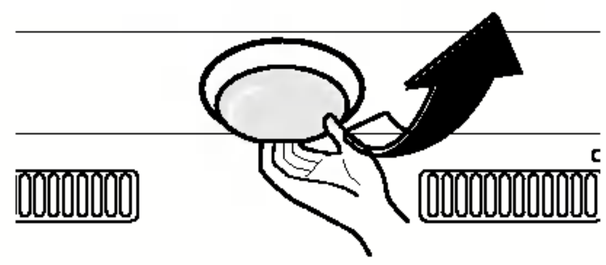

REFRIGERATOR LAMP

To remove the lamp shield inside the refrigerator compartment, pull it down while pressing the triangular area with your thumb and pull it forward as shown in the figure on the right.

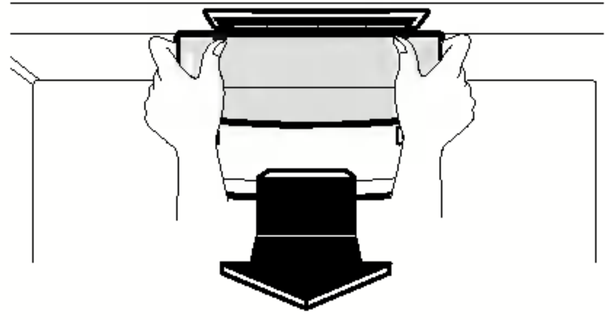

IMPORTANT WARNINGS

DO NOT USE AN EXTENSION CORD

If possible, connect the refrigerator to its own individual electrical outlet to prevent it and other appliances or household lights from causing an overload that could cause a power outage.

ACCESSIBILITY OF SUPPLY PLUG

The refrigerator-freezer should be so positioned that the supply plug is accessible for quick disconnection when accident happens.

SUPPLY CORD REPLACEMENT

If the supply cord is damaged, it must be replaced by the manufacturer or its service agent or a similarly qualified person in order to avoid a hazard.

ABOUT GROUNDING (EARTHING)

In the event of an electric short circuit, grounding (earthing) reduces the risk of electric shock by providing an escape wire for the electric current.

In order to prevent possible electric shock, this appliance must be grounded.

Improper use of the grounding plug can result in an electric shock. Consult a qualified electrician or service person if the grounding instructions are not completely understood, or if you have doubts on whether the appliance is properly grounded.

DO NOT MODIFY OR EXTEND THE POWER CORD LENGTH.

It will cause electric shock or fire.

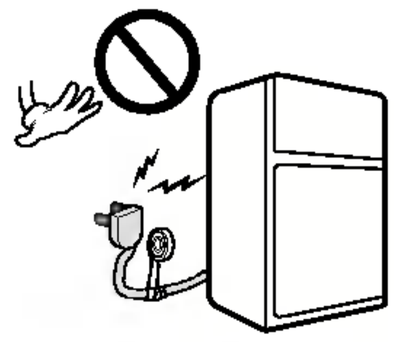

VERY DANGEROUS ATTRACTION

An empty refrigerator can be a dangerous attraction to children. Remove either gaskets, latches, lids or the entire door from your unused appliance, or take some other action to make it harmless.

This appliance must be grounded (earthed).

DON'T WAIT! DO IT NOW!

Do not store inflammable materials, explosives or chemicals in the refrigerator.

BEFORE CALLING FOR SERVICE

SERVICE CALLS CAN OFTEN BE AVOIDED!

IF YOU FEEL YOUR REFRIGERATOR IS NOT OPERATING PROPERLY, CHECK THESE POSSIBLE CAUSES FIRST :

PROBLEM	POSSIBLE CAUSES
REFRIGERATOR DOES NOT OPERATE	• Has a house fuse blown or circuit breaker tripped? • Has the power cord plug been removed or loosened from the electrical wall outlet?
REFRIGERATOR OR FREEZER COMPARTMENT TEMPERATURE TOO WARM	• Temperature control not set on proper position. • Appliance is placed close to wall or heat source. • Warm weather-frequent door openings. • Door left open for a long time. • Large amount of foods are kept in the refrigerator.
ABNORMAL NOISE(S)	• Refrigerator is installed in a weak or uneven place, or leveling screw needs adjusting. • Unnecessary objects placed in the back side of the refrigerator.
REFRIGERATOR HAS ODOR	• Foods with strong odors should be tightly covered or wrapped. • Interior needs cleaning.
DEW FORMS ON THE CABINET SURFACE	• Not unusual during periods of high humidity. • Door may have been left ajar.