DVD/CD RECEIVER

OWNER'S MANUAL

MODEL: LH-T553SB

(Main Unit: LH-T553
Speakers: LHS-55SBS, LHS-55SBC, LHS-55SBW)

Before connecting up, operating or repairing this product, please read this instruction booklet carefully and completely.

P/N: 3834RH0100N

Safety Precautions

CAUTION

RISK OF ELECTRIC SHOCK DO NOT OPEN

CAUTION: TO REDUCE THE RISK OF ELECTRIC SHOCK DO NOT REMOVE COVER (OR BACK) NO USER-SERVICEABLE PARTS INSIDE REFER SERVICING TO QUALIFIED SERVICE PERSONNEL.



This lightning flash with arrowhead symbol within an equilateral triangle is intended to alert the user about the presence of uninsulated dangerous voltage within the product's enclosure that may be of sufficient magnitude to constitute a risk of electric shock to persons.



The exclamation mark within an equilateral triangle is intended to alert the user about the presence of important operating and maintenance (servicing) instructions in the instructions accompanying the product.

WARNING: TO PREVENT FIRE OR ELECTRIC SHOCK HAZARD, DO NOT EXPOSE THIS PRODUCT TO RAIN OR MOISTURE.

WARNING: Do not install this equipment in a confined space such as a book case or similar unit.

CLASS 1 LASER PRODUCT
KLASSE 1 LASER PRODUKT
LUOKAN 1 LASER LAITE
KLASS 1 LASER APPARAT
CLASSE 1 PRODUIT LASER

CAUTION:

This DVD/CD receiver employs a laser system.

To ensure proper use of this product, please read this owner's manual carefully and retain it for future reference. Should the unit require maintenance, contact an authorized service location (see service procedure).

Performing controls, adjustments, or carrying out procedures other than those specified herein may result in hazardous radiation exposure.

To prevent direct exposure to laser beam, do not try to open the enclosure. Visible laser radiation when open. DO NOT STARE INTO BEAM.

CAUTION: The apparatus should not be exposed to water (dripping or splashing) and no objects filled with liquids, such as vases, should be placed on the apparatus.

About the symbols for instructions

⚠ Indicates hazards likely to cause harm to the unit itself or other material damage.

𝒩 Indicates special operating features of this unit.

𝒯 Indicates tips and hints for making the task easier.

Manufactured under license from Dolby Laboratories. "Dolby", "Pro Logic", and the double-D symbol are trademarks of Dolby Laboratories. Confidential Unpublished works. Copyright 1992-1997 Dolby Laboratories. All rights reserved.

Manufactured under license from Digital Theater Systems, Inc. US Pat. No. 5,451,942 5,956,674, 5,974,380, 5,978,762 and other worldwide patents issued and pending. "DTS" and "DTS Digital Surround" are registered trademarks of Digital Theater Systems, Inc. Copyright 1996, 2000 Digital Theater Systems, Inc. All rights reserved.

𝒩 OTES ON COPYRIGHTS:

It is forbidden by law to copy, broadcast, show, broadcast via cable, play in public, or rent copyrighted material without permission.
This product features the copy protection function developed by Macrovision. Copy protection signals are recorded on some discs. When recording and playing the pictures of these discs on a VCR, picture noise will appear.
This product incorporates copyright protection technology that is protected by method claims of certain U.S. patents and other intellectual property rights owned by Macrovision Corporation and other rights owners. Use of this copyright protection technology must be authorized by Macrovision Corporation, and is intended for home and other limited viewing uses only unless otherwise authorized by Macrovision Corporation. Reverse engineering or disassembly is prohibited.

SERIAL NUMBER: The serial number is located on the back of this unit. This number is unique to this unit and not available to others. You should record requested information here and retain this guide as a permanent record of your purchase.

Model No. _____

Serial No. _____

Table of Contents

Introduction

Safety Precautions 2
Table of Contents 3
Before Use 4-5
Playable Discs 4
Precautions 5
Notes on Discs 5
About Symbols 5
Front Panel and Rear Panel 6
Remote Control Overview 7

Preparation

Connections 8-11
TV Connections 8
Optional Equipment Connections 9
Aerial Connections 9
Speaker System Connection 10
Speaker Positioning 11
Before Operation 12-17
Mini Glossary for Audio Stream & Surround Mode 12
Sound Mode 12
On-Screen Display 13
Initial Settings 14-17
- General Operation 14
- Language 14
- Display 14-15
- Audio 15
- Lock (Parental Control) 16
- Others 17

Operation

DVD or Video CD Operation 17-20
Playing a DVD and Video CD 17
General Features 18-20
- Moving to another TITLE/GROUP 18
- Moving to another CHAPTER/TRACK 18
- Slow Motion 18
- Still Picture and Frame-by-Frame Playback . 18
- Search 18
- Repeat 18
- Repeat A-B 19
- Time Search 19
- Marker Search 19
- Zoom 19

Special DVD Features 20
- Title Menu 20
- Disc Menu 20
- Changing the Audio Language 20
- Changing the Audio Channel 20
- Subtitles 20

DVD Audio Discs 20
Audio CD and MP3/WMA Disc 21
Playing an Audio CD and MP3/WMA Disc 21
- Pause 21
- Moving to another Track 21
- Repeat Track/All/Off 21
- Search 21

JPEG Disc Operation 22
Viewing a JPEG disc 22
- Slide Show 22
- Still Picture 22
- Moving to another file 22
- To rotate picture 22

Programmed Playback 23
Repeat Programmed Tracks 23
Erasing a Track from Programme List 23
Erasing the Complete Programme List 23
DivX Disc Operation 24
Speaker Setup 25
Additional Information 26
Last Condition Memory 26
Screen Saver 26
System Select 26
Controlling the TV 26
Operation with Radio 27
Presetting the radio stations 27
Listening to the radio 27
Other Functions 28
Sleep Timer Setting 28
Dimmer 28
Mute 28
Using the Headphone Jack 28
Selecting the Input Source 28
XTS (Excellent True Sound) 28
XTS pro 28

Reference

Language Code List 29
Country Code List 29
Troubleshooting 30-31
Specifications 32

Playable Discs

DVD VIDEO	DVD (8 cm / 12 cm disc)
DVD AUDIO	DVD audio discs (8 cm / 12 cm disc)
COMPACT disc DIGITAL VIDEO	Video CD (VCD) (8 cm / 12 cm disc)
COMPACT disc DIGITAL AUDIO	Audio CD (8 cm / 12 cm disc)

In addition, this unit can play a DVD-RW, DVD+RW, SVCD and CD-R or CD-RW that contains audio titles, MP3, WMA, JPEG or DivX files.

Notes

- Depending on the conditions of the recording equipment or the CD-R/RW (or DVD-RW, DVD+RW) disc itself, some CD-R/RW (or DVD-RW, DVD+RW) discs cannot be played on the unit.
- Do not attach any seal or label to either side (the labeled side or the recorded side) of a disc.
- Do not use irregularly shaped CDs (e.g., heart-shaped or octagonal). It may result in malfunctions.

Notes on DVDs and Video CDs

Some playback operations of DVDs and Video CDs may be intentionally fixed by software manufacturers. As this unit plays DVDs and Video CDs according to disc content designed by the software manufacturer, some playback features of the unit may not be available or other functions may be added.
Make sure to also refer to the instructions supplied with the DVDs and Video CDs. Some DVDs made for business purposes may not be able to be played on the unit.

Regional code of the DVD/CD receiver and DVDs

This DVD/CD Receiver is designed and manufactured for playback of region “3” encoded DVD software.
The region code on the labels of some DVDs indicates which type of player can play those discs. This unit can only play DVDs labeled “3” or “ALL”. If you try to play any other discs, the message “Check Regional Code” will appear on the TV screen. Some DVDs that have no region code label may still be subject to area restrictions and therefore not playable.



Note on DTS-encoded CDs

When playing DTS-encoded CDs, excessive audio level may be heard from the analog stereo output. To avoid possible damage to the audio system, turn down the volume before playing back such discs, adjust the volume gradually, and keep the volume level low. To enjoy DTS Digital Surround™ playback, an external 5.1 channel DTS Digital Surround™ decoder system must be connected to the digital output of the unit.

Disc-related terms

Title (DVD only)
The main film content or accompanying feature content or additional feature content, or music album.
Each title is assigned a title reference number enabling you to locate it easily.

Chapter (DVD only)
Sections of a picture or a musical piece that are smaller than titles. A title is composed of one or several chapters. Each chapter is assigned a chapter number, enabling you to locate the chapter you want. Depending on the disc, chapters may not be recorded.

Group (DVD audio discs only)
The main audio content or accompanying feature content or additional feature content, or music album. Each group is assigned a group reference number enabling you to locate it easily.

Scene (VCD)
On a Video CD with PBC (Playback control) functions, moving pictures and still pictures are divided into sections called “Scenes”. Each scene is displayed in the menu screen and assigned a scene number, enabling you to locate the scene you want.
A scene is composed of one or several tracks.

Types of Video CDs

There are two types of Video CDs:

Video CDs equipped with PBC (Version 2.0)
PBC (Playback control) functions allow you to interact with the system via menus, search functions, or other typical computer-like operations. Moreover, still pictures of high resolution can be played if they are included in the disc.

Video CDs not equipped with PBC (Version 1.1)
Operated in the same way as audio CDs, these discs allow playback of video pictures as well as sound, but they are not equipped with PBC.

Precautions

Handling the unit

When shipping the unit
The original shipping carton and packing materials may come in handy. For maximum protection, re-pack the unit as it was originally packed at the factory.

When setting up the unit
The picture and sound of a nearby TV, VCR, or radio may be disturbed during playback. In this case, position the unit away from the TV, VCR, or radio, or turn off the unit after removing the disc.

To keep the exterior surfaces clean
Do not use volatile liquids, such as insecticide spray, near the unit. Do not leave rubber or plastic products in contact with the unit for a long period of time. They will leave marks on the surface.

Cleaning the unit

To clean the cabinet
Use a soft, dry cloth. If the surfaces are extremely dirty, use a soft cloth lightly moistened with a mild detergent solution. Do not use strong solvents such as alcohol, benzene, or thinner, as these might damage the surface of the unit.

To obtain a clear picture
The DVD/CD Receiver is a high-tech, precision device. If the optical pick-up lens and disc drive parts are dirty or worn, the picture quality will be poor.
Regular inspection and maintenance are recommended after every 1,000 hours of use. (This depends on the operating environment.)
For details, please contact your nearest dealer.

Notes on Discs

Disc Handling

Do not touch the playback side of the disc.
Hold the disc by the edges so that fingerprints will not get on the surface.
Do not stick paper or tape on the disc.

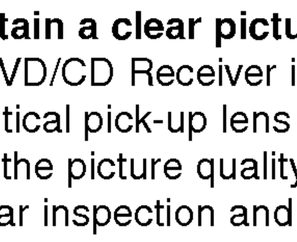

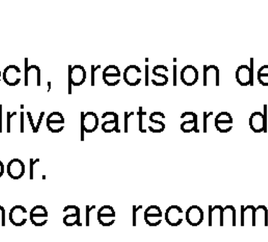

Storing discs

After playing, store the disc in its case.
Do not expose the disc to direct sunlight or sources of heat, or leave it in a parked car exposed to direct sunlight, as there may be a considerable temperature increase inside the car.

Cleaning discs

Fingerprints and dust on the disc can distort the picture or reduce sound quality. Before playing, clean the disc with a clean cloth. Wipe the disc from the centre outwards.

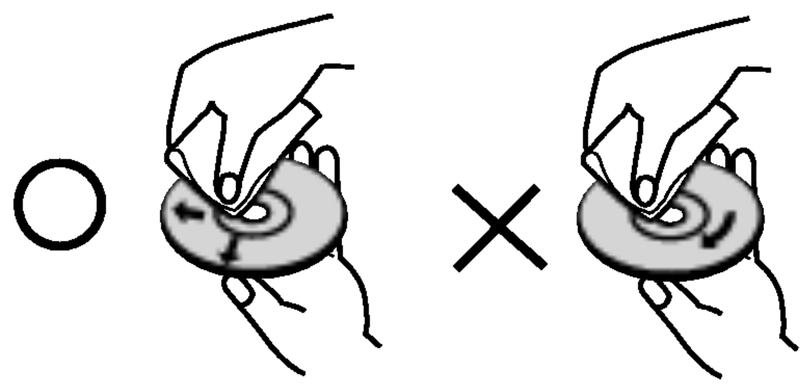

Do not use strong solvents such as alcohol, benzene, thinner, commercially available cleaners, or anti-static spray intended for vinyl records.

About Symbols

About the ✋ symbol display

"✋" may appear on the TV screen during operation. This icon means the function explained in this owner's manual is not available on that specific DVD-Video disc.

About the disc symbols for instructions

A section whose title has one of the following symbol is applicable only to the disc represented by the symbol.

- DVD-V — DVD and finalized DVD±R/RW.
- DVD-A — DVD Audio discs.
- VCD2.0 — Video CDs with the PBC (playback control) function.
- VCD1.1 — Video CDs without the PBC (playback control) function.
- CD — Audio CDs.
- MP3 — MP3 disc.
- WMA — WMA disc.
- JPEG — JPEG disc.
- DivX — DivX disc.

Front Panel and Rear Panel

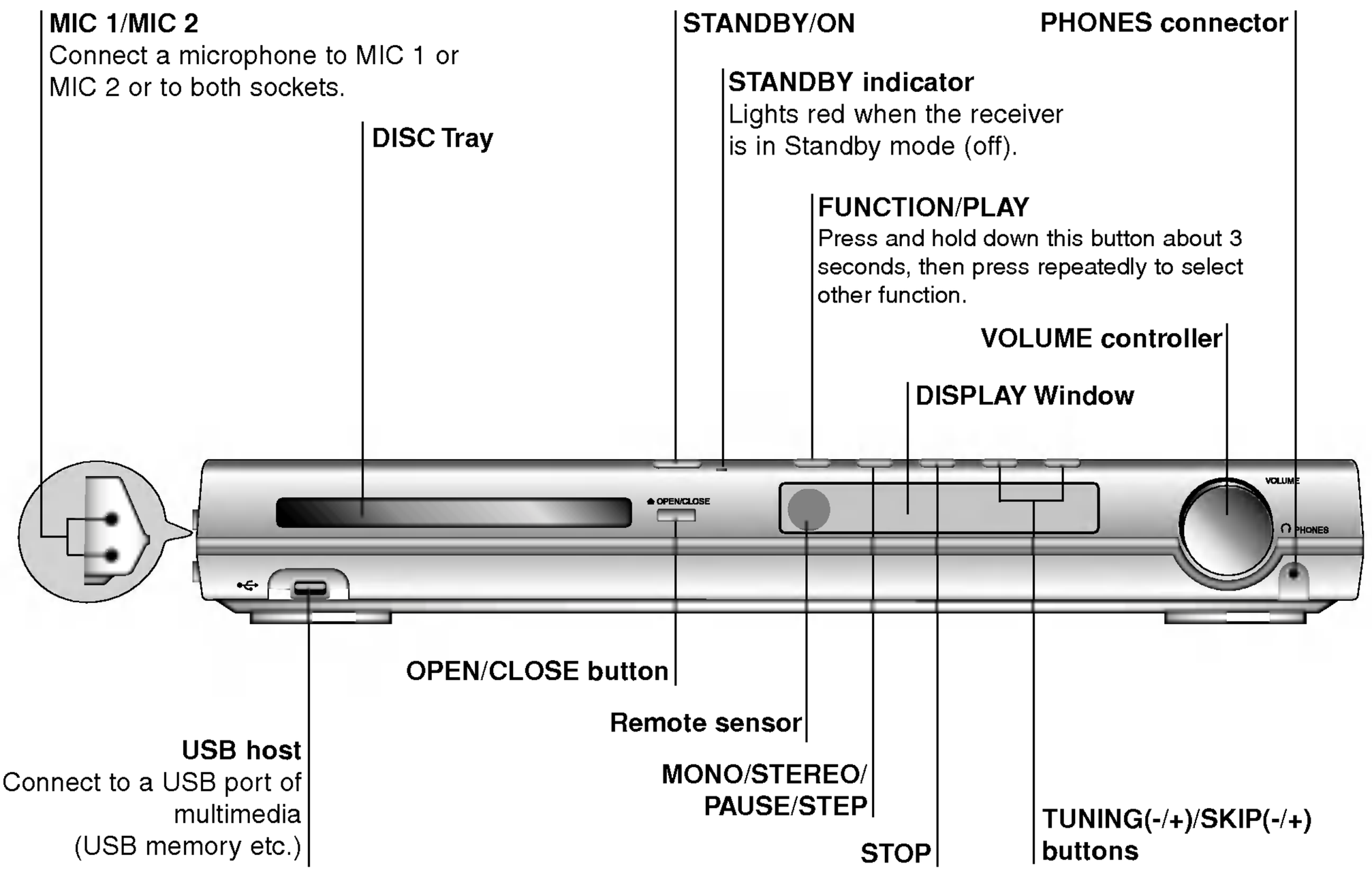

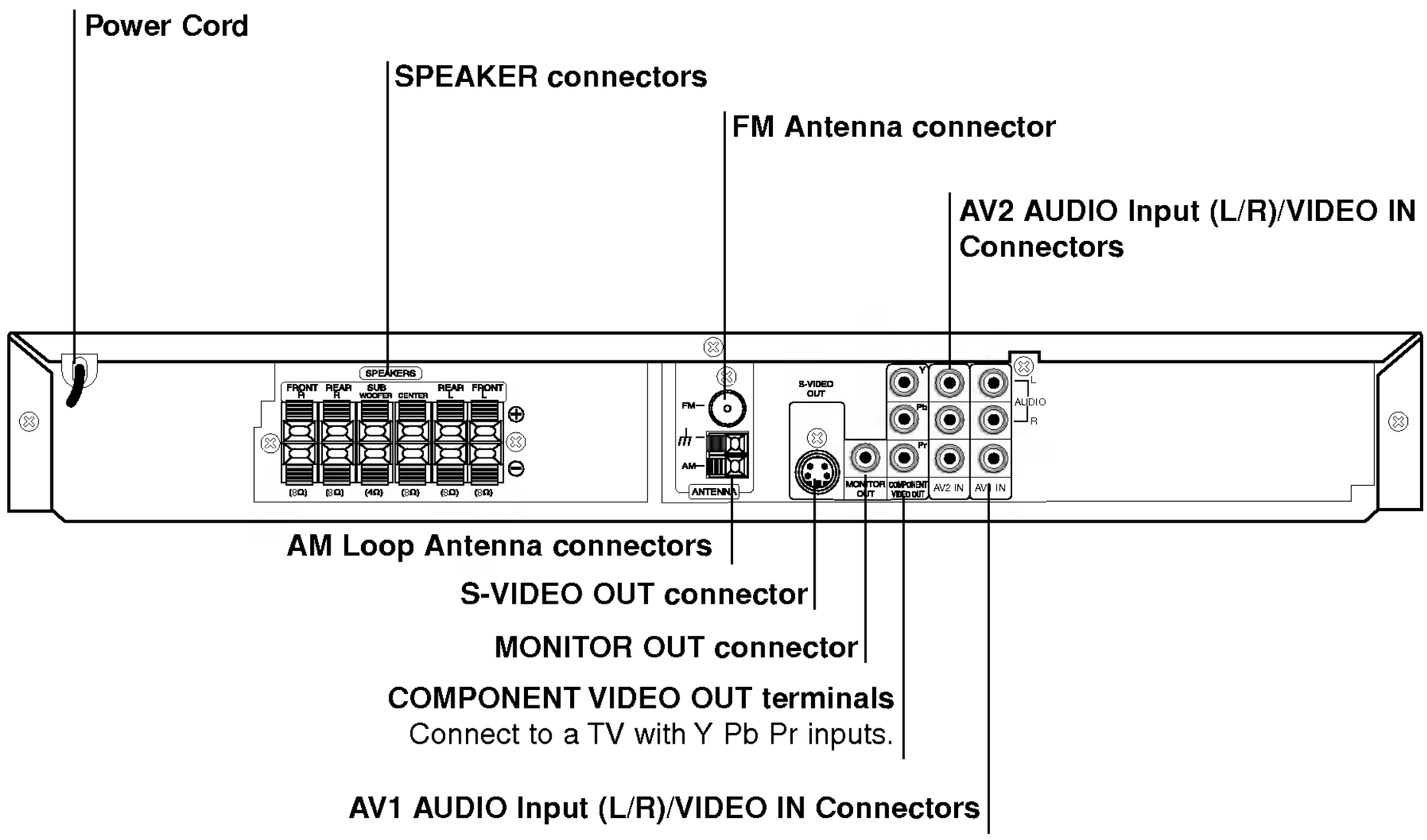

⚠

Do not touch the inner pins of the jacks on the rear panel. Electrostatic discharge may cause permanent damage to the unit.

Remote Control Overview

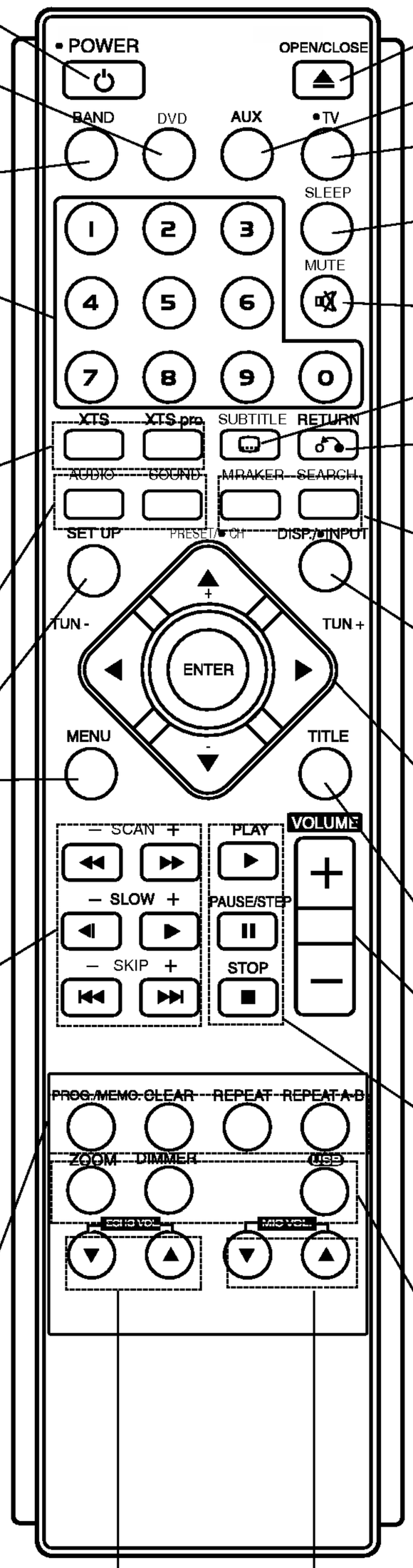

POWER

DVD

Select the output source (CD/DVD) or accesses

BAND

Select the System's tuner (FM and AM bands)

0-9 numerical buttons

Select a service, programme number directly or select numbered options in a menu.

XTS pro •

To enjoy more natural and realistic sound.

XTS •

To enjoy great sound effect.

AUDIO •

Selects an audio language (DVD) or an audio channel (CD).

SOUND MODE •

Selects the sound mode.

SETUP

Accesses or removes setup menu .

MENU

Accesses the menu on a DVD disc.

SCAN-/+(◀◀/▶▶) •

Search backward or forward.

SLOW-/+(◀I/I▶) •

Reverse/ Forward slow playback.

REVERSE SKIP(I◀◀) •

Search backward*/go to beginning of current chapter or track or go to previous chapter or track.

FORWARD SKIP(▶▶I) •

Search forward*/go to next chapter or track.

PROG. •

Accesses or removes Program menu.

MEMO. •

Enter a radio station's frequency into the tuner.

CLEAR •

Removes a track number on the program menu or a mark on the MARKER SEARCH menu.

REPEAT •

Repeat chapter, track, title, all.

REPEAT A-B •

Repeats sequence.

OPEN/CLOSE (⏏)

Opens and closes the disc tray.

AUX

Selects input source.

TV

To control the TV. (LG TV only)

SLEEP

Set the System to turn off automatically. at a specified time.

MUTE

Mute the speakers.

SUBTITLE

Selects a subtitle language (DVD).

RETURN

Removes the setup menu.

- **MARKER**
  Marks a point during playback.
- **SEARCH**
  Displays MARKER SEARCH menu.
- **DISPLAY**
  Accesses On-Screen display.
- **INPUT**
  Selects the TV's source.
- **◀/▶/▲/▼ (left/right/up/down)**
  Selects an option in the menu.
- **ENTER**
  Acknowledges the menu selection.
- **PRESET/CH(+/-) (▲/▼):**
  Select programme of TV or Radio.
- **TUN(-/+) (◀/▶):**
  To tune in the desired radio station.

TITLE

Displays the disc's Title menu, if available.

VOLUME (+/-)

To adjust speaker volume and TV volume.

- **PLAY (▶)**
  Starts playback.
- **PAUSE/STEP (II)**
  Pause playback
- **STOP (■)**
  Stops playback.
- **ZOOM**
  Enlarges the DVD video image.
- **DIMMER**
  Press to change brightness of the display window on the front panel dur-ing in power-on status.
- **USB**
  To enjoy the multimedia files.

ECHO VOL.(▼/▲)

Adjusts echo volume.

MIC VOL.(▼/▲)

Adjusts microphone volume.

Remote Control Operation Range

Point the remote control at the remote sensor and press the buttons.

- **Distance:** About 23 ft (7 m) from the front of the remote sensor
- **Angle:** About 30° in each direction in front of the remote sensor

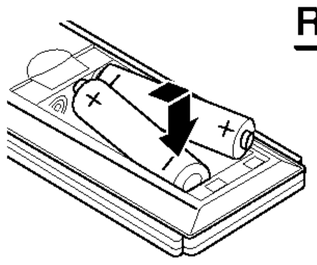

Remote control battery installation

Remove the battery cover on the rear of the remote control, and insert two R03 (size AAA) batteries with ⊕ and ⊖ aligned correctly.

⚠ Caution

Do not mix old and new batteries. Never mix different types of batteries (standard, alkaline, etc.).

Connections

TV Connections

- Make one of the following connections, depending on the capabilities of your existing equipment.

Tips

- Depending on your TV and other equipment you wish to connect, there are various ways you could connect the DVD/CD Receiver. Use one of the connection methods described below.
- Please refer to the manuals of your TV, VCR, Stereo System or other devices as necessary to make the best connections.

Caution

- Make sure the DVD/CD Receiver is connected directly to the TV. Select the correct AV input on your TV.
- Do not connect your DVD/CD Receiver to TV via your VCR. The DVD image could be distorted by the copy protection system.

S-Video connection

Connect the S-VIDEO OUT jack on the DVD/CD Receiver to the S-VIDEO IN jack on the TV using the S-Video cable **(S)**.

Video connection

Connect the MONITOR OUT jack from the DVD/CD Receiver to the VIDEO IN jack on the TV using the video cable supplied **(V)**.

Component Video (Color Stream®) connection

Connect the COMPONENT VIDEO OUT jacks from the DVD/CD Receiver to the corresponding in jacks on the TV using an Y Pb Pr cable **(C)**.

Progressive Scan (ColorStream® pro) connection

- If your television is a high-definition or "digital ready" television, you may take advantage of the DVD/CD Receiver's progressive scan output for the highest video resolution possible.
- If your TV does not accept the Progressive Scan format, the picture will appear scrambled if you try Progressive Scan on the DVD/CD Receiver.

Connect the COMPONENT VIDEO OUT jacks from the DVD/CD Receiver to the corresponding in jacks on the TV using an optional Y Pb Pr cable **(C)**.

Rear of TV

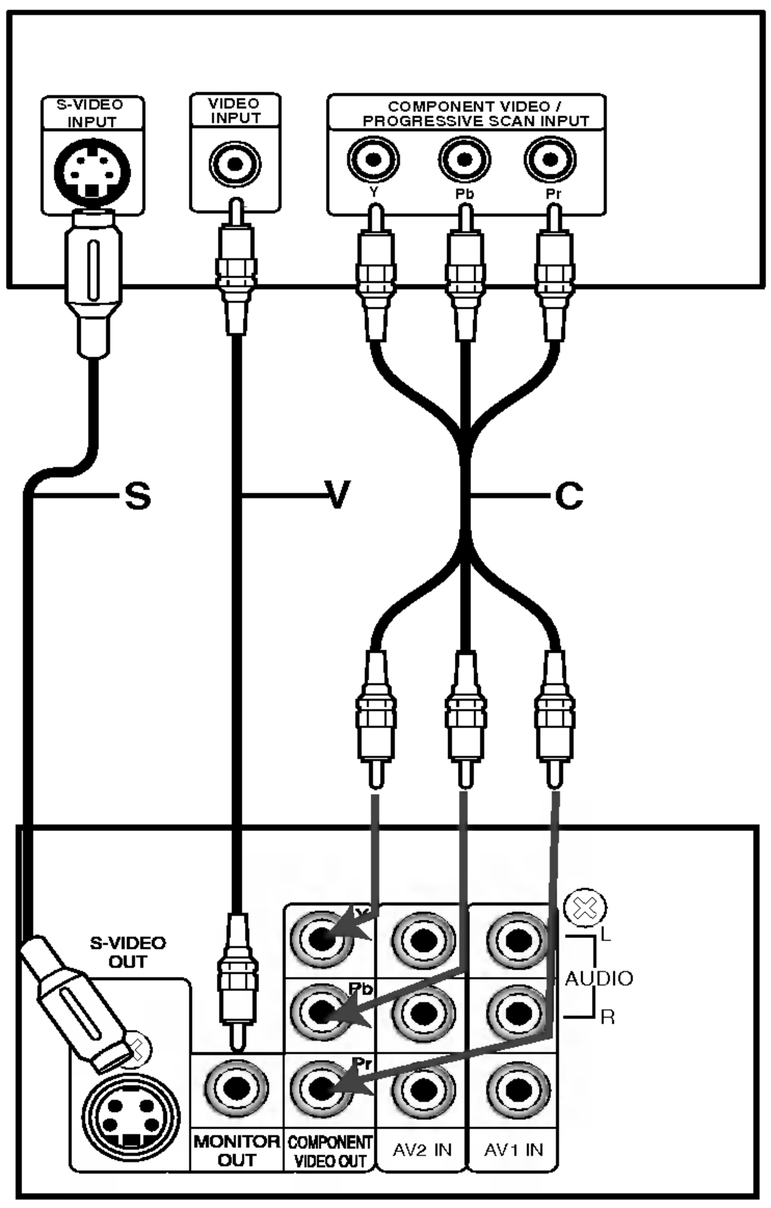

Rear of DVD/CD Receiver

Notes

- Set the Progressive to "On" on the Setup menu for progressive signal, see page 15.
- Set the progressive to "Off" by removing any disc from the unit and close the disc tray. see that "no disc" is displayed on the display window. Then, press STOP and hold it for five seconds before releasing it.
- Progressive scan does not work with the analog video connections (yellow VIDEO OUT jack) or S-VIDEO connection.

Connections (Continued)

Optional Equipment Connections

1 Connect a VCR to the AV1 IN connectors.

2 Connect a additional VCR to the AV2 IN connectors.

3 Connect the USB port of a USB Memory (or MP3 player, etc.) to the USB HOST on the front of the unit.

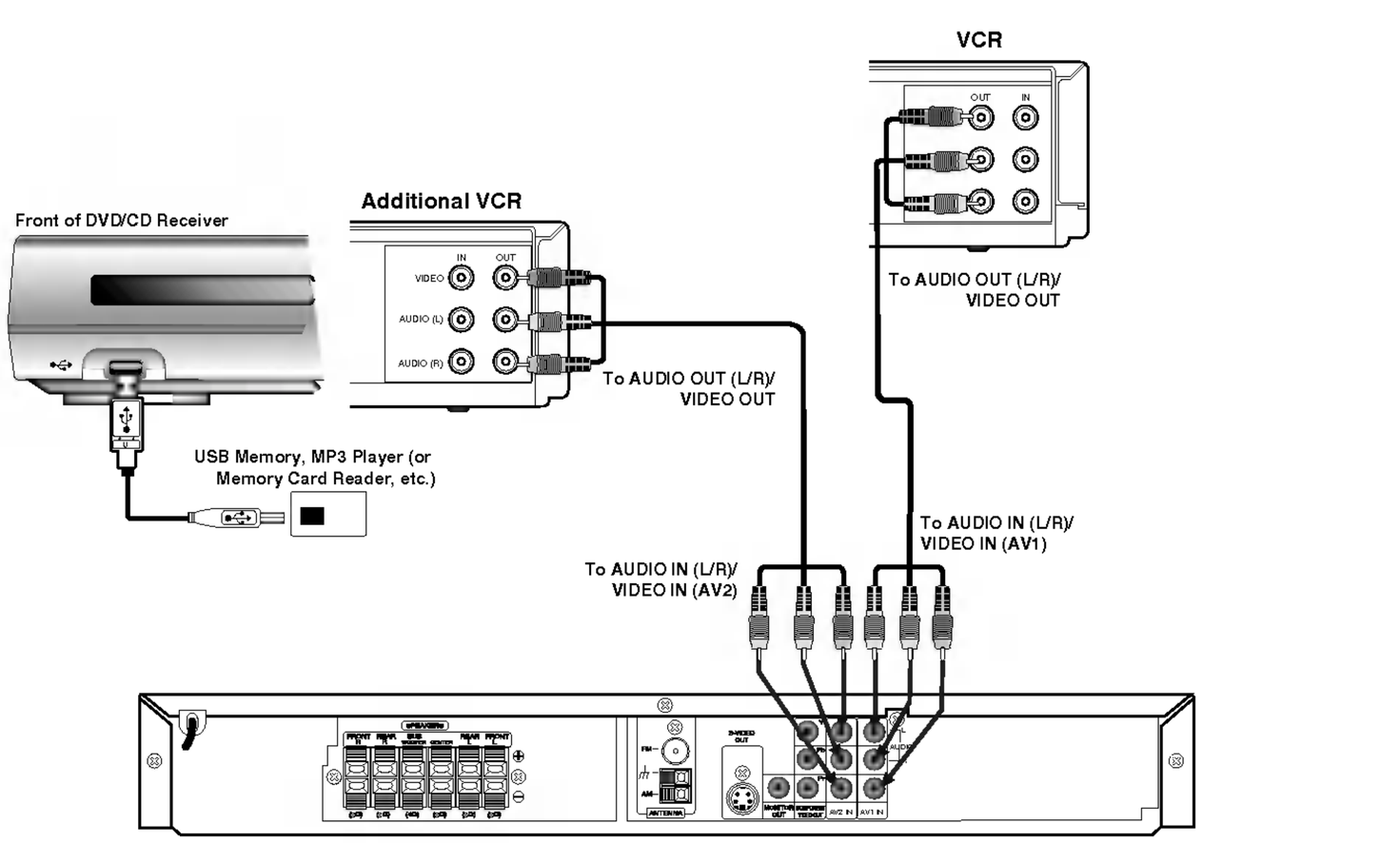

Notes

- If the audio format of the digital output does not match the capabilities of your DVD/CD Receiver, the receiver will produce a strong, distorted sound or no sound at all.
- The DivX files in your memory card will not be able to be play.

Aerial Connections

Connect the supplied FM/AM aerial for listening to the radio.

- Connect the AM Loop aerial to the AM aerial connector.
- Connect the FM Wire aerial to the FM aerial connector.

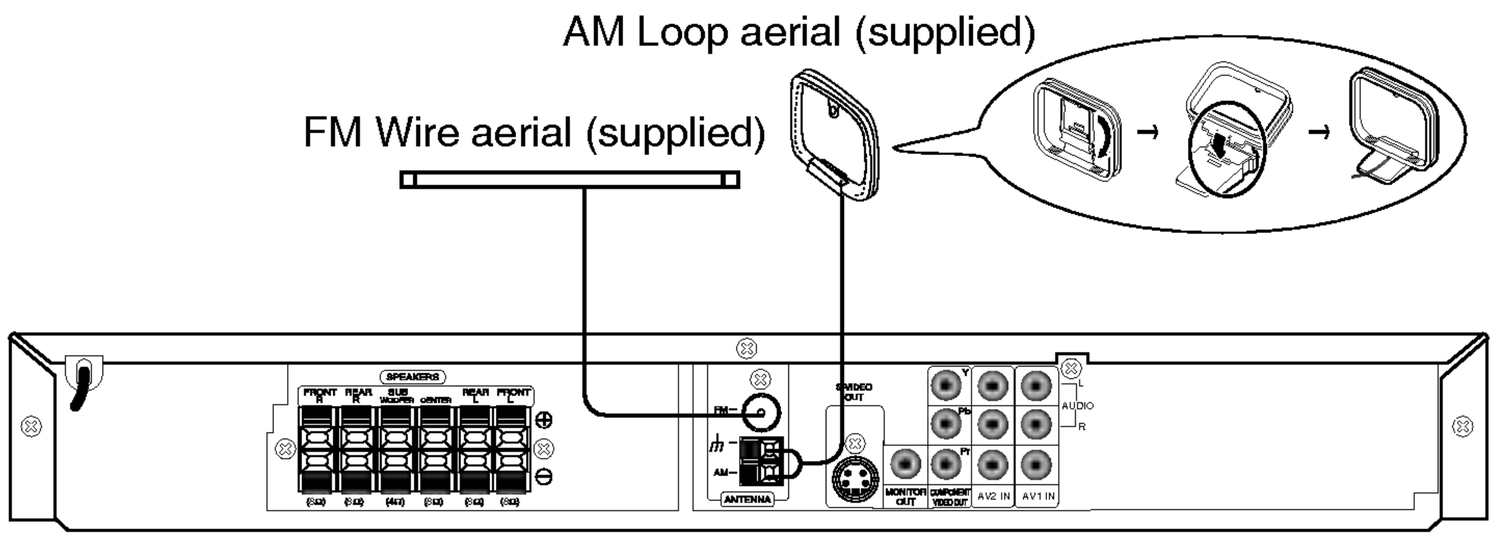

Notes

- To prevent noise pickup, keep the AM Loop aerial away from the DVD/CD Receiver and other components.
- Be sure to fully extend the FM wire aerial.
- After connecting the FM Wire aerial, keep it as horizontal as possible.

Speaker System Connection

Connect the speakers using the supplied speaker cords.

To obtain the best possible surround sound, adjust the speaker parameters (volume, distance, etc.).

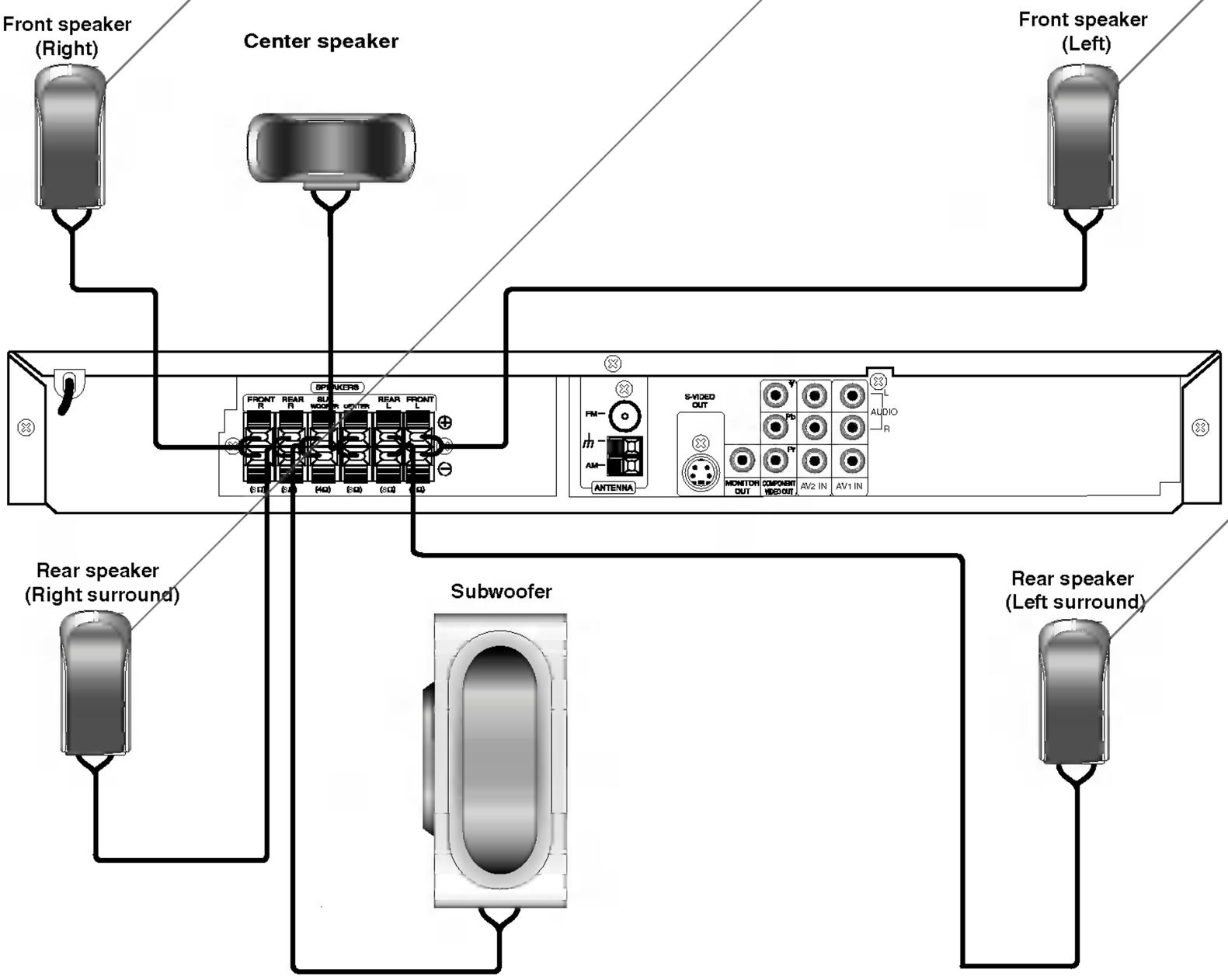

Notes

- Be sure to match the speaker cable to the appropriate terminal on the components: + to + and – to –.
  If the cables are reversed, the sound will be distorted and will lack base.
- If you use front speakers with low maximum input rating, adjust the volume carefully to avoid excessive output on the speakers.
- Do not remove the front cover of supplied speaker.

Speaker Positioning

In the case of normal position use the 6 speakers (2 front speakers, centre speaker, 2 rear speakers and sub-woofer). If you want to play the excellent bass sound, DTS digital surround or Dolby Digital surround, you should connect a subwoofer.

- **Front speakers**
  According to your listening position set up the speakers for equal distance. And by hearing position set up the interval between speakers to 45 degree.
- **Centre speaker**
  The centre speakers and front speakers are ideally the same height. But normally place it above or below the television.
- **Rear speakers**
  Place left and right behind the listening area. These speakers recreate sound motion and atmosphere required for surround sound playback. For best results, do not install the rear speakers too far behind the listening position and install them at or above the level of the listener's ears. It is also effective to direct the rear speakers towards a wall or ceiling to further disperse the sound.
  In the case of a smaller room size, if the audience is near to the rear wall set the rear speakers opposite each other, and set the rear speakers above 60 - 90 cm than the listener's ears.
- **Subwoofer**
  This can be placed in any front position.

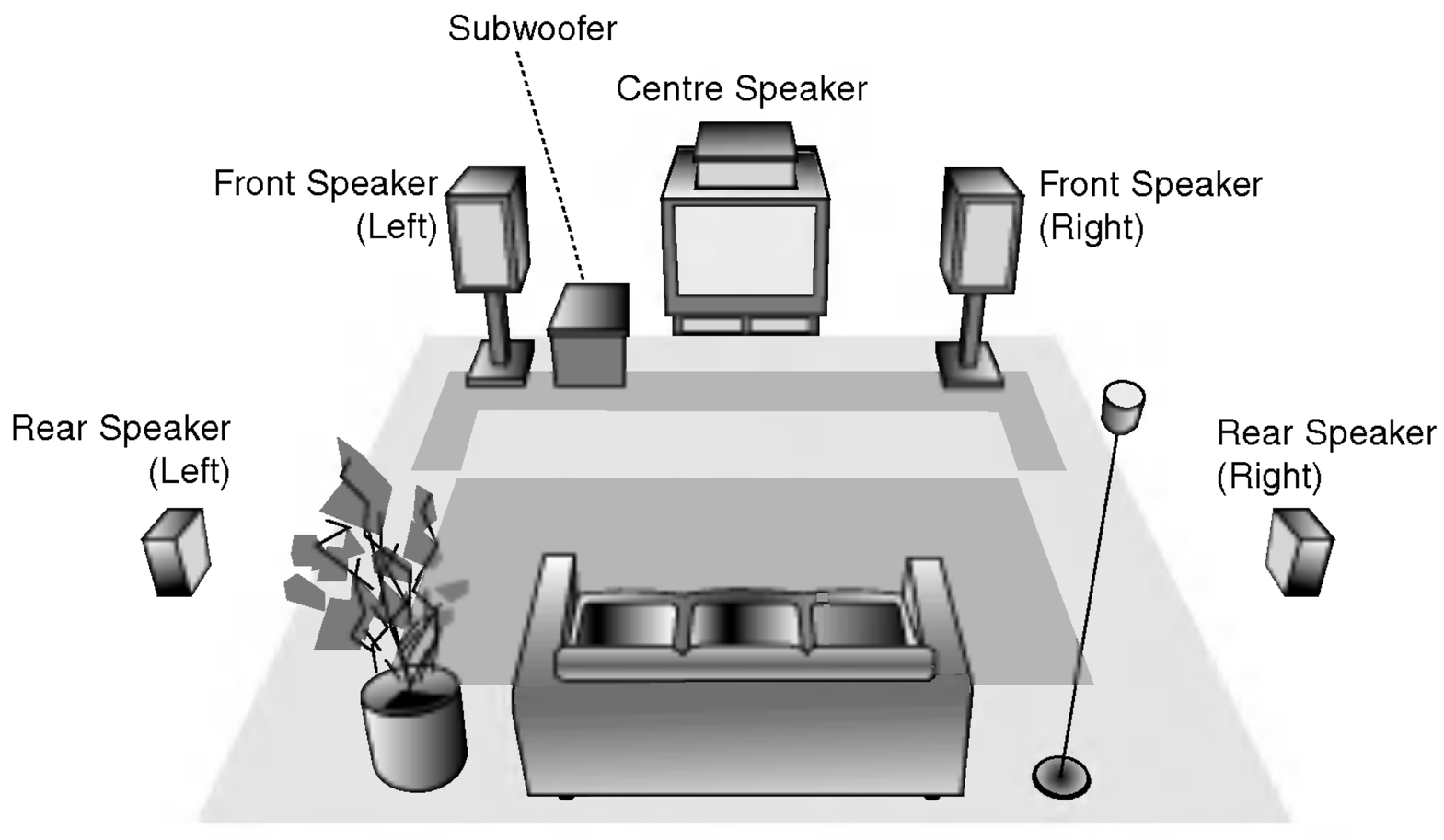

Speaker Positioning Example

Mini Glossary for Audio Stream & Surround mode

dts

Allows you to enjoy 5.1(or 6) discrete channels of high quality digital audio from DTS program sources such as discs, DVD and compact discs, etc.bearing the trade-mark. DTS Digital Surround delivers up to 6 channels of transparent audio(which means identical to the original masters) and results in exceptional clarity throughout a true 360 degree sound field. The term DTS is a trade-mark of DTS Technology, LLC. Manufactured under license from DTS Technology, LLC.

DIGITAL

The Dolby Digital surround format lets you enjoy up to 5.1 channels of digital surround sound from a Dolby Digital program source. If you play DVDs with " " mark, you can enjoy even better sound quality, greater spatial accuracy, and improved dynamic range.

PRO LOGIC (II)

Dolby Pro Logic II creates five full-bandwidth output channels from two-channel sources. This is done using an advanced, high-purity matrix surround decoder that extracts the spatial properties of the original recording without adding any new sounds or tonal colorations.

MOVIE mode:
The Movie mode is for use with stereo television shows and all programs encoded in Dolby Surround. The result is enhanced soundfield directionality that approaches the quality of discrete 5.1-channel sound.

MUSIC mode:
The Music mode is for use with any stereo music recordings.

MATRIX mode:
The Matrix mode is the same as the Music mode except that the directional enhancement logic is turned off. It may be used to enhance mono signals by making them seem "larger." The Matrix mode may also find use in auto systems, where the fluctuations from poor FM stereo reception can otherwise cause disturbing surround signals from a logic decoder. The ultimate "cure" for poor FM stereo reception may be simply to force the audio to mono.

BYPASS

Software with multichannel surround audio signals is played according to the way it was recorded.

Sound Mode DVD VCD2.0 VCD1.1 CD

You can enjoy surround sound simply by selecting one of the pre-programmed sound fields according to the program you want to listen to.

When DVD is inserted

You can change the Digital Audio Output mode by pressing the **AUDIO** button on the remote control during playback. Although the DVD contents differ from disc to disc, the following explains the basic operation when this feature is used.

a) After you select 2 channel (For example 2 ENG D 2 CH or 3 ENG D 2 CH) by pressing AUDIO button, press SOUND button repeatedly.

Bypass ↔ Movie ↔ Music ↔ Matrix

b) After you select 5.1 channel (For example 1 ENG D 5.1 CH or 4 ENG DTS 5.1 CH) by pressing AUDIO button, press SOUND button.
- " " indicator will be displayed on the TV screen.
- "BYPASS" indicator will be only displayed on the display window.

When Video CD is inserted

Each time you press SOUND button, the sound mode of Video CD is changed on the display window in the following order.

BYPASS → STUDIO → CLUB → HALL →
THEATER 1 → CHURCH → PL II MOVIE →
PL II MUSIC → PL II MTRX → BYPASS...

Note

After you select the "Bypass" of sound mode by pressing SOUND button, press AUDIO button.
The Left, Right and Stereo of audio channel will be displayed on the TV screen.

When CD is inserted

Each time you press SOUND button, the sound mode of Audio CD is changed on the display window in the following order.

BYPASS → STUDIO → CLUB → HALL →
THEATER 1 → CHURCH → PL II MOVIE →
PL II MUSIC → PL II MTRX → BYPASS...

For your reference

- **You can identify the encoding format of program software by looking at its packaging.**
  - Dolby Digital discs are labeled with the logo.
  - Dolby Surround encoded programs are labeled with the logo.
  - DTS Digital Surround discs are marked with DTS.

Notes

- When you play sound tracks with 96kHz sampling frequency, the output signals will be converted to 48kHz (sampling frequency).
- When you use a microphone, you can't enjoy 5.1 channel output. Only 2 channel sound will out by the influence of the microphone system.

On-Screen Display

You can display the general playback status on the TV screen. Some items can be changed using the menu. To use the on-screen display:

1 Press DISPLAY during playback.

2 Press ▲ / ▼ to select an item.
The selected item is highlighted.

3 Press ◄ / ► to change the setting. You can also use the number buttons if appropriate (e.g. inputting the title number). For some functions, press ENTER to execute the setting.

PLAYBACK STATUS/RESTRICTIONS

Title Repeat title

A - B Repeat sequence

Resume play from this point

Action prohibited or not available

Notes

- Some discs may not provide all of the features shown below.
- If no button is pressed for 10 seconds, the on-screen display disappears.

Example: On-Screen Display during playing DVD Video

Items		Selection Method
Title Number	◄ 1 / 3 ►	◄ / ►, Numbers ENTER
Chapter Number	◄ 1 / 12 ►	◄ / ►, Numbers ENTER
Time search	0:20:09	Numbers, ENTER
Audio language and Digital Audio Output mode	◄ 1 ENG DD D ► 3/2.1CH	◄ / ► or AUDIO
Subtitle language	◄ 1 ENG ►	◄ / ► or SUBTITLE
Angle	◄ 1 / 3 ►	◄ / ►
Sound	Bypass	◄ / ►

Example: On-Screen Display during playing VCD

Items		Selection Method
Track Number (or PBC mode)	◄ 1 / 3 ►	◄ / ►, Numbers ENTER
Time search	0:20:09	Numbers ENTER
Audio Channel	◄ Stereo ►	◄ / ► or AUDIO
Sound	Bypass	◄ / ►

Example: On-Screen Display during playing DVD Audio

Items		Selection Method
Group Number	◄ 1 / 2 ►	◄ / ►, Numbers ENTER
Track Number	◄ 1 / 6 ►	◄ / ►, Numbers ENTER
Time search	0:20:09	Display only
Audio language and Digital Audio Output mode	◄ 1 ENG PPCM ► 3/2.1CH	◄ / ► or AUDIO
Subtitle language	◄ OFF ►	Display only
Page (or Angle)	◄ 1 / 21 ► or ◄ 1 / 3 ►	◄ / ►

Initial Settings

By using the Setup menu, you can make various adjustments to items such as picture and sound. You can also set a language for the subtitles and the Setup menu, among other things. For details on each Setup menu item, see pages 14 to 17.

To display and exit the Menu:
Press SET UP to display the menu. A second press of SET UP will take you back to initial screen.
To go to the next level:
Press ► on the remote control.
To go back to the previous level:
Press ◄ on the remote control.

General Operation

1 **Press SET UP.**
The setup menu appears.

2 **Use ▲ / ▼ to select the desired option then press ► to move to the second level.**
The screen will be shown the current setting for the selected item, as well as alternate setting(s).

3 **Use ▲ / ▼ to select the second desired option then press ► to move to the third level.**

4 **Use ▲ / ▼ to select the desired setting then press ENTER to confirm your selection.**
Some items require additional steps.

5 **Press SET UP or PLAY to exit the setup menu.**

LANGUAGE



OSD

Select a language for the Setup menu and on-screen display.

Disc Audio / Subtitle / Menu DVD-V DVD-A

Select the language you prefer for the audio track (disc audio), subtitles, and the disc menu.

Original: Refers to the original language in which the disc was recorded.

Other: To select another language, press number buttons to enter the corresponding 4-digit number according to the language code list on page 29. If you enter the wrong language code, press CLEAR on the remote control.

DISPLAY



TV Aspect DVD-V DVD-A

4:3: Select when a standard 4:3 TV is connected.
16:9: Select when a 16:9 wide TV is connected.

Display Mode DVD-V DVD-A

Display Mode setting works only when the TV Aspect mode is set to “4:3”.

Letterbox: Displays a wide picture with bands on the upper and lower portions of the screen.

Panscan: Automatically displays the wide picture on the entire screen and cuts off the portions that do not fit.

Progressive Scan

Progressive Scan Video provides the highest quality pictures with less flickering.

If you are using the COMPONENT VIDEO OUT jacks, but are connecting the receiver to a standard (analog) television, set Progressive Scan to Off.

If you are using the Component Video jacks for connection to a TV or monitor that is compatible with a progressive scan signal, set Progressive Scan to On.

1 Select "Progressive Scan" on the DISPLAY menu then press ►.



2 Select "On" using the ▲ / ▼ buttons.

3 Press ENTER to confirm your selection.
The confirm menu will appear.

4 When the confirm menu appears on your screen Cancel is highlighted as default. Use the ◄ / ► buttons to highlight Enter.

5 Pressing ENTER will set the DVD/CD Receiver to Progressive scan mode.

⚠Caution

Once the setting for progressive scan output is entered, an image will only be visible on a progressive scan compatible TV or monitor. If you set Progressive Scan to On in error, you must reset the unit.

1) Remove any disc from the unit and close the disc tray. See that "NO DISC" is displayed on the display window
2) Press and hold STOP (■) for five seconds then release it. The video output will be restored to the standard setting, and a picture will once again be visible on a conventional analog TV or monitor.

AUDIO

Each DVD disc has a variety of audio output options. Set the DVD/CD Receiver's AUDIO options according to the type of audio system you use.



5.1 Speaker Setup DVD-V DVD-A

Select speaker settings, including volume balance and distance, or test the speaker settings.
Speaker settings are only active on the Analog Multi-Channel Output. (See "Speaker Setting" page 25)

Dynamic Range Control (DRC)

DVD-V DVD-A DivX

With the DVD format, you can hear a program's soundtrack in the most accurate and realistic presentation possible, thanks to digital audio technology. However, you may wish to compress the dynamic range of the audio output (the difference between the loudest sounds and the quietest ones). Then, you may listen to a movie at a lower volume without losing dialog intelligibility. Set DRC to On for this effect.

Notes

- The DRC function works only during playback of Dolby Digital recorded discs.
- The level of Dynamic Range Compression may differ depending on the DVD disc.

Vocal DVD-V

Set Vocal to On only when a multi-channel Karaoke DVD is playing. The karaoke channels on the disc will mix into a normal stereo sound.

LOCK (Parental Control)



Rating DVD-V

Some movies contain scenes that may not be suitable for children to view. Many of these discs contain parental control information that applies to the complete disc or to certain scenes on the disc. Movies and scenes are rated from 1 to 8, depending on the country. Some discs offer more suitable scenes as an alternative.

The parental control feature allows you to block access to scenes below the rating you input, thereby preventing your children from being able to view material you believe is unsuitable.

1 Select "Rating" on the LOCK menu then, press ▶.

2 To access the Rating, Password and Country Code features, you must input the 4-digit security code you created.
If you have not yet entered a security code you are prompted to do so.
Input a 4-digit code and press ENTER. Enter it again and press ENTER to verify. If you make a mistake before pressing ENTER, press CLEAR.

3 Select a rating from 1 to 8 using the ▲ / ▼ buttons.
Rating 1-8: Rating one (1) has the most restrictions and rating eight (8) is the least restrictive.

Unlock
If you select unlock, parental control is not active and the disc plays in full.

Note
If you set a rating for the DVD/CD Receiver, all disc scenes with the same rating or lower are played. Higher rated scenes are not played unless an alternate scene is available on the disc. The alternative must have the same rating or a lower one. If no suitable alternative is found, playback stops. You must enter the 4-digit password or change the rating level in order to play the disc.

4 Press ENTER to confirm your rating selection, then press SET UP to exit the menu.

Password (Security Code)

You can enter or change password.

1 Select Password on the LOCK menu then press ▶.
2 Follow step 2 as shown left (Rating). "Change" or "New" is highlighted.
3 Enter the new 4-digit code, then press ENTER. Input it again to verify.
4 Press SET UP to exit the menu.

If you forget your Security Code

If you forget your security code you can clear it using the following steps:

1 Input the 6-digit number "210499" on the setup menu and the security code is cleared.
2 Enter a new code as described above.

Note
When " INPUT PASSWD ■■■■ " appears on the TV screen, press STOP (■) and then press SET UP to move to the setup menu.

Country Code DVD-V

Enter the code of the country/area whose standards were used to rate the DVD-Video disc, based on the list in the reference chapter.

1 Select "Country Code" on the LOCK menu, then press ▶.

2 Follow step 2 as shown left (Rating).

3 Select the first character using ▲ / ▼ buttons.

4 Shift the cursor using ▶ button and select the second character using ▲ / ▼ buttons.

5 Press ENTER to confirm your country code selection.

OTHERS



PBC VCD

Set Playback Control (PBC) to On or Off.

On:Video CDs with PBC are played according to the PBC.

Off:Video CDs with PBC are played the same way as Audio CDs.

DivX(R) Registration DivX

You can show the DivX DRM (Digital Right Management) Registration code for your unit only.



The Registration code is used for VOD (Video-On-Demand) service agent. You can purchase or rental an encrypt movie file.

Notes

If you rent the DivX VOD file, it has several options of viewing limits as show below.

- Display the number which you can watch the file.



- The rental has been expired.



- Display the authorization error.

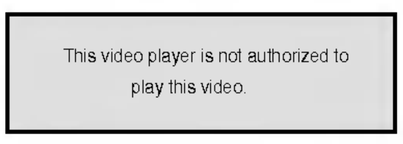

Playing a DVD and Video CD

Playback Setup DVD VCD2.0 VCD1.1

- Turn on the TV and select the video input source connected to the DVD/CD Receiver.
- Audio system: Turn on the audio system and select the input source connected to the DVD/CD Receiver.

1 Press OPEN/CLOSE (⏏) to open the disc tray.

2 Load your chosen disc in the tray, with the label facing up.
When a double-sided DVD is inserted, make sure the side you want to play is facing down.

3 Press OPEN/CLOSE (⏏) to close the tray.
READING appears on the TV screen, and playback starts automatically. If playback does not start, press PLAY.
In some cases, the disc menu might appear instead.

If a menu screen is displayed

The menu screen may be displayed first after loading a DVD or Video CD which contains a menu.

DVD-V

Use the ◄/►/▲/▼ buttons to select the title/chapter you want to view, then press ENTER to start. Press TITLE or DVD MENU to return to the menu screen.

DVD-A

Use the ◄/►/▲/▼ buttons to select an option you want, then press ENTER to view the option.

VCD2.0

- Use the number buttons to select the track you want to view.
  Press RETURN to return to the menu screen.
- Menu setting and the exact operating procedures for using the menu may differ depending on the disc. Follow the instructions on the each menu screen. You also may set PBC to Off under setup.

Notes

- If Parental Control is set and the disc is not within the Rating settings (not authorized), the 4-digit code must be entered and/or the disc must be authorized (see “Parental Control”, on page 16).
- DVDs may have a region code.
- Your receiver will not play discs that have a region code different from your receiver. The region code for this player is 3 (three).

General Features

Note
Unless stated otherwise, all operations described use the remote control. Some features may also be available on the Setup menu.

Moving to another TITLE/GROUP DVD-V DVD-A

When a disc has more than one title/group, you can move to another title/group as follows:

- Press DISP., then press the appropriate numbered button (0-9) to select a title number.

Moving to another CHAPTER/TRACK DVD-V DVD-A VCD2.0 VCD1.1 DivX

When a title on a disc has more than one chapter or a disc has more than one track, you can move to another chapter/track as follows:

- Press ⏮ or ⏭ briefly during playback to select the next chapter/track or to return to the beginning of the current chapter/track.
- Press ⏮ twice briefly to step back to the previous chapter/track.
- To go directly to any chapter during DVD playback, press DISP. Then, press ▲/▼ to select the chapter/track icon. Then, enter the chapter/track number using the numbered buttons (0-9).

Note
For two-digit numbers, press the numbered buttons (0-9) in rapid succession.

Slow Motion DVD-V DVD-A VCD2.0 VCD1.1

1. Press **SLOW -/+** during pause.
   The receiver will enter SLOW mode.
2. Use the **SLOW -/+** to select the required speed: ◀❙ 1/16, ◀❙ 1/8, ◀❙ 1/4 or ◀❙ 1/2 (backward), or ❙▶ 1/16, ❙▶ 1/8, ❙▶ 1/4 or ❙▶ 1/2 (forward).
3. To exit slow motion mode, press PLAY.

Note
Slow motion playback in reverse is not applicable for Video CD.

Still Picture and Frame-by-frame playback
DVD-V DVD-A VCD2.0 VCD1.1 DivX

1. **Press PAUSE/STEP during playback.**
   The DVD/CD Receiver will now go into PAUSE mode.
2. You can advance the picture frame-by-frame by pressing PAUSE/STEP repeatedly on the remote control.

Search DVD-V DVD-A VCD2.0 VCD1.1

1. **Press ◀◀ or ▶▶ during playback.**
   The DVD/CD Receiver will now go into SEARCH mode.
2. **Press ◀◀ or ▶▶ repeatedly to select the required speed:** ◀◀X2, ◀◀X4, ◀◀X8, ◀◀X16, ◀◀X100 (backward) or ▶▶X2, ▶▶X4, ▶▶X8, ▶▶X16, ▶▶X100 (forward).
   With a Video CD, the Search speed changes: ◀◀X2, ◀◀X4, ◀◀X8, ◀◀X16 (backward) or ▶▶X2, ▶▶X4, ▶▶X8, ▶▶X16 (forward).
3. **To exit SEARCH mode, press PLAY.**

Repeat DVD-V DVD-A VCD2.0 VCD1.1 DivX

DVD-Video discs - Repeat Chapter/Title/Off

1. **To repeat the currently playing chapter, press REPEAT.**
   The Repeat Chapter icon appears on the TV screen.
2. **To repeat the title currently playing, press REPEAT a second time.**
   The Repeat Title icon appears on the TV screen.
3. **To exit Repeat mode, press REPEAT a third time.**
   The Repeat Off icon appears on the TV screen.

Video CDs - Repeat Track/All/Off

1. **To repeat the track currently playing, press REPEAT.**
   The Repeat Track icon appears on the TV screen.
2. **To repeat the disc currently playing, press REPEAT a second time.**
   The Repeat All icon appears on the TV screen.
3. **To exit Repeat mode, press REPEAT a third time.**
   The Repeat Off icon appears on the TV screen.

Note
On a Video CD with PBC, you must set PBC to Off on the setup menu to use the Repeat function. See page 17.

General Features (continued)

Repeat A-B DVD-V DVD-A VCD2.0 VCD1.1

To repeat a sequence in a title:

1. **Press A-B at your chosen starting point.**
   A- appears briefly on the TV screen.
2. **Press A-B again at your chosen end point.**
   A-B appears briefly on the TV screen, and the repeat sequence begins.
3. **To cancel the sequence, press A-B.**

Time Search DVD-V VCD2.0 VCD1.1

The Time Search function allows you to start playing at any chosen time on the disc.

1. **Press DISP. during playback. The on-screen display appears on the screen.**
   The Time Search box shows the elapsed playing time of the current disc.
2. **Within 10 seconds, press ▲/▼ to select the Time Search icon in the on-screen display.**
   The "-:--:--" appears in the Time Search box.
3. **Within 10 seconds, use the number buttons to enter the required start time. Enter hours, minutes, and seconds from left to right in the box.**
   If you enter the wrong numbers, press CLEAR to remove the numbers you entered. Then enter the correct numbers.
4. **Within 10 seconds, press ENTER to confirm the start time.**
   Playback starts from the selected time on the disc. If you enter an invalid time, playback will continue from the current point.

Marker Search DVD-V VCD2.0 VCD1.1

You can start playback from a memorized point. Up to nine points can be memorized.
To enter a mark, follow these steps.

1. **During disc playback, press MARKER when playback reaches the spot that you want to memorize.**
   The marker icon will appear on the TV screen briefly.
2. **Repeat step 1 to enter up to nine Marker points on a disc.**

To Recall a Marked Scene

1. **During disc playback, press SEARCH.**
   The MARKER SEARCH menu will appear on the screen.
2. **Within 10 seconds, press ◀/▶ to select a marker number that you want to recall.**
3. **Press ENTER.**
   Playback will start from the Marked scene.
4. **To remove the MARKER SEARCH menu, press SEARCH.**

To clear a Marked Scene

1. **During disc playback, press SEARCH.**
   The MARKER SEARCH menu will appear on the screen.
2. **Press ◀/▶ to select the marker number that you want to erase.**
3. **Press CLEAR.**
   The marker number will be erased from the list.
4. **Repeat steps 2 and 3 to erase additional marker numbers.**
5. **To remove the MARKER SEARCH menu, press SEARCH.**

Zoom DVD-V DVD-A VCD2.0 VCD1.1 DivX

The Zoom function allows you to enlarge the video image and to move through the enlarged image.

1. **Press ZOOM during playback or still playback to activate the Zoom function.**
   If you press ZOOM repeatedly, the magnification level increases up to four steps.
   100% size → 400% size → 800% →
   1600% size → 100% size
2. **Use the ◀▶▲▼ buttons to move through the zoomed picture.**

Note

The zoom function may not work for some DVDs.

Special DVD Features DVD-V DVD-A

Checking the contents of DVD Video discs: Menus

DVDs may contain menus that allow you to access special features. To use the disc menu, press MENU. Then, press the appropriate number button to select an option. Alternatively, use the ◀/▶/▲/▼ buttons to highlight your selection, then press ENTER.

Title Menu DVD-V DVD-A

1 Press TITLE.
If the current title has a menu, the menu will appear on the screen. Otherwise, the disc menu may appear.

2 The menu can list camera angles, spoken language and subtitle options, and chapters for the title.

Disc Menu DVD-V DVD-A

Press MENU.
The disc menu is displayed.

Changing the Audio Language DVD-V DVD-A DivX

Press AUDIO repeatedly during playback to hear a different audio language or audio track.

Changing the Audio Channel VCD2.0 VCD1.1

Press AUDIO repeatedly during playback to hear a different audio channel (STER., LEFT or RIGHT).

Note
If ✋ appears, the feature is not available on the disc.

Subtitles DVD-V DivX

Press S-TITLE repeatedly during playback to see the different subtitle languages.

Notes
- The subtitle file of the DivX file is displayed only smi, srt and sub.
- If there is no information or there is a code that can not read in the DivX file, “1/1” etc are displayed.

DVD Audio Discs

DVD Audio is a new disc format building on the success of DVD to provide high quality, uncompressed, multi-channel audio for a new experience in audio quality. A DVD Audio disc can be identified by the DVD audio logo on the disc jacket or on the disc itself.

DVD Audio can provide higher quality stereo than Audio CDs with a sampling rate of up to 192kHz (compared to 44.1kHz for CDs). DVD Audio digital sound can be delivered with up to 24 bits of data (compared to 16 bits for a standard CD).

A typical DVD Audio disc contains up to seven times the data capacity of a CD. This additional space is used for music, either Advanced Resolution multi-channel sound quality that is closer to the artist’s master recording or for longer recordings. Many DVD Audio discs contain on-screen text, such as artist biographies, playlists, or lyrics. Some DVD Audio discs contain photo galleries or video clips.

Note
To enjoy maximum sound quality and surround effect of DVD Audio, you must use 5.1 channel analog audio output (5.1CH AUDIO OUT jacks on the DVD/CD receiver). If you use the DIGITAL OUT (OPTICAL or COAXIAL) for your audio connection, the sound will only be similar to CD-quality sound even though you’re playing a DVD Audio disc.

Moving to another GROUP



Some DVD Audio discs divide content into different groups. Your player enables you to quickly access different groups during playback via the on-screen display.

1. Press DISP. during playback on in stop mode.
2. Press ▲/▼ to select Group icon.
3. Press ◀/▶ or the numbered buttons (0-9) to select a group number.

Note:
Sometimes the author of the disc creates hidden content that can only be accessed by entering a password. If the lock icon appears on the TV screen, enter the password (sometimes you’ll find it on the disc’s jacket cover or on a web site). This password control isn’t dictated by your DVD/CD receiver — it is a function of the disc.

Since the authoring of DVD Audio Discs varies, some of the on-screen display choices might not be available for the disc you’re playing.

Viewing another PAGE



Since DVD Audio discs can hold a lot of content, there are various ways to see what’s available on the disc.

1. Press DISP. during playback.
2. Press ▲/▼ to select Page icon.
3. Press ◀/▶ to select a page number.

   What appears on the screen will vary from disc to disc because the information available depends upon the way the disc was created.

Note:
Since the authoring of DVD Audio Discs varies, some of the on-screen display choices might not be available for the disc you’re playing.

Playing an Audio CD and MP3/WMA Disc CD MP3 WMA

The DVD/CD Receiver can play MP3/WMA formatted recordings on CD-ROM, CD-R, or CD-RW discs.

Audio CD

Once you insert an audio CD a menu appears on the TV screen. Press ▲ / ▼ to select a track then press PLAY or ENTER and playback starts.



MP3 / WMA

1. Press ▲ / ▼ to select a folder, and press ENTER to see the folder contents.
2. Press ▲ / ▼ to select a track then press PLAY or ENTER. Playback starts.



Notes

- If you are in a file list on the MP3/WMA menu and want to return to the Folder list, use the ▲ / ▼ to highlight .. and press ENTER.
- Press MENU to move to the next page.
- On a CD with MP3/WMA file and JPEG file, you can switch MP3/WMA and JPEG menu. Press TITLE and MP3/WMA or JPEG word on top of the menu is highlighted. Then, use ◄ / ► to select MP3/WMA or JPEG then press ENTER.

Pause CD MP3 WMA

1 Press PAUSE/STEP during playback.

2 To return to playback, press PLAY or press PAUSE/STEP again.

Moving to another Track CD MP3 WMA

- Press ⏮ or ⏭ briefly during playback to go to the next track or to return to the beginning of the current track.
- Press ⏮ twice briefly to step back to the previous track.
- In case of audio CD, to go directly to any track, enter the track number using the numbered buttons (0-9) during playback.

Repeat Track/All/Off CD MP3 WMA

You can play a title/chapter/all/track on a disc.

1 Press REPEAT when playing a disc. The repeat icon appears.

2 Press REPEAT to select a desired repeat mode.
- TRACK: repeats the current track
- ALL: repeats all the tracks on a disc.
- Off(No display): does not play repeatedly.

Search CD MP3 WMA

1 Press ◄◄ or ►► during playback.
The receiver will now go into SEARCH mode.

2 Press ◄◄ or ►► repeatedly to select the required speed: ◄◄X2, ◄◄X4, ◄◄X8 (backward) or ►►X2, ►►X4, ►►X8 (forward).

3 To exit SEARCH mode, press PLAY.

MP3 / WMA disc compatibility with this player is limited as follows:

- Sampling frequency: within 32 - 48 kHz (MP3), within 24 - 48kHz (WMA)
- Bit rate: within 8 - 320kbps (MP3), 32- 192kbps (WMA)
- The DVD/CD Receiver cannot read an MP3/WMA file that has a file extension other than ".mp3" / ".wma".
- CD-R physical format should be ISO 9660
- If you record MP3 / WMA files using software that cannot create a file system (eg. Direct-CD) it is impossible to playback MP3 / WMA files. We recommend that you use Easy-CD Creator, which creates an ISO 9660 file system.
- File names should have a maximum of 8 letters and must incorporate an .mp3 or .wma extension.
- They should not contain special letters such as / ? * : " < > | etc.
- The total number of files on the disc should be less than 999.

This DVD/CD Receiver requires discs and recordings to meet certain technical standards in order to achieve optimal playback quality. Pre-recorded DVDs are automatically set to these standards. There are many different types of recordable disc formats (including CD-R containing MP3 or WMA files) and these require certain pre-existing conditions (see above) to ensure compatible playback.

Customers should note that permission is required in order to download MP3 / WMA files and music from the Internet. Our company has no right to grant such permission. Permission should always be sought from the copyright owner.

JPEG Disc Operation

Viewing a JPEG disc JPEG

This unit can play discs with JPEG files.
Before playing JPEG recordings, read the notes on JPEG Recordings on right.

1 **Insert a disc and close the tray.**
The JPEG menu appears on the TV screen.



2 **Press ▲ / ▼ to select a folder, and press ENTER.**
A list of files in the folder appears.
If you are in a file list and want to return to the previous Folder list, use the ▲ / ▼ buttons on the remote to highlight .. and press ENTER.

3 **If you want to view a particular file, press ▲ / ▼ to highlight a file and press ENTER or PLAY.**
While viewing a file, you can press STOP to move to the previous menu (JPEG menu).

Tips

- There are four Slide Speed options : > (Slow), >> (Normal), >>> (Fast) and II (off).
  Use ▲/▼/◄/► to highlight the Speed. Then, use ◄ / ► to select the option you want to use then press ENTER.
- If you set Speed option to Off, Slide is not active.

SLIDE SHOW JPEG

Use ▲ ▼ ◄ ► to highlight the (Slide Show) then press ENTER.

STILL PICTURE JPEG

1. Press PAUSE/STEP during slide show.
   The DVD/CD Receiver will now go into PAUSE mode.
2. To return to the slide show, press PLAY or press PAUSE/STEP again.

MOVING TO ANOTHER FILE JPEG

Press SKIP (⏮ or ⏭) once while viewing a picture to advance to the next or previous file.

TO ROTATE PICTURE JPEG

Press ◄ / ► during showing a picture to rotate the picture clockwise or counter-clockwise.

JPEG disc compatibility with this player is limited as follows:

- Depending upon the size and number of JPEG files, it could take a long time for the DVD/CD Receiver to read the disc's contents. If you don't see an on-screen display after several minutes, some of the files may be too large — reduce the resolution of the JPEG files to less than 2760 x 2048 pixels and burn another disc.
- The total number of files and folders on the disc should be less than 999.
- Some discs may be incompatible due to a different recording format or the condition of disc.
- Ensure that all the selected files have the ".jpg" extensions when copying into the CD layout.
- If the files have ".jpe" or ".jpeg" extensions, please rename them as ".jpg" file.
- File names without ".jpg" extension will not be able to be read by this DVD/CD Receiver. Even though the files are shown as JPEG image files in Windows Explorer.

Programmed Playback CD MP3 WMA

The program function enables you to store your favorite tracks from any disc in the receiver memory. A program can contain 300 tracks.

1 **Insert a disc.**

Audio CD and MP3/WMA Discs:
Audio CD or MP3/WMA menu appears as below.



Audio CD Menu



MP3/WMA Menu

2 Select a track on the "List", then press PROGRAM or select "♫→ (Add)" icon then press ENTER to place the selected track on the "Program" list. Repeat to place additional tracks on the list.

Note
You can add all tracks in the disc. Select "♫→ (Add All)" icon then press ENTER.

3 Select the track you want to start playing on the "Program" list. Press MENU to move to the next page.

4 Press PLAY or ENTER to start. Playback begins in the order in which you programmed the tracks. Playback stops after all of the tracks on the "Program" list have played once.

5 To resume normal playback from programmed playback, select a track of AUDIO CD (or MP3/WMA) list and then press PLAY.

REPEAT PROGRAMMED TRACKS

1. Press REPEAT when playing a disc. The repeat icon appears.
2. Press REPEAT to select a desired repeat mode.
   - TRACK: repeats the current track
   - ALL: repeats all the tracks on programmed list.
   - Off(No display): does not play repeatedly.

ERASING A TRACK FROM "PROGRAM" LIST

1. Use ▲▼ to select the track that you wish to erase from the Program list.
2. Press CLEAR. Alternatively, select "♫🗑 (Delete)" icon then press ENTER to place the selected track on the Program list. Repeat to erase additional tracks on the list.

ERASING THE COMPLETE PROGRAM LIST

Use ▲ / ▼ to select "♫🗑 (Del all)", then press ENTER.

Note
The programs are also cleared when the disc is removed.

DivX Disc Operation

Using this DVD/CD Receiver you can play DivX disc.

1 Insert a disc and close the tray. The DivX menu appears on the TV screen.

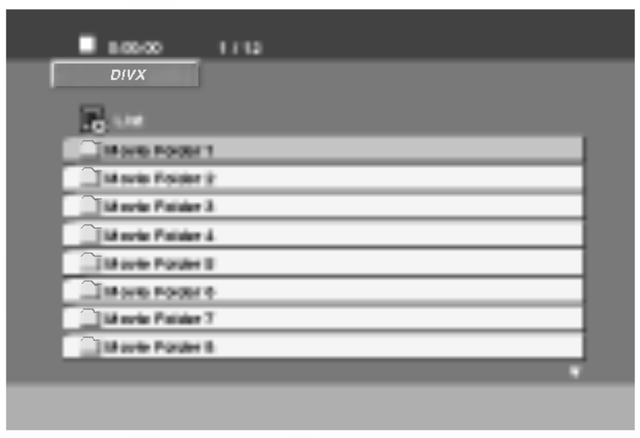

2 Press ▲ / ▼ to select a folder, and press ENTER. A list of files in the folder appears. If you are in a file list and want to return to the Folder list, use the ▲ / ▼ buttons on the remote to highlight and press ENTER.

3 If you want to view a particular file, press ▲ / ▼ to highlight a file and press ENTER or PLAY.

4 Press STOP to exit.

Notes

- Be sure to select “SUBTITLE ON” mode before playback a DivX file by pressing ENTER every time.
- When the subtile has more than two languages in the file, original subtile is only available.
- The Pro logic II Sound mode is not available for DivX file.
- The DivX files in your memory card will not be able to be play.

DivX disc compatibility with this player is limited as follows:

- Available resolution size of the DivX file is under 720x576 (W x H) pixel.
- The file name of the DivX subtitle is available by 20~40 characters (different by language).
- If there is impossible code to express in the DivX file, it may be displayed as " _ " mark on the display.
- **If the number of the screen frame is over 30 per 1 second, this unit may not operate normally.**
- **If the video and audio structure of recorded file is not interleaved, either video or audio is outputted.**
- **If the file is recorded with GMC, the unit supports some of 1-point of the record level.**
  * GMC?
  GMC is the acronym for Global Motion Compensation. It is an encoding tool specified in MPEG4 standard. Some MPEG4 encoders, like DivX or Xvid, have this option. There are different levels of GMC encoding, usually called 1-point, 2-point, or 3-point GMC.

Playable DivX file

● ".avi ", ".mpg ", ".mpeg "

Playable Codec format

● "DIVX3.xx ", "DIVX4.xx ", "DIVX5.xx ", "XVID ", "MP43 ", "3IVX ", "MP42 ".

Playable Audio format

● "AC3 ", "DTS ", "PCM ", "MP3 ", "WMA ".
- Sampling frequency: within 32 - 48 kHz (MP3), within 24 - 48kHz (WMA)
- Bit rate: within 32 - 320kbps (MP3), 40 - 192kbps (WMA)

Speaker Setup

Adjust the following settings for the built-in 5.1 channel surround decoder.

1 Press SET UP.
The setup menu appears.

2 Use ▲ / ▼ to select the AUDIO option then press ► to move to the second level.

3 Use ▲ / ▼ to select the Speaker Setup option then press ► to move to the third level. "Select" is highlighted.

4 Press ENTER and 5.1 Speaker Setup menu appears.

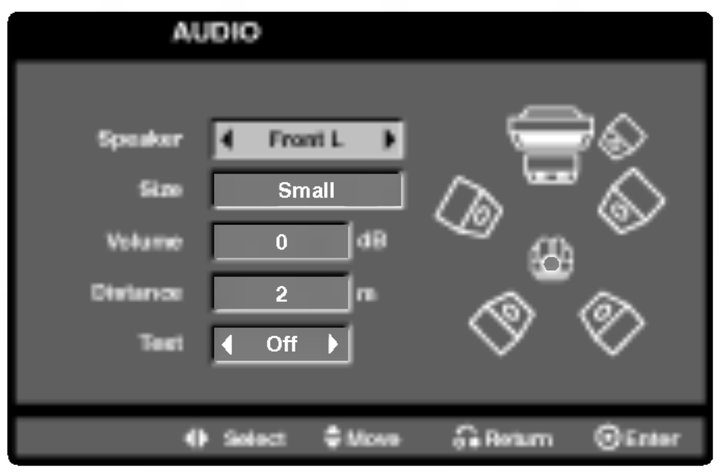

5 Use ◄ / ► to select the desired speaker.

6 Adjust options using ▲ / ▼ / ◄ / ► buttons.

7 Press ENTER to confirm your selection. The unit returns to the previous menu.

Speaker

Select a speaker that you want to adjust.
(Front speakers (Left), Front speakers (Right), Center Speaker, SubWoofer, Rear speakers (Left), or Rear speakers (Right))

Note
Certain speaker settings are prohibited by the Dolby Digital licensing agreement.

Size

Since the speaker settings are fixed, you cannot change them.

Volume

Press ◄ / ► to adjust the output level of the selected speaker. (-5dB ~ +5dB)

Distance

If you connected speakers to your DVD/CD Receiver, setting the distance lets the speakers know how far the sound has to travel to reach your set listening point. This allows the sound from each speaker to reach the listener at the same time.
Press ◄ / ► to adjust the Distance of the selected speaker.

Note
You can adjust the distance of Center speaker and Rear speakers (left & right) only.

Test

Press ◄ / ► to test the signals of each speaker.
Adjust the volume to match the volume of test signals memorized in the system.
Front Left (L) → Center → Front Right (R) → Rear Right (R) → Rear Left (L) → SubWoofer

Additional Information

Last Condition Memory DVD

This DVD/CD Receiver memorizes the user settings for the last disc that you have viewed. Settings remain in memory even if you remove the disc from the player or switch off the player. If you load a disc that has its settings memorized, the latest stop position is automatically recalled.

Notes

- Settings are stored in memory for use any time.
- This DVD/CD Receiver does not memorize settings of a disc if you switch off the DVD/CD Receiver before commencing to play it.

Screen Saver

The screen saver appears when you leave the DVD player in Stop mode for about five minutes.

System Select

You must select the appropriate system mode for your TV system. If NO DISC appears in the display window, press and hold P/STEP on the front panel or remote control for more than 5 seconds to be able to select a system (PAL, NTSC or AUTO).

- When the selected system does not coincide with the system of your TV, normal colour picture may not be displayed.

AUTO: Select when DVD/CD Receiver is connected with Multi system TV.

NTSC: Select when DVD/CD Receiver is connected with NTSC-TV.

PAL: Select when DVD/CD Receiver is connected with PAL-TV.

Controlling the TV

Your remote control is capable of operating your DVD/CD Receiver as well as limited functions of LG TV. Follow the instructions below to operate for your LG TV.

1 Before using the remote control, press the **TV** to select the device to be operated.
To switch the remote control mode (to operate a different device), be sure to press the **TV** first.

2 The **POWER, CH(▼/▲), VOLUME (+/-),** and **INPUT** buttons on remote control are used to operate the LG TV.

Setting Remote Control Codes for LG TV

- Hold **POWER** and press **PR/CH(+/-) (▼/▲)** button repeatedly until the TV on or off.

Note

If the remote control does not operate your particular TV, try the other code or use the remote control originally supplied with the LG TV. (LG and Gold Star)
Due to the variety of codes used by manufacturers, OUR COMPANY cannot guarantee that the remote control will operate every model of LG TV.

Operation with Radio

Presetting the radio stations

You can preset 50 stations for FM and AM (MW). Before tuning, make sure that you have turned down the volume.

1 Press BAND on the remote control until FM or AM (MW) appears in the display window.

2 And then every time you press BAND, FM and AM (MW) changes alternately.

3 Press and hold TUNING ⏮ ◀◀ or ▶▶ ⏭ on the front panel for about two seconds until the frequency indication starts to change, then release.
Scanning stops when the DVD/CD Receiver tunes in a station. "TUNED" and "STEREO" (for stereo program) appear in the display window.

4 Press PROG./MEMO. on the remote control.
A preset number will flash in the display window.

5 Press PR (▲/▼) on the remote control to select the preset number you want.

6 Press PROG./MEMO. on the remote control again.
The station is stored.

7 Repeat steps 3 to 6 to store other stations.

To tune in a station with a weak signal

Press TUNING ⏮ ◀◀ or ▶▶ ⏭ repeatedly in step 3 to tune in the station manually.

To clear all the stored stations

Press and hold PROG./MEMO. for about two seconds and "CLEAR ALL" is appeared in the display window and then press PROG./MEMO. again, the stations are cleared.

- If you have accidentally entered into the "CLEAR ALL" and you do not wish to clear the memory, do not press any key. After a few seconds, the "CLEAR ALL" display will go off by itself and change to mode.

Note

If all stations have already been entered, the FULL message will appear in the display window for a moment and then a preset number will flash.
To change the preset number, follow the steps 5-6 as above.

Listening to the radio

Preset radio stations in the DVD/CD Receiver's memory first (see "Presetting radio stations" on the left).

1 Press BAND until AM (MW) or FM appears in the display window.
The last received station is tuned in.

2 Press PR(▲/▼) repeatedly on the remote control to select the preset station you want.
Each time you press the button, the DVD/CD Receiver tunes in one preset station at a time.

3 Adjust the volume by rotating VOLUME on the front panel or by pressing VOLUME + or - on the remote control repeatedly.

To turn off the radio

Press POWER to turn the DVD/CD Receiver off or select another function mode (DVD/CD, AV 1, etc.,).

To listen to non-preset radio stations

- Use manual or automatic tuning in step 2.
- For manual tuning, press **TUN(-) ◀ or TUN (+) ▶** on the remote control repeatedly.
- For automatic tuning, press and hold **TUN(-) ◀ or TUN (+) ▶** for about two seconds on the remote control.

To select a preset radio station directly

You can use the number buttons on the remote control to select a preset radio station directly.
For example, to listen to preset station 4, press 4 on the remote control. To listen to preset station 19, press 1 then 9 (within 3 seconds).

For your reference

- **If an FM program is noisy**
  Press MONO/ST. on the front panel so that "STEREO" disappears in the display window. There will be no stereo effect, but the reception will improve. Press the button again to restore the stereo effect.
- **To improve reception**
  Reorient the supplied antennas.

Other Functions

Sleep Timer Setting

You can set the DVD/CD Receiver to turn off automatically at a specified time.

1 **Press SLEEP to set the desired sleep time.**
The SLEEP indicator and sleep time appears in the display window.

2 **Each time you press SLEEP the setting changes in the following order.**
SLEEP 180 → 150 → 120 → 90 →80 → 70 → 60 → 50 → 40 → 30 → 20 →10 → OFF

Note

- **You can check the time remaining before the DVD/CD receiver turns off.**
  Press SLEEP. The remaining time appears in the display window.

Dimmer

This function will change the brightness of the display window on the front panel during in power-on status.

Press the DIMMER repeatedly.

Mute

Press MUTE to mute your unit.

You can mute your unit in order, for example, to answer the telephone, "MUTE" indicator flashes in the display window.

Using the Headphone Jack

Connect a stereo headphone plug (∅3.5mm) into the **PHONES connector**.

The speakers are automatically disconnected when you plug in a headphone (not supplied).

Selecting the Input Source

You can use VCRs or other units connected to the AV1 IN, AV2 IN. Refer to the owner's manual supplied with the unit for further information on the operation.

Press AUX and D.INPUT repeatedly on the remote control to select the desired input source.
Each time you press this button, the mode of the function changes in the following sequence:

- **AV1:** for selecting the analog signal from AV1 AUDIO IN (L/R) & VIDEO IN Connectors.
- **AV2:** for selecting the analog signal from AV2 AUDIO IN (L/R) & VIDEO IN Connectors.

Note

- You can also select the input source by pressing FUNC. button on the front panel.

XTS (Excellent True Sound)

You can enjoy the vivid stereophonic sound of the digital original source without any signal distortion.

Each time you press XTS during 2 channel mode, the setting changes in the following order.
XTS- 1 → XTS- 2 → XTS- 3 → NORMAL ...

Tips:

- XTS- 1: When playing the movie with the weak bass sound relatively to the general music, it enforces the sense of sound at woofer for you to satisfy with.
- XTS- 2: In the mode of 2 CH BYPASS, It creates the high display effect by playing the sound source via the rear speakers same as the front speakers.
- XTS- 3: You can operate both XTS- 1 and XTS- 2 simultaneously and it can complement the relative degrading of the sound pitch of the woofer at the XTS- 2 mode.

Note

- The XTS- 2 mode is temporarily disabled when changing from 2.1 CH to 5.1 CH and it is enabled when changing it to 2.1 CH.

XTS pro

The unique sound quality of the LG Technology creates the optimum sound for you to play the perfect playback of the original sound and to feel the living sound source.

Each time you press **XTS pro** the setting changes in the following order.

XTS-P ON → XTS-P OFF

Language Codes

Use this list to input your desired language for the following initial settings:
Disc Audio, Disc Subtitle, Disc Menu.

Language	Code	Language	Code	Language	Code	Language	Code
Abkhazian	6566	Finnish	7073	Macedonian	7775	Slovenian	8376
Afar	6565	French	7082	Malagasy	7771	Somali	8379
Afrikaans	6570	Galician	7176	Malay	7783	Spanish	6983
Albanian	8381	Georgian	7565	Malayalam	7776	Sudanese	8385
Ameharic	6577	German	6869	Maltese	7784	Swahili	8387
Arabic	6582	Greek	6976	Maori	7773	Swedish	8386
Armenian	7289	Greenlandic	7576	Marathi	7782	Tagalog	8476
Assamese	6583	Guarani	7178	Moldavian	7779	Tajik	8471
Azerbaijani	6590	Gujarati	7185	Mongolian	7778	Tamil	8465
Bashkir	6665	Hausa	7265	Nauru	7865	Tatar	8484
Basque	6985	Hebrew	7387	Nepali	7869	Telugu	8469
Bengali; Bangla	6678	Hindi	7273	Norwegian	7879	Thai	8472
Bhutani	6890	Hungarian	7285	Oriya	7982	Tibetan	6679
Bihari	6672	Icelandic	7383	Panjabi	8065	Tigrinya	8473
Breton	6682	Indonesian	7378	Pashto, Pushto	8083	Tonga	8479
Bulgarian	6671	Interlingua	7365	Persian	7065	Turkish	8482
Burmese	7789	Irish	7165	Polish	8076	Turkmen	8475
Byelorussian	6669	Italian	7384	Portuguese	8084	Twi	8487
Cambodian	7577	Japanese	7465	Quechua	8185	Ukrainian	8575
Catalan	6765	Javanese	7487	Rhaeto-Romance	8277	Urdu	8582
Chinese	9072	Kannada	7578	Rumanian	8279	Uzbek	8590
Corsican	6779	Kashmiri	7583	Russian	8285	Vietnamese	8673
Croatian	7282	Kazakh	7575	Samoan	8377	Volapük	8679
Czech	6783	Kirghiz	7589	Sanskrit	8365	Welsh	6789
Danish	6865	Korean	7579	Scots Gaelic	7168	Wolof	8779
Dutch	7876	Kurdish	7585	Serbian	8382	Xhosa	8872
English	6978	Laothian	7679	Serbo-Croatian	8372	Yiddish	7473
Esperanto	6979	Latin	7665	Shona	8378	Yoruba	8979
Estonian	6984	Latvian, Lettish	7686	Sindhi	8368	Zulu	9085
Faroese	7079	Lingala	7678	Singhalese	8373		
Fiji	7074	Lithuanian	7684	Slovak	8375		

Country Codes

Choose a country code from this list.

Country	Code	Country	Code	Country	Code	Country	Code
Afghanistan	AF	Ethiopia	ET	Malaysia	MY	Saudi Arabia	SA
Argentina	AR	Fiji	FJ	Maldives	MV	Senegal	SN
Australia	AU	Finland	FI	Mexico	MX	Singapore	SG
Austria	AT	France	FR	Monaco	MC	Slovak Republic	SK
Belgium	BE	Germany	DE	Mongolia	MN	Slovenia	SI
Bhutan	BT	Great Britain	GB	Morocco	MA	South Africa	ZA
Bolivia	BO	Greece	GR	Nepal	NP	South Korea	KR
Brazil	BR	Greenland	GL	Netherlands	NL	Spain	ES
Cambodia	KH	Islands	HM	Dutch Antilles	AN	Sri Lanka	LK
Canada	CA	Hong Kong	HK	New Zealand	NZ	Sweden	SE
Chile	CL	Hungary	HU	Nigeria	NG	Switzerland	CH
China	CN	India	IN	Norway	NO	Taiwan	TW
Colombia	CO	Indonesia	ID	Oman	OM	Thailand	TH
Congo	CG	Israel	IL	Pakistan	PK	Turkey	TR
Costa Rica	CR	Italy	IT	Panama	PA	Uganda	UG
Croatia	HR	Jamaica	JM	Paraguay	PY	Ukraine	UA
Czech Republic	CZ	Japan	JP	Philippines	PH	United States	US
Denmark	DK	Kenya	KE	Poland	PL	Uruguay	UY
Ecuador	EC	Kuwait	KW	Portugal	PT	Uzbekistan	UZ
Egypt	EG	Libya	LY	Romania	RO	Vietnam	VN
El Salvador	SV	Luxembourg	LU	Russian Federation	RU	Zimbabwe	ZW

Troubleshooting

Check the following guide for the possible cause of a problem before contacting service.

Symptom	Cause	Correction
No power.	• The power cord is disconnected.	• Plug the power cord securely into the wall outlet.
The power is on, but the DVD/CD Receiver does not work.	• No disc is inserted.	• Insert a disc. (Check that the DVD or, audio CD indicator in the DVD display is lit.)
No picture.	• The TV is not set to receive DVD signal output.	• Select the appropriate video input mode on the TV so the picture from the DVD/ CD Receiver appears on the TV screen.
	• The video cable is not connected securely.	• Connect the video cable into the jacks securely.
	• The connected TV power is turned off.	• Turn on the TV.
There is no sound or only a very low-level sound is heard.	• The equipment connected with the audio cable is not set to receive DVD signal output.	• Select the correct input mode of the audio receiver so you can hear the sound from the DVD/CD Receiver.
	• The audio cables are not connected securely.	• Connect the audio cable into the jacks securely.
	• The power of the equipment connected with the audio cable is turned off.	• Turn on the equipment connected with the audio cable.
	• The audio connecting cable is damaged.	• Replace it with a new one.
The playback picture is poor.	• The disc is dirty.	• Clean the disc.
The DVD/CD Receiver does not start playback.	• No disc is inserted.	• Insert a disc. (Check that the DVD, or audio CD indicator in the DVD display is lit.)
	• An unplayable disc is inserted.	• Insert a playable disc. (Check the disc type, colour system and Regional code.)
	• The disc is placed upside down.	• Place the disc with the playback side down.
	• The disc is not placed within the guide.	• Place the disc on the disc tray correctly inside the guide.
	• The disc is dirty.	• Clean the disc.
	• A menu is on the TV screen.	• Press the SET UP button to turn off the menu screen.
	• The Rating level is set.	• Cancel the Rating function or change the rating level.
Loud hum or noise is heard.	• The plugs and jacks are dirty.	• Wipe them with a cloth slightly moistened with alcohol.
	• The disc is dirty.	• Clean the disc.
	• The speakers and components are connected poorly.	• Connect the speakers and components securely.
	• The DVD/CD Receiver is located too close to the TV.	• Move your TV away from the audio components.

Troubleshooting (Cont'd)

Symptom	Cause	Correction
Radio stations cannot be tuned in.	• The antenna is positioned or connected poorly.	• Connect the antenna securely.
		• Adjust the antennas and connect an external antenna if necessary.
	• The signal strength of the stations is too weak (when tuning in with automatic tuning).	• Tune in the station manually.
	• No stations have been preset or preset stations have been cleared (when tuning by scanning preset stations).	• Preset the stations (page 27).
The remote control does not work properly.	• The remote control is not pointed at the remote sensor of the DVD/CD Receiver.	• Point the remote control at the remote sensor of the DVD/CD Receiver.
	• The remote control is too far from the DVD/CD Receiver.	• Use the remote control within about 23 ft (7 m).
	• There is an obstacle in the path of the remote control and the DVD/CD Receiver.	• Remove the obstacle.
	• The batteries in the remote control are flat.	• Replace the batteries with new ones.
The front panel display is too dim.	• Nothing is displayed on the front panel display.	• Press DIMMER on the remote control.

Specifications

General	Power supply	Refer to main label		
	Power consumption	Refer to main label		
	Mass	3.9 kg		
	External dimensions (W x H x D)	430 x 54 x 350 mm		
	Operating conditions	Temperature: 5°C to 35°C, Operation status: Horizontal		
	Operating humidity	5% to 85%		
CD/DVD	Laser	Semiconductor laser, wavelength 650 nm		
	Signal system	PAL 625/50, NTSC 525/60		
	Frequency response (audio)	200 Hz to 20 kHz		
	Signal-to-noise ratio (audio)	More than 75 dB (1 kHz, NOP, 20 kHz LPF/A-Filter)		
	Dynamic range (audio)	More than 70 dB		
	Harmonic distortion (audio)	0.5 % (1 kHz, at 12W position) (20 kHz LPF/A-Filter)		
Video	Video input	1.0 V (p-p), 75 Ω, negative sync., RCA jack x 1		
	Video output	1.0 V (p-p), 75 Ω, negative sync., RCA jack x 1		
	S-video output	(Y) 1.0 V (p-p), 75 Ω, negative sync., Mini DIN 4-pin x 1 (C) 0.3 V (p-p), 75 Ω		
	Component Video output	(Y) 1.0 V (p-p), 75 Ω, negative sync., RCA jack x 1 (Pb)/(Pr) 0.7 V (p-p), 75 Ω, RCA jack x 1		
Tuner FM	Tuning Range	87.5 - 108.0 MHz		
	Intermediate Frequency	10.7 MHz		
	Signal-to Noise Ratio	60 dB (Mono)		
	Frequency Response	140 - 10,000 Hz		
Tuner AM [MW]	Tuning Range	522 - 1,620 kHz		
	Intermediate Frequency	450 kHz		
Amplifier	Stereo mode	70W + 70W (8Ω at 1 kHz, THD 10 %)		
	Surround mode **(* Depending on the sound mode settings and the source, there may be no sound output.)**	Front: 70W + 70W (THD 10 %) Centre*: 70W Surround*: 70W + 70W (8Ω at 1 kHz, THD 10 %) Subwoofer*: 150W (4Ω at 30 Hz, THD 10 %)		
	Inputs	AV IN, MIC Jacks (ø3.5mm)		
	Outputs	S-VIDEO, MONITOR, PHONES: (32 Ω, 1.0 V)		
Speakers		Satellite Speaker (LHS-55SBS)	Centre speaker (LHS-55SBC)	Passive Subwoofer (LHS-55SBW)
	Type	1 Way 2 Speaker	1 Way 2 Speaker	1 Way 1 Speaker
	Impedance	8 Ω	8 Ω	4 Ω
	Frequency Response	150 - 20,000 Hz	150 - 20,000 Hz	40 - 1,500 Hz
	Sound Pressure Level	86 dB/W (1m)	86 dB/W (1m)	82 dB/W (1m)
	Rated Input Power	70 W	70 W	150 W
	Max. Input Power	140 W	140 W	300 W
	Net Dimensions (W x H x D)	140 x 222 x 153 mm	300 x 116 x 91 mm	180 x 400 x 355 mm
	Net Weight	0.95kg	1.0kg	5.6kg

Supplied Accessories

- Speakers 6
- AM loop antenna 1
- Remote control 1
- Video cable 1
- Speaker cables 6
- FM antenna 1
- Batteries (AAA) 2

✻ Designs and specifications are subject to change without notice.