LG

Upright Vacuum Cleaner

Owner's Manual

MODEL: VFA282HTR/S/B
VFA272FTR/S/B
VFA262FNR/S/B

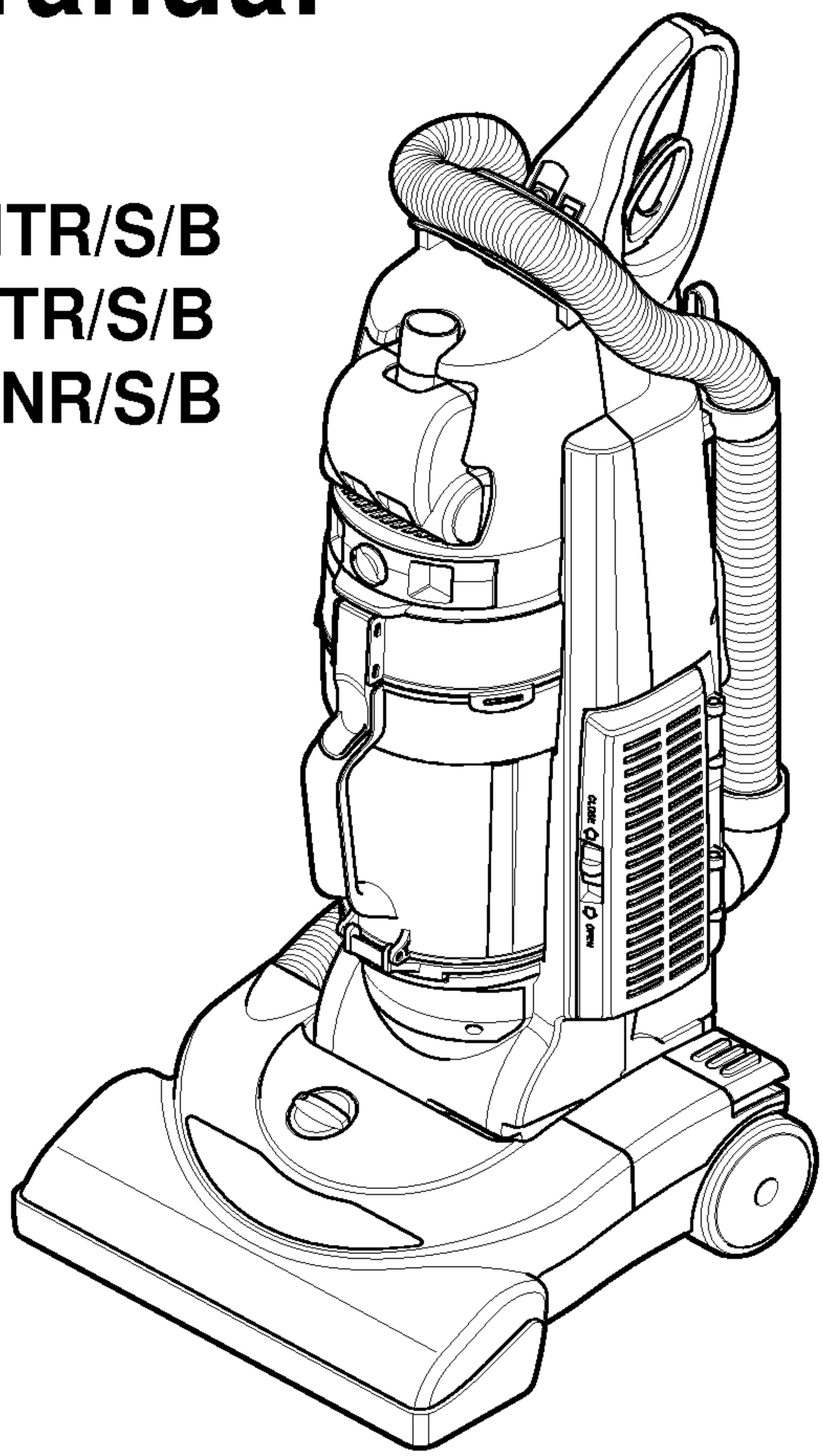

PLEASE READ THIS MANUAL THOROUGHLY AND CAREFULLY BEFORE OPERATING THE VACUUM CLEANER

P/No.: 3828FI3877A

TABLE OF CONTENTS

INFORMATION FOR YOUR SAFETY 3

PARTS AND FEATURES 4

TELESCOPIC HANDLE RELEASE 5

CORD RELEASE 5

SWITCH OPERATION 6

BODY RELEASE AND POSITIONS 6

RECOMMENDED PILE HEIGHT SETTINGS 6

ATTACHMENT USE CHART 7

VACUUMING TIPS 7

ATTACHMENTS 7

PERFORMANCE FEATURES 9

VACUUM CLEANER CARE 10

Vacuum Storage 10

Dust bin assembly 10

Dust bin cleaning 11

Filters cleaning / changing 12

Belt Changing and Agitator Cleaning 13

Cleaning exterior 15

Removing clogs 15

TROUBLESHOOTING 16

INFORMATION FOR YOUR SAFETY

Please read all the following information, which contains important instructions for the safety, the use and the maintenance of the appliance.
This appliance complies with the following EC Directives: -73/23/EEC, 93/68/EEC-Low Voltage Directive-89/336EEC -EMC Directive.

- ❑ Never allow children to use the appliance unsupervised.
- ❑ Do not allow it to use as a toy, injury could result.
- ❑ Do not continue to the cleaner if any appears to be faulty, missing or damaged. In these cases, contact an approved LG Electronics Service Agent.
- ❑ Repairs, when necessary, must be performed at an approved LG Electronics Service Agent.
- ❑ Only use parts produced or recommended by LG doing otherwise could invalidate your guarantee.
- ❑ Do not use without the dust tank or air filter.
- ❑ Do not use the vacuum cleaner If the power cord is damaged or faulty.
- ❑ If the power cord is damaged, it must be replaced by an approved LG Electronics Service Agent to avoid a hazard.
- ❑ Do not unplug by pulling on cord.
- ❑ Do not pull on the supply cord, run over it, pull it around sharp edges or near/over hot surfaces.
- ❑ Always turn the vacuum cleaner off before:
  - Emptying the dust bin.
  - Cleaning or changing the filter.
  - Removing from the mains outlet.
- ❑ Do not leave vacuum cleaner with the plug connected to a mains outlet-unplug when not in use.
- ❑ Do not use the vacuum with any of the openings blocked with any object that may restrict the airflow.
- ❑ Do not put any part of the body, clothes or any object (e.g. stick) or into the opening or moving parts of the cleaner.
- ❑ Do not use outdoors.
- ❑ Do not vacuum hot ash, embers etc. or sharp objects.
- ❑ Do not vacuum flammable or explosive substances(liquids or gases).
- ❑ Do not vacuum water or other liquids.
- ❑ Do not handle the cleaner or plug with wet hands.
- ❑ Do not immerse the whole cleaner in water.
- ❑ Do not use vacuum cleaner without repaired if it was under water.
- ❑ When you vacuum with an attachment appliance that has a rotating brush roller:
  - Do not reach into the running brush roller.
- ❑ The appliance is not intended for use by young children or infirm persons without supervision.
  - Young children should be supervised to ensure that they do not play with the appliance.
- ❑ If the appliance is supplied from a cord extension set or an electrical portable outlet device, the cord extension set on electrical portable outlet device must be positioned so that it is not subject to splashing or ingress of moisture.

Thermal protector: This vacuum cleaner has a special thermostat that protects the cleaner in case of motor overheating. If the cleaner suddenly shuts off, turn off the switch and unplug the cleaner. Check the cleaner for a possible source of overheating such as a full dust chamber, a blocked hose or clogged filter. If these conditions are found, fix them and wait at least 30 minutes before attempting to use the cleaner. After the 30 minutes period, plug the cleaner back in and turn on the switch. If the cleaner still does not run, contact a qualified electrician.

Important for users in the UK.
The wires in the mains lead of this appliance are coloured in accordance with the following code:

BLUE-neutral **BROWN - live**

VERY IMPORTANT:
Do not earth the appliance If a 13 amp plug is fitted, fit a 13 amp **BS 1362 fuse**.
If any other type of plug is used, protect with a 15 amp fuse at the distribution board.
For appliances which come with mains lead and plug moulded on: the plug moulded on to the cable incorporates a fuse.
For replacement use a 13 amp BS 1362 fuse.
Only ASTA approved or certified fuses should be used.
The plug must not be used if the fuse cover/carrier is lost.
A replacement cover carrier must be obtained from authorised electrical goods retailers.

PARTS AND FEATURES

It is important to know your vacuum cleaner's parts and features to assure its proper and safe use. Review these before using your cleaner.

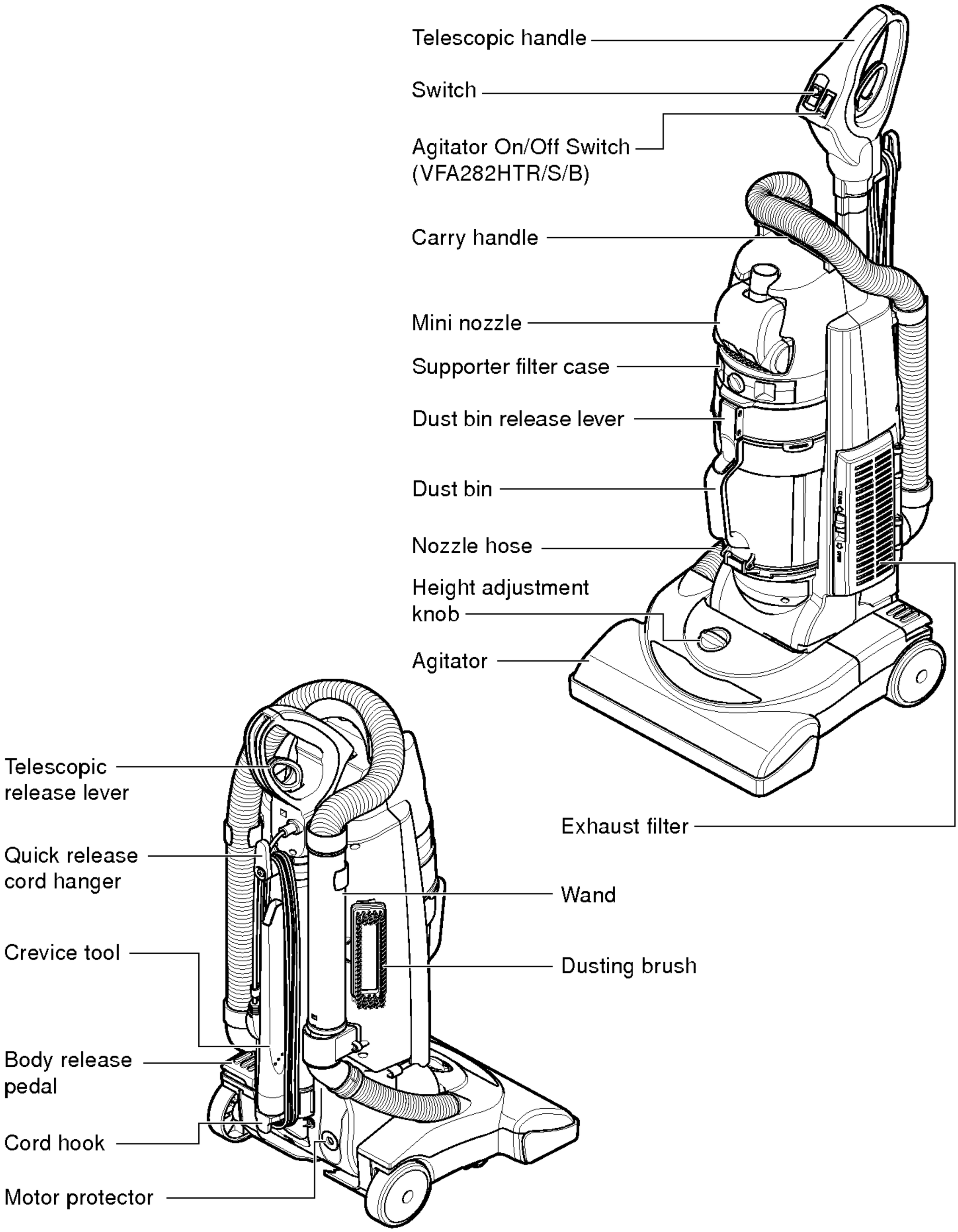

TELESCOPIC HANDLE RELEASE

Release the telescopic handle by pulling telescopic release lever up with fingers and pulling up the telescopic handle.

To lower the telescopic handle pull the telescopic release lever up with fingers and push down on the telescopic handle.

Note : For your convenience, adjust telescopic handle height properly to your height.

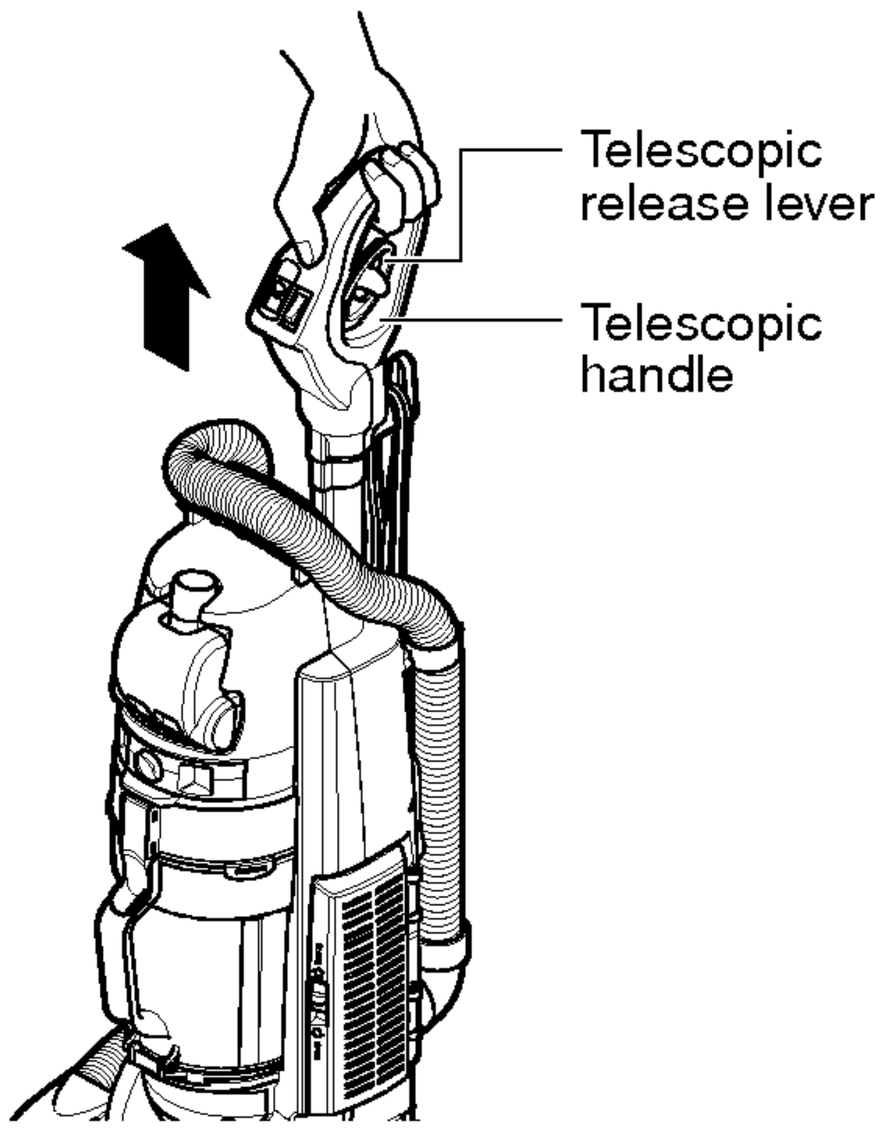

CORD RELEASE

Turn the quick release cord hanger to either side to release the power cord.

To store the power cord, wrap the power cord around the quick release cord hanger and hook, and clip the plug onto the power cord

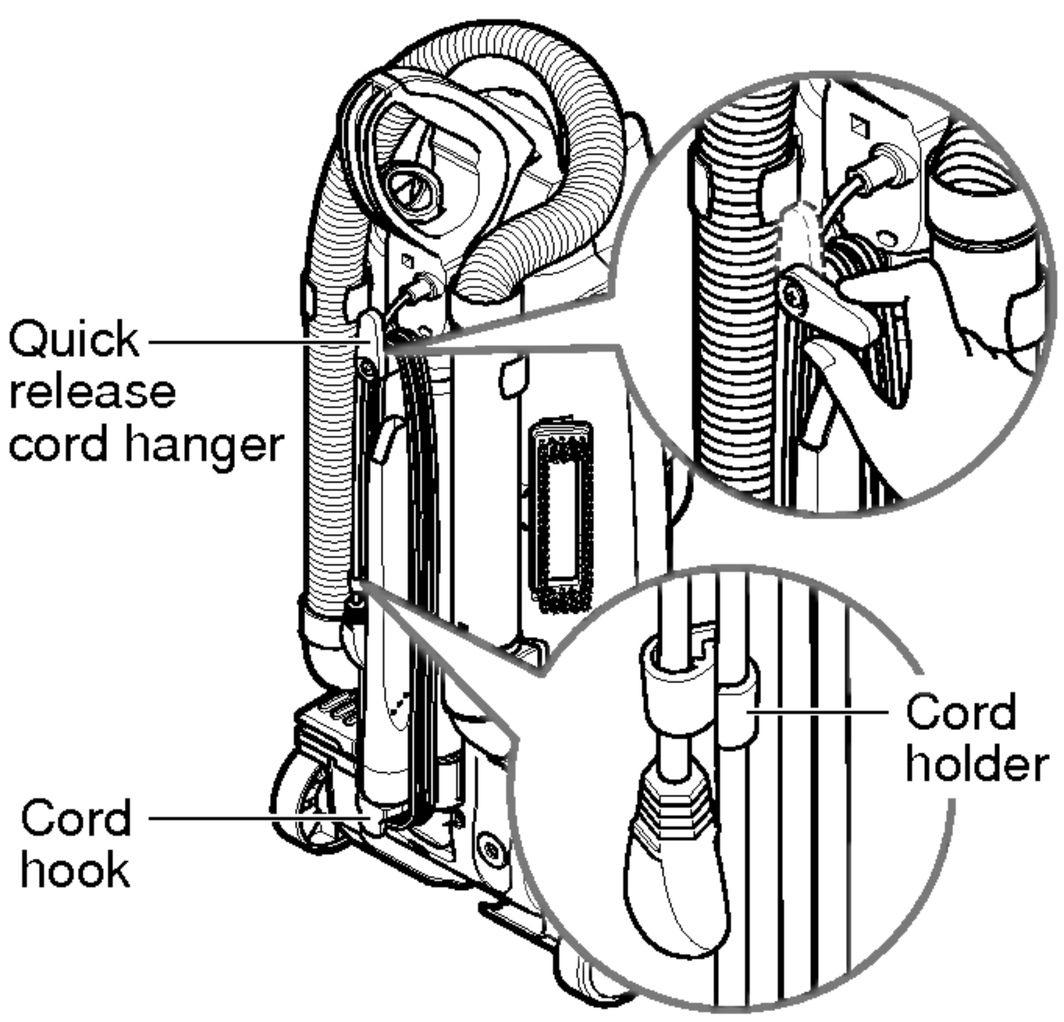

Plug shape:

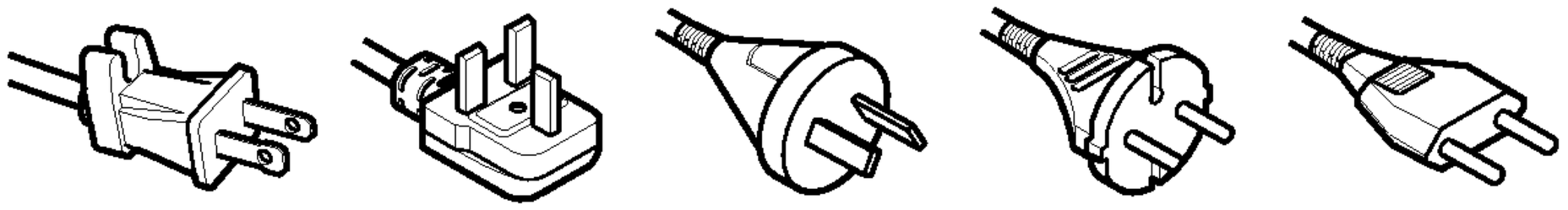

NORTH AMERICA UK AUSTRALIA EU

SWITCH OPERATION

Switch operation

VFA282HTR/S/B
- Min ↔ Max
- Carpet: Agitator On/Off Switch

VFA272FTR/S/B
- Off
- Floor: Agitator off
- Carpet: Agitator on

VFA262FNR/S/B
- On/Off Switch

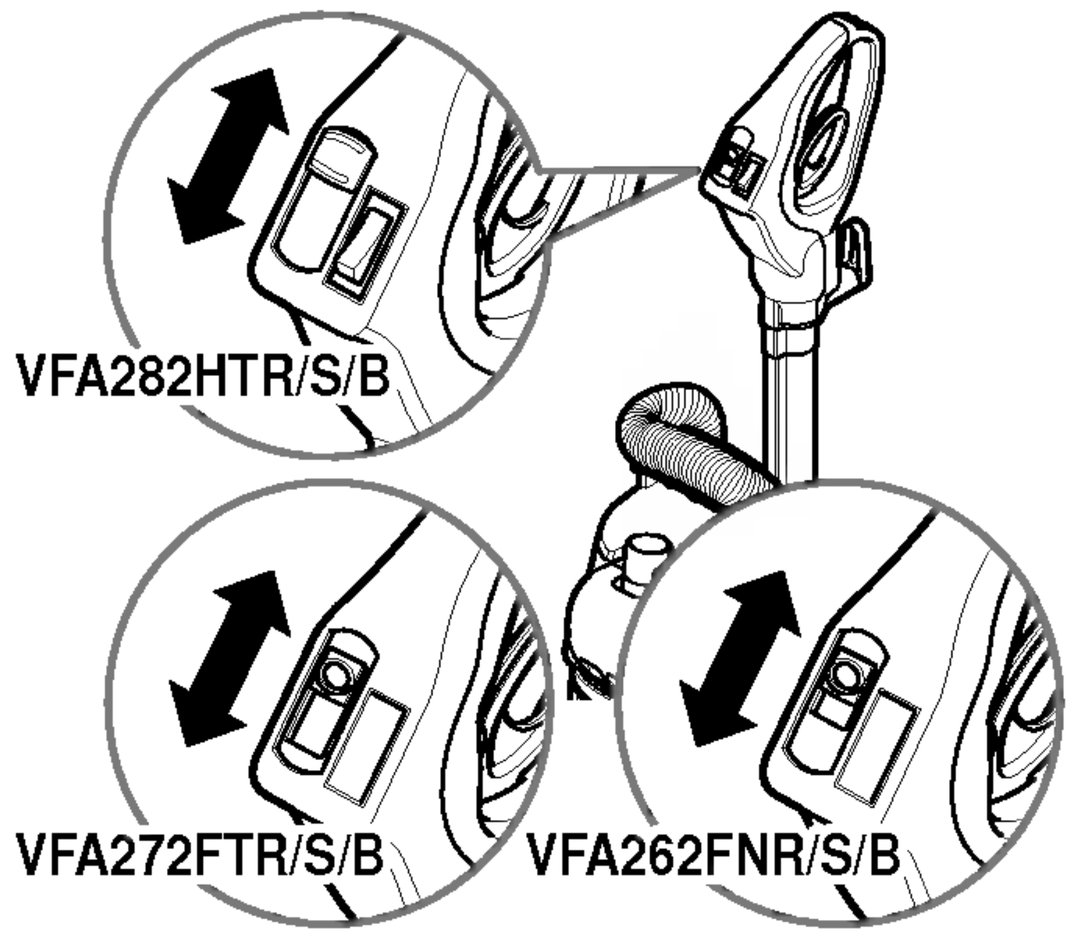

WARNING

Personal injury hazard
To avoid personal injury, do not turn switch On/Off if the vacuum or your hand is wet.

BODY RELEASE AND POSITIONS

Release the vacuum body by pressing down on the body release pedal with your foot and pulling back and down.

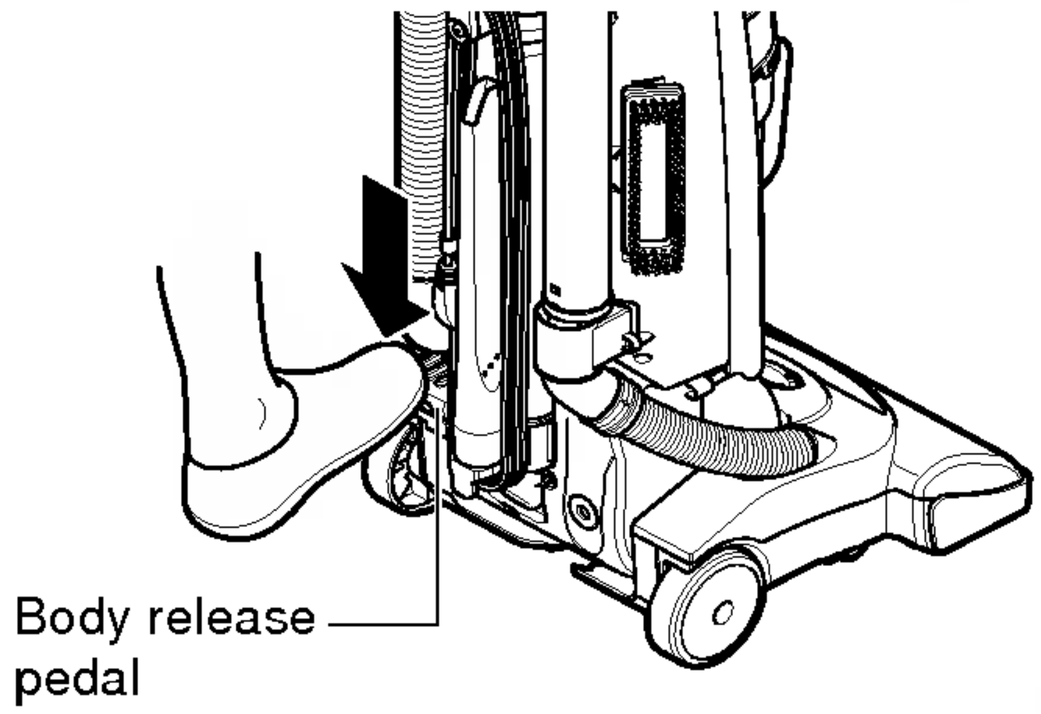

RECOMMENDED PILE HEIGHT SETTINGS

To select a pile height setting :
Turn off cleaner first. Select a pile height setting by using height adjustment knob.
Rotate the adjustment knob to the correct setting position.

Suggested pile height settings :
You may need to raise the height to make some jobs easier, such as scatter rugs and longer pile carpets.

For easiest adjustment, place cleaner in full upright position.

Attention: Special care is required when vacuuming certain types of carpet or floor covering. Always check the carpet or floor covering manufacturer's recommended cleaning instructions before vacuuming.

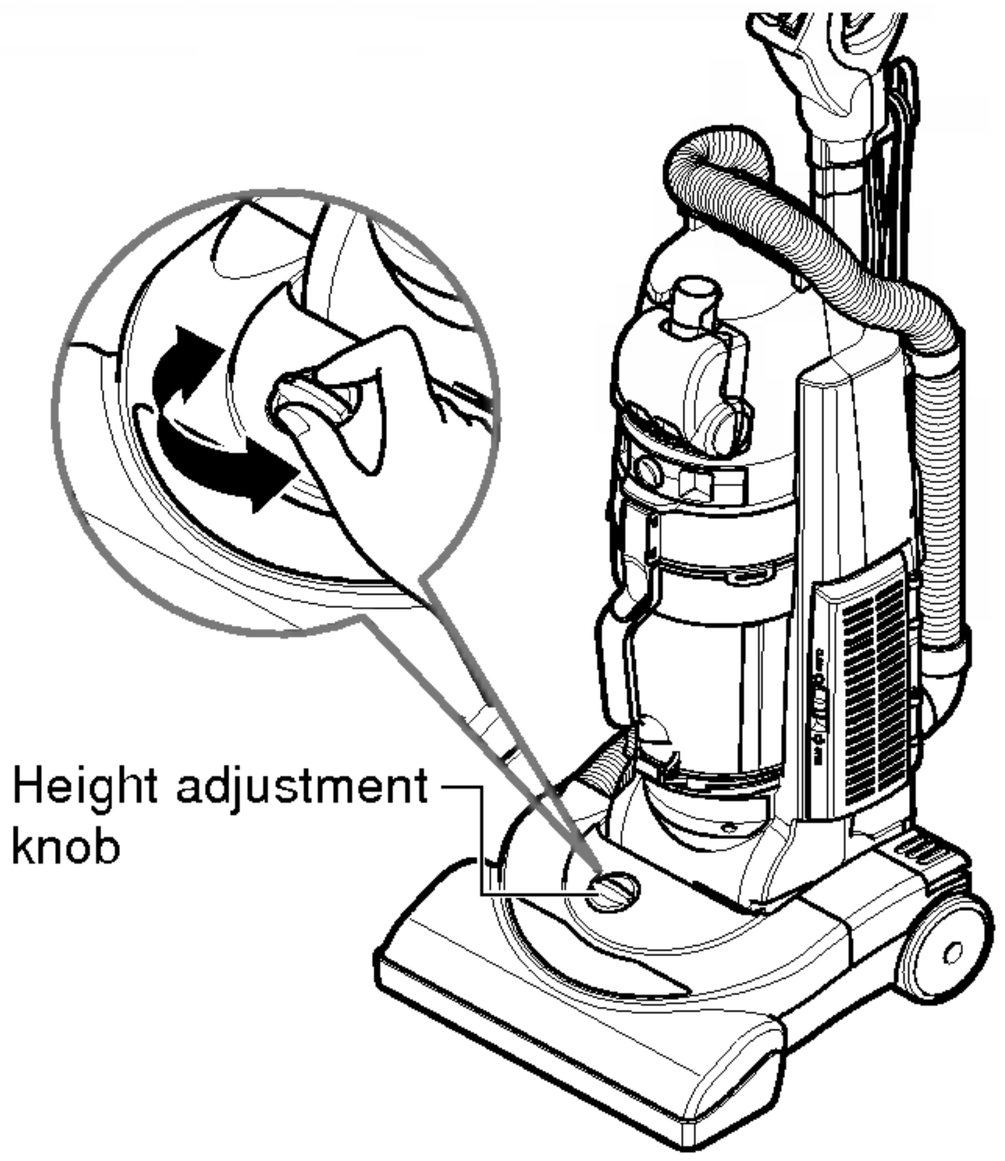

ATTACHMENT USE CHART

ATTACHMENT	CLEANING AREA				
	Furniture*	Between Cushions*	Drapes*	Stairs	Walls
DUSTING BRUSH 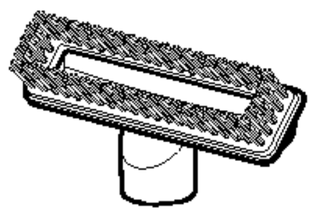	X	X	X	X	X
CREVICE TOOL 		X		X	X
MINI NOZZLE 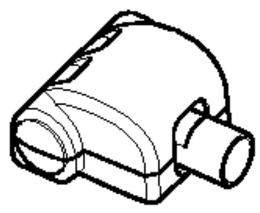		X		X	X

* Always clean attachments before using on fabrics.

VACUUMING TIPS

Carpet edges

Use attachments such as crevice tool, dusting brush, Mini-nozzle on carpet edges.
See page 7, 8

WARNING

Personal Injury Hazard

Use care if vacuum cleaner is placed on stairs. If it falls, personal injury or property damage could result.

ATTACHMENTS

To use attachments

1) Place the cleaner on a flat surface.
   Remove the wand off the body by grasping and rotating while pulling up.
2) Set pile height to high
3) Place switch in "Agitator off" mode.(for VFA282HTR/S/B)
   Place switch in "Floor" mode.(for VFA272FTR/S/B)

Dusting brush:
Functions as a dusting brush,also an upholstery nozzle which is useful for furniture, shelves etc. Attach as shown.

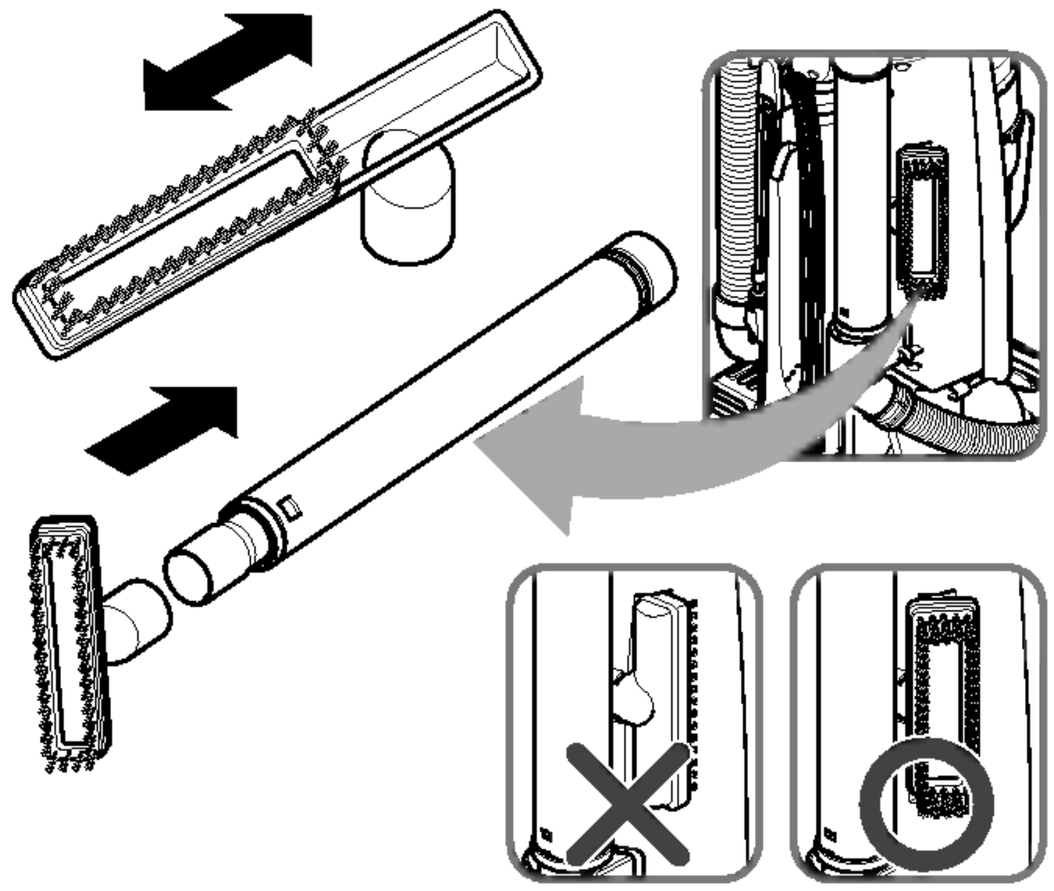

Crevice tool:
Crevice tool is attached as shown and used for corners, between cushions etc.

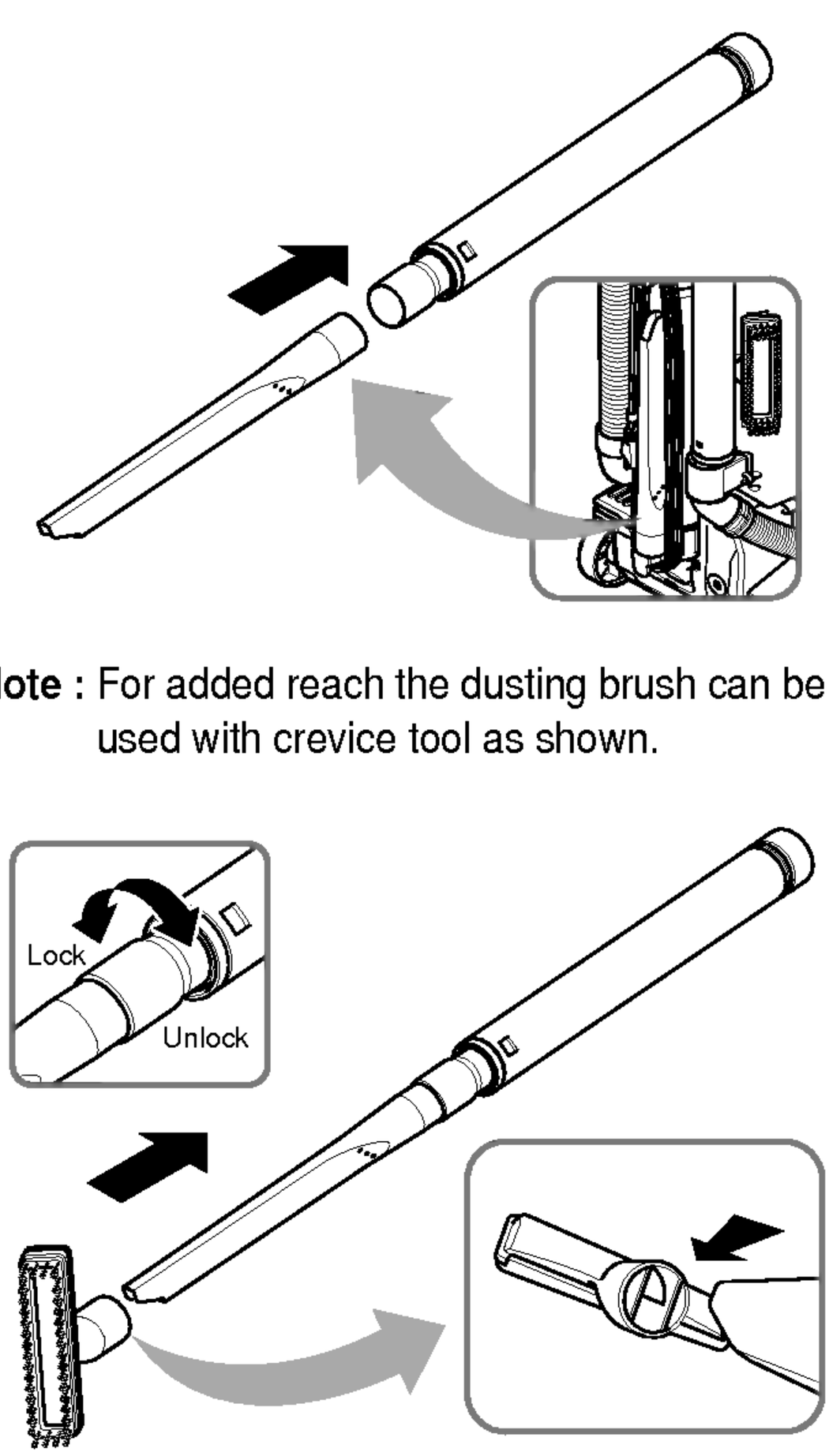

Note : For added reach the dusting brush can be used with crevice tool as shown.

Mini-nozzle
Mini-nozzle is attached as shown and used for stairs and other hard to reach places.

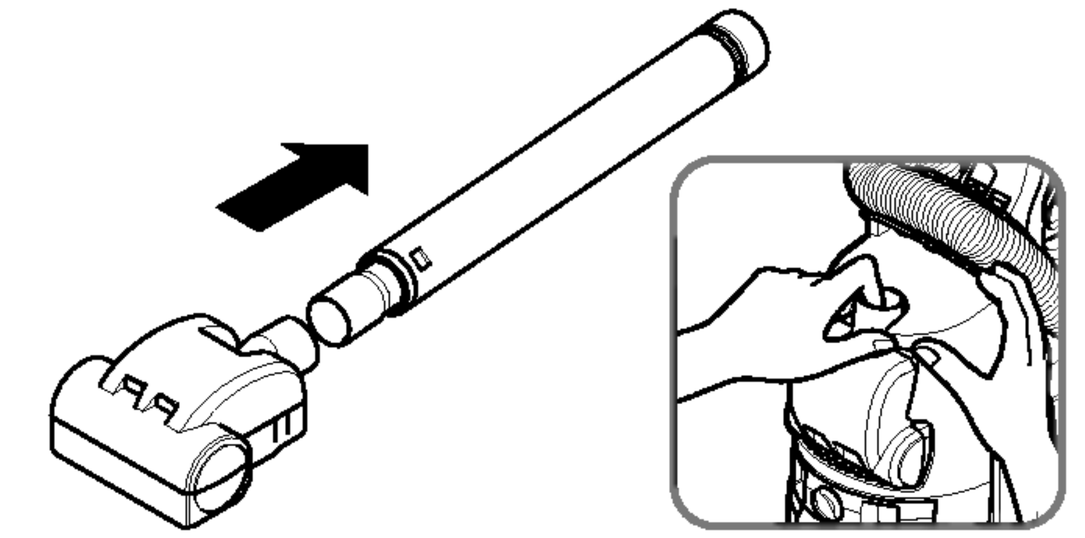

To remove Mini-nozzle cover:
Remove 2 screws on the bottom and take Mini-nozzle cover off as shown.

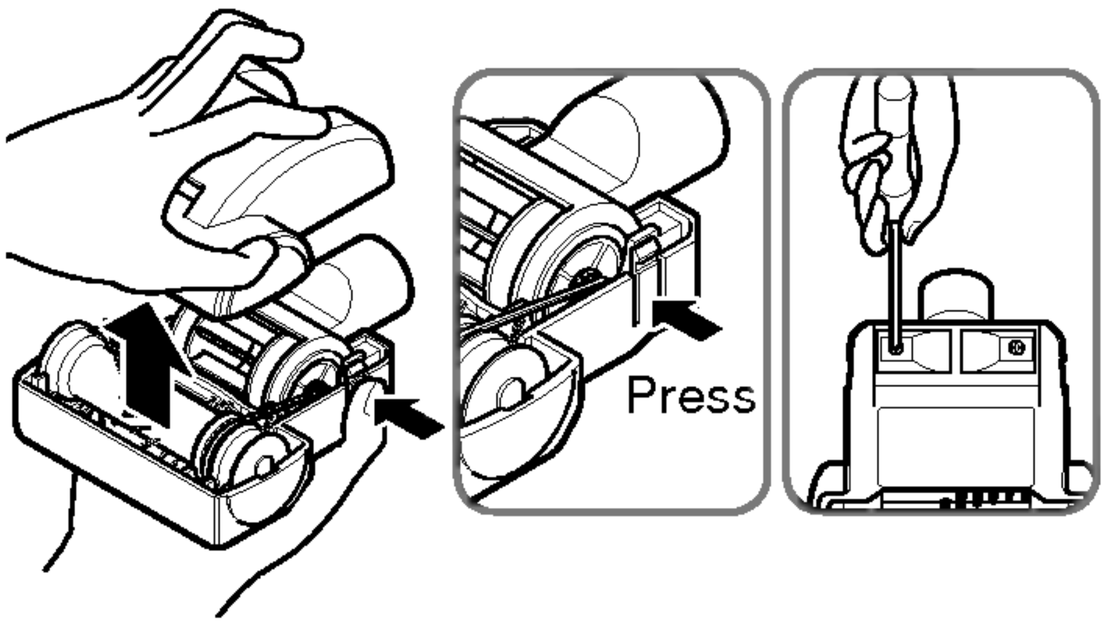

Frequently check and remove hair, string, and lint build-up the brush area. Failure to do so could cause damage to Mini-nozzle.

To extend wand:
Rotate the wand to unlock and pull.

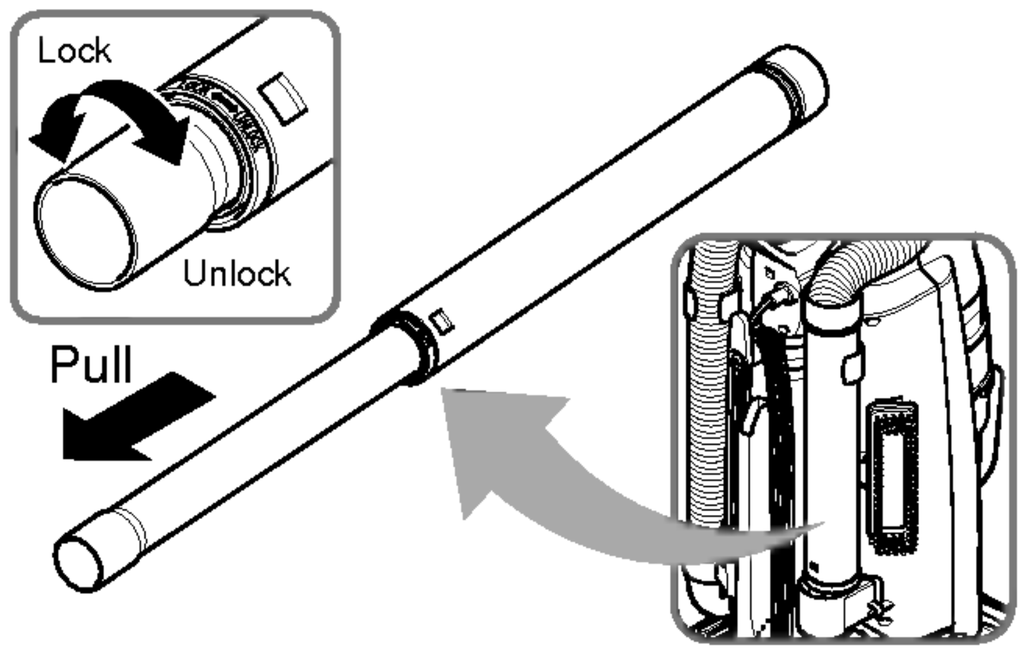

CAUTION

Do not pull the vacuum cleaner around the room by the hose. Property damage could result.

TO STORE ATTACHMENTS

Return the wand to its position on the body and the attachments to their holders.

PERFORMANCE FEATURES

Motor protector

This vacuum has a motor protector bypass valve which automatically opens to provide cooling air to the motor when a clog prevents the normal flow of air to the motor. If the by-pass valve opens to prevent motor overheating and possible damage to the vacuum, you will notice a change of sound as air rushes through the valve opening.

NOTE: Do not block motor protector.

To correct problem: Check for and remove clogs. See CLOG REMOVAL section.

NOTE: The motor protector may open when using attachments or when cleaning new carpet, due to reduced airflow caused by the attachments themselves or by new carpet fuzz filling the dust bin quickly.

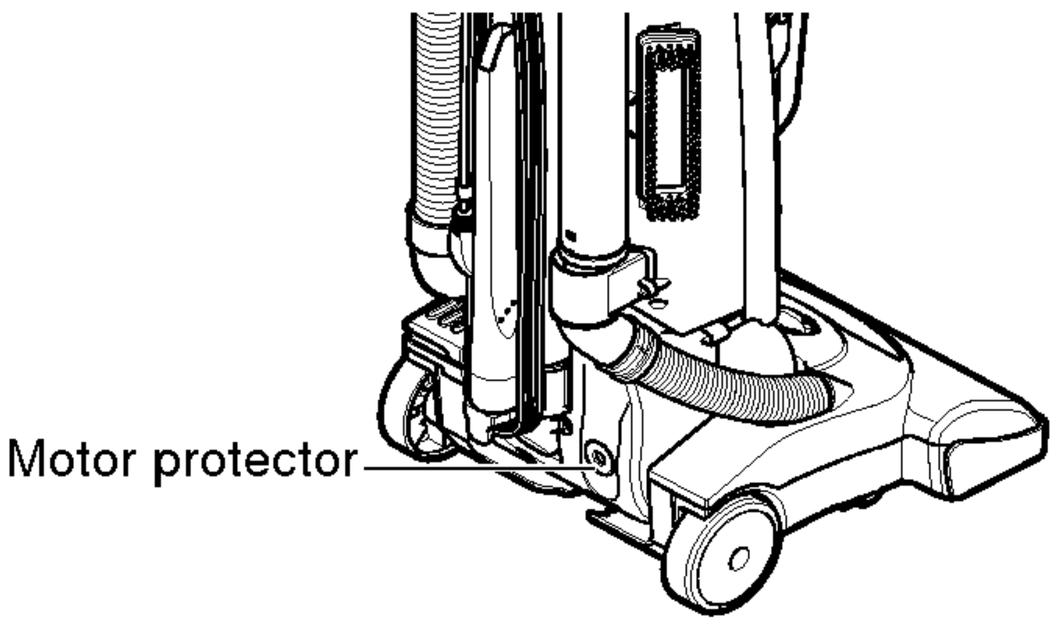

Thermal protector

This vacuum has a thermal protector which automatically trips to protect the vacuum from overheating. If a clog prevents the normal flow of air to the motor the thermal protector turns the motor off automatically to allow the motor to cool in order to prevent possible damage to the vacuum.

To correct problem: If this occurs, turn the vacuum off and unplug the power cord from the outlet to allow the vacuum to cool.
Check for and remove clogs, if necessary.
Wait approximately thirty(30)minutes and plug the vacuum in and turn back on to see if the motor protector has reset. The thermal protector system will not reset untill the vacuum has cooled down.

VACUUM CLEANER CARE

Always follow all safety precautions when cleaning and servicing the vacuum cleaner.

WARNING

Electrical shock and personal injury hazard.

Disconnect electrical supply before servicing or cleaning the unit. Failure to do so could result in electrical shock or personal injury from cleaner suddenly starting.

VACUUM STORAGE

To store the vacuum cleaner when it is not used, assemble its cord and return its telescopic handle to its lower space saving position.

WARNING

Electrical shock and personal injury hazard.

Wrapping the cord too tightly puts stress on the cord and can cause cord damage. A damaged cord is an electrical shock hazard and could cause personal injury or damage.

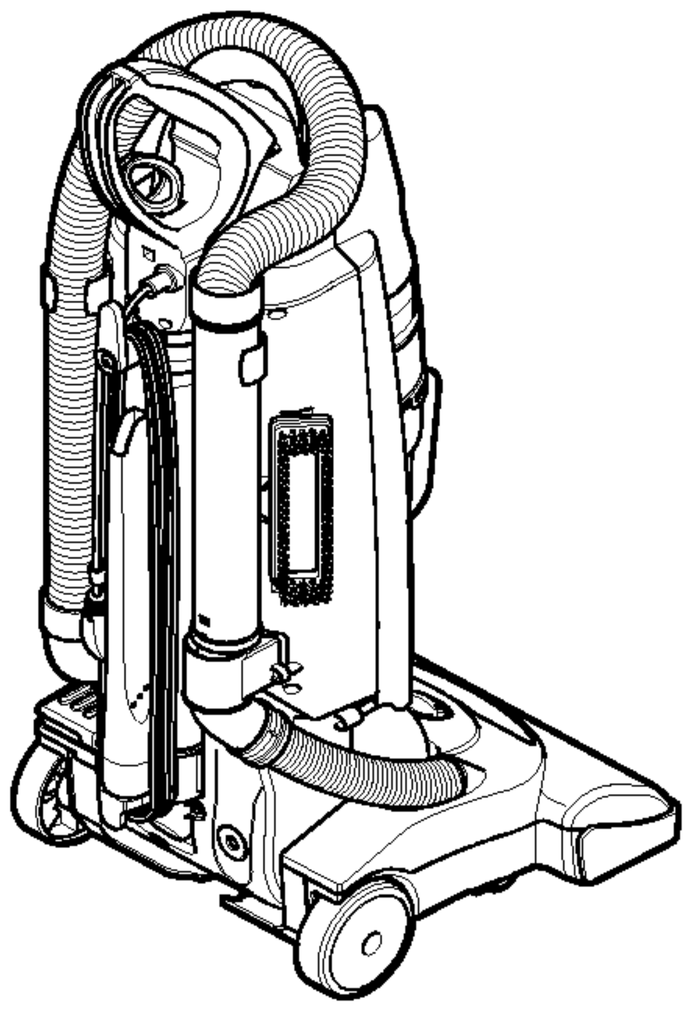

DUST BIN ASSEMBLY

Dust bin lid

The dust bin lid covers up the dust bin.

Blade

Blade traps large dirt and debris that is picked up by the suction.

Bottom plate

Used to throw dust out of the bin.

Bottom plate lever

Used to open the bottom plate for dust and debris disposal.

Dust bin

Where dirt is collected.

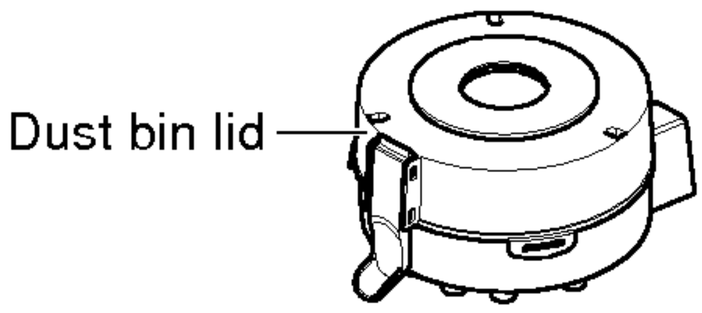

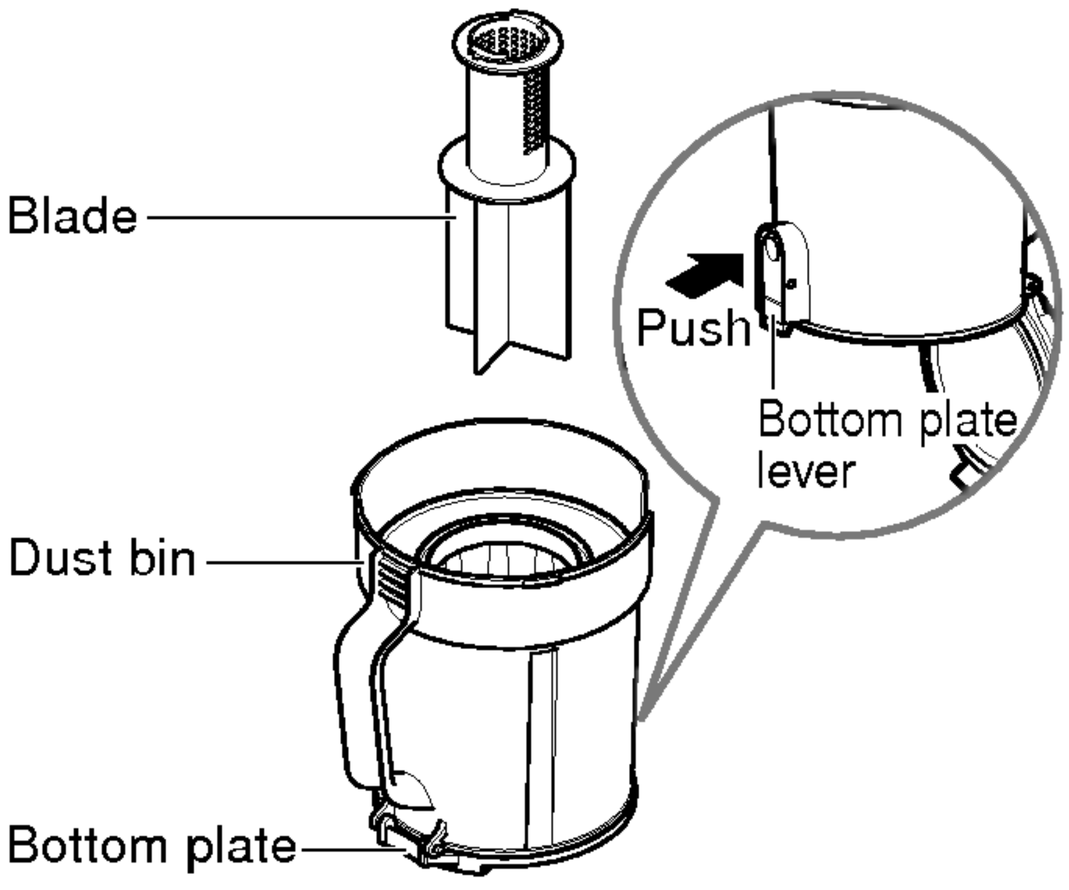

DUST BIN CLEANING

For best perfornance always empty the dust bin when the dirt level reaches the "MAX" line.

WARNING

Electrical shock and personal injury hazard.

Always unplug power cord from electrical outlet before performing any service on vacuum.

TO REMOVE DUST BIN, press the dust bin release lever until it snaps, and slide the bin out of cleaner.

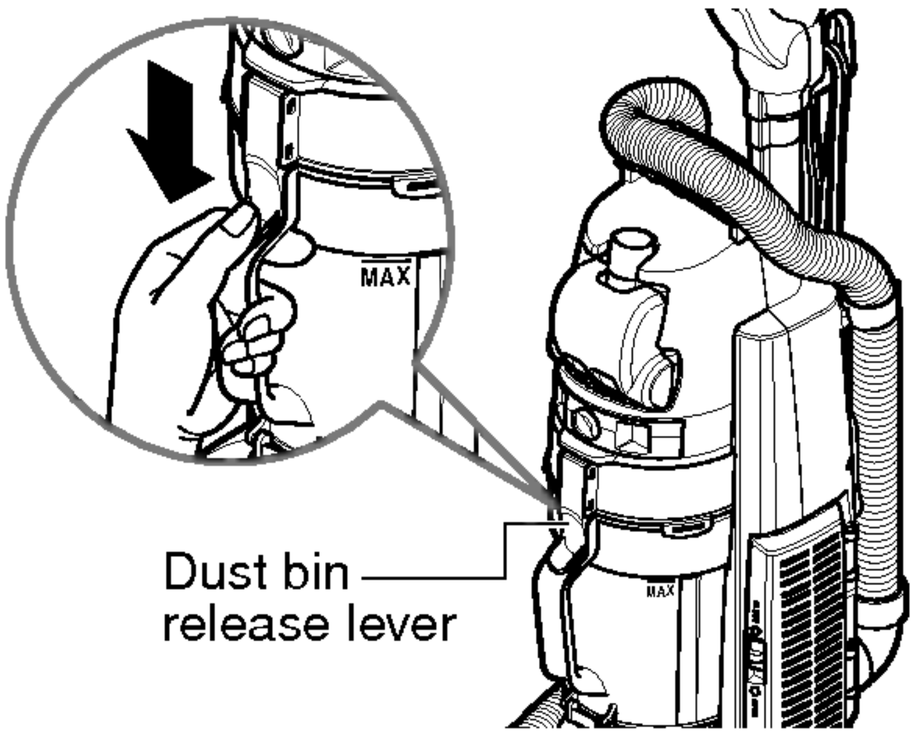

TO EMPTY DUST BIN, press the bottom plate lever as shown. If dust still remains on the inner part of dust bin, separate blade from dust bin lid and remove dust.

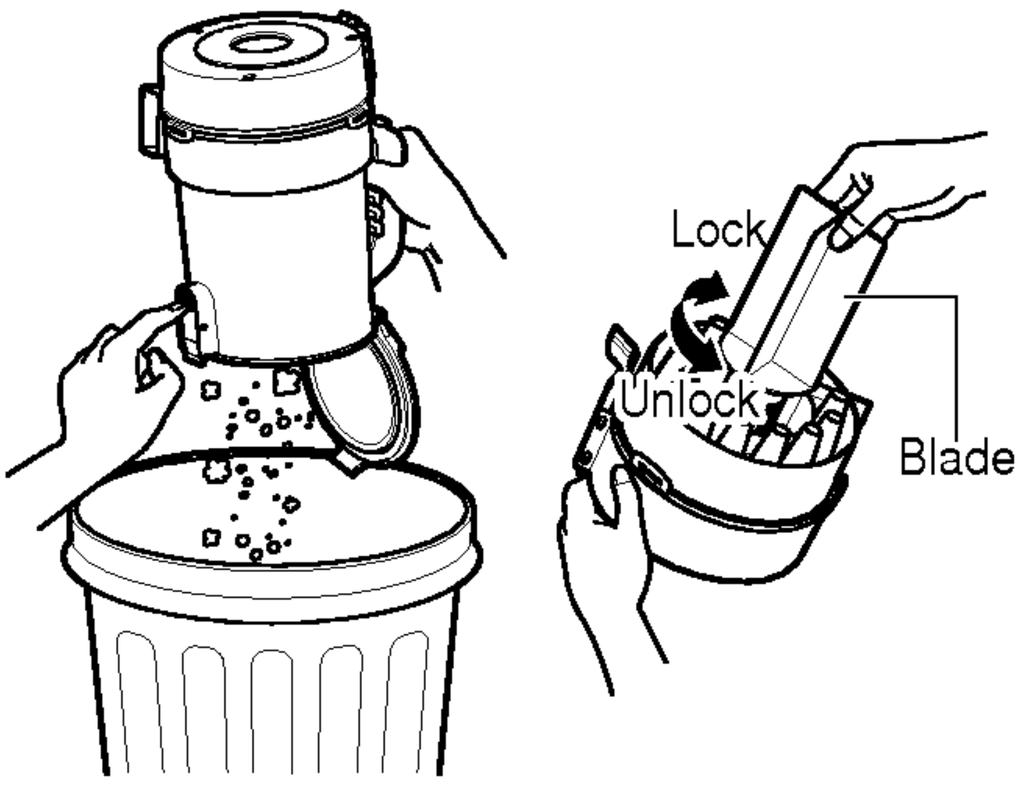

Note : When replacing the dust bin in the vacuum you need to slide and snap it. Make sure that dust bin is fully engaged otherwise suction power could be low.

TO CLEAN DUST BIN remove 3 catches on dust cap and separate dust bin lid from dust bin and blade as shown.

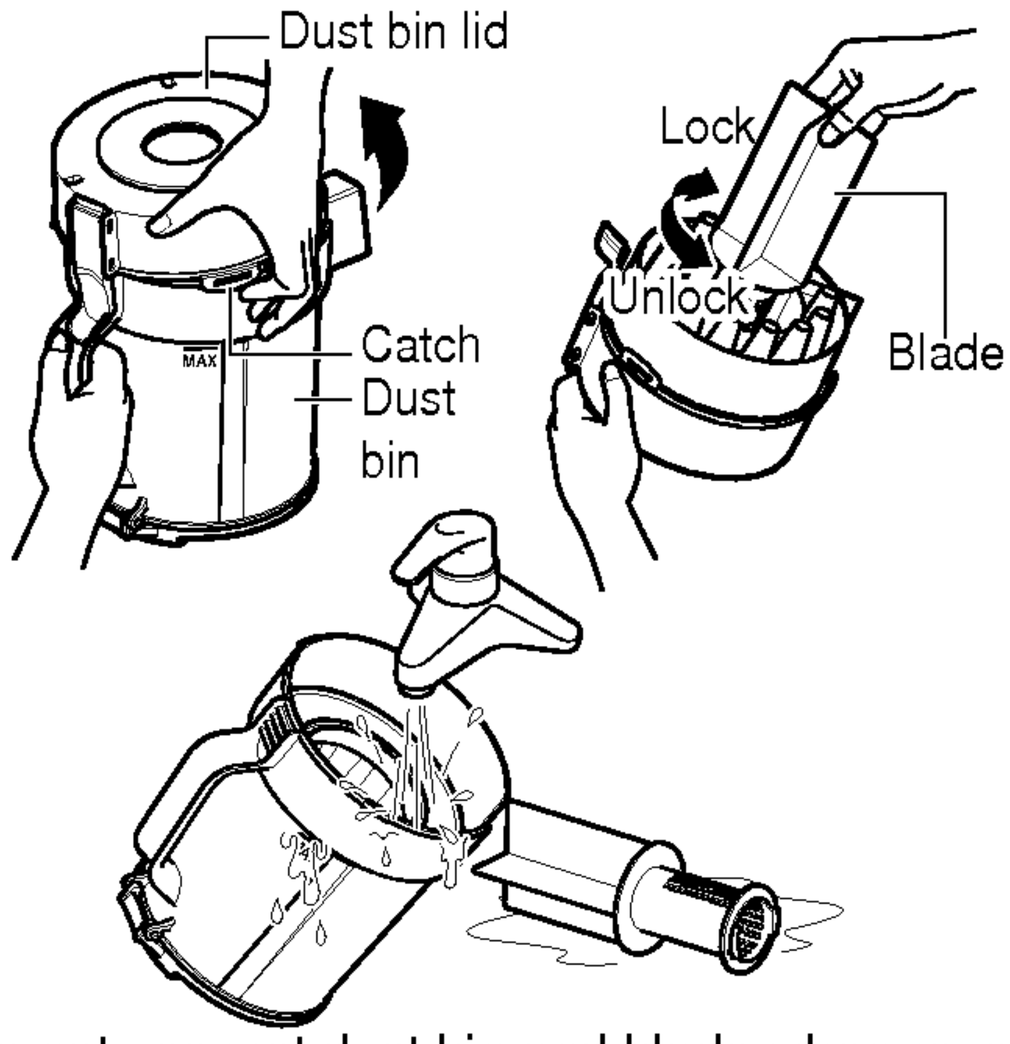

Do not use wet dust bin and blade when reuse, dry completely.

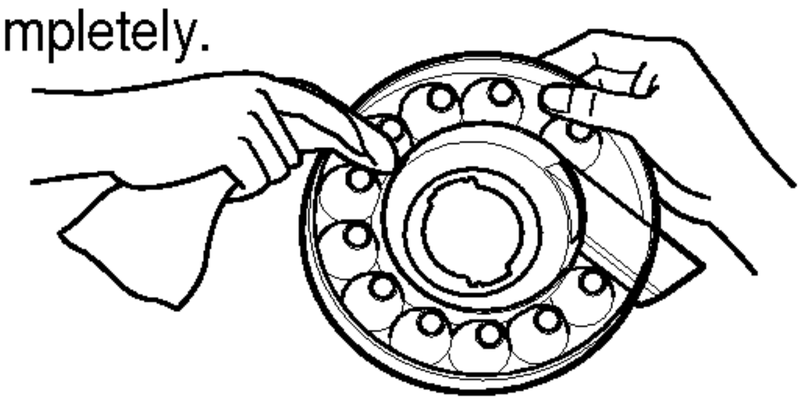

Clean dust bin lid with a cloth and brush to remove fluff or debris. and DO NOT USE ANY LIQUID AND WATER.

Align triangle on dust bin lid with triangle on blade and rotate blade to lock it into place.

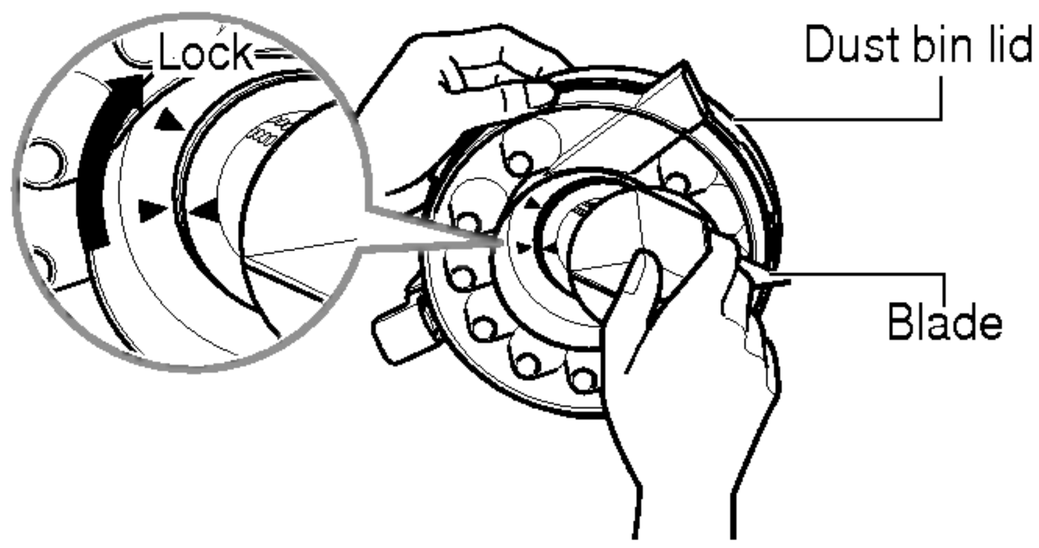

Press the dust bin lid until 3 catches click.

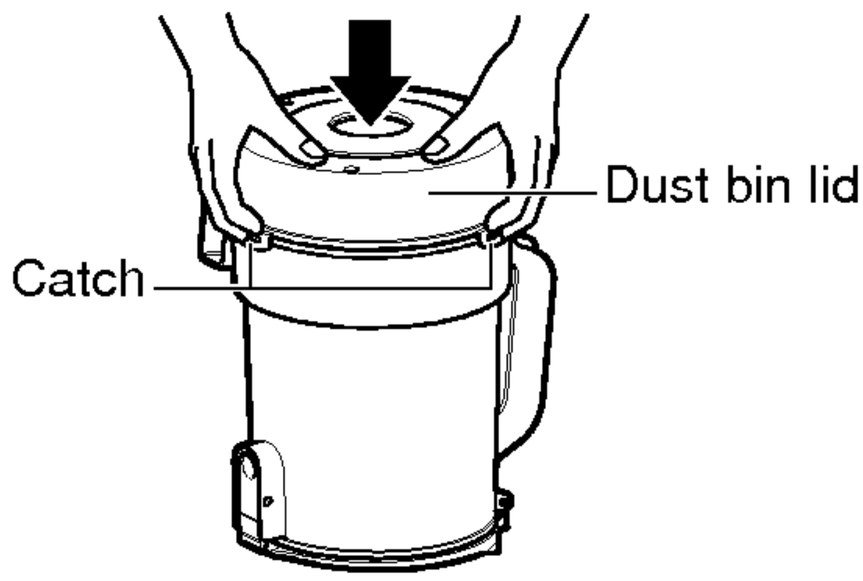

FILTERS CLEANING / CHANGING

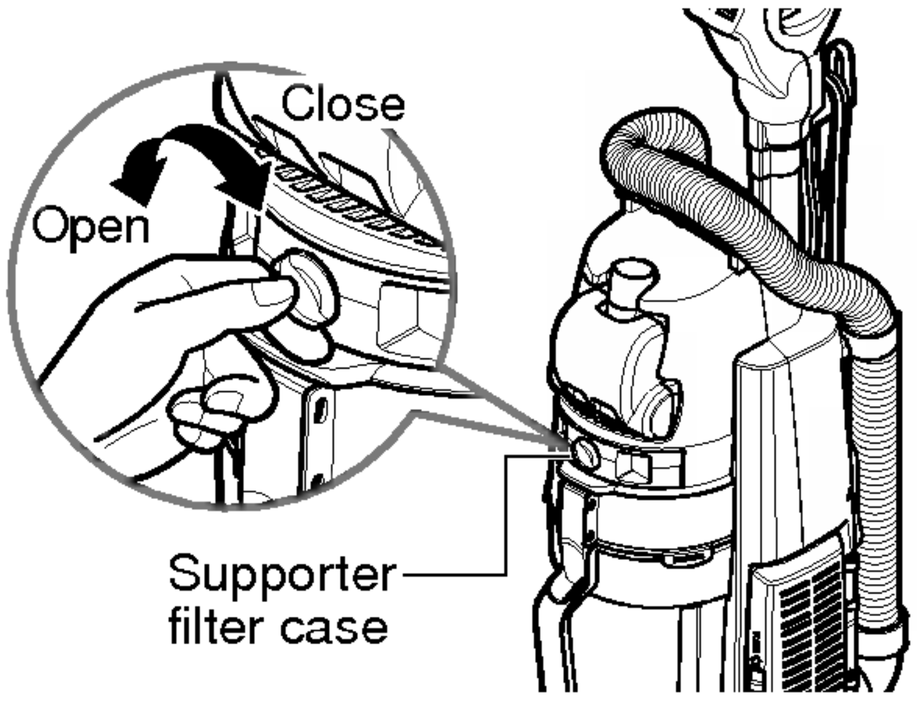

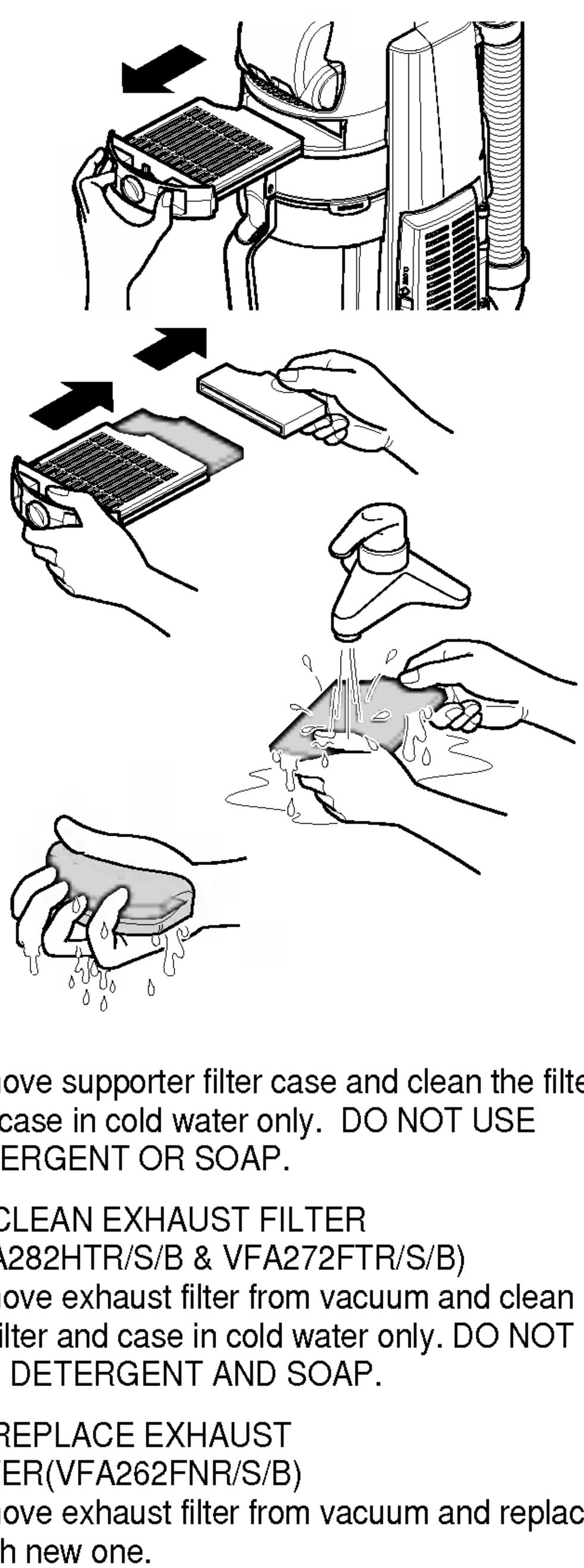

Remove supporter filter case and clean the filter and case in cold water only. DO NOT USE DETERGENT OR SOAP.

TO CLEAN EXHAUST FILTER
(VFA282HTR/S/B & VFA272FTR/S/B)
Remove exhaust filter from vacuum and clean the filter and case in cold water only. DO NOT USE DETERGENT AND SOAP.

TO REPLACE EXHAUST FILTER(VFA262FNR/S/B)
Remove exhaust filter from vacuum and replace it with new one.

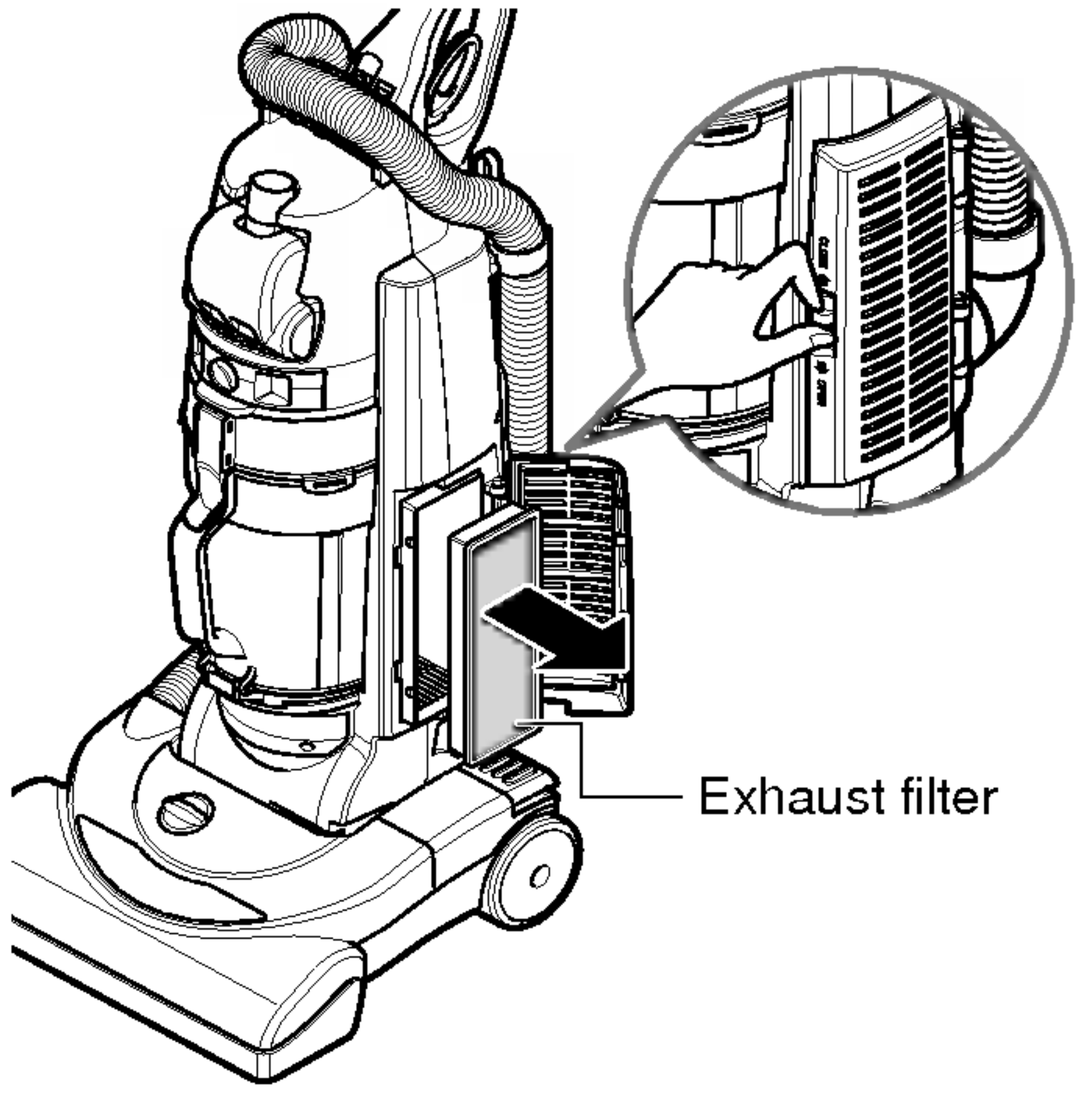

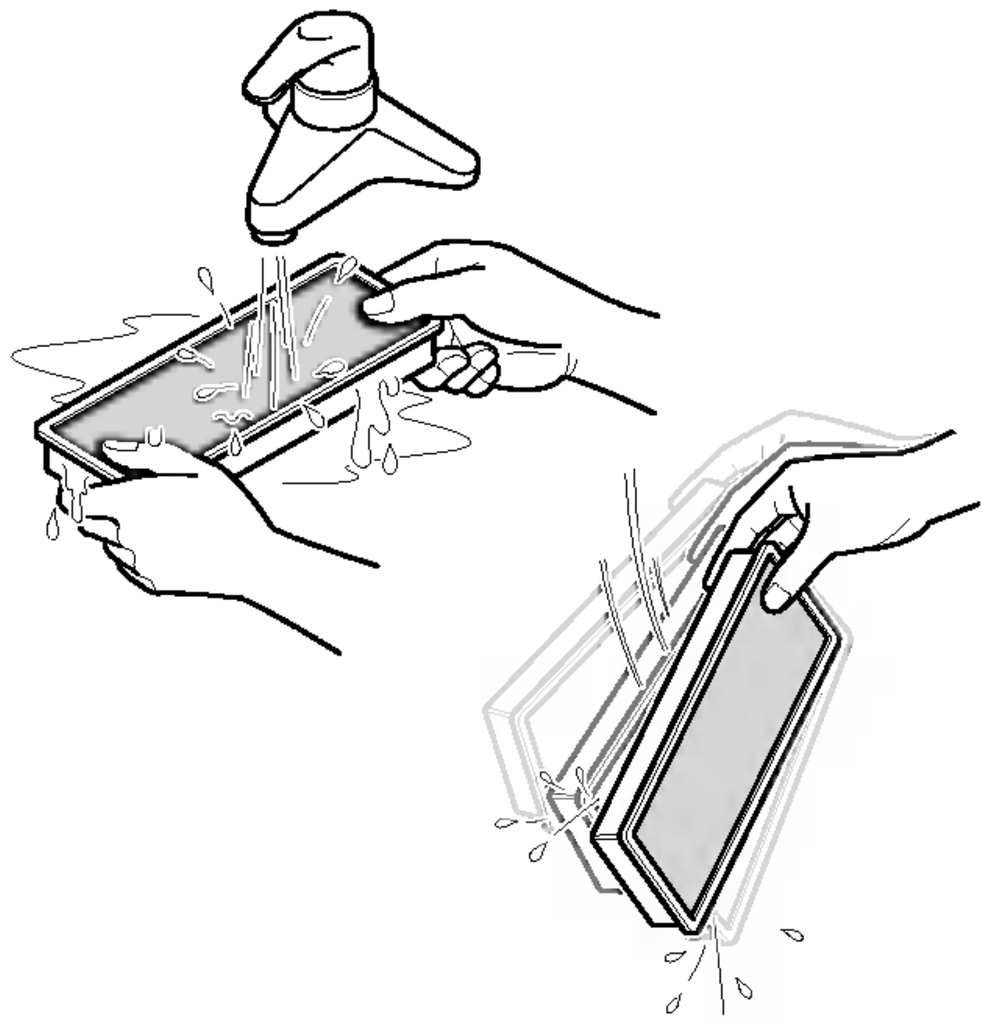

Allow exhaust filter to dry 24 hours before putting them back. Make sure that the filters dry completely.

FOR OPTIONAL PERFORMANCE, CHECK FILTERS FREQUENTLY AND CLEAN WHEN DIRTY.

CAUTION

Wet filter can cause permanent damage to cleaner.
Ensure that all filters dry completely.

The cycle of the cleaning.
- **Filter - Every 2 months.**
- **Exhaust filter - Once a year.**

BELT CHANGING AND AGITATOR CLEANING

WARNING

Electrical shock and personal injury hazard.

Disconnect electrical supply before servicing or cleaning the unit. Failure to do so could result in electrical shock or personal injury from cleaner suddenly starting.

Frequently check and remove hair, string, and lint build-up in the agitator brush area. If build-up becomes excessive, follow the steps below. Should the belt become loose or should it break, follow the belt removal instructions.

NOZZLE BOTTOM PLATE REMOVAL / INSTALLATION

Disconnect electrical supply, press body release pedal and rotate body down, so the cleaner is laying flat on the floor.

To protect the floor surface place paper under the nozzle and work area.

Remove 4 screws from the bottom as shown. Remove the bottom plate as shown.

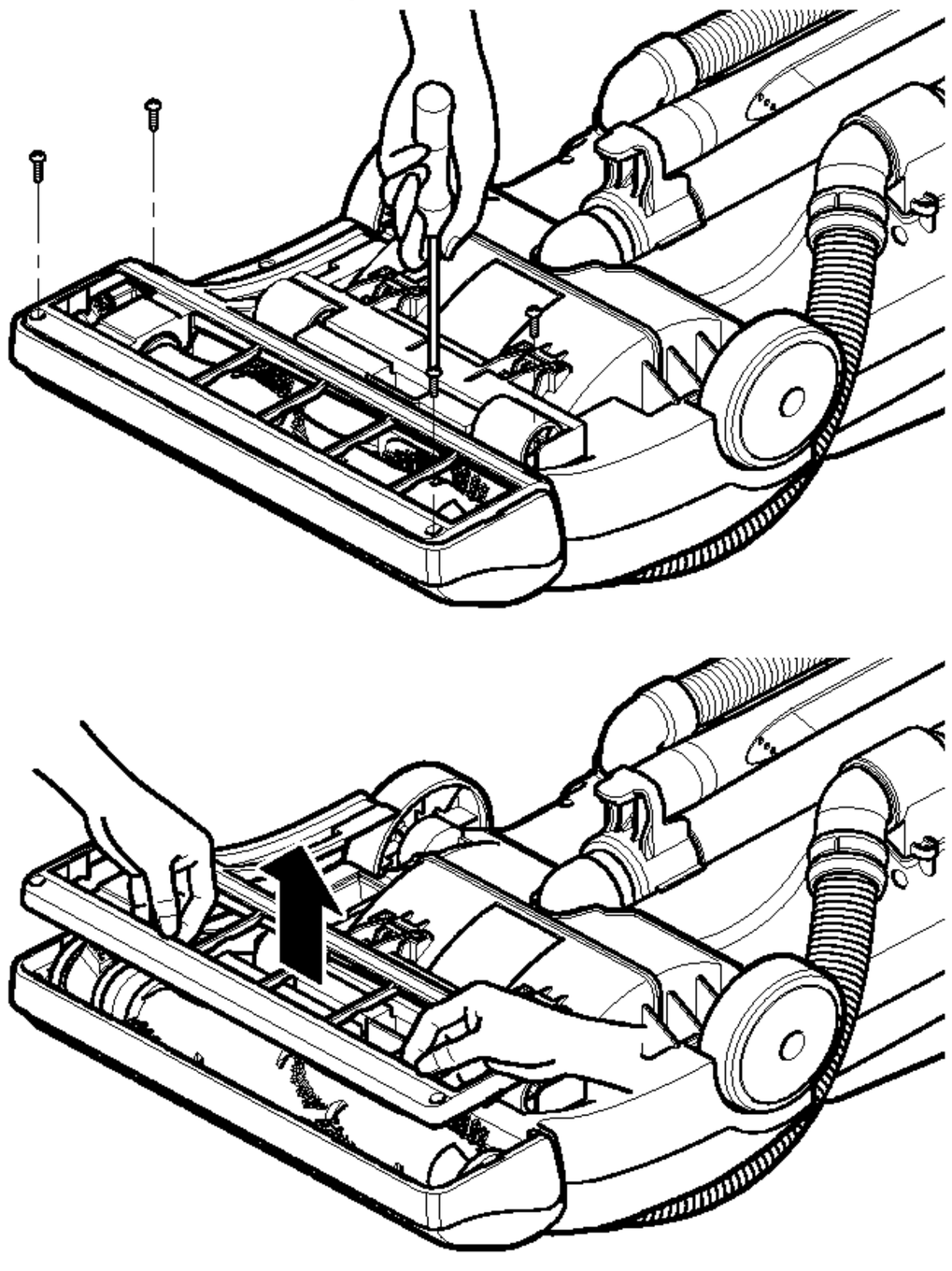

Check and remove hair, string, ad lint build-up in the agitator brush area. To replace nozzle bottom plate, should regulation be placed in its place and reinstall things you removed.

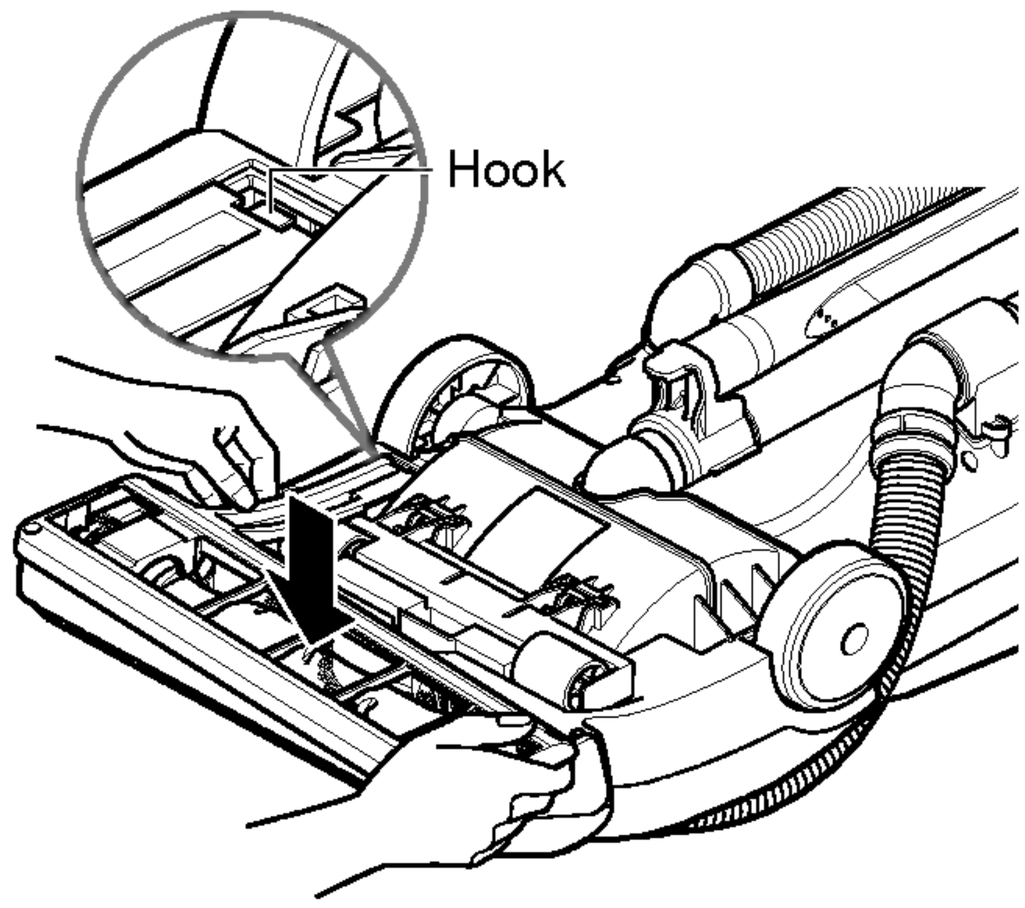

WARNING

Personal injury hazard

Always unplug the vacuum cleaner before cleaning the brush area as agitator may suddenly restart. Failure to do so can result in personal injury.

TO REMOVE BELT / CLEAN AGITATOR

Position hands on opposite ends of the agitator. If the belt is still attached to the agitator, there will be tension on it.

Carefully lift the right end of the agitator and then lift the other end.

Remove the worn or broken belt from the motor drive shaft and clean the agitator.

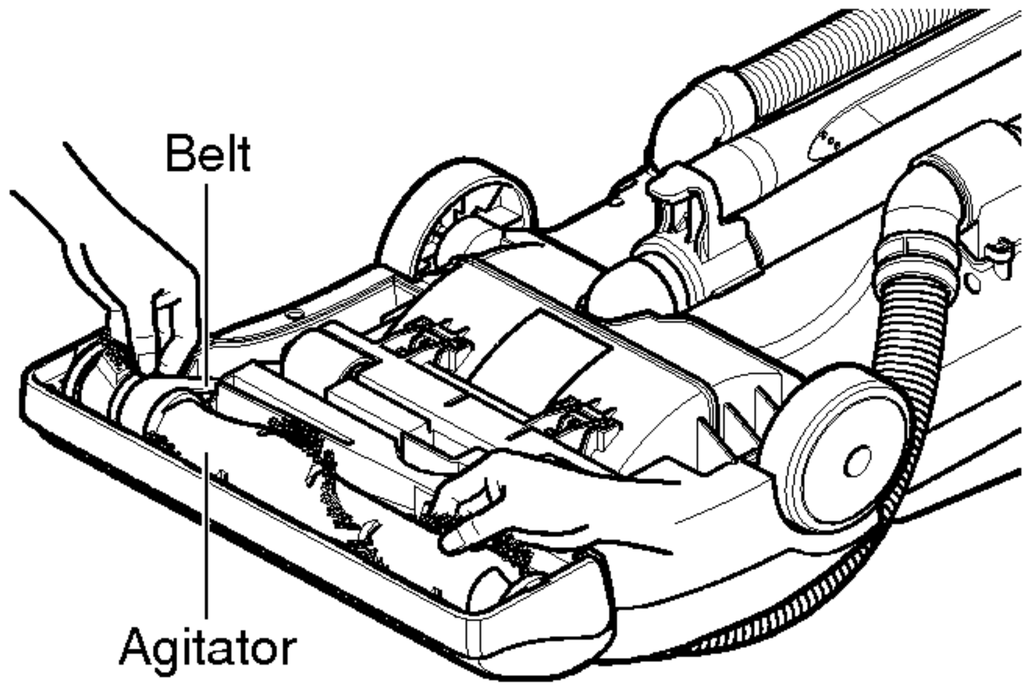

Remove string or hair that may be wrapped around the agitator.

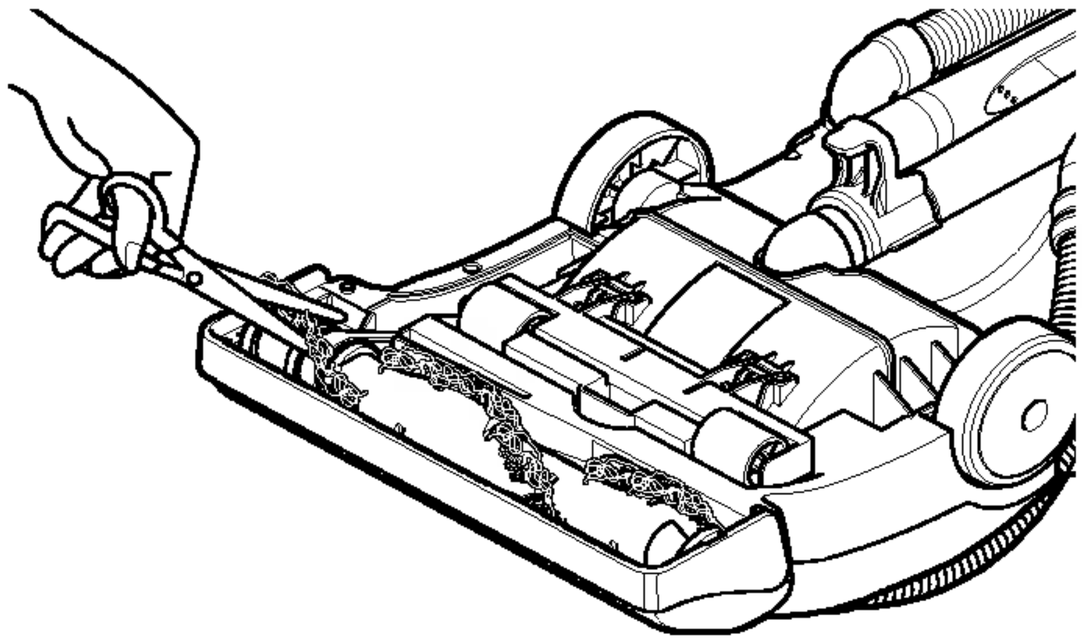

WARNING

Be careful when removing the agitator as the belt tension is high. Failure to do so could result in personal injury from the agitator releasing quickly and snapping away.

TO REPLACE BELT

Seat the left end of agitator into nozzle base.

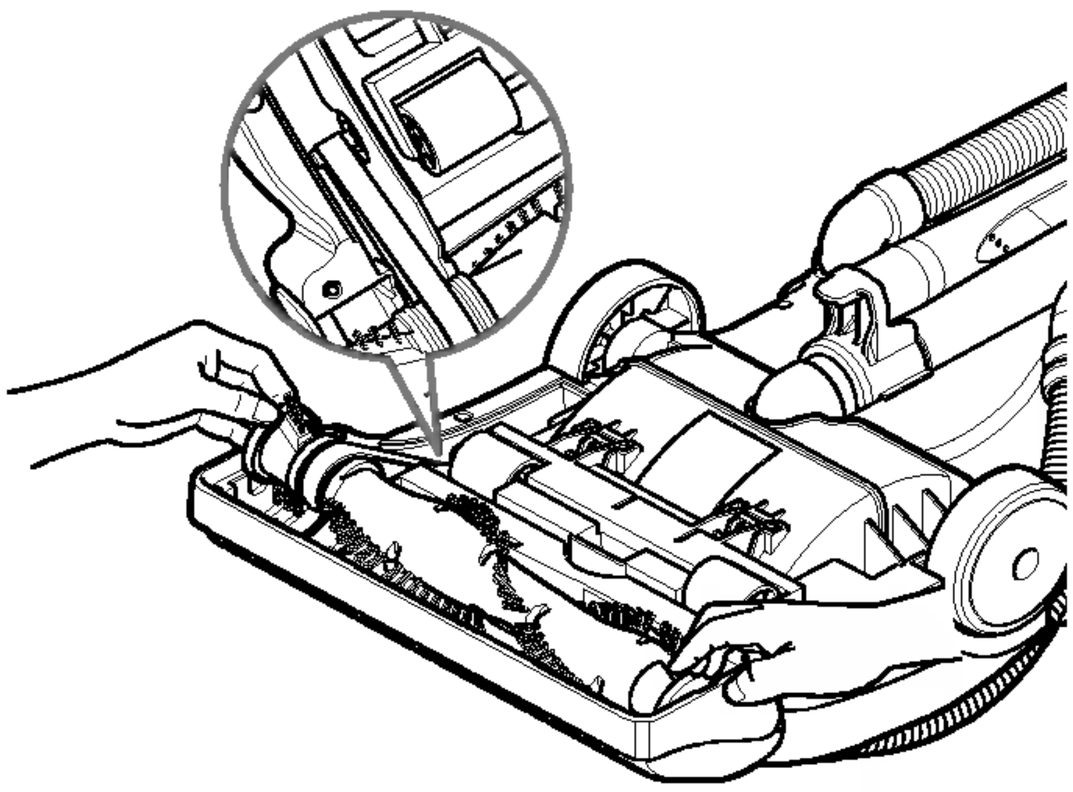

Loop the new belt on the motor shaft.

Loop the other end of belt onto the belt pulley on the left end of agitator.

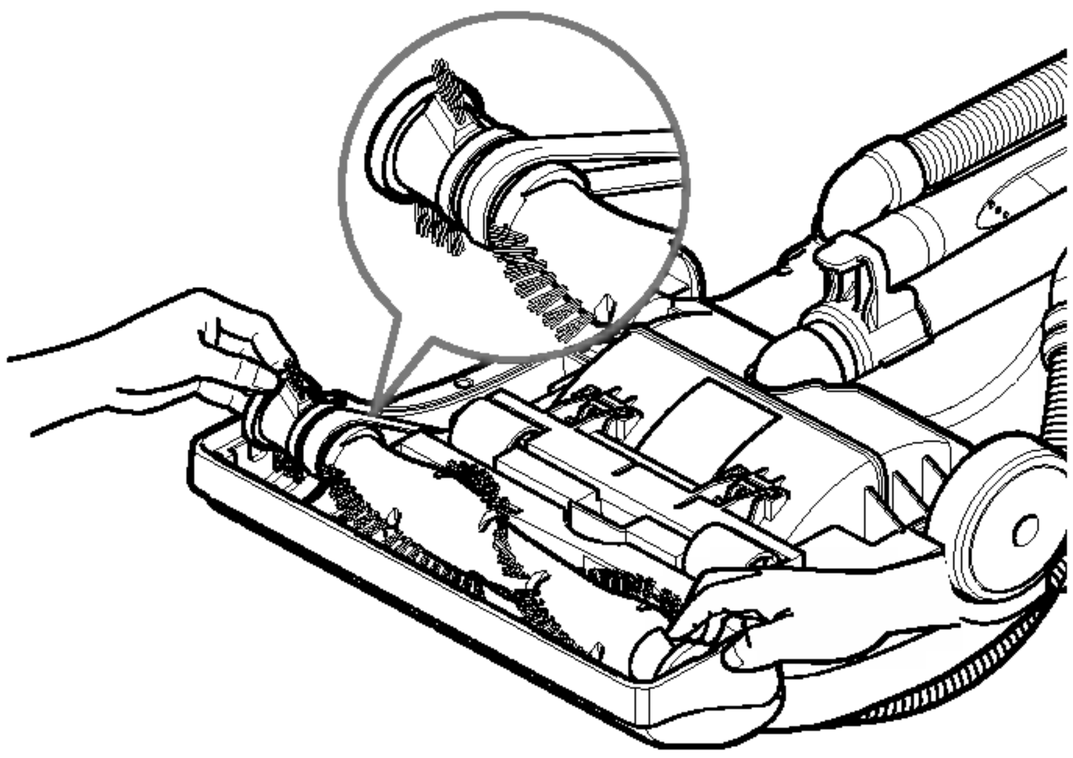

To seat agitator right end, pull both end of agitator forward and seat it into nozzle base.

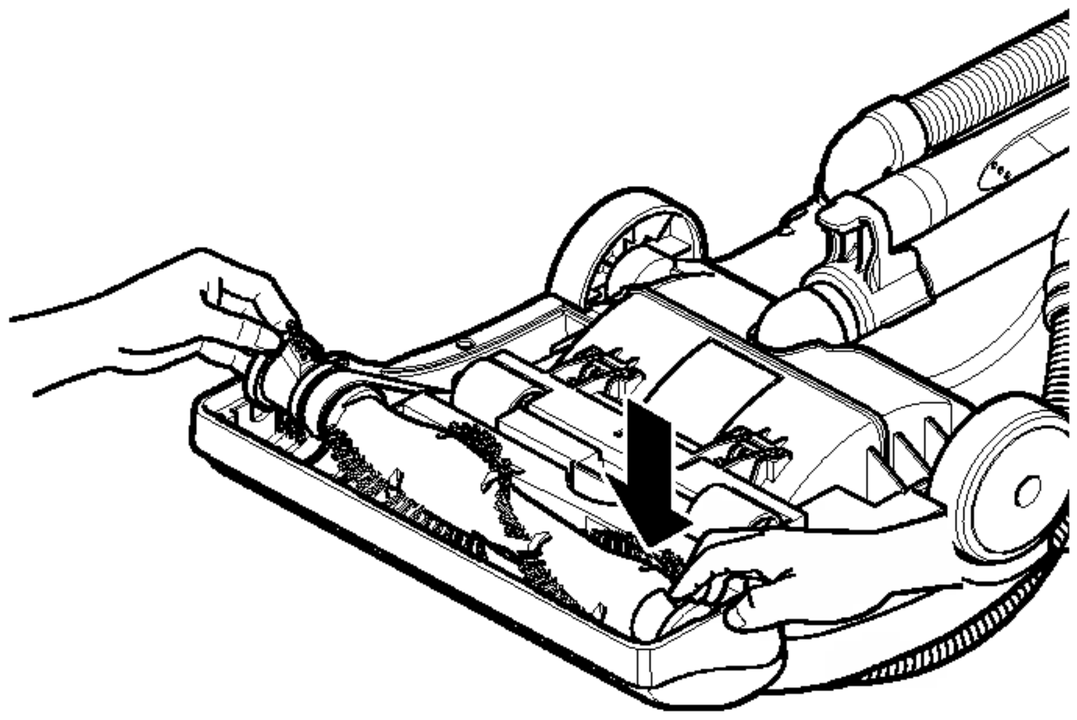

To seat agitator left end, put left end of agitator into slot in nozzle base as shown.

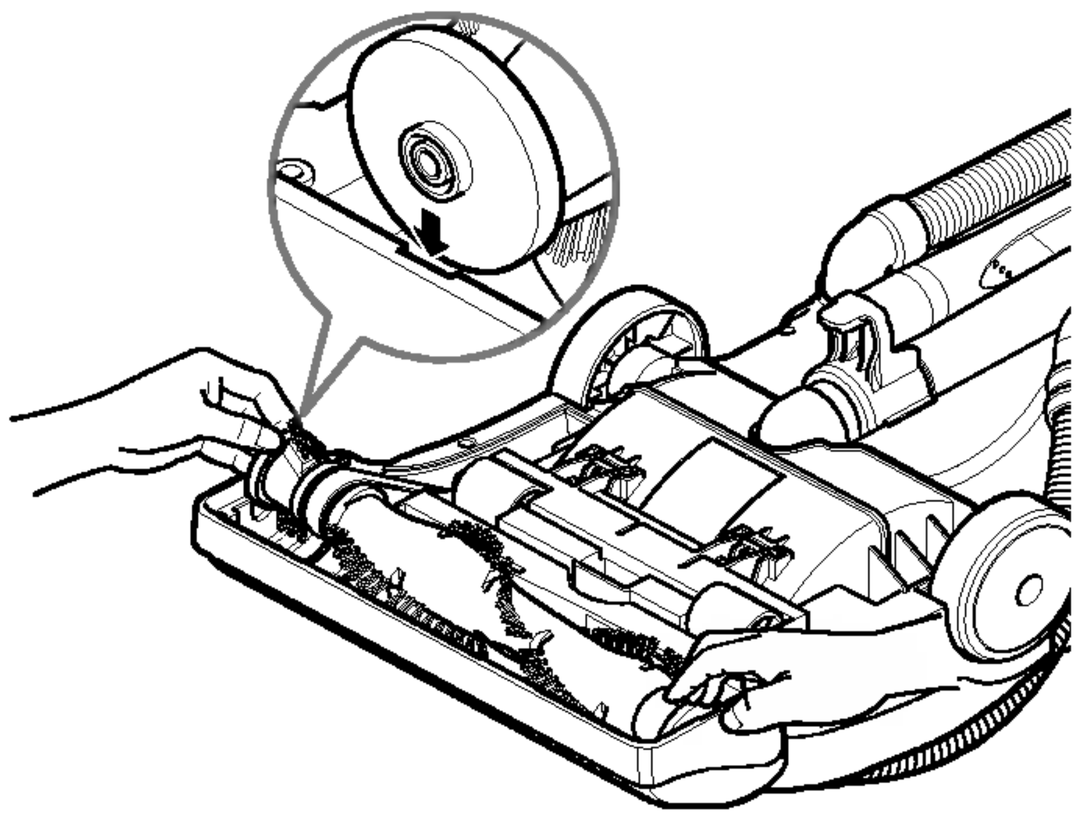

Press firmly, checking to see that each end is completely inserted.

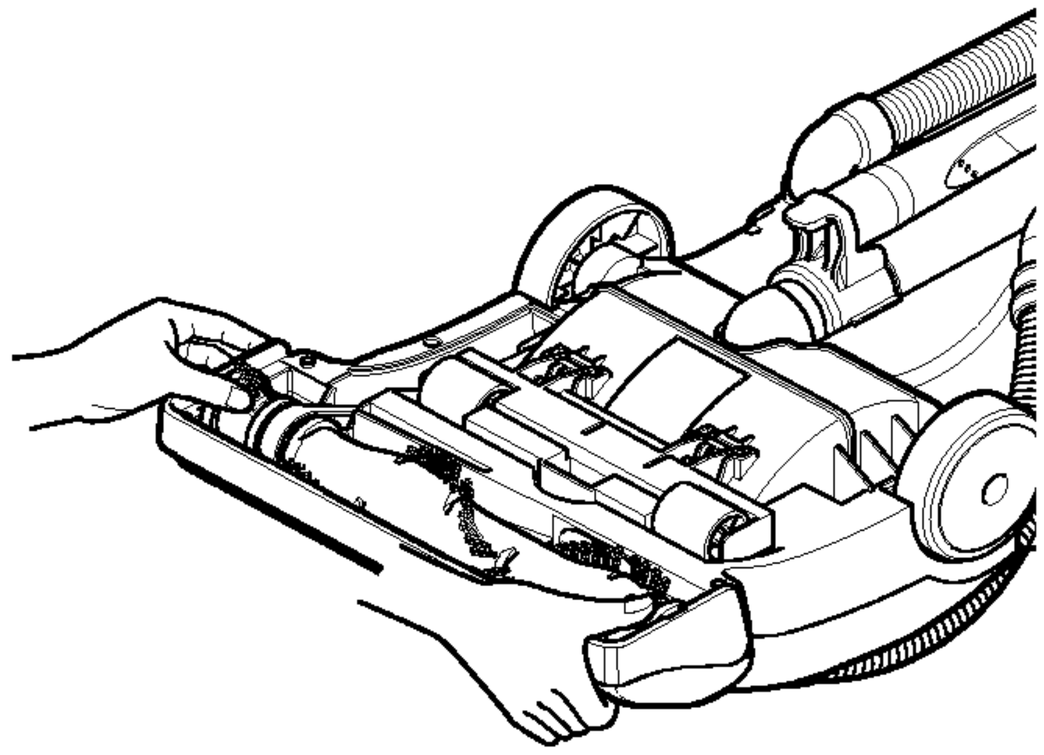

To replace the nozzle bottom plate, follow the NOZZLE BOTTOM PLATE REMOVAL / INSTALLATION section.(Page 13)

CLEANING EXTERIOR

Unplug power cord from wall outlet. Clean exterior using a clean, soft cloth that has been dipped in a solution of mild liquid detergent and water and wrung dry.

DO NOT drip water in the cleaner.

DO NOT clean tools in dishwasher or clothes washer. Wash tools in warm soapy water, rinse and air dry.

DO NOT use tools if they are wet.

REMOVING CLOGS

The hose located on the vacuum cleaner carries the dirt from the nozzle up to the dust bin. If the hose should become clogged :

Unplug vacuum. Remove the assembled wand, nozzle hose and check them.

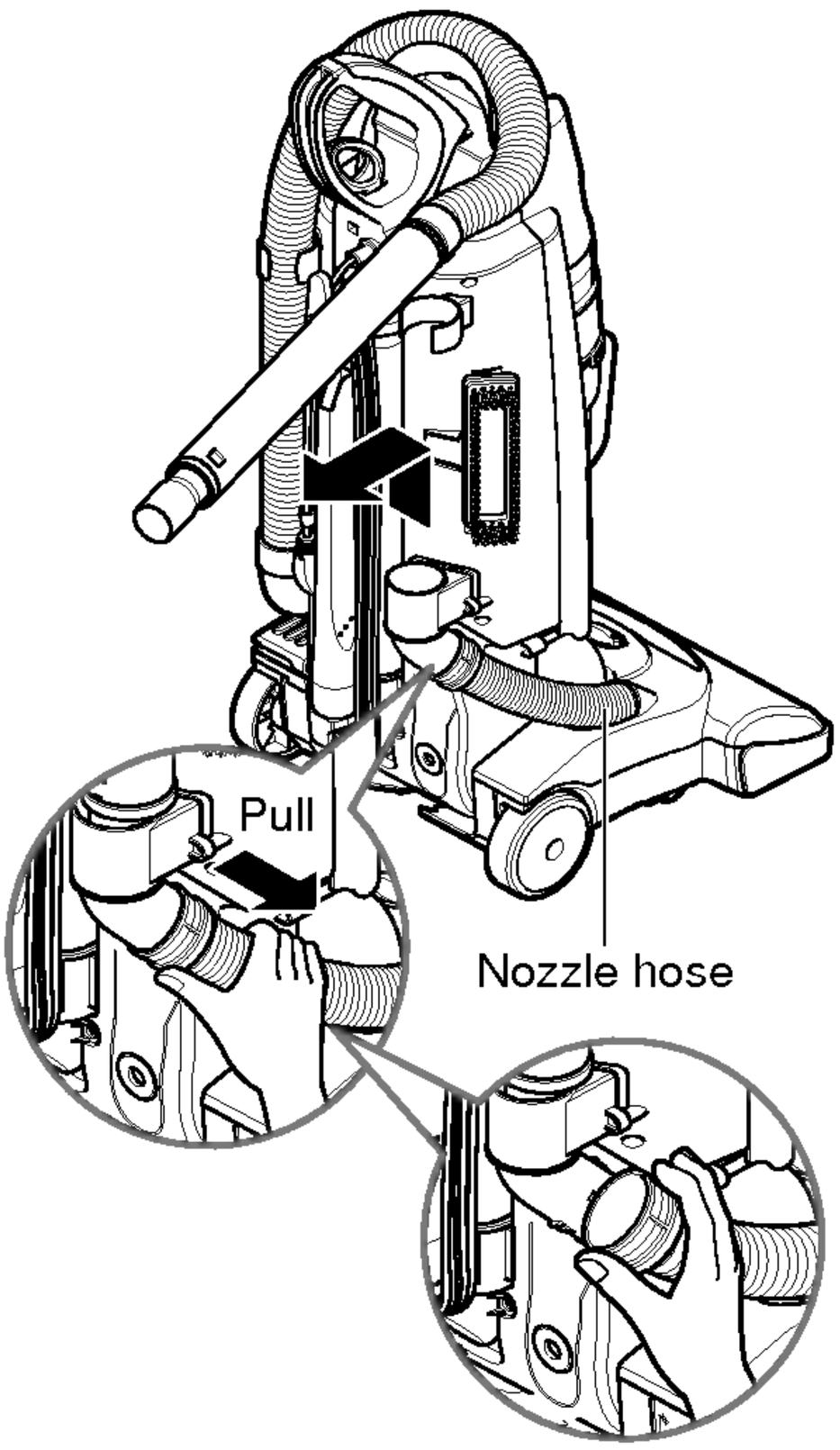

Check the base of the hose for clogging as shown.

Check suction inlet and filters for clogs.

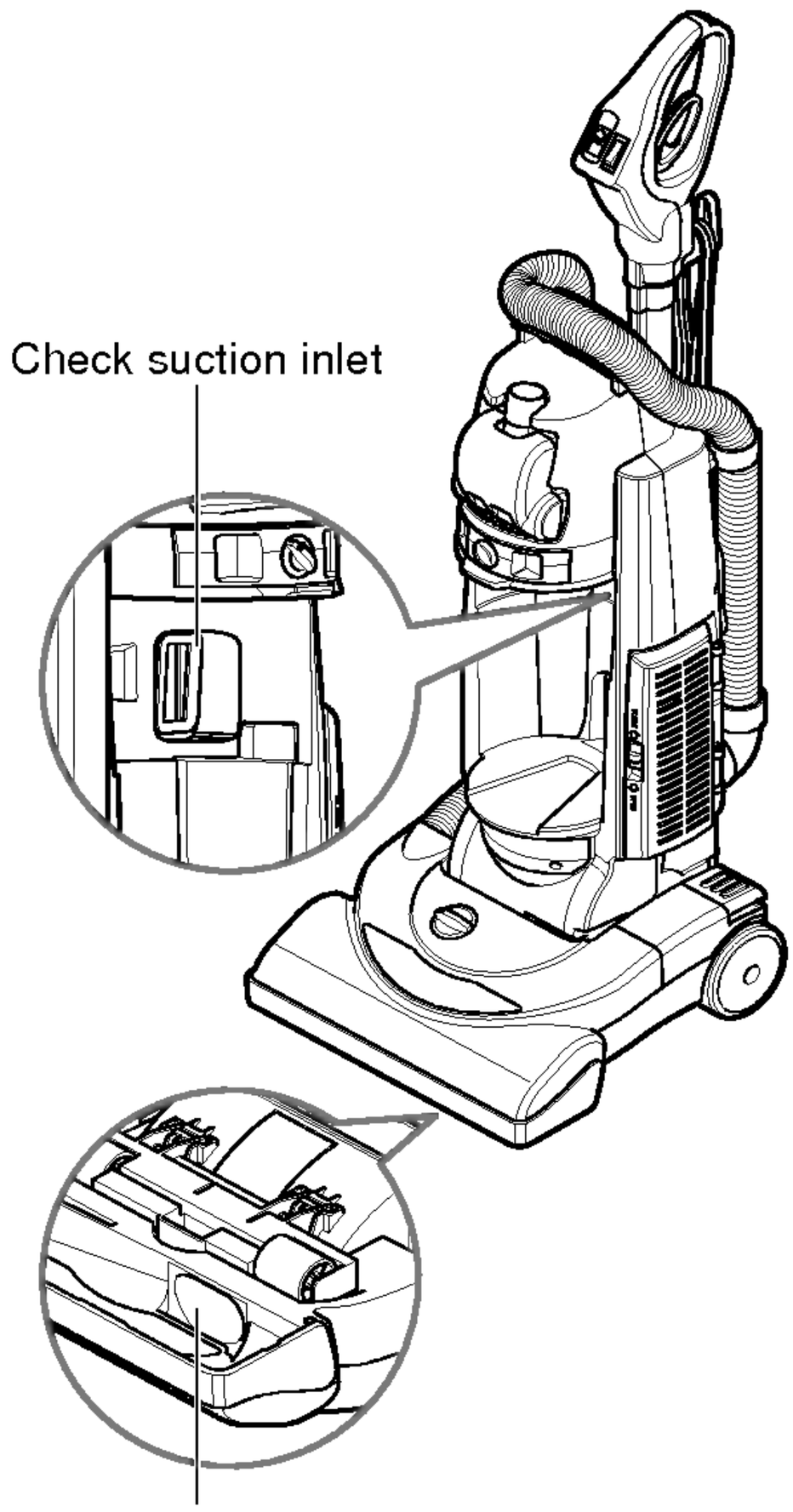

Note : Clogged filters can cause suction power to be low. To clean the filter, refer to FILTERS CLEANING / CHANGING section. (Page 12)

TROUBLESHOOTING

Review this chart to find do-it-yourself solutions for a minor performance problems. Additional service needed, other than those described in this owner's manual, should be performed at an authorized LG Electronics Service agency.

WARNING

Electrical shock and personal injury hazard.

Disconnect electrical supply before servicing or cleaning the unit. Failure to do so could result in electrical shock or personal injury.

PROBLEM	POSSIBLE CAUSE	POSSIBLE SOLUTION
CLEANER WILL NOT RUN	1. Unplugged at wall outlet. 2. Switch in off position. 3. Thermal protector activated.	1. Plug in firmly, check Motor protection system / fuse. 2. Push switch to from min to max(VFA282HTR/S/B). Push switch to floor or carpet mode(VFA272FTR/S/B). Push switch to on(VFA262FNR/S/B). 3. See "To correct problem", page 9.
POOR JOB OF DIRT PICKUP	1. Full or clogged dust bin. 2. Broken agitator belt. 3. Clogged hose or nozzle. 4. Hose not inserted fully 5. Worn agitator. 6. Hole in hose 7. Dust bin assembly improperly installed. 8. Belt not installed on motor shaft. 9. Motor protection system activated.	1. Empty dust bin and clean the filters. 2. Replace agitator belt. 3. Clean hose or nozzle area. 4. Insert hose. 5. Replace agitator. 6. Replace hose. 7. Properly install dust bin assembly. 8. Install belt on the motor shaft. 9. Check for clogs.
DUST ESCAPES THE DUST BIN	1. Dust bin assembly improperly installed.	1. Properly install dust bin.

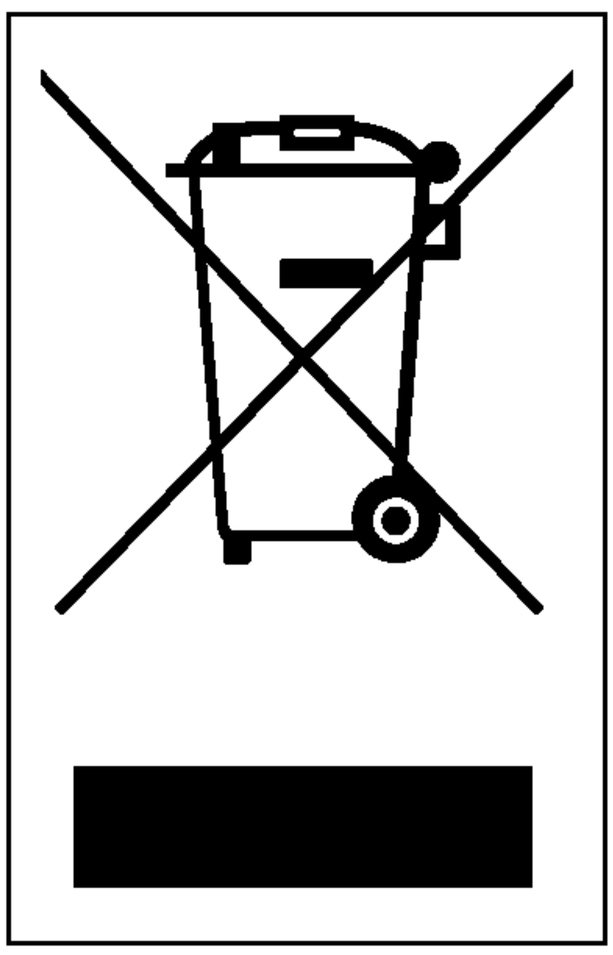

Disposal of your old appliance

1. When this crossed-out wheeled bin symbol is attached to a product it means the product is covered by the European Directive 2002/96/EC.
2. All electrical and electronic products should be disposed of separately from the municipal waste stream via designated collection facilities appointed by the government or the local authorities.
3. The correct disposal of your old appliance will help prevent potential negative consequences for the environment and human health.
4. For more detailed information about disposal of your old appliance, please contact your city office, waste disposal service or the shop where you purchased the product.

Note

Note

Note


LG Electronics Inc.