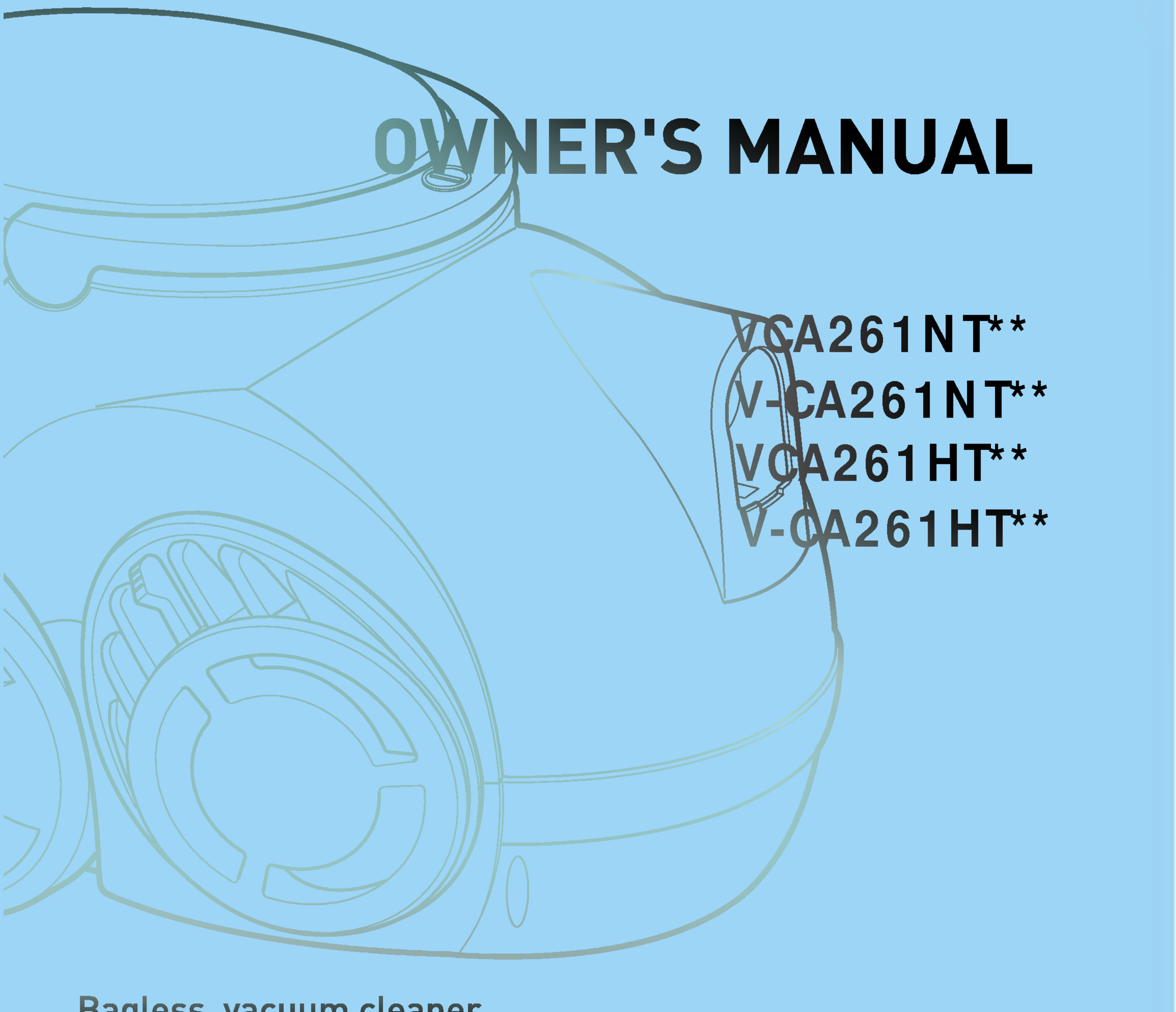

OWNER'S MANUAL

VCA261NT**
V-CA261NT**
VCA261HT**
V-CA261HT**

Bagless vacuum cleaner

Table of contents

Information for Your Safety.....3

How to Use.....4

Assembling cleaner 4

Using the cleaning head and Accessory Nozzles.....6

Emptying the Dust Chamber 8

Operating the cleaner.....9

How to Plug in and use.....9

Adjusting the Suction level (Depending on model).....9

Park System 9

Cleaning the Motor Filter 10

Cleaning the Exhaust Filter 11

Information for Your Safety

Please read all the following information, which contains important instructions for the safety, the use and the maintenance of the appliance.
This appliance complies with the following EC Directives: -73/23/EEC, 93/68/EEC-Low Voltage Directive-89/336EEC -EMC Directive.

- ❑ Never allow children to use the appliance unsupervised.
- ❑ Do not use the appliance If the power cord is damaged or faulty.
- ❑ If the power cord is damaged, it must be replaced by an approved LG Electronics Service Agent to avoid a hazard.
- ❑ Always switch the vacuum cleaner off before:
  - Emptying the dust chamber.
  - Cleaning or changing the filters.
- ❑ Do not vacuum flammable or explosive substances(liquids or gases).
- ❑ Do not vacuum hot ash, embers etc. nor sharp objects.
- ❑ Do not vacuum water or other liquids.
- ❑ Do not unplug by pulling on cord.
- ❑ Use only LG's recommended filters.
- ❑ When you vacuum with an attachment appliance that has a rotating brush roller:
  - Do not reach into the running brush roller.

Thermal protector: This vacuum cleaner has a special thermostat that protects the cleaner in case of motor overheating. If the cleaner suddenly shuts off, turn off the switch and unplug the cleaner. Check the cleaner for a possible source of overheating such as a full dust chamber, a blocked hose or clogged filter. If these conditions are found, fix them and wait at least 30 minutes before attempting to use the cleaner. After the 30 minutes period, plug the cleaner back in and turn on the switch. If the cleaner still does not run, contact a qualified electrician.

Important for users in the UK.
The wires in the mains lead of this appliance are coloured in accordance with the following code:

BLUE-neutral **BROWN - live**

VERY IMPORTANT:
Do not earth the appliance If a 13 amp plug is fitted, fit a 13 amp **BS 1362 fuse**.
If any other type of plug is used, protect with a 15 amp fuse at the distribution board.
For appliances which come with mains lead and plug moulded on: the plug moulded on to the cable incorporates a fuse.
For replacement use a 13 amp BS 1362 fuse.
Only ASTA approved or certified fuses should be used.
The plug must not be used if the fuse cover/carrier is lost.
A replacement cover carrier must be obtained from authorised electrical goods retailers.

C K

3828FI3833H

How to Use Assembling Cleaner

Fit the large cleaning head into the end of the tube.

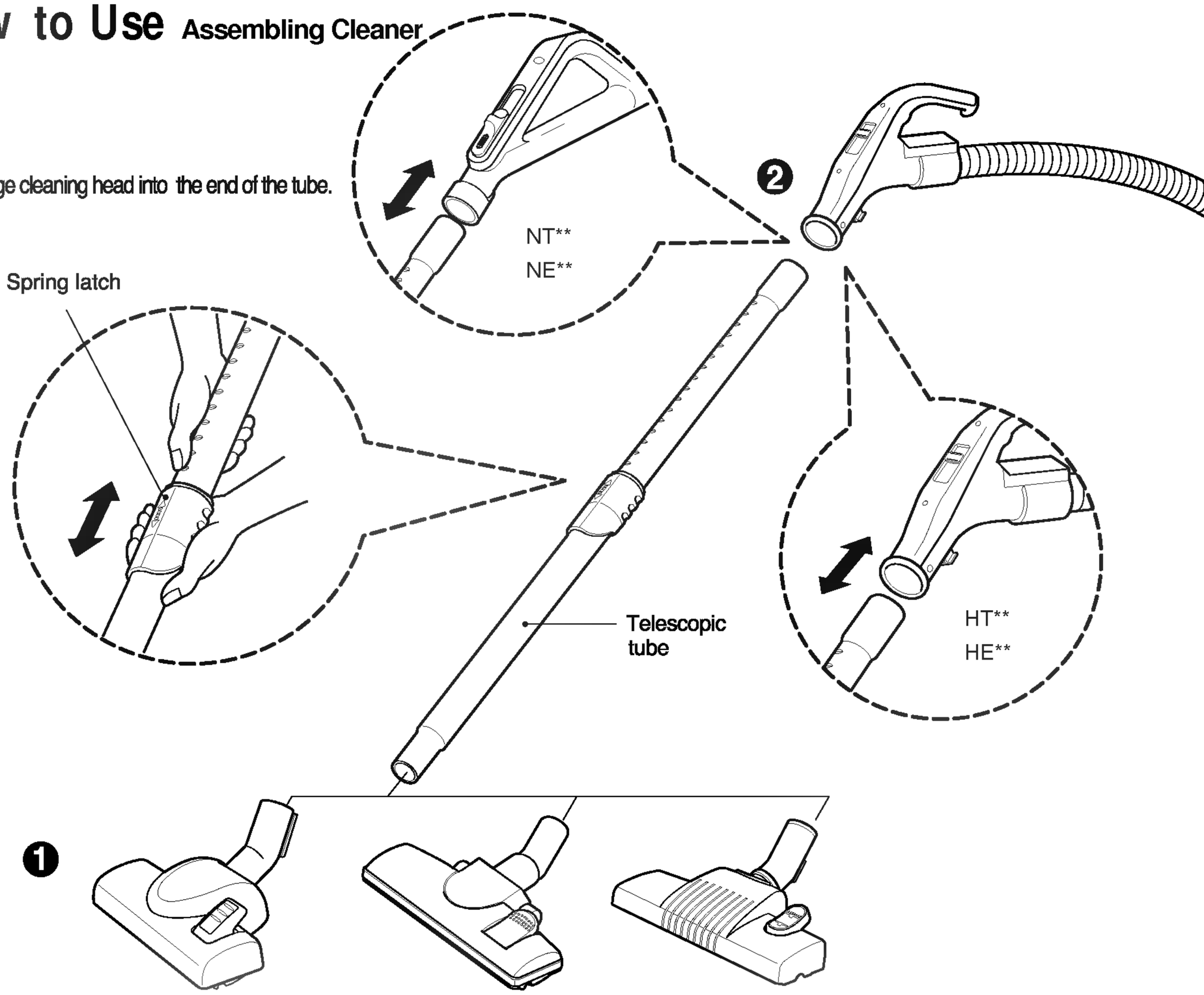

Push telescopic tube into nozzle outlet.

- Press the spring latch to release.
- Pull out the tube to the desired length.
- Release spring latch to lock the tube in position.
- Push telescopic tube into hose handle firmly.

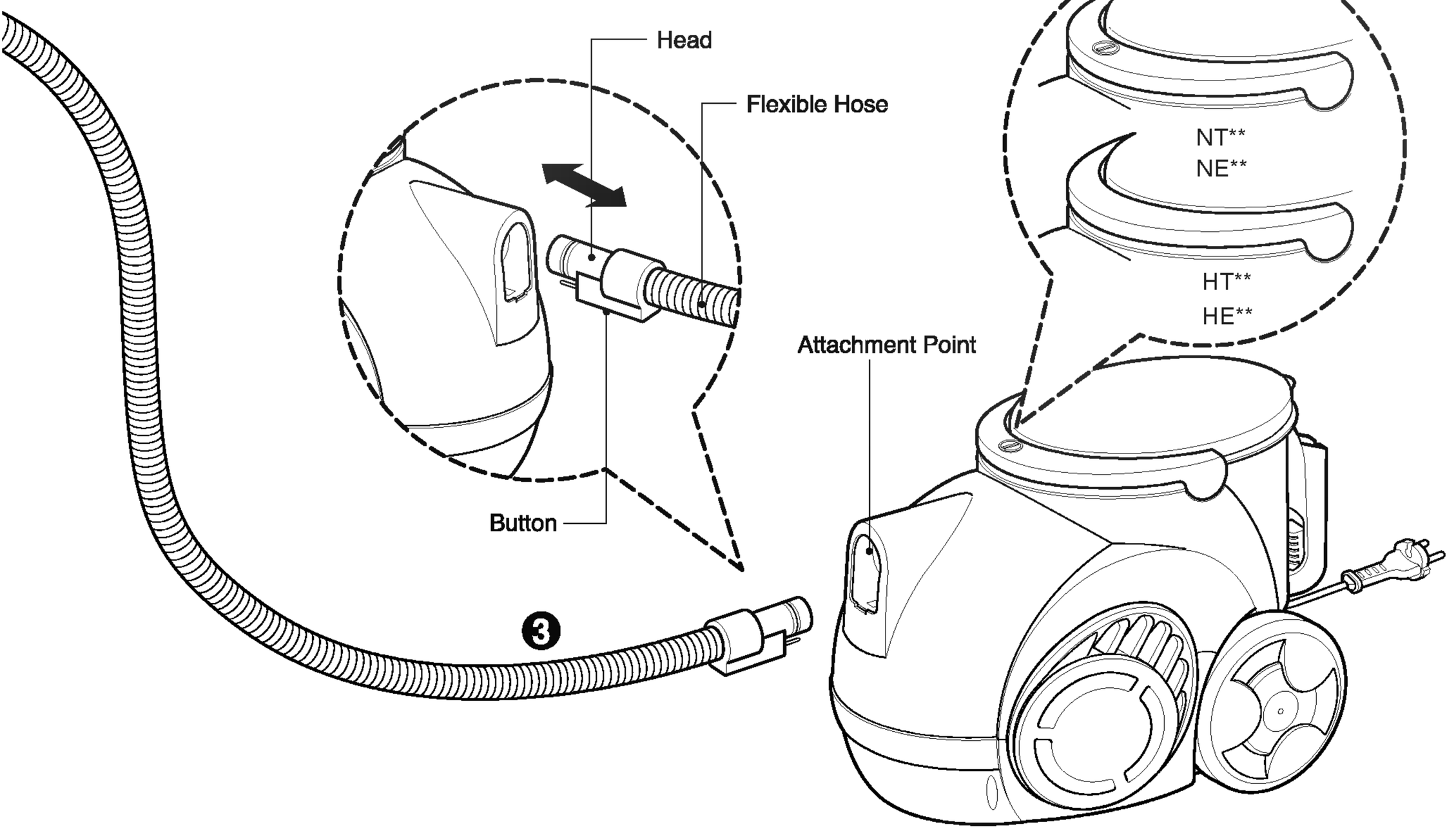

- Push the end of the head on the flexible hose into the attachment point on the vacuum cleaner.
- To remove the flexible hose from the vacuum cleaner, press on the button situated on the head, then pull the head out of the vacuum cleaner.

⚠ CAUTION

- Suction power may be weakened when insignificant dusts are sucked. In this case, clean the filter.
- Make the dust box empty if dusts are filled to the maximum degree and then clean the filter when it becomes 5 times.

How to Use **Using the cleaning head and Accessory Nozzles**

Tear the vinyl bag and pull out accessories. Attach the accessory holder onto the telescopic tube.
And then, fit the Dusting Brush, Crevice Tool and Upholstery Nozzle onto the accessory holder. Fit the accessory onto the end of the tube.

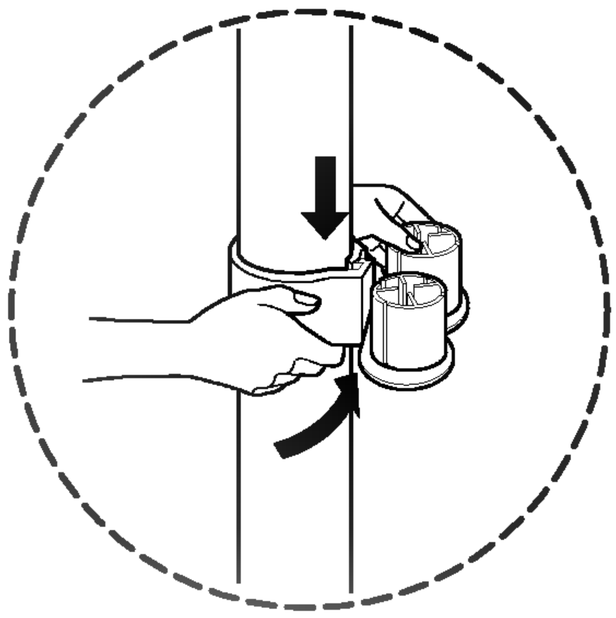

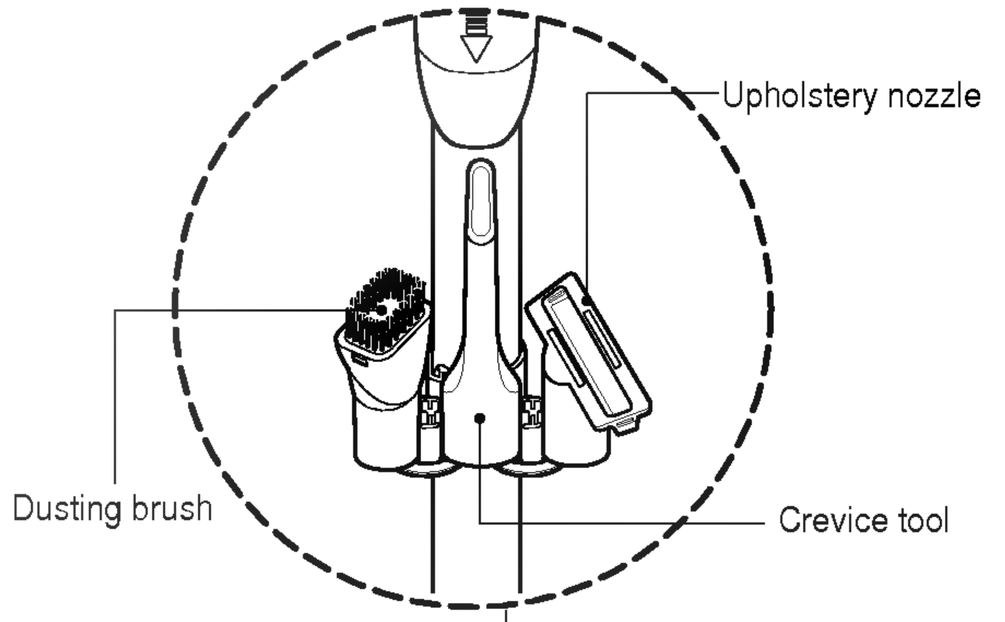





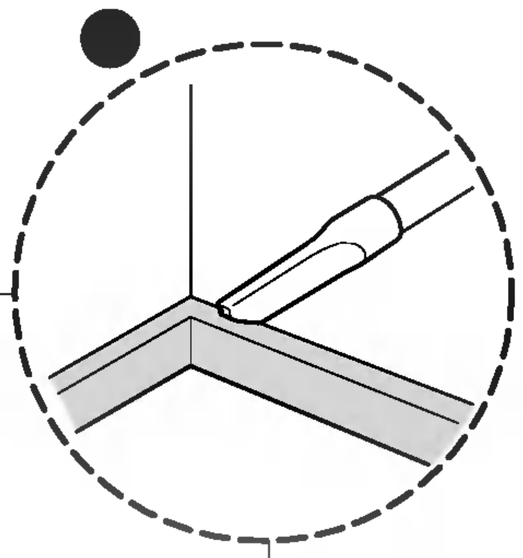

Upholstery Nozzle is for vacuuming upholstery, mattresses, etc.
The thread collectors help to pick up the threads and fluff.

Dusting Brush is for vacuuming picture frames, furniture frames, books and other irregular surfaces.

Crevice Tool is for vacuuming in those normally hard-to-reach places such as reaching cobwebs, or between the cushions of a sofa.

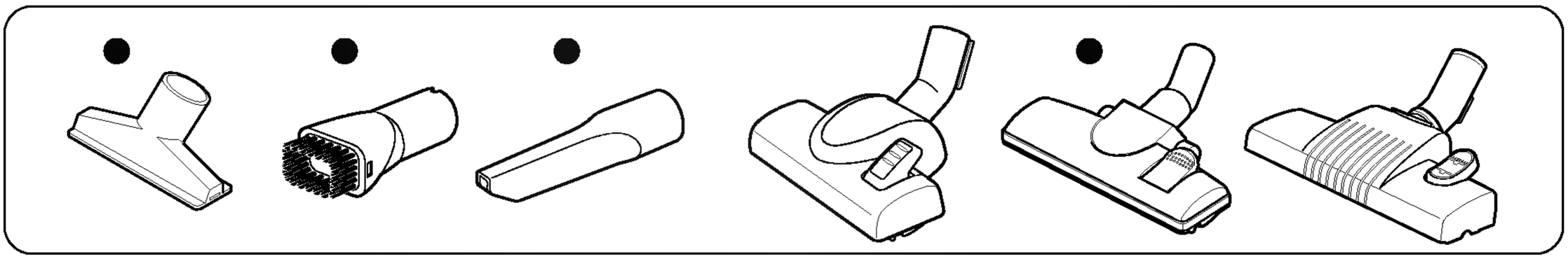

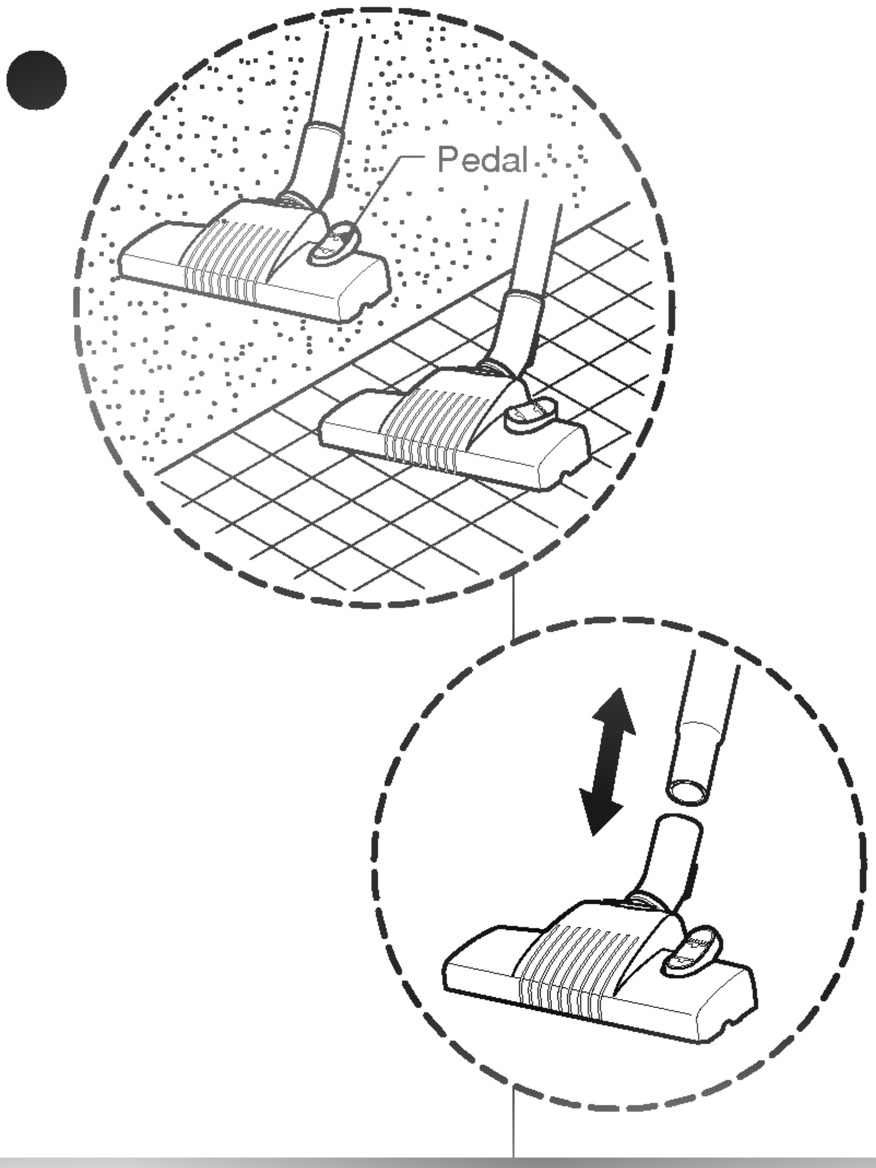

- **The 2 position cleaning head** equipped with a pedal which allows you to alter its position according to the type of floor to be cleaned.
- **Hard floor position (tiles, parquets floor)**
  Press the pedal to lower brush.
- **Carpet or rug position**
  Press the pedal to lift the brush up.

How to Use Emptying the dust chamber

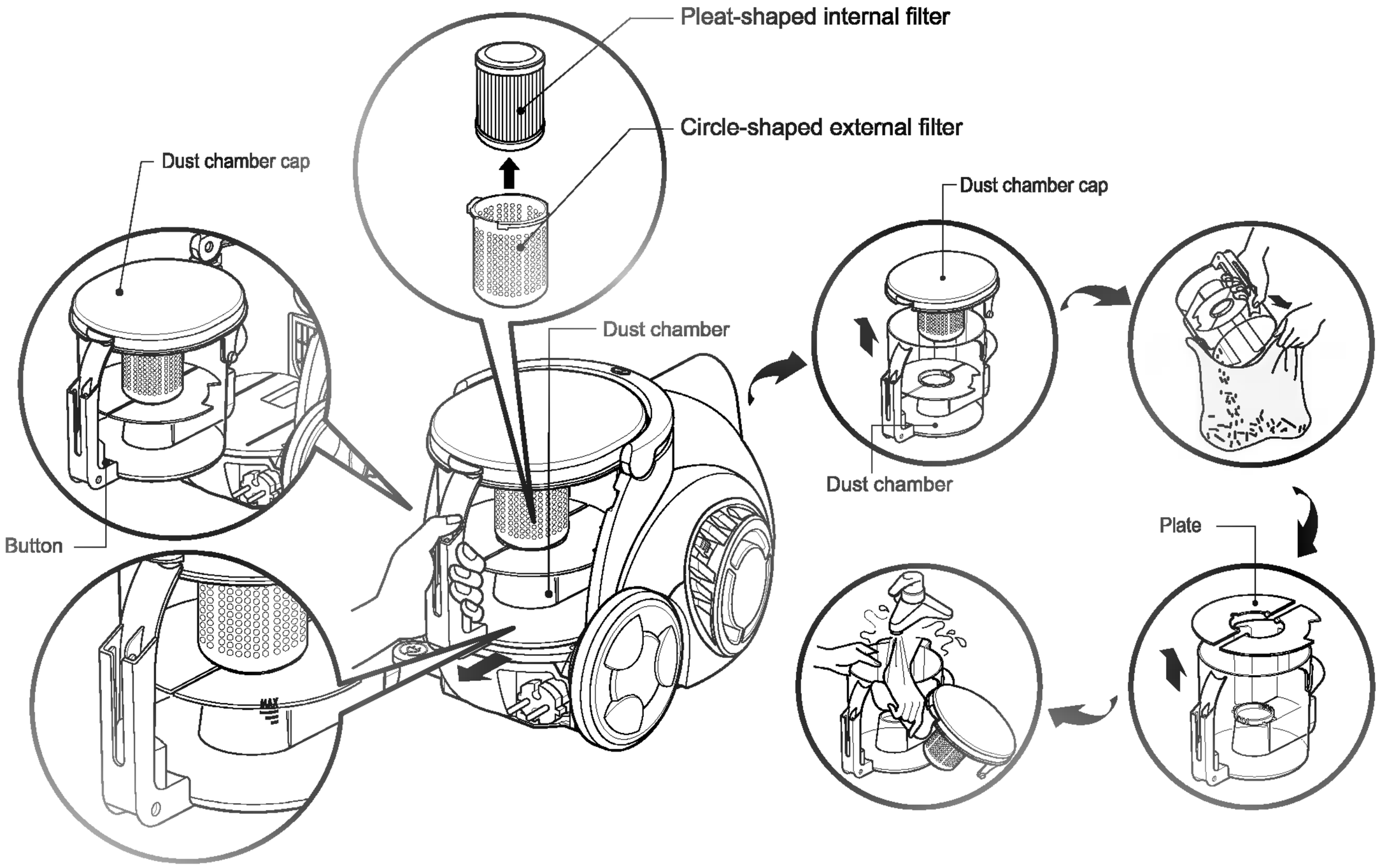

Suction power may be weakened when insignificant dusts are sucked. In this case, clean the filter.

- Turn off the vacuum cleaner and unplug it.
- Your vacuum cleaner is equipped with both a dust chamber and a motor filters.
  Press the button and pull the dust chamber forward.
  Remove the dust chamber cap.
  Clean the pleat-shaped and the clrcle-shaped filters.
- To reinstall the dust chamber, replace the dust chamber cap and push the dust chamber into the tank mount as far as it will go.
- Open the dust chamber cap.
- Remove two plates from the dust chamber.
- Wash both parts with softcloth. Gently rinse both parts under cold running water.

How to Use Operating the cleaner.

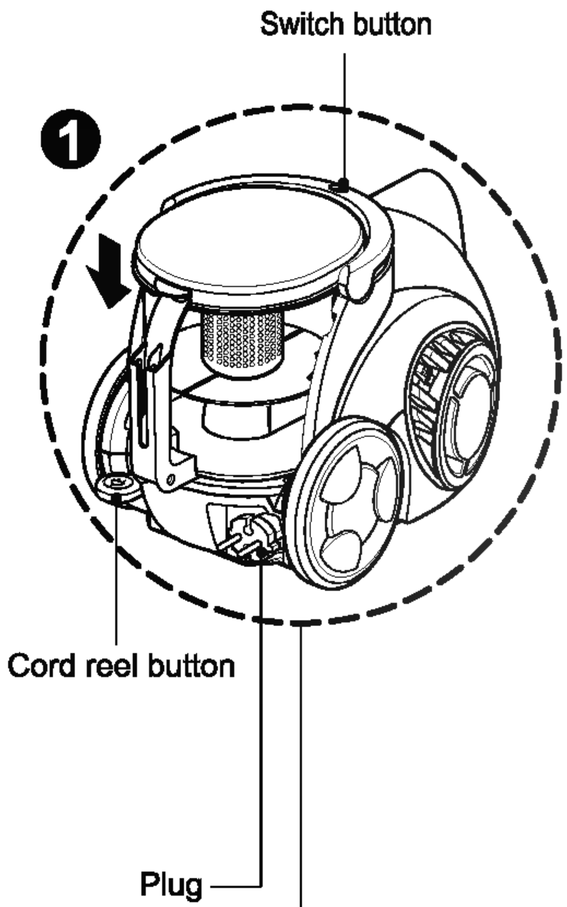

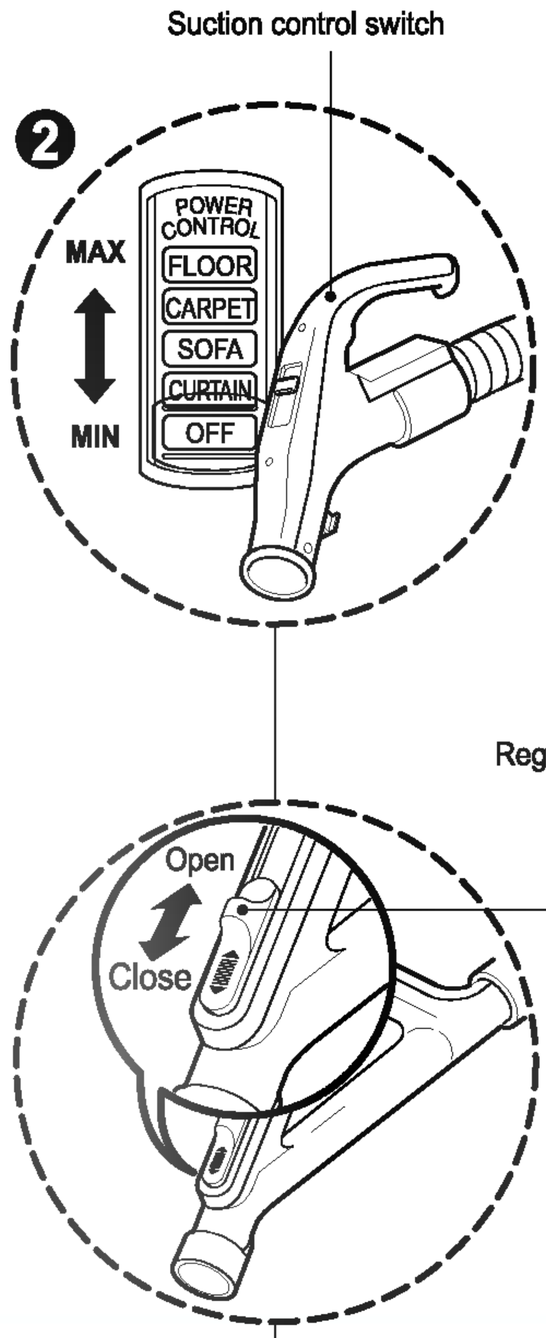

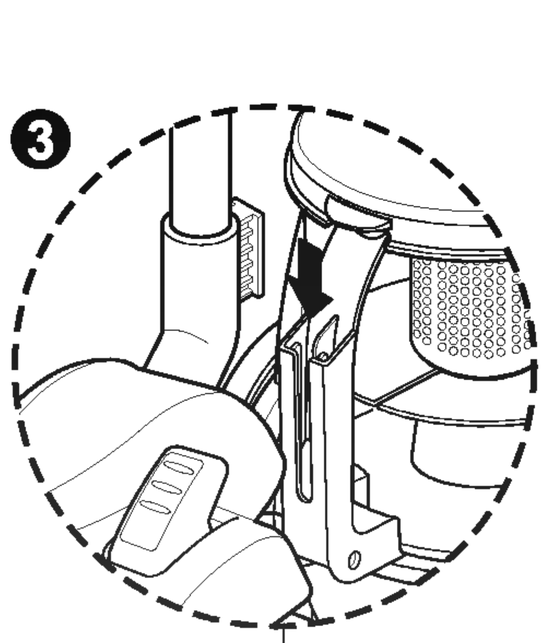

❶ How to Plug in and Use

- Pull out the power cord to the desired length and plug into the socket.
- Push the suction control switch of the hose handle in the direction of the position what you want. (depending on model)
- To stop it, push down the suction control switch in the direction of OFF. (depending on model)
- Press switch button to start the vacuum cleaner. (depending on model)
- To stop it, press the switch button again. (depending on model)
- Press the cord reel button to retract the power cord after use.

❷ Adjusting the Suction level(depending on model)

- Adjust suction with the suction control switch in the hose handle. (depending on model)
- The flexible hose handle has a manual air flow regulator which allows you to adjust the suction level briefly. (depending on model)

❸ Park System

- To store after vacuuming and pause while vacuuming.
- For deposit after vacuuming, for example to move a small piece of furniture or a rug, use the Park system to support the flexible hose and cleaning head.
  - Slide the hook on the large cleaning head into the slot on the rear of the dust chamber.

How to Use Cleaning the Motor Fiter

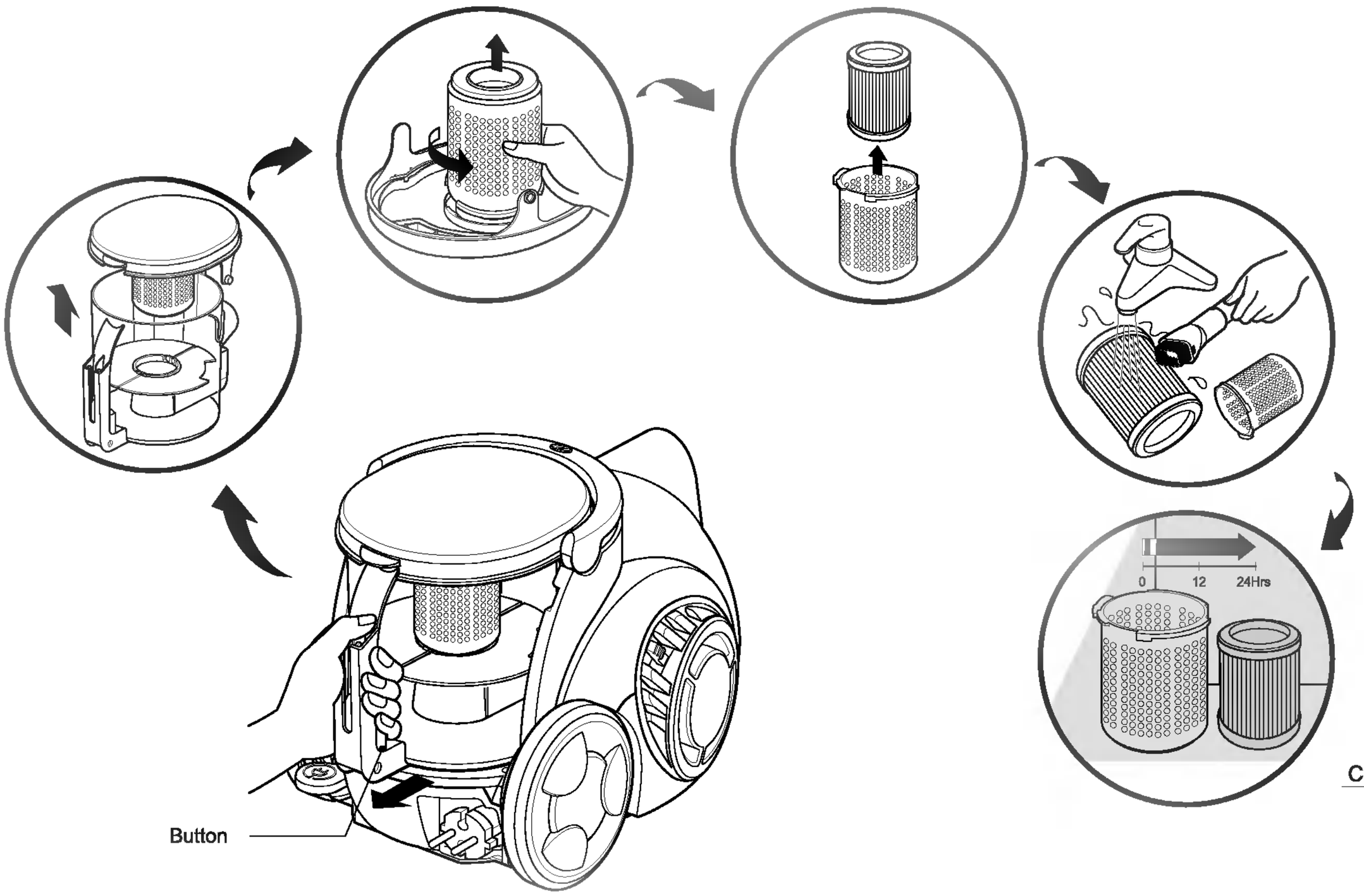

The reusable filters are situated under the dust chamber cap and you can use it permanently.

- Press the button and pull the dust chamber forward.
- Open the dust chamber cap.
- Remove the filters by rotating it counter-clockwise.
- **Clean the filters with the dusting brush under cold running water.**
- **Allow the filters to dry in a shaded location for a day.**
- Make the dust chamber empty if dusts are filled to the maximum degree and then clean the filter.

⚠ WARNING!

Gently rinse both parts separately under a cold running water until the water runs clear. **Do not use detergent or a washing machine or dishwasher.**
Shake off excess water from the filter.
Do not tumble/spindry, microwave or place in oven or on direct heat.
Ensure the filter is completely dry.
Re-assemble and place it back in your machine, filter frame.
If the filter is damaged, do not place them in the machine.
Please call the Helpline.
Do not use the net-shaped filter seperately.

How to Use Cleaning the Exhaust Filter

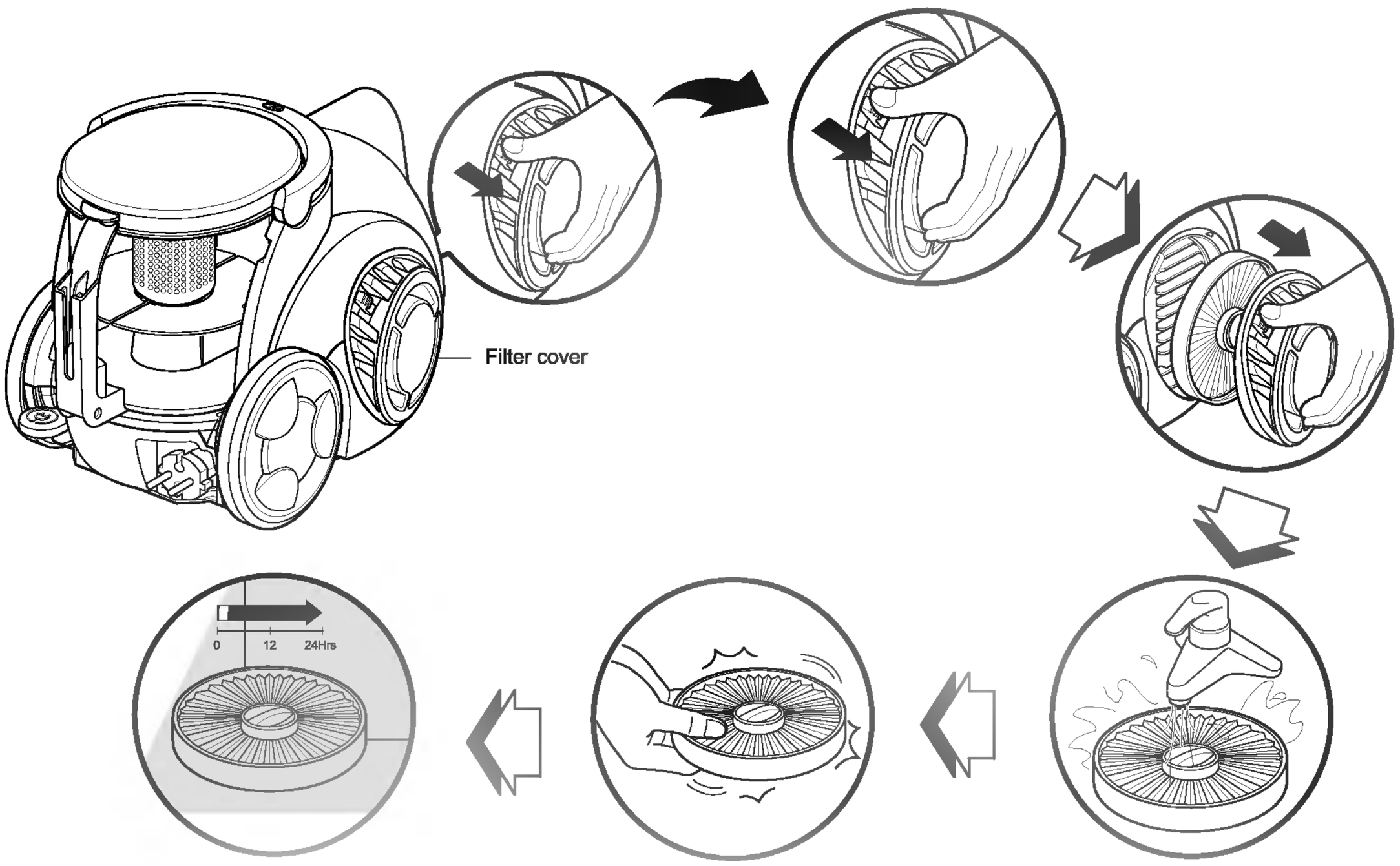

- The exhaust filter is a washable and reusable HEPA filter.
- To change the exhaust filter, remove the filter cover on the body by release hook.
- Pull out the exhaust filter.
- Clean it with cold, running water.
  Do Not use the brush
  - Using the brush will cause permanent damage and allow dust to bypass the filter.
- Allow exhaust filter to dry in a shaded location for a dry.
- The exhaust filter should be cleaned at least once a year.

What to Do if Your Vacuum Cleaner Does Not Work

Check that the vacuum cleaner is correctly plugged in correctly and that the electrical socket is working.

What to Do When Suction Performance Decreases

- Turn off the vacuum cleaner and unplug it.
- Check the telecsopic tube, flexible hose and cleaning tool for blockages or obstructions.
- Check that the dust chamber is not full. Empty if necessary.
- Check that the motor filter light is not on. Clean the motor filter, if necessary.
- Check that the exhaust filter is not blocked. Clean the exhaust filter, if necessary.

WARNING!

Should it become necessary to replace the moulded plug then the detective plug should have the fuse removed and replaced of safely.

Notes

Notes

3828FI3833H

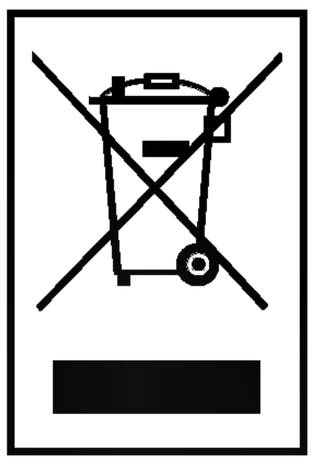

Disposal of your old appliance

1. When this crossed-out wheeled bin symbol is attached to a product it means the product is covered by the European Directive 2002/96/EC.
2. All electrical and electronic products should be disposed of separately from the municipal waste stream via designated collection facilities appointed by the government or the local authorities.
3. The correct disposal of your old appliance will help prevent potential negative consequences for the environment and human health.
4. For more detailed information about disposal of your old appliance, please contact your city office, waste disposal service or the shop where you purchased the product.

LG Electronics Inc.

P/No.: 3828FI3833H