DVD
Recorder Receiver System
OWNER'S MANUAL

MODEL:LH-R5500SB
(Main Unit: LH-R5500W
Speakers: LHS-55SBS, LHS-55SBC, LHS-55SBW)

Before connecting, operating or adjusting this product, please read this instruction booklet carefully and completely.

Safety Precautions



CAUTION: TO REDUCE THE RISK
OF ELECTRIC SHOCK
DO NOT REMOVE COVER (OR BACK)
NO USER-SERVICEABLE PARTS INSIDE
REFER SERVICING TO QUALIFIED SERVICE
PERSONNEL.



This lightning flash with arrowhead symbol within an equilateral triangle is intended to alert the user to the presence of uninsulated dangerous voltage within the product's enclosure that may be of sufficient magnitude to constitute a risk of electric shock to persons.



The exclamation point within an equilateral triangle is intended to alert the user to the presence of important operating and maintenance (servicing) instructions in the literature accompanying the product.

WARNING: TO PREVENT FIRE OR ELECTRIC SHOCK HAZARD, DO NOT EXPOSE THIS PRODUCT TO RAIN OR MOISTURE.

WARNING: Do not install this equipment in a confined space such as a bookcase or similar unit.

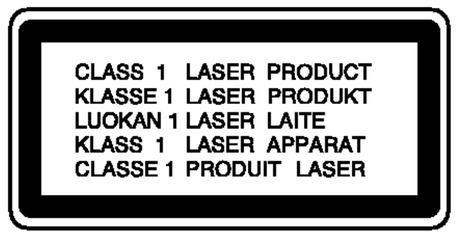

CAUTION:
This product employs a Laser System.
To ensure proper use of this product, please read this owner's manual carefully and retain it for future reference. Should the unit require maintenance, contact an authorized service center.
Performing controls, adjustments, or carrying out procedures other than those specified herein may result in hazardous radiation exposure.
To prevent direct exposure to laser beam, do not try to open the enclosure. Visible laser radiation when open. DO NOT STARE INTO BEAM.

CAUTION:
CLASS 2M VISIBLE AND INVISIBLE LASER RADIATION WHEN OPEN AND INTERLOCKS DEFEATED DO NOT STARE INTO THE BEAM OR VIEW DIRECTLY WITH OPTICAL INSTRUMENTS.

CAUTION concerning the Power Cord

Most appliances recommend they be placed upon a dedicated circuit;
That is, a single outlet circuit which powers only that appliance and has no additional outlets or branch circuits. Check the specification page of this owner's manual to be certain.

Do not overload wall outlets. Overloaded wall outlets, loose or damaged wall outlets, extension cords, frayed power cords, or damaged or cracked wire insulation are dangerous. Any of these conditions could result in electric shock or fire.
Periodically examine the cord of your appliance, and if its appearance indicates damage or deterioration, unplug it, discontinue use of the appliance, and have the cord replaced with an exact replacement part by an authorized servicer.

Protect the power cord from physical or mechanical abuse, such as being twisted, kinked, pinched, closed in a door, or walked upon. Pay particular attention to plugs, wall outlets, and the point where the cord exits the appliance.

The appliance is not intended for use by young children or infirm persons without supervision.

Young Children should be supervised to ensure that they do not play with appliance.

If the appliance is supplied from a cord extension set or electrical portable outlet device, the cord extention set on electrical portable outlet device must be positioned so that it is not subject to splashing or ingress of moisture.

SERIAL NUMBER:
You can find the serial number on the back of the unit. This number is unique to this unit and not available to others. You should record requested information here and retain this guide as a permanent record of your purchase.

Model No. _____

Serial No. _____

Manufactured under license from Dolby Laboratories. "Dolby", "Pro Logic" and the double-D symbol are trademarks of Dolby Laboratories.

DTS and DTS Digital Out are registered trademarks of Digital Theater Systems, Inc.

G-CODE®
G-CODE is a registered trademark of Gemstar Development Corporation.
The G-CODE System is manufactured under license from Gemstar Development Corporation.

Table of Contents

INTRODUCTION

Safety Precautions. 2
Table of Contents. 3
DVD Recorder Receiver Overview 4-10
Recordable and Playable Discs 4
Playable Discs 5
Remote Control Operation 5
Disc-related terms 6
About Symbols 6
About recordable discs 7
About DVD recording. 8-9
Precautions 10
Notes on Discs 10
Front Panel. 11
Remote Control Overview 12

HOOKUP

Connections 13-21
Rear Panel Connections 13
Connecting to the Aerial 13
Connections to Your TV 14
Accessory Audio/Video (A/V) Connections to DVD Recorder Receiver 15
Connecting a Digital Camcorder 15
Radio Aerial Connections 16
Speaker System Connections. 17
Speaker Positioning 18
Mini Glossary for Sound Mode 19
Delay Time Setting. 20-21
Sound Level 21
Test Tone 21
XTS (Excellent True Sound) 21
XTS pro 21

SETUP

Pre-operation Setup 22-32
Initial Settings 22
General 22-28
• Auto Programming. 22
• Program Edit 23-24
• Manual Clock Set 25
• TV Aspect Ratio 25
• Display Mode 25
• Progressive Scan 25
• PBC 26
• Factory Set 26
Language 26
• Display Language 26
• Disc Language 26
Audio 26
• Dolby Digital 26
• DRC (Dynamic Range Control) 26
Lock (Parental Control) 27-28
• Set Password 27
• Rating 27
• Area Code. 28
• DivX(R) VOD. 28
Recording. 29
• Record Mode Set 29
• Record Aspect Ratio 29
• DV Record Audio. 29
• Auto Chapter. 29
Disc. 30-31
• Initialize. 30
• Disc Protect. 30
• Finalize 31
• Disc Label 31
Overview for the On-Screen Display 32

PLAYBACK

DVD and Video CD Operation. 33-36
Playing a DivX Movie Disc. 37
Audio CD and MP3/WMA Operation 38-40
Playing an Audio CD or MP3/WMA file 38-39
Programmed Playback 40
JPEG File Operation 41-42

RECORDING

Basic Recording. 43
Basic Recording from TV channels 43
Instant Timer Recording 43
Timer Recording 44-45
Recording from an External Input Source . 46-47
Recording from External Components. 46
Recording from a Digital Camcorder 46
What is DV? 47

EDITING

Title List and Chapter List Menu Overview . . . 48
Title and Chapter Editing 49-54
Titles, Chapters, and Parts 49
Adding Chapter Markers 49
Changing Title Thumbnails 49
Making a New Playlist. 50
Adding Additional Title/Chapters to the Playlist 50
Deleting a Title/Chapter 51
Deleting a Part 51
Naming a Title 52
Combining Two Chapters Into One 52
Moving a Playlist Chapter 53
Protect a Title 53
Hide a Chapter 54
Dividing One Title Into Two 54

REFERENCE

Additional Information. 55
Overwriting Recording 55
Viewing Title List menu displayed on other DVD Recorders or Players. 55
Playing Your Recordings on Other DVD Players (Finalizing a Disc) 55
Radio Operation. 56
Language Code and Area Code List 57
Troubleshooting 58-59
Specifications 60-61

Recordable and Playable Discs

DVD-RW (Digital Video Disc - ReWritable):
- DVD-RW discs can be formatted for VR mode recording or Video mode recording.
- These Discs can be recorded on repeatedly. Recordings can be erased, then you can record again on the same Disc.

[VR mode]
- Recordings can be extensively edited
- Playable only on VR mode compatible players (after finalization)

[Video mode]
- Playable on regular DVD players (after finalization)
- Limited editing features

DVD-R (Digital Video Disc - Recordable)
- These Discs can be recorded only once. After you finalize a DVD-R, you cannot record on it or edit it.
- DVD-R discs can be only formatted to Video mode.
- Playable on regular DVD players (after finalization)
- Limited editing features

DVD+RW (Digital Video Disc + ReWritable)
- These Discs can be recorded on repeatedly. Recordings can be erased, then you can record again on the same Disc.
- Playable on DVD+RW compatible players (automatically finalization)
- The edited contents are playable on DVD+RW compatible players only after finalization
- Recordings can be edited the title/chapter

DVD+R (Digital Video Disc + Recordable)
- These Discs can be recorded only once. After you finalize a DVD+R, you cannot record on it or edit it any more.
- Playable on DVD+R compatible players (after finalization)
- Any edited contents are not be compatible on DVD+R compatible players. (Hide, chapter combine, added chapter mark, etc.)
- Limited title/chapter editing features.

The recommendable recordable DVD discs

DVD-R	DVD+R	DVD-RW	DVD+RW
SONY (8x, 16x)	SONY (2.4x, 4x, 8x, 16x)	Victor (1x, 4x)	SONY (2.4x)
TDK (4x, 8x)	TDK (4x)	Maxell (1x, 2x, 4x)	TDK (2.4x)
Verbatim (4x, 8x)	Mitsubishi (4x, 8x)	TDK (2x)	Philips (4x)
Panasonic (2x, 4x)	Ricoh (2x, 4x, 8x)	Mitsubishi (2x)	Ricoh (2.4x)
-	-	-	HP (2.4x, 4x)

Note:

If a DVD-RW/DVD+RW discs is recorded using a personal computer or other recorder, you cannot format the disc using this recorder. So if you want to use the disc on this DVD Recorder Receiver, you must format the disc using the original recorder.

DVD Recorder Receiver Overview

Playable Discs

DVD (8 cm / 12 cm disc)
- Discs such as movies that can be purchased or rented

Video CD (VCD) (8 cm / 12 cm disc)
- VIDEO CDs or CD-Rs/CD-RWs in VIDEO CD/Super VIDEO CD format

Audio CD (8 cm / 12 cm disc)
- Music CDs or CD-Rs/CD-RWs in music CD format that can be purchased

CD-R/CD-RW (8 cm / 12 cm disc)
- CD-R/CD-RW discs that contain audio titles, DivX, MP3, WMA, or JPEG files.

Notes:
– Depending on the conditions of the recording equipment or the CD-R/RW (or DVD±R/RW) disc itself, some CD-R/RW (or DVD±R/RW) discs cannot be played on the unit.
– Do not attach any seal or label to either side (the labeled side or the recorded side) of a disc.
– Do not use irregularly shaped CDs (e.g., heart-shaped or octagonal). Doing so may result in malfunctions.
– Depending on the recording software & the finalization, some recorded discs (CD-R/RW or DVD±R/RW) may not be playable.
– DVD-R/RW, DVD+R/RW and CD-R/RW discs recorded using a personal computer or a DVD or CD Recorder may not play if the disc is damaged or dirty, or if there is dirt or condensation on the Recorder's lens.
– If you record a disc using a personal computer, even if it is recorded in a compatible format, there are cases in which it may not play because of the settings of the application software used to create the disc. (Check with the software publisher for more detailed information.)

Regional code of the recorder and DVDs

This recorder is designed and manufactured for playback of Region 4 encoded DVD software. The region code on the labels of some DVD discs indicates which type of the recorder can play those discs. This unit can play only DVD discs labeled 4 or ALL. If you try to play any other discs, the message "Incorrect region code. Can't play back" will appear on the TV screen. Some DVD discs may not have a region code label even though their playback is prohibited by area limits.

Notes on DVDs and Video CDs

Some playback operations of DVDs and Video CDs may be intentionally fixed by software manufacturers. As this unit plays DVDs and Video CDs according to disc content designed by the software manufacturer, some playback features of the unit may not be available or other functions may be added.
Refer also to the instructions supplied with the DVDs and Video CDs. Some DVDs made for business purposes may not be played on the unit.

Remote Control Operation

Point the Remote Control at the remote sensor and press the buttons.

Remote Control Battery Installation

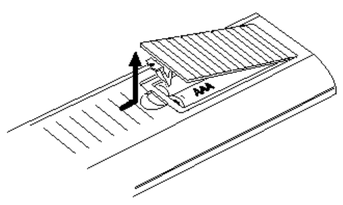

Remove the battery cover on the rear of the Remote Control, and insert two R03 (size AAA) batteries with ⊕ and ⊖ matched correctly.

⚠Caution
Do not mix old and new batteries. Never mix different types of batteries (standard, alkaline, etc.).

Disc-related terms

DVD ±R / DVD ±RW
DVD -R and DVD +R are two different standards for recordable DVD drives and discs. This format allows information to be recorded onto the DVD disc only once. DVD +RW and DVD -RW are two standards for re-writable media, meaning the DVD content can be erased and re-recorded. Single-sided discs can hold 4.38 Gigabytes and double-sided discs hold twice as much.

Title (DVD only)
The main film content, accompanying feature content, or music album.
Each title is assigned a title reference number enabling you to locate it easily.

Chapter (DVD only)
Sections of a picture or a musical piece that are smaller than titles. A title is composed of one or several chapters. Each chapter is assigned a chapter number to enable you to locate the chapter you want. Depending on the disc, chapters may not be labeled.

Track (Video CD and Audio CD only)
Sections of a picture or a musical piece on a Video CD or an Audio CD. Each track is assigned a track number, enabling you to locate the track you want.

Scene
On a Video CD with PBC (Playback control) functions, moving pictures and still pictures are divided into sections called “Scenes”. Each scene available is displayed on the Scene menu and assigned a scene number, enabling you to locate the scene you want.
A scene may be composed of one or several tracks.

DivX
DivX is the name of a revolutionary new video codec which is based on the new MPEG-4 compression standard for video.You will be able to play DivX movies using this DVD player.

Types of Video CDs

There are two types of Video CDs:

Video CDs equipped with PBC (Version 2.0)
PBC (Playback control) functions allow you to interact with the system via menus, search functions, or other typical computer-like operations. Moreover, high resolution still pictures can be played if they are included on the disc.

Video CDs not equipped with PBC (Version 1.1)
Operated in the same way as audio CDs, these discs allow playback of video pictures as well as sound, but they are not equipped with PBC.

About Symbols

About the ⃠ symbol display

“ ⃠ “ may appear on the TV screen during operation. This icon means the function explained in this owner’s manual is not available on that specific disc, or at that time.

About the disc symbols for instructions

A section whose title has one of the following symbols are applicable only to those discs represented by the symbol.

Many functions provided on this Recorder are dependent on the recording mode. One or more of the symbols ([redacted], [redacted], [redacted], [redacted]) appear by each function (explained in this manual) so that you can see at a glance whether it’s applicable to the disc loaded.

- [redacted] DVD-R/RW with Video recording mode
- [redacted] DVD-RW with VR recording mode
- [redacted] DVD+R disc
- [redacted] DVD+RW disc
- [redacted] DVD-Video disc
- [redacted] Video CDs
- [redacted] Audio CDs
- [redacted] DivX files
- [redacted] MP3 files
- [redacted] WMA files
- [redacted] JPEG files

The finalized DVD disc is a DVD-Video disc.

About recordable discs

How are recordable discs different?
The essential difference among DVD-R, DVD-RW, DVD+R and DVD+RW is that DVD-R and DVD+R are record-once medium, while DVD-RW and DVD+RW are re-recordable/erasable medium. You can re-record/ erase a DVD-RW and DVD+RW disc approximately 1,000 times.

Can I play my recordable discs in a regular DVD player?
Generally, DVD-R, DVD+R and DVD-RW discs recorded in Video mode are playable in a regular DVD player, but they must be 'finalized' first. This process fixes the contents of the disc to make them readable to other DVD players as DVD-Video discs.
DVD-RW discs recorded in VR (Video Recording) mode are playable in some players.
Unfinalized DVD+RW discs are playable in a regular DVD player.

RW COMPATIBLE This indicates a product feature that is capable of playing DVD-RW discs recorded with Video Recording format.

What are 'recording modes'?

There are various recording modes available using this Recorder. When recording to a DVD-R, DVD+R or DVD+RW disc, recordings are always in Video mode. DVD-RW discs can be formatted for VR mode recording or Video mode recording.

VR mode recording
- 4 different picture quality/recording time settings available (HQ, SQ, LQ, EQ)
- Not playable on regular DVD players
- Recordings can be extensively edited

Video mode recording
- 4 different picture quality/recording time settings available (HQ, SQ, LQ, EQ)
- Playable on regular DVD players (after finalization)
- Limited editing features

DVD+RW mode recording
- 4 different picture quality/recording time settings available (HQ, SQ, LQ, EQ)
- Playable on regular DVD players
- The edited contents is playable on regular DVD players only after finalizing
- Recordings can be edited the title/chapter

DVD+R mode recording
- 4 different picture quality/recording time settings available (HQ, SQ, LQ, EQ)
- Playable on regular DVD players (after finalization)
- Any edited contents are not be compatible on regular DVD players. (Hide, chapter combine, added chapter mark, etc.)
- Limited title/chapter editing features.

Note :
DVD-Video Format (Video mode) is a new format for recording on DVD-R/RW and DVD+R/RW discs that was approved by the DVD Forum in 2000. You may therefore experience problems playing recordable DVD discs in some players. Symptoms include video artifacts, audio and/or video dropouts and playback suddenly stopping.
Our company cannot take responsibility for problems playing discs recorded on this Recorder in other players.

Is editing a DVD like editing a video tape?

No. When you edit a video tape you need one video deck to play the original tape and another to record the edits. With DVD, you edit by making a 'Playlist' of what to play and when to play it. On playback, the Recorder plays the disc according to the Playlist.

About word 'Original' and 'Playlist'

Throughout this manual, you will often see the words Original and Playlist to refer to the actual content and the edited version.
- **Original:** content refers to what's actually recorded on the disc.
- **Playlist:** content refers to the edited version of the disc — how the Original content is to be played.

Disc type	Disc format	Recording mode	Functions
DVD-Video	Video format	n/a	Playback only
DVD-RW	Video Recording format (default)	VR mode	Playback, Recording, Original/Playlist Editing
	Video format	Video mode	Playback, limited Recording, limited Editing
DVD-R	Video format	Video mode	Playback, limited Recording, limited Editing
DVD+RW	+RW Video format	DVD+RW	Playback, limited Recording, Title/Chapter Editing
DVD+R	+R Video format	DVD+R	Playback, limited Recording, limited Title/Chapter Editing

About DVD recording

Notes :

- This recorder cannot make recordings on CD-R or CD-RW discs.
- Our company takes no responsibility for recording failure due to power outages, defective discs, or damage to the Recorder.
- Fingerprints and small scratches on a disc can affect playback and/or recording performance. Please take proper care of your discs.

Disc types and recording formats, modes, and settings

This recorder can play five different kinds of DVD discs: pre-recorded DVD-Video discs, DVD-RW, DVD-R, DVD+RW and DVD+R discs. The disc format for DVD-R discs is always "Video format"—the same as pre-recorded DVD-Video discs. This means that once finalized, you can play a DVD-R in a regular DVD player.
By default, the DVD-RW disc format is Video Recording (VR) format, though you can change this to Video format, if required. (Reinitializing the disc will erase the contents of the disc.)
The recording mode is closely related to the disc format. If the disc format is Video Recording format, then the recording mode is VR mode; if the disc format is Video mode, then the recording mode is Video mode (except for DVD-Video, which is not recordable, and so does not have a recording mode).
Within the recording modes (which are fixed for them whole disc) are the record settings. These can be changed as required for each recording and determine the picture quality and how much space the recording will take up on the disc.

Notes for recording

- The recording times shown are not exact because the recorder uses variable bit-rate video compression. This means that the exact recording time will depend on the material being recorded.
- When recording a TV broadcast, if the reception is poor or the picture contains interference, the recording times may be shorter.
- If you record still pictures or audio only, the recording time may be longer.
- The displayed times for recording and time remaining may not always add up to exactly the length of the disc.
- The recording time available may decrease if you heavily edit a disc.
- If using a DVD-RW disc, make sure you change the recording format (Video mode or VR mode) before you record anything on the disc. See page 30 (Initialize) for how to do this.
- When using a DVD-R disc, you can keep recording until the disc is full, or until you finalize the disc. Before you start a recording session, check the amount of recording time left on the disc.
- When using a DVD-RW disc in Video mode, recording time available will only increase if you erase the last title recorded on the disc.
- The Erase Title option in the Title List-Original menu only hides the title, it does not actually erase the title from the disc and increase the recording time available (except for the last recorded title on a DVD-RW disc in Video mode).
- Overwrite recording is available using DVD+RW discs.

Restrictions on video recording

- You cannot record copy-protected video using this recorder. Copy-protected video includes DVD-Video discs and some satellite broadcasts. If copy-protected material is encountered during a recording, recording will pause or stop automatically and an error message will be displayed on-screen.
- Video that is 'copy-once only' can only be recorded using a DVD-RW disc in VR mode with CPRM (see below).
- NTSC format signals from the analog or the DV inputs is not recorded correctly with this recorder.
- Video signals in SECAM format (from the built-in TV tuner or from the analog inputs) are recorded in PAL format.

What is 'CPRM'?

CPRM is a copy protection system (with scramble system) only allowing the recording of 'copy once' broadcast programs. CPRM stands for Content Protection for Recordable Media.
This Recorder is CPRM compatible, which means that you can record copy-once broadcast programs, but you cannot then make a copy of those recordings. CPRM recordings can only be made on DVD-RW discs formatted in VR mode, and CPRM recordings can only be played on players that are specifically compatible with CPRM.

Copyright

- Recording equipment should be used only for lawful copying and you are advised to check carefully what is lawful copying in the area in which you are making a copy. Copying of copyright material such as films or music is unlawful unless permitted by a legal exception or consented to by the rights owner.
- This product incorporates copyright protection technology that is protected by method claims of certain U.S. patents and other intellectual property rights owned by Macrovision Corporation and other rights owners. Use of this copyright protection technology must be authorized by Macrovision Corporation, and is intended for home and other limited viewing uses only, unless otherwise authorized by Macrovision corporation. Reverse engineering or disassembly is prohibited.
- CONSUMERS SHOULD NOTE THAT NOT ALL HIGH DEFINITION TELEVISION SETS ARE FULLY COMPATIBLE WITH THIS PRODUCT AND MAY CAUSE ARTIFACTS TO BE DISPLAYED IN THE PICTURE. IN CASE OF 625 PROGRESSIVE SCAN PICTURE PROBLEMS, IT IS RECOMMENDED THAT THE USER SWITCH THE CONNECTION TO THE 'STANDARD DEFINITION' OUTPUT. IF THERE ARE QUESTIONS REGARDING OUR TV SET COMPATIBILITY WITH THIS MODEL 625p DVD Recorder Receiver, PLEASE CONTACT OUR CUSTOMER SERVICE CENTER.

DVD Recorder Receiver Overview (Continued)

Precautions

Handling the unit

When shipping the unit
The original shipping carton and packing materials come in handy. For maximum protection, re-pack the unit as it was originally packaged at the factory.

When setting up the unit
The picture and sound of a nearby TV, VCR, or radio may be distorted during playback. In this case, position the unit away from the TV, VCR, or radio, or turn off the unit after removing the disc.

To keep the surface clean
Do not use volatile liquids, such as insecticide spray, near the unit. Do not leave rubber or plastic products in contact with the unit for a long period of time. They will leave marks on the surface.

Cleaning the unit

To clean the cabinet
Use a soft, dry cloth. If the surfaces are extremely dirty, use a soft cloth lightly moistened with a mild detergent solution. Do not use strong solvents such as alcohol, benzine, or thinner, as these might damage the surface of the unit.

To obtain a clear picture
The DVD Recorder Receiver is a high-tech, precision device. If the optical pick-up lens and disc drive parts are dirty or worn, the picture quality will be poor.
Regular inspection and maintenance are recommended after every 1,000 hours of use. (This depends on the operating environment.)
For details, please contact your nearest dealer.

Notes on Discs

Handling discs

Do not touch the playback side of the disc. Hold the disc by the edges so that fingerprints will not get on the surface. Do not stick paper or tape on the disc.

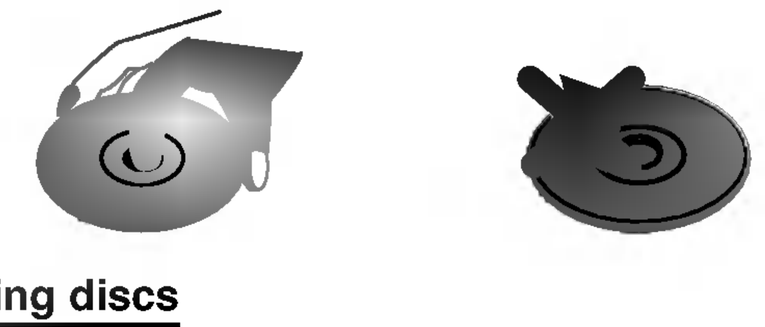

Storing discs

After playing, store the disc in its case.
Do not expose the disc to direct sunlight or sources of heat, or leave it in a parked car exposed to direct sunlight, as there may be a considerable temperature increase inside the car.

Cleaning discs

Fingerprints and dust on the disc can cause poor picture quality and sound distortion. Before playing, clean the disc with a clean cloth. Wipe the disc from the center outward.

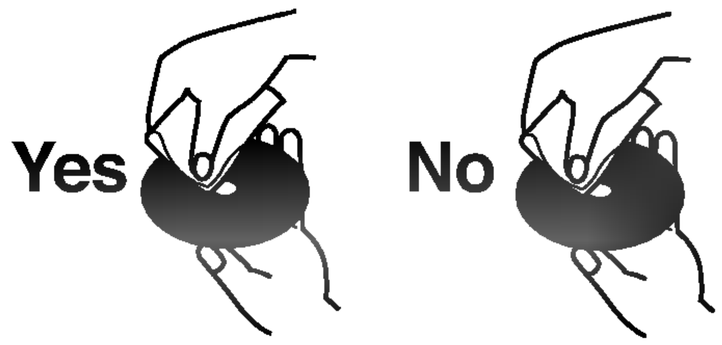

Do not use strong solvents such as alcohol, benzine, thinner, commercially available cleaners, or anti-static spray intended for older vinyl records.

Moisture Condensation

Never operate this product immediately after moving it from a cold location to a warm location. Leave it for two or three hours without operating it. If you use this product in such a situation, it may damage discs/tapes and internal parts.

Front Panel

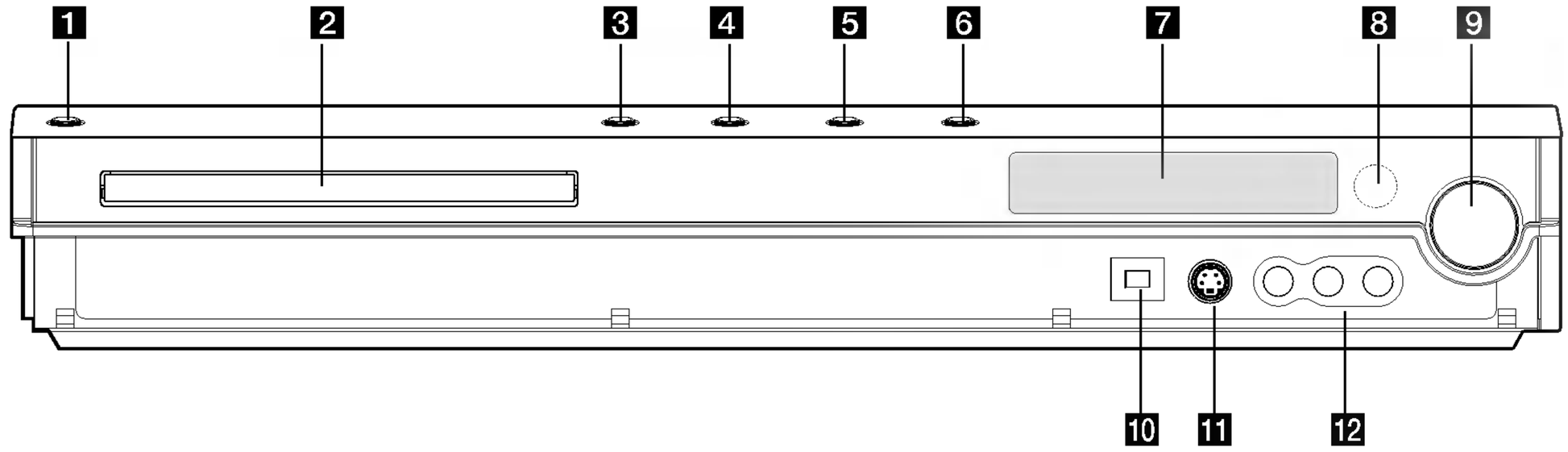

1 POWER
Switches the DVD Recorder Receiver ON or OFF.

2 Disc Tray
Insert a disc here.

3 OPEN/CLOSE (⏏)
Opens or closes the disc tray.

4 ► (PLAY)
Starts playback.

5 ■ (STOP)
Stops playback or recording.

6 ● (REC)
Starts recording. Press repeatedly to set the recording time.

7 Display window
Shows the current status of the recorder.

REC: The recorder is recording.

MUTE: The speaker sound is muted.

**dts , DD : ** Indicates encoding format of the current disc.

**DPLII: ** Indicates sound mode is DOLBY PRO LOGIC or DOLBY PRO LOGIC II.

**◷ : ** Indicates when the recorder is in timer recording or a timer recording is programmed.

**88888888:88:88 : ** Indicates clock, total playing time, elapsed time, title number, radio frequency, volume, Surround, chapter/track number, channel, etc.

8 Remote Sensor
Point the recorder remote control here.

9 VOLUME CONTROL
Turn the knob clockwise to increase sound level, counterclockwise to decrease sound level.

10 DV IN
Connect the DV output of a digital camcorder.

11 S-VIDEO IN
Connect the S-Video output of an external source (TV/ Monitor, VCR, Camcorder, etc.).

12 AV 2 (VIDEO IN/AUDIO IN (Left/Right))
Connect the audio/video output of an external source (Audio system, TV/ Monitor, VCR, Camcorder, etc.).

Remote Control Overview

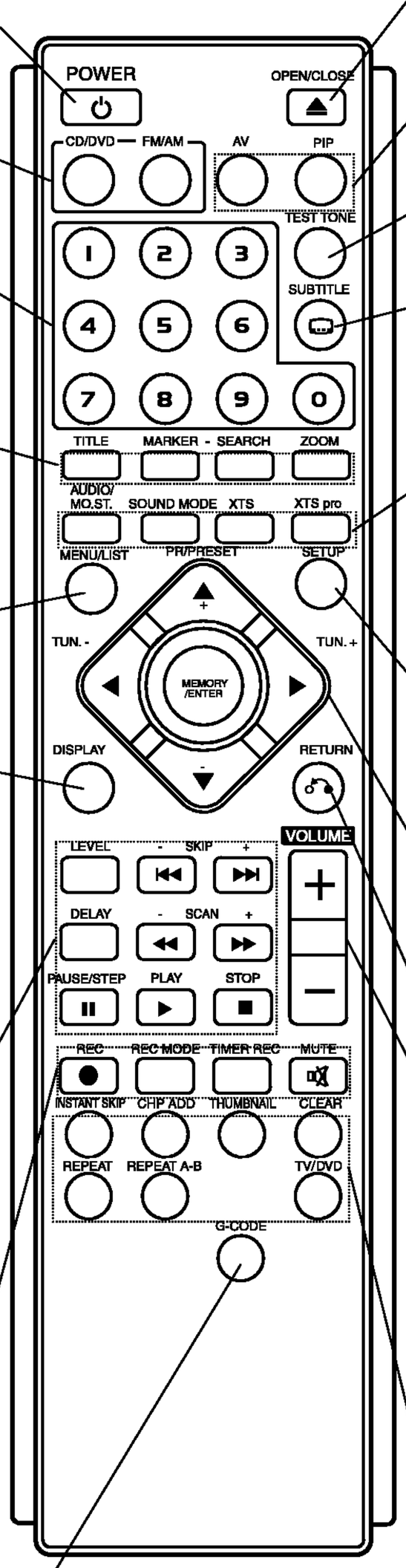

POWER
Turns DVD Recorder Receiver ON and OFF.

CD/DVD
Select the DVD Recorder Receiver's function mode to DVD.

FM/AM Tuner select
Select FM or AM band as the listening choice. (FM and AM bands).

0-9 numerical buttons
Selects numbered options in a menu.

TITLE
Displays the disc's Title menu, if available.

MARKER
Marks any point during playback.

SEARCH
Displays Marker Search menu.

ZOOM
Enlarges DVD video image.

MENU/LIST
Accesses menu on a DVD disc, Switches between Title List-Original and Title List-Playlist menu.

DISPLAY
Accesses On-Screen Display. Displays information while viewing a TV program.

LEVEL
To set the sound level of desired channel.

SKIP(-/+) (I◀◀ / ▶▶I)
Go to next chapter or track. Returns to beginning of current chapter or track or go to previous chapter or track.

DELAY
To set the delay time of each speaker in Dolby Digital and Dolby Pro Logic II mode.

SCAN(-/+) (◀◀/▶▶)
Search backward or forward.

PAUSE/STEP (II)
Pause playback or recording temporarily.

▶ (PLAY)
Starts playback.

STOP (■)
Stops playback or recording.

● REC
Starts recording. Press repeatedly to set the recording time.

REC MODE
Selects the recording mode: HQ, SQ, LQ or EQ.

TIMER REC
Displays Timer Record menu.

MUTE
Turns the sound on and off temporarily.

G-CODE
To display the program menu for G-CODE System programming.

OPEN/CLOSE
Opens and closes the disc tray.

AV
Changes the input to use for recording. (Tuner, AV 1, OPT, AV 2 or DV).

PIP
Selects PIP function on or off.

TEST TONE
To adjust the sound balance of the speakers from the listener's position.

SUBTITLE
Selects a subtitle language.

AUDIO/MO.ST.
- Selects an audio language.
- Selects STEREO or MONO.

SOUND MODE
Selects sound mode.

XTS
To enjoy great sound effect.

XTS pro
To enjoy more natural and realistic sound.

SETUP
Accesses or removes the Setup menu.

◄ ► ▲ ▼ (left/right/up/down)
Selects menu options.

PR/PRESET(+/-)(▲/▼):
Select programme of TV or Radio.

MEMORY/ENTER
- Confirms menu selections.
- Stores a radio station's frequency in the tuner's memory.

RETURN (↶)
Removes the menu.

VOLUME (+/-)
To adjust speaker volume and TV volume.

INSTANT SKIP
Skips 15 seconds forward on the disc (about the length of a typical TV: commercial).

CHP ADD
Inserts a chapter marker when playing/recording.

THUMBNAIL
Selects a thumbnail picture for the current title for use in the Title List or Chapter List menu.

CLEAR
Removes a mark on the Marker Search menu.

REPEAT
Repeat chapter, track, title or all.

REPEAT A-B
Repeats sequence between two points (A and B)

TV/DVD
To view channels selected by the recorder tuner or by the TV tuner.

Connections

Rear Panel Connections

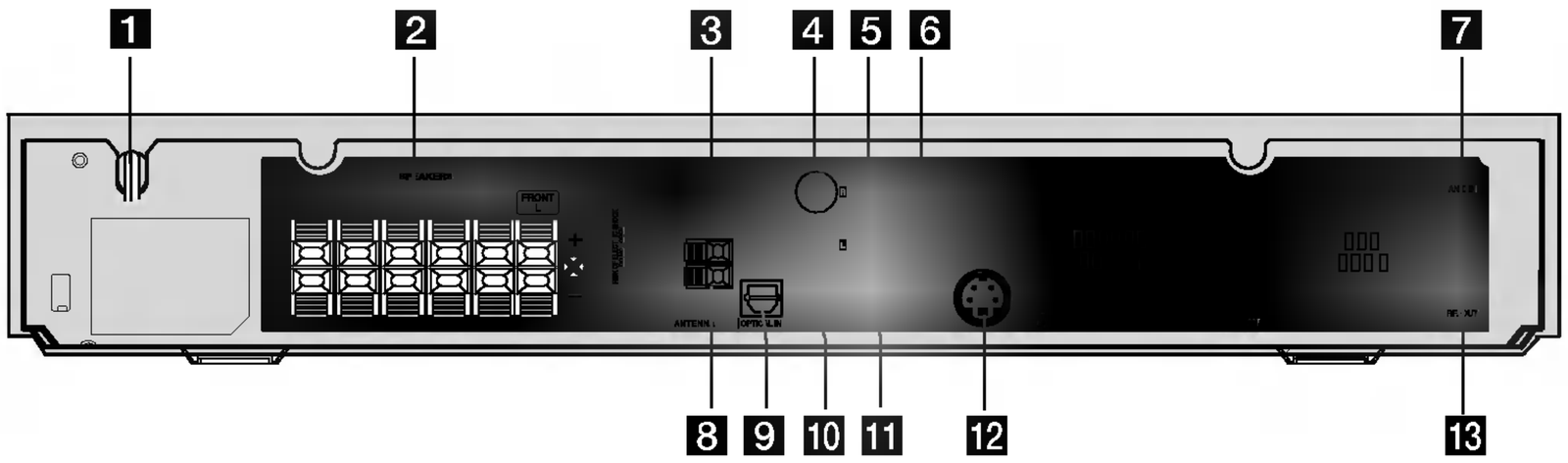

1 AC Power Cord
Plug into the power source.

2 SPEAKER CONNECTORS
Connect the six supplied speakers to these terminals.

3 FM ANTENNA CONNECTORS
Connect the FM antenna to this terminal.

4 AUDIO IN 1 (Left/Right)
Connect the audio output of an external source (Audio system, TV/Monitor, VCR, Camcorder).

5 AUDIO OUT (Left/Right)
Connect to a TV with audio inputs.

6 COMPONENT VIDEO OUT/PROGRESSIVE SCAN (Y Pb Pr)
Connect to a TV with Y Pb Pr inputs.

7 ANT.IN
Connect the aerial to this terminal.

8 AM ANTENNA CONNECTORS
Connect the AM antenna to this terminal.

9 OPTICAL IN Connector
Connect an optical output of Digital Device.

10 VIDEO IN 1
Connect the video output of an external source (Audio system, TV/Monitor, VCR, Camcorder).

14 VIDEO OUT
Connect to a TV with video inputs.

12 S-VIDEO OUT (DVD OUT)
Connect to an S-Video Input on TV.

13 RF. OUT
Passes the signal from the AERIAL to your TV/monitor

Connecting to the Aerial

Remove the aerial cable plug from your TV set and insert it into the aerial socket at the back of the recorder. Plug one end of the aerial cable into the TV socket on the recorder and the other end into the aerial input socket on your TV set.

RF coaxial connection

Connect the RF. OUT jack on the DVD Receiver Recorder to the aerial input jack on the TV using the 75-ohm Coaxial Cable supplied **(R)**. The RF. OUT jack passes the signal through from the AERIAL jack.

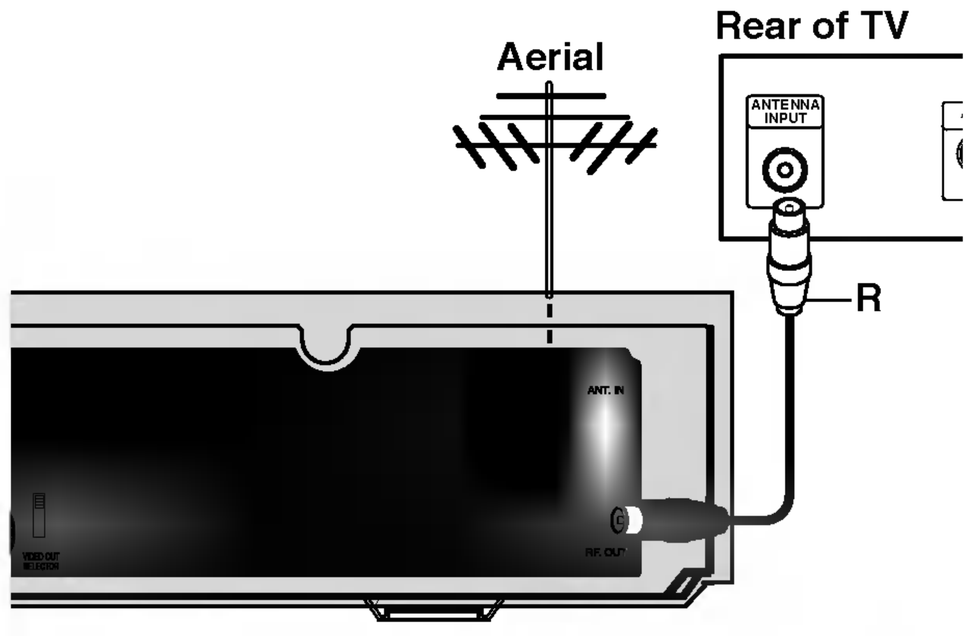

Rear of the DVD Recorder Receiver

Tips

- Depending on your TV and other equipment you wish to connect, there are various ways you could connect the recorder. Use only one of the connections described below.
- Please refer to the manuals of your TV, VCR, Stereo System or other devices as necessary to make the best connections.

⚠Caution

– Make sure the DVD Recorder Receiver is connected directly to the TV. Tune the TV to the correct video input channel.
– Do not connect the DVD Recorder Receiver's AUDIO OUT jack to the phono in jack (record deck) of your audio system.
– Do not connect your DVD Recorder Receiver via your VCR. The DVD image could be distorted by the copy protection system.

Rear of TV

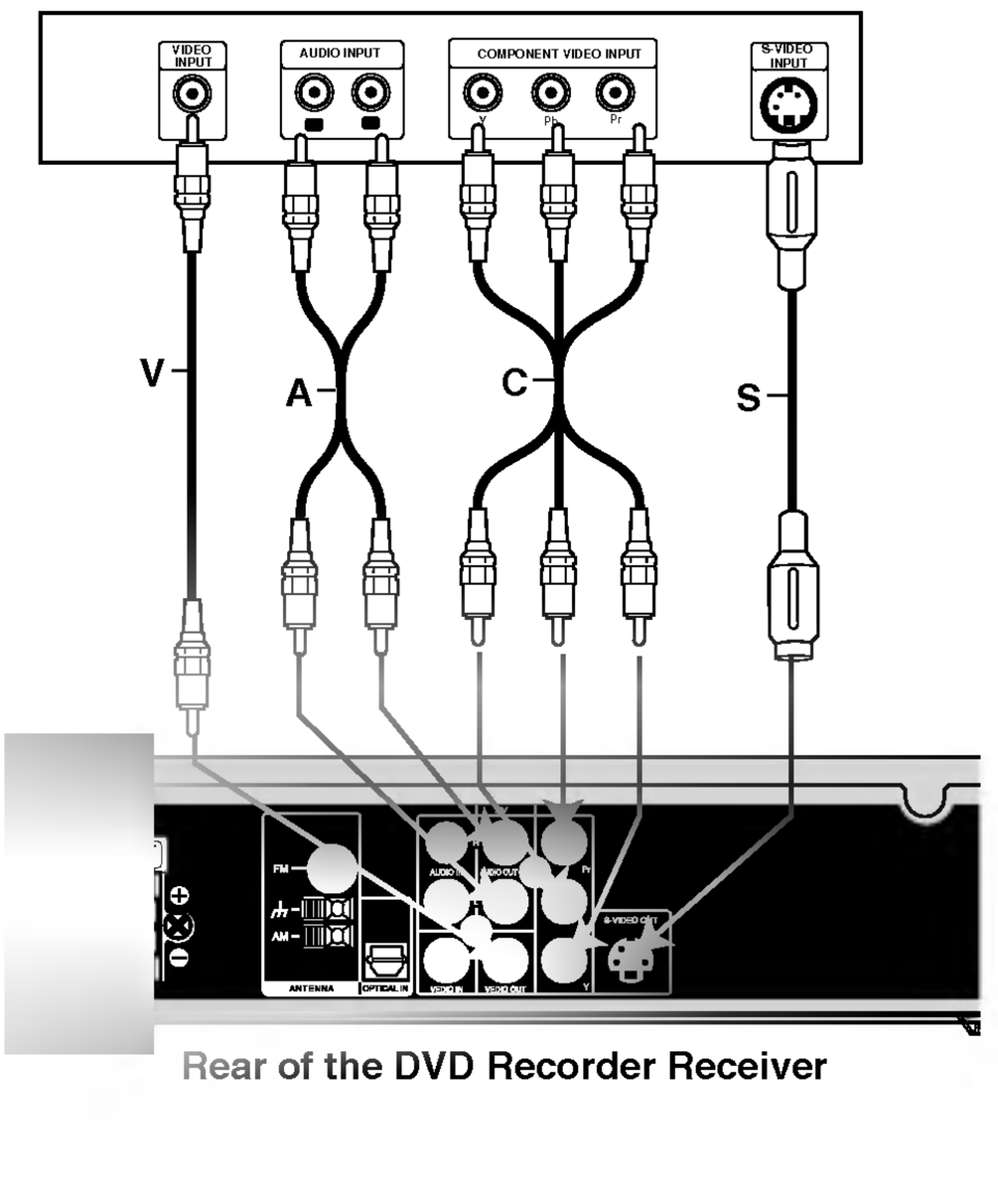

Rear of the DVD Recorder Receiver

Connections to Your TV

- Make one of the following connections, depending on the capabilities of your existing equipment.

S-Video connection

Connect the S-VIDEO OUT jack on the DVD Recorder to the S-Video in jack on the TV using the S-Video cable **(S)**.

Video connection

Connect the VIDEO OUT jack on the DVD Recorder Receiver to the video in jack on the TV using the video cable **(V)**.

Component Video connection

Connect the COMPONENT VIDEO OUT jacks on the DVD Recorder Receiver to the corresponding input jacks on the TV using an Y Pb Pr cable **(C)**.

Progressive Scan connection

If your television is a high-definition or "digital ready" television, you may take advantage of the recorder's progressive scan output for the highest video resolution possible. If your TV does not accept the Progressive Scan format, the picture will appear scrambled if you try Progressive Scan on the recorder.

Connect the COMPONENT VIDEO OUT/PROGRESSIVE SCAN jacks on the recorder to the corresponding in jacks on the TV using the Y Pb Pr cable **(C)**.

Notes :

- Set the Progressive to "On" on the setup menu for progressive signal, see page 25.
- Set the progressive to "Off" by removing any disc from the unit and close the disc tray. See that "NO DISC" is displayed on the display window. Then press STOP and hold it for five seconds before releasing it.
- Progressive scan does not work with the analog video connections (yellow VIDEO OUT jack).

Audio (Left/Right) Connection

Connect the left and right AUDIO OUT jacks of the DVD Recorder Receiver to the audio left and right IN jacks on the TV using the audio cables **(A)**. Do not connect the DVD Recorder Receiver's AUDIO OUT jack to the phono in jack (record deck) of your audio system.

Accessory Audio/Video (A/V) Connections to DVD Recorder Receiver

Connect the input jacks (AV1, AV2) on the DVD Recorder Receiver to the audio/video out jacks on your accessory component, using audio/video cables.

Note:

If you use the S-VIDEO IN jack on the front panel, the VIDEO IN jack on the front panel is not available.

Jack panel of Accessory Component (VCR, Camcorder, etc.)

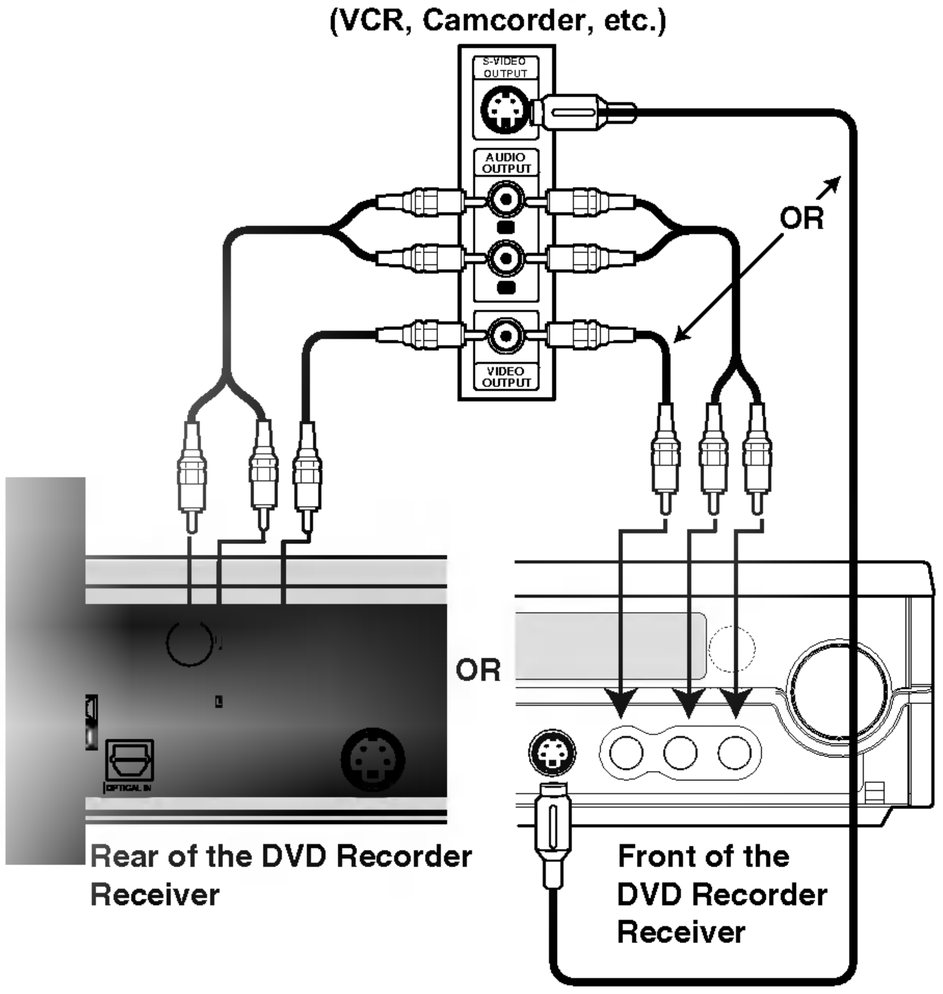

Rear of the DVD Recorder Receiver

Front of the DVD Recorder Receiver

Connecting a Digital Camcorder

Using the front panel DV IN jack, it is possible to connect a DV digital camcorder and digitally transfer DV tapes to DVD.

Use a DV cable (not supplied) to connect the DV in/out jack of your DV camcorder to the front panel DV IN jack of this DVD Recorder Receiver.

Note:

This jack is for connection to DV digital camcorder only. It is not compatible with digital satellite tuner or D-VHS video decks.

DV Digital Camcorder

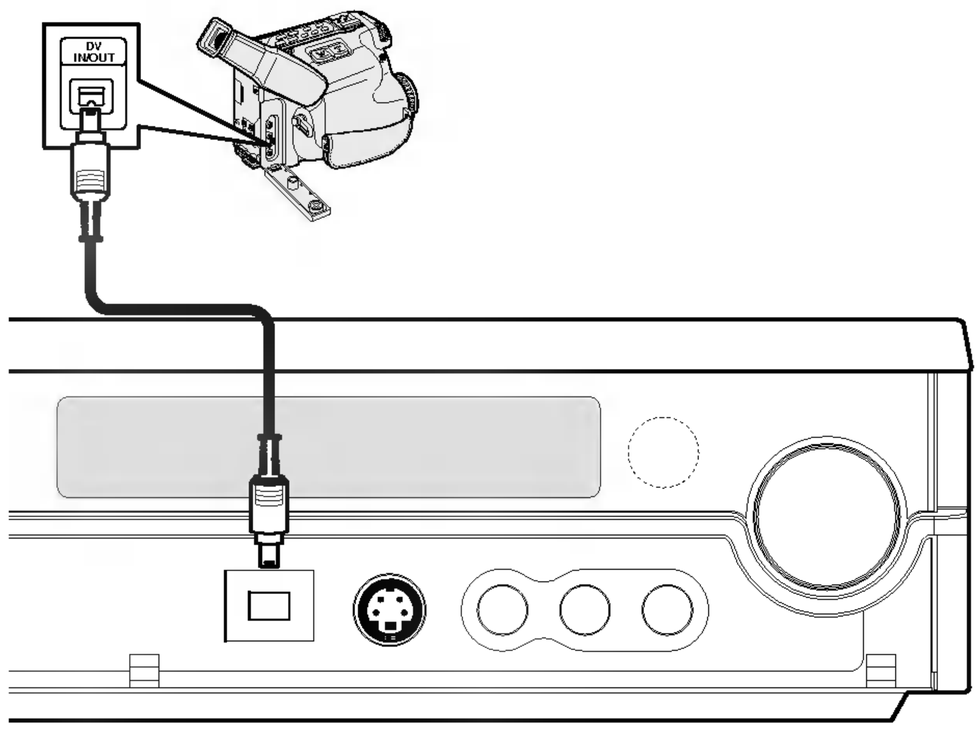

Front of the DVD Recorder Receiver

Connections (Continued)

Radio Aerial Connections

Connect the supplied FM/AM aerial for listening to the radio.

- Connect the AM Loop aerial to the AM aerial connector.
- Connect the FM Wire aerial to the FM aerial connector.

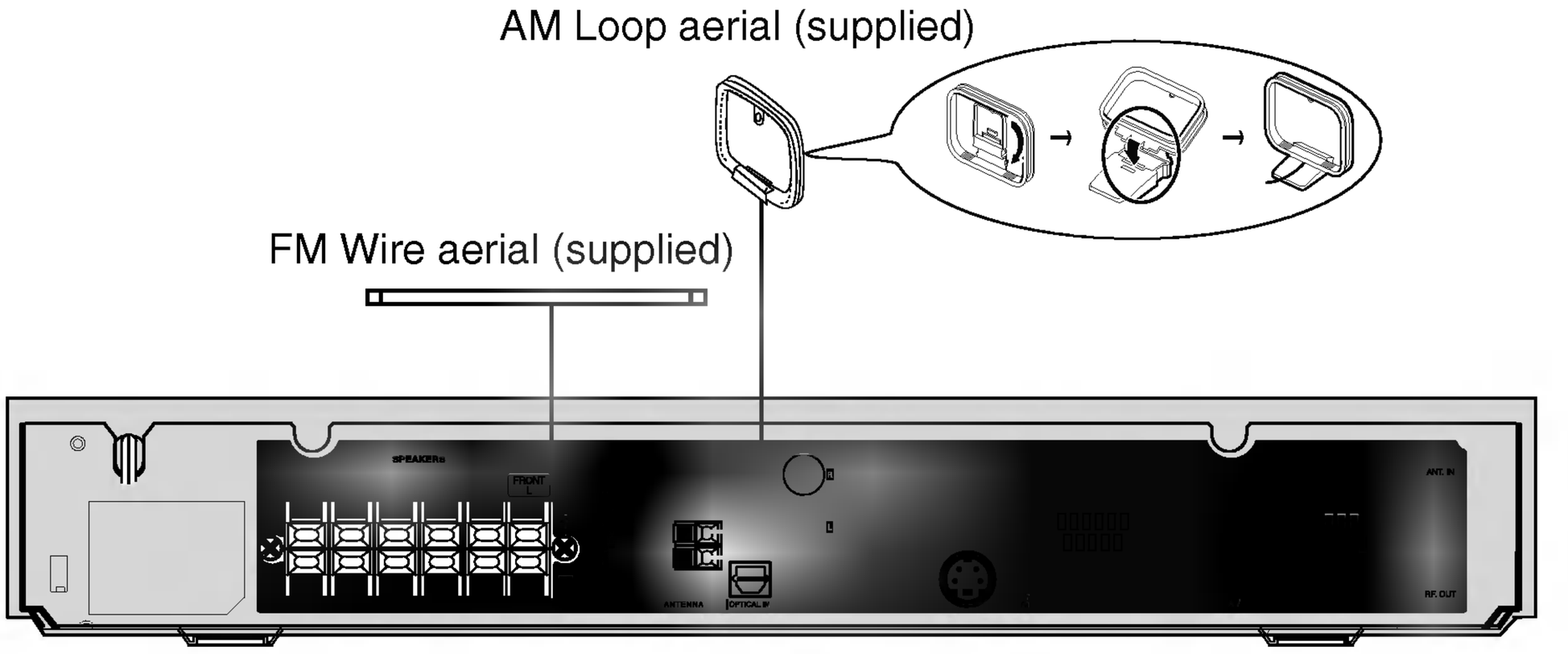

Notes:

- To prevent noise pickup, keep the AM Loop aerial away from the DVD/CD Receiver and other components.
- Be sure to fully extend the FM wire aerial.
- After connecting the FM Wire aerial, keep it as horizontal as possible.

About Ferrite Core

Be sure to attach the ferrite core to the speaker cables (for connecting to this unit).
This ferrite core can reduce noises.

How to attach the ferrite core

1 Press the stopper [a] of the ferrite core to open.

2 Wind the cable once on the ferrite core.

3 Close the ferrite core unitl it clicks.

Note:

- Attach the ferrite core near the unit (Refer to the fig.3 and comment.).

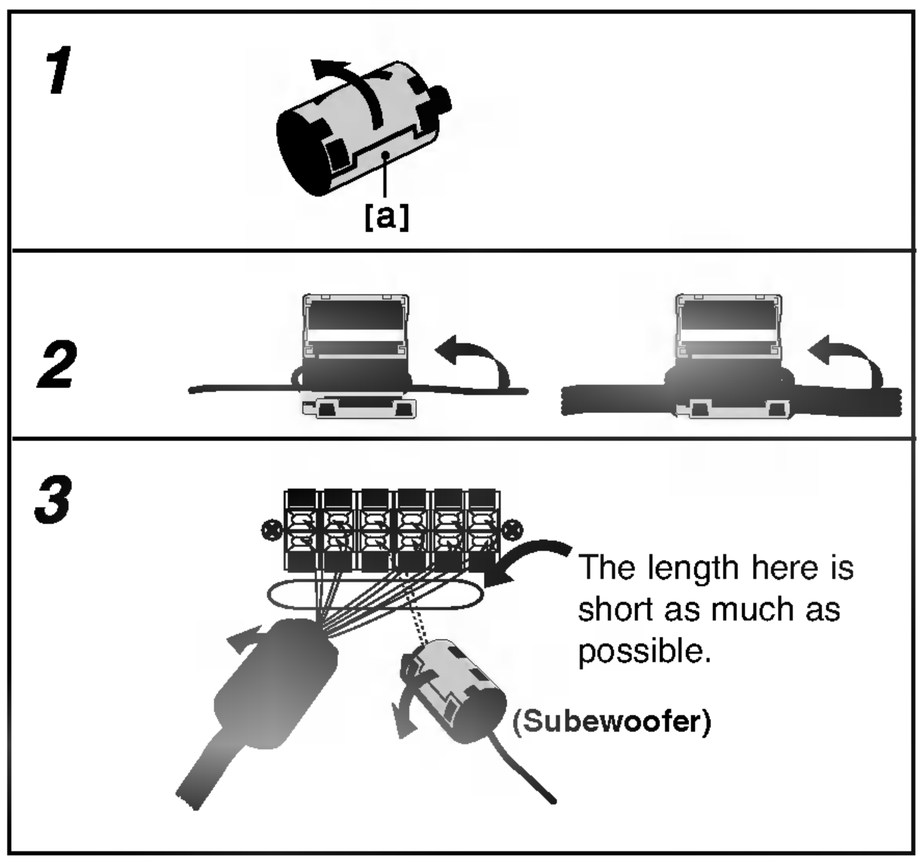

Speaker System Connection

Connect the speakers using the supplied speaker cords.

To obtain the best possible surround sound, adjust the speaker parameters (volume, distance, etc.).



Notes

- Be sure to match the speaker cable to the appropriate terminal on the components: + to + and – to –. If the cables are reversed, the sound will be distorted and will lack base.
- If you use front speakers with low maximum input rating, adjust the volume carefully to avoid excessive output on the speakers.

Before Operation

Speaker Positioning

In the case of normal position use the 6 speakers (2 front speakers, 1 center speaker, 2 rear speakers and sub-woofer).
If you want to play the excellent bass sound, DTS digital surround or Dolby Digital surround, you should connect a subwoofer.

- **Front speakers**
  According to your listening position set up the speakers for equal distance. And by hearing position set up the interval between speakers to 45 degree.
- **Center speaker**
  The center speaker and front speakers are ideally the same height. But normally place it above or below the television.
- **Rear speakers**
  Place left and right behind the listening area. These speakers recreate sound motion and atmosphere required for surround sound playback. For best results, do not install the rear speakers too far behind the listening position and install them at or above the level of the listener's ears. It is also effective to direct the rear speakers towards a wall or ceiling to further disperse the sound.
  In the case of a smaller room size, if the audience is near to the rear wall set the rear speakers opposite each other, and set the rear speakers above 60 - 90 cm than the listener's ears.
- **Subwoofer**
  This can be placed in any front position.

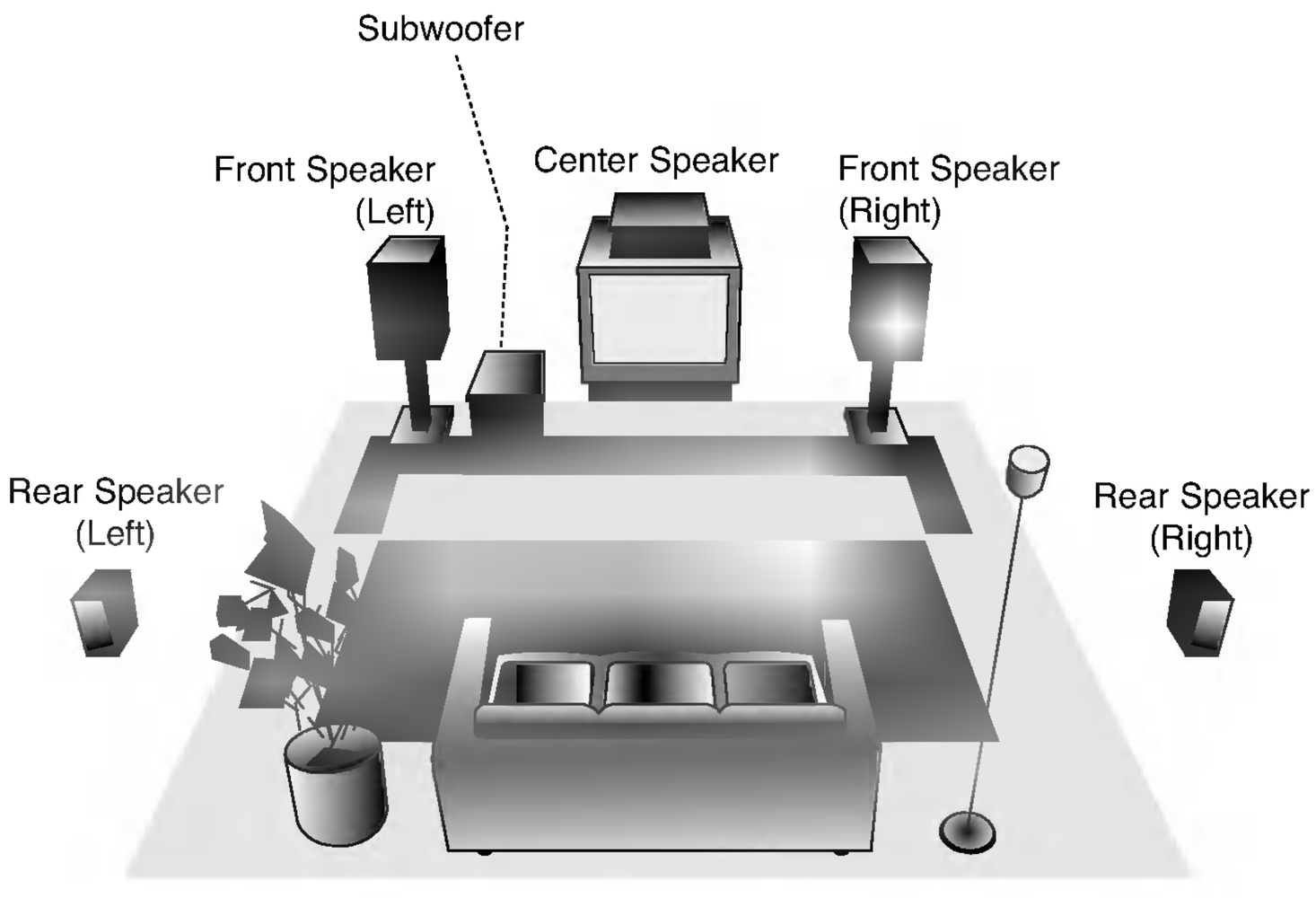

Speaker Positioning Example

Mini Glossary for Sound Mode

dts

Allows you to enjoy 5.1(or 6) discrete channels of high quality digital audio from DTS program sources bearing the trademark such as discs, DVD and compact discs, etc. DTS Digital Surround delivers up to 6 channels of transparent audio(which means identical to the original masters) and results in exceptional clarity throughout a true 360 degree sound field. The term DTS is a trademark of DTS Technology, LLC. Manufactured under license from DTS Technology, LLC.

DIGITAL

The Dolby Digital surround format lets you enjoy up to 5.1(or 6) channels of digital surround sound from a Dolby Digital program source. If you play DVDs with " " mark, you can enjoy even better sound quality, greater spatial accuracy, and improved dynamic range.

PRO LOGIC (II)

Dolby Pro Logic II creates five full-bandwidth output channels from two-channel sources. This is done using an advanced, high-purity matrix surround decoder that extracts the spatial properties of the original recording without adding any new sounds or tonal colorations.

MOVIE mode:
The Movie mode is for use with stereo television shows and all programs encoded in Dolby Surround. The result is enhanced soundfield directionality that approaches the quality of discrete 5.1-channel sound.

MUSIC mode:
The Music mode is for use with any stereo music recordings, and provides a wide and deep sound space. The Music mode includes controls that allow the sound to be tailored to individual listening tastes.

MATRIX mode:
The Matrix mode is the same as the Music mode except that the directional enhancement logic is turned off. It may be used to enhance mono signals by making them seem "larger." The Matrix mode may also find use in auto systems, where the fluctuations from poor FM stereo reception can otherwise cause disturbing surround signals from a logic decoder. The ultimate "cure" for poor FM stereo reception may be simply to force the audio to mono.

HALL 1

When playing recordings of live music and classic, this mode provides a feeling similar to actually being in a small concert hall.

HALL 2

When playing recordings of live music and classic, this mode provides a feeling similar to actually being in a large concert hall.

THEATER

This mode provides a three dimensional effect similar to that of a movie theater.

BYPASS

Outputs the sound from the front left and right speakers and subwoofer.
You can select BYPASS by pressing SOUND MODE on the remote control.

Delay Time Setting

In Dolby Digital or Dolby Pro Logic mode it is assumed that the distance from the listener to each of the speakers is equal. If not then setting the delay times of the center or rear speakers the sound will be heard simultaneously by the listener.
The interval from the speakers to the listener. If the distance from the listener to each speaker is the same, in the Dolby Digital and Dolby Pro Logic mode the delay time of each speaker is as follows

In Dolby Digital mode
Center delay time : 0 ~ 5ms
Rear delay time: 0 ~ 15ms
In Dolby Pro Logic mode
Center delay time : cannot be set
If the rear delay time is set in Dolby Digital mode, in the Dolby Pro Logic mode the delay time will be automatically set.
The delay time is 1 msec per 30 cm.
If the Center and rear speakers are further than the front speakers from the listener, the delay time will be at minimum.

Surround delay time setting

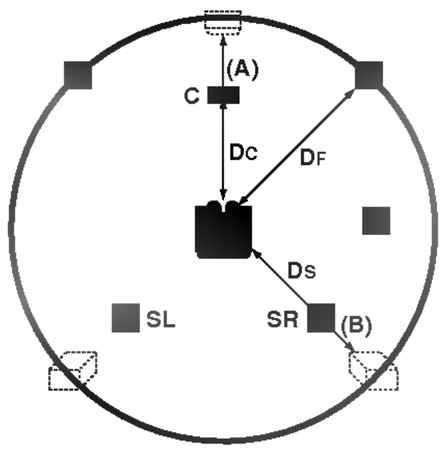

If the distance of Ds is equal to or longer than the DF in the left figure, set the Surround Delay Time as 0ms. Otherwise, change the setting according to the below.
Ex) If the distance from front speakers to the listener is 3 m and from rear speakers from the listener is 1.5 m, in the Dolby Digital mode the rear delay time is 5 msec.
3m (DF) - 1.5m (Ds) = 1.5m (B)
1.5m (B) = 150cm / 30cm = 5msec

In Dolby Pro Logic II (Surround delay time):
- Pro Logic: 15 ~ 30msec
- Movie: 10 ~ 25msec
- Music: 0 ~ 15msec
- Matrix: 0 ~ 15msec

Center delay time setting (Dolby Digital mode only)
If the distance of DF is equal to the distance of DC in the left figure, set the Center Delay Time as 0ms. Otherwise, change the setting according to the table below.
Ex) If the distance from the front speakers to the listener is 3m and from the center speaker to the listener is 2.4m, the center delay time is 2msec.
3m (DF) - 2.4m (DC) = 60cm (A)
60cm (A) / 30cm = 2msec

Setting the delay time in the Dolby Digital and Dolby Pro Logic (II) mode

1 Press DELAY.
The current surround delay time appears in the Display Window.

2 Press ▲/▼ to change the delay time.

3 If setting is complete, press DELAY.

Note:
You can adjust the center delay time only in the Dolby Digital mode and its delay time appears.

Setting the Sound Effects in the Music mode of Dolby Pro Logic (II)

1 Press SOUND MODE repeatedly to select the Music mode.

Each time you press these buttons, the sound mode is changed in the following order;

PRO LOGIC → PLII MOVIE → PLII MUSIC → PLII MATRIX→ HALL 1→ HALL 2 → THEATER → BYPASS ...

2 Press DELAY.
The current surround delay time appears in the Display Window.

3 Press ◄/► to select a desired Sound mode.
Each time you press the ◄/► button, it is changed in the following order;

PANO ↔ C WIDT ↔ DIMEN...

4 Press ▲/▼ to change the steps.

- **C WIDT:** 0 ~ +7
- **DIMEN:** -3 ~ +3
- **PANO:** ON/OFF

5 If setting is complete, press DELAY.

PANO (PANORAMA)

This control extends the front stereo image to include the surround speakers for an exciting “wraparound” effect with side-wall imaging. It is particularly effective for recordings which have strong left- or right-channel elements in the mix, as these are detected and accentuated by the Panorama process.

C WIDT (Center Width)

This control allows center-channel sounds to be positioned between the center speaker and the left/right speakers over a range of eight steps. Step “3” uses a combination of all three front speakers to give the best vocal imaging and most seamless soundstage presentation, and is recommended for most recordings. Step “0” places all center sound in the center speaker. Step “7” places all center sound equally in the left/right speakers, just as in conventional stereo.

DIMEN (DIMENSION)

This control allows the user to gradually adjust the sound field either towards the front or the rear. This can be useful to help achieve the desired balance from all the speakers with certain recordings that may contain either too much or too little spatial effect. Step “0” is the recommended setting, which has no effect on the sound. Steps 1, 2, and 3 gradually move the sound forward, and steps –1, –2, and –3 move the sound towards the surrounds.

Sound Level

You can set the sound level of the desired channel.

1 **Press LEVEL on the remote control.**
The level indicator will appear in the Display Window.

2 **Press ◄/► to select a desired speaker to set.**
Each time you press the ◄/► button, it is changed in the following order;

FL (Front Left) → C (Center) → FR (Front Right) →
SR (Surround Right) → SL (Surround Left) →
SW (Subwoofer) → FL (Front Left) ...

3 **Press ▼/▲ to adjust the sound level of the selected channel. (-6dB ~ +6dB)**

4 **Repeat step 2-3 and adjust the sound level of the other channels.**

5 **If setting is complete, press LEVEL.**

Test Tone

This function allows you to can easily adjust the sound balance of the speakers from the listener's position.

1 **Select the test tone mode by pressing TEST TONE.**

A hiss noise comes out for 2 seconds from each speakers in the following order;

FL (Front Left) → C (Center) → FR (Front Right) →
SR (Surround Right) → SL (Surround Left) →
SW (Subwoofer) → FL (Front Left) ...

2 **You can adjust the sound level while the test tone is operating. First press LEVEL then press the ▼/▲ buttons, so that the sound level from all the speakers is same from the listener’s position.**

- During the test tone, if you adjust the sound level, it will be paused in the current speaker channel.

3 **If setting is complete, press TEST TONE.**

XTS (Excellent True Sound)

You can enjoy the vivid stereophonic sound of the digital original source without any signal distortion.

Each time you press XTS during 2 channel mode, the setting changes in the following order.
XTS- 1 → XTS- 2 → XTS- 3 → XTS OFF ...

Tips:

- XTS- 1: When playing the movie with the weak bass sound relatively to the general music, it enforces the sense of sound at woofer for you to satisfy with.
- XTS- 2: In the mode of 2 CH BYPASS, It creates the high display effect by playing the sound source via the rear speakers same as the front speakers.
- XTS- 3: You can operate both XTS- 1 and XTS- 2 simultaneously and it can complement the relative degrading of the sound pitch of the woofer at the XTS- 2 mode.

Note:

- The XTS- 2 mode is temporarily disabled when changing from 2.1 CH to 5.1 CH and it is enabled when changing it to 2.1 CH.

XTS pro

The unique sound quality of the LG Technology creates the optimum sound for you to play the perfect playback of the original sound and to feel the living sound source.

Each time you press **XTS pro** the setting changes in the following order.

XTS-PRO ON → XTS-PRO OFF

Pre-operation Setup

Initial Settings

In this menu system, there are several ways to customize the settings provided. Most menus consist of three levels to set up the options, but some require greater depth for the variety of settings. If you press SETUP, only the first and second level of the menu system will appear on the TV screen. The third level can be displayed by pressing ►. For navigating the menu levels, you will see "►" on the right side of the menu label to help you go to the next level.

To bring up and exit the Menu:
Press SETUP to bring up the menu. A second press of SETUP will take you back to initial screen.

To go to the next level:
Press ► on the remote control.

To go back to the previous level:
Press ◄ on the remote control.

General Operation

1 **Press SETUP.**
The Setup menu appears.

2 **Use ▲ / ▼ to select the desired option.**

3 **While the desired item is selected, press ► to move to the second level.**

4 **Use ▲ / ▼ to select the second desired option.**

5 **Press ► to move to the third level.**

6 **Use ▲ / ▼ to select the desired setting then press ENTER to confirm your selection.**
Some items require additional steps.

7 **Press SETUP to exit the Setup menu.**

General

Auto Programming

This DVD Recorder Receiver is equipped with a frequency
synthesized tuner capable of receiving up to 88 TV channels.

Preparation:

- Connect the DVD Recorder Receiver to the desired type of aerial, as shown in Connecting to the Aerial on page 13.



1 **Press SETUP.**
The Setup menu appears.

2 **Use ▲ / ▼ to select the General option.**

3 **While the General option is selected, press ► to move to the second level.**

4 **Use ▲ / ▼ to select the Auto Programming option.**

5 **Press ► to move to the third level.**
"Start" icon is highlighted.

6 **Press ENTER to begin the channel search.**
The tuner will automatically cycle through all available channels in the area and place them in the tuner's memory.

Note :
After you have connected your DVD Recorder Receiver for the very first time. If you press SETUP for initial setting, you can only set the "Auto Programming" option. Then you can set the other options.

Program Edit

You can edit a channel manually (add, delete, name, move, etc.).

1 **Press SETUP.**
The Setup menu appears.

2 **Use ▲ / ▼ to select the General option.**

3 **While the General option is selected, press ► to move to the second level.**

4 **Use ▲ / ▼ to select the Program Edit option then press ► to move to the third level.**
"Edit" icon is highlighted.



5 **Press ENTER.**
Program List menu appears.

6 **Use ▲ / ▼ to select a PR number then press ENTER.**
Program List options appears on the left side of the menu display.

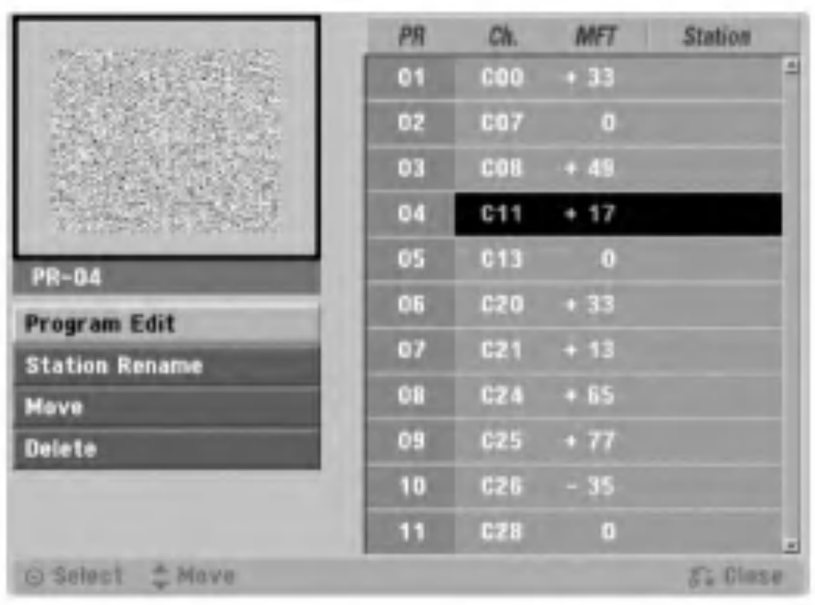

7 **Use ▲ / ▼ to select an option then press ENTER to confirm.**

Program Edit: Edits the selected program.

Station Rename: Edits the station name.

Move: Moves the program's location on the program list.

Delete: Deletes the program from program list.

8 **Press RETURN (↶) repeatedly to exit Program List menu.**

Program Edit

You can perform a search to select and store TV channels manually.

1. Use ▲ / ▼ to select a program on the Program List menu then press ENTER.
   Program List options appears on the left side of the Program List menu.
2. Use ▲ / ▼ to select 'Program Edit' option from the options then press ENTER.
   Program Edit menu appears.
3. Use ◄ / ► to select the item and press ▲ / ▼ to change the setting.



- [PR] indicates the selected programme position.
- [Seek] Searches for a channel automatically. Searching stops when the recorder tunes in a channel.
- [Ch.] Changes the channel number.
- [MFT] Fine tunes the channel to obtain a clearer picture.

4. Choose OK then press ENTER to confirm the setting and returns to the Program List menu.

Program Edit (Continued)

Station Rename

You can name stations independently. Names can be up to 5 characters long.

1. Use ▲ / ▼ to select a program on the Program List menu then press ENTER.
   Program List options appears on the left side of the Program List menu.
2. Use ▲ / ▼ to select 'Station Rename' option from Program List options then press ENTER.
   Keyboard menu appears.



3. Enter a name for the station. Use ▲ ▼ ◄ ► to select a character then press ENTER to confirm your selection.
   - **Alphabet Capital:** Switches the keyboard upper case characters.
   - **Alphabet Small:** Switches the keyboard to lower case characters.
   - **Symbol:** Switches the keyboard to symbol characters.
   - **OK:** Select to finish.
   - **Cancel:** Select to exit the menu.
   - **Space:** Inserts a space at the cursor position.
   - **Delete:** Deletes the previous character at the cursor position.
   - **◄ / ►:** Moves cursor to left or right.

   Tip

   Remote control buttons for entering a name
   Numbers (0~9): Enters the character of corresponding location on the selected column.

4. Choose 'OK' icon then press ENTER to fix the name and returns to the Program List menu.

Sorting TV channels manually

You can sort the program's position on the Program List menu.

1. Use ▲ / ▼ to select a program on the Program List menu then press ENTER.
   Program List options appears on the left side of the Program List menu.
2. Use ▲ / ▼ to select 'Move' option from Program List options then press ENTER.
3. Use ▲ / ▼ to select a desired position then press ENTER to store.

Deleting a program

You can delete a program on the Program List menu.

1. Use ▲ / ▼ to select a program on the Program List menu then press ENTER.
   Program List options appears on the left side of the Program List menu.
2. Use ▲ / ▼ to select 'Delete' option from Program List options then press ENTER. The Program is deleted.

Manual Clock Set

1 **Press SETUP.**
The Setup menu appears.

2 **Use ▲ / ▼ to select the General menu.**

3 **While the General option is selected, press ► to move to the second level.**

4 **Use ▲ / ▼ to select the Clock Set option.**

5 **Press ► to move to the third level.**



6 **Enter the necessary information for date and time.**
◄ / ► (left/right): Moves the cursor to the previous or next column.
▲ / ▼ (up/down): Changes the setting at the current cursor position.

7 **Press ENTER to confirm your setting, then press SETUP to exit the Setup menu.**

TV Aspect Ratio

You can choose:
- 4:3: Select when a standard 4:3 TV is connected.
- 16:9: Select when a 16:9 wide TV is connected.



Display Mode

Display Mode setting works only when the TV Aspect Ratio is set to “4:3”.

You can choose:
- Letter Box: Displays a wide picture with bands on the upper and lower portions of the screen.
- Pan Scan: Automatically displays the wide picture on the entire screen and cuts off the portions that do not fit.

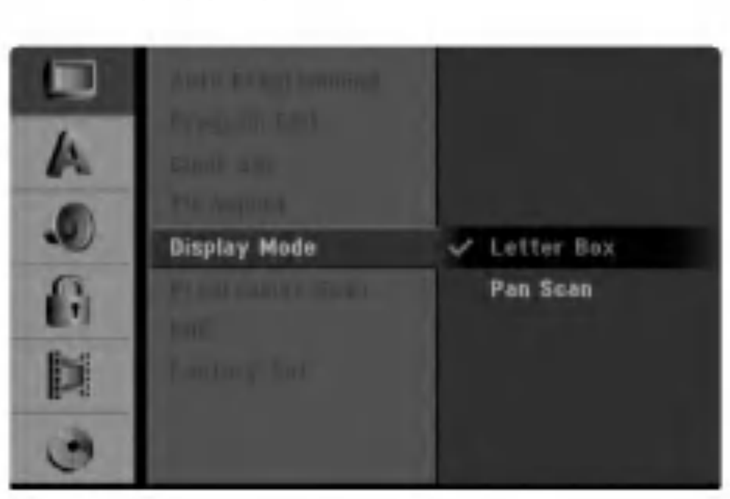

Progressive Scan

Progressive Scan Video provides the highest quality pictures with less flickering.
If you are using the COMPONENT VIDEO OUT/ PROGRESSIVE SCAN jacks, but are connecting the recorder to a standard (analog) television, set Progressive Scan to [OFF].
If you are using the COMPONENT VIDEO OUT/ PROGRESSIVE SCAN jacks for connection to a TV or monitor that is compatible with a progressive scan signal, set Progressive Scan to [ON].



⚠Caution
Once the setting for Progressive Scan output is entered, an image will only be visible on a Progressive Scan compatible TV or monitor. If you set Progressive Scan to [ON] in error, you must reset the recorder. First, remove the disc in the recorder. Next, press STOP (■) and hold it for five seconds before releasing it. The video output will be restored to the standard setting, and a picture will once again be visible on a conventional analog TV or monitor.

PBC

The PBC setting can be changed. Set Playback Control (PBC) to ON or OFF.

- ON: Video CDs with PBC are played according to the PBC.
- OFF: Video CDs with PBC are played the same way as Audio CDs.

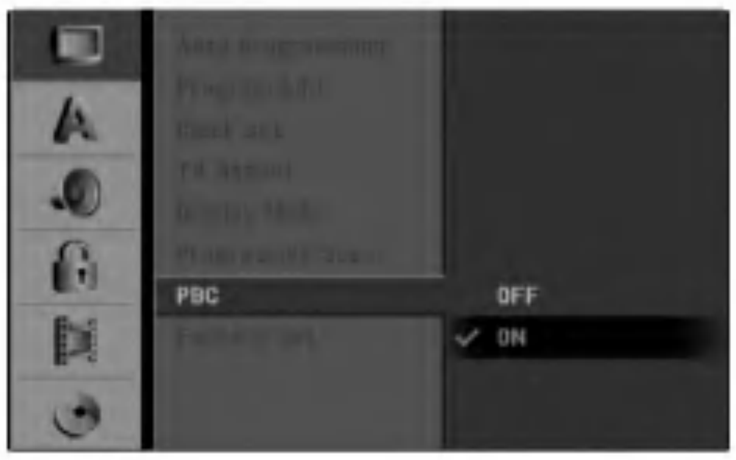

Factory Set

If you need to, you can reset the Recorder to all its factory settings. Select “Set” icon then press ENTER.

Note :

Some options cannot be reset. (Rating, Password, and Area Code)



Language

Display Language

Select a language for the Setup menu and on-screen display.



Disc Language

Select a language for the disc’s Menu, Audio, and Subtitle.

- [Original]Refers to the original language in which the disc was recorded.
- [Other] To select another language, press number buttons then ENTER to enter the corresponding 4-digit number according to the language code list in the reference chapter (see page 57). If you enter the wrong language code, press CLEAR.
- [Off](for Disc Subtitle) : Turn off Subtitle.



Audio

Dolby Digital

- [Bitstream]: Select “Bitstream” when enjoying original Dolby Digital Audio (Set to this mode ordinary).
- [PCM]: DVDs encoded in Dolby Digital will be automatically downmixed to two-channel PCM audio (refer to Audio Channel Selection on page 35).



DRC (Dynamic Range Control)

With the DVD format, you can hear a program’s soundtrack in the most accurate and realistic presentation possible, thanks to digital audio technology. However, you may wish to compress the dynamic range of the audio output (the difference between the loudest sounds and the quietest ones). Then, you may listen to a movie at a lower volume without losing clarity of sound. Set DRC to [ON] for this effect.



Lock (Parental Control)

Set Password

Changing the 4-digit code

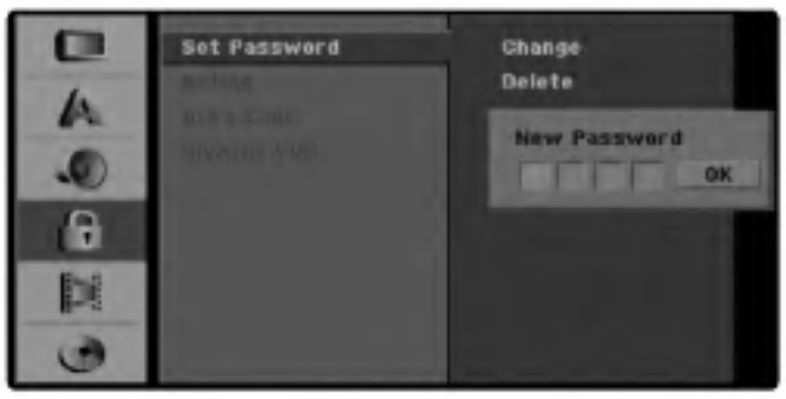

1 **Press SETUP.**
The Setup menu appears.

2 **Use ▲ / ▼ to select the Lock option.**

3 **While the Lock option is selected, press ► to move to the second level.**

4 **Use ▲ / ▼ to select the Set Password option.**

5 **Press ► to move to the third level.**

6 **If you have not entered a password yet;**
Enter a 4-digit password using the numbered buttons to create a personal 4-digit security password, then press ENTER. Enter the 4-digit password again and press ENTER to verify when "OK" is highlighted.
If you have already entered a password;
Enter a 4-digit password using the numbered buttons to confirm the personal 4-digit security password, then press ENTER when "OK" is highlighted.

Tip

If you make a mistake before pressing ENTER, press ◄ repeatedly to delete password numbers one by one then correct it.

7 **While "Change" is selected, press ENTER.**
If you select "Delete" then press ENTER. The password is deleted.

8 **Enter a 4-digit password using the numbered buttons to create a personal 4-digit security password then press ENTER when "OK" is highlighted.**

9 **Enter the 4-digit password again and press ENTER to verify when "OK" is highlighted.**

Tip

If you a mistake before pressing ENTER, press ◄ repeatedly to delete password numbers one by one then correct it.

If you forget your 4-digit code

If you forget your password, to clear the current password, follow the procedure below.

1. Press SETUP to display the Setup menu.
2. Use the Number buttons to enter the 6-digit number "210499".
3. Select "Ok" then press ENTER. The 4-digit password is cleared. Enter a new code as shown left.

Rating

Movies on DVDs may contain scenes not suitable for children. Therefore, discs may contain Parental Control information that applies to the complete disc or to certain scenes on the disc. These scenes are rated from Level 1 to 8, and alternatively, more suitable scenes are available for selection on some discs. Ratings are country-dependent. The Parental Control feature allows you to prevent discs from being played by your children or to have certain discs played with alternate scenes.



1 **Follow steps 1-3 as shown above to the left (Set Password).**

2 **Use ▲ / ▼ to select the Rating option.**

3 **Press ► to move to the third level.**

4 **Follow step 6 as shown above to the left (Set Password).**

5 **Select a rating from 1 to 8 using the ▲ / ▼ buttons. One (1) has the least playback restrictions. Eight (8) has the most playback restrictions.**
No limit: *If you select No limit, Parental Control is not active. The disc will play in full.*
Level 1 to 8: *Some discs contain scenes not suitable for children. If you set a rating for the Recorder, all disc scenes with the same rating or lower will be played. Higher rated scenes will not be played unless an alternate scene is available on the disc. The alternate scene must have the same rating or a lower one. If no suitable alternate scene is found, playback will stop. You must enter the 4-digit password or change the rating level in order to play the disc.*

6 **Press ENTER to confirm your rating selection, then press SETUP to exit the menu.**

Area Code

Enter the code of a country/area whose standards were used to rate the DVD video disc, referring to the list (See “Area Codes”, page 57.).



1 **Press SETUP.**
The Setup menu appears.

2 **Use ▲ / ▼ to select the Lock option.**

3 **While the Lock option is selected, press ► to move to the second level.**

4 **Use ▲ / ▼ to select the Area Code option.**

5 **Press ► to move to the third level.**

6 **If you have not entered a password yet;**
Enter a 4-digit password using the numbered buttons to create a personal 4-digit security password, then press ENTER. Enter the 4-digit password again and press ENTER to verify when “OK” is highlighted.
If you have already entered a password;
Enter a 4-digit password using the numbered buttons to confirm the personal 4-digit security password, then press ENTER when “OK” is highlighted.

Tip

If you a mistake before pressing ENTER, press ◄ repeatedly to delete password numbers one by one then correct it.

7 **Select the first character using the ▲ / ▼ buttons.**

8 **Shift the cursor using ► buttons and select the second character using ▲ / ▼ buttons.**

9 **Press ENTER to confirm your area code selection, then press SETUP to exit the menu.**

DivX(R) VOD

We provide you the DivX® VOD (Video On Demand) registration code that allows you to rent and purchase videos using the DivX® VOD service. For more information, visit www.divx.com/vod.

1. Select [DivX(R) VOD] option then press ►.
2. Press ENTER while [Enter] is selected and the registration code will appear.



3. Use the registration code to purchase or rent the videos from DivX® VOD service at www.divx.com/vod. Follow the instructions and download the video onto a disc for playback on this unit.

Note:

All the downloaded videos from DivX® VOD can only be played back on this unit.

Recording

Record Mode Set

You can set the picture quality for recording; HQ (High Quality), SQ (Standard Quality), LQ (Low Quality), EQ (Extend Quality).



Record Aspect Ratio

When recording, you can set the recording aspect ratio to suit the material you're recording (16:9 widescreen, or 4:3 standard).



DV Record Audio

You need to set this if you have a camcorder using 32kHz/12-bit sound connected to the front panel DV IN port.
Some digital camcorders have two stereo tracks for audio. One is recorded at the time of shooting; the other is for over-dubbing after shooting.
On the Audio 1 setting, the sound that was recorded while shooting is used.
On the Audio 2 setting, the over-dubbed sound is used.



Auto Chapter

When recording, chapter markers are put in at the specified interval. You can set this interval to 5 minutes, 10 minutes, or 15 minutes. If you select None, it switches automatic chapter marking off, no separations.



Disc

Initialize

If you load a completely blank disc, the "Initialize" menu will appear. Select "Ok" then press ENTER. The Recorder will initialize the disc.

DVD-R: The Recorder initializes the disc for Video mode. The recording mode will always be Video mode.

DVD-RW: The Recorder initializes the disc for VR mode.

DVD+R/ DVD+RW: The Recorder initializes the disc.

Also, you can format the disc from the Setup menu as below.



1 **Press SETUP.**
The Setup menu appears.

2 **Use ▲ / ▼ to select the Disc option.**

3 **While the Disc option is selected, press ► to move to the second level.**

4 **Use ▲ / ▼ to select the Initialize option.**

5 **Press ► to move to the third level.**
"Start" icon is highlighted.

6 **Press ENTER.**
Initialize menu appears.

7 **For DVD-RWs, use ◄ / ► to select a mode (DVD-VR or DVD-VIDEO) then press ENTER. For DVD+RWs, go to step 8.**



8 **Use ◄ / ► to select "Ok" then press ENTER.**
It takes a few moments to format the disc.

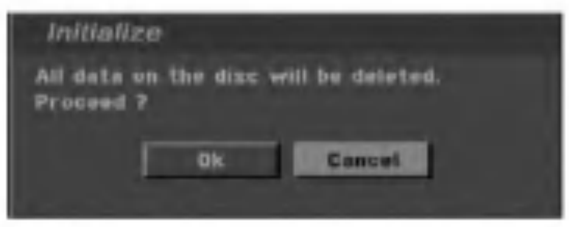

⚠**Caution**

If you want to change the disc format, everything recorded on the disc will be erased.

Disc Protect

When recording in DVD+RW / +R disc or VR mode formatted DVD-RW disc, set to ON to prevent accidental recording, editing or deleting of the disc loaded. If you need to unlock the disc to make edits, select OFF.



Finalize

Finalizing 'fixes' the recordings in place so that the disc can be played on a regular DVD player or computer equipped with a suitable DVD-ROM drive.
Finalizing a Video mode disc creates a menu for navigating the disc. This is accessed by pressing MENU/LIST or TITLE.

⚠Caution

After you've finalized a disc recording on a DVD-R, DVD-RW, or a DVD+R disc, you can't edit or record anything else on that disc except on a DVD+RW disc.



1 **Follow steps 1-3 as shown on page 30 (Initialize).**

2 **Use ▲ / ▼ to select the Finalize option.**

3 **Press ► to move to the third level.**
Finalize is highlighted.

4 **Press ENTER.**
Finalize menu appears.



5 **Select "Ok" then press ENTER.**
The recorder starts finalizing the disc.

Note :

How long finalization takes depends on the type of disc, how much is recorded on the disc, and the number of titles on the disc. A heavily recorded disc can take up to 4 minutes or more to finalize.

Tip

If you load a DVD-RW that has already been finalized, you can 'unfinalize' it by choosing Unfinalize from the Finalize menu. After doing this, you can edit and re-record onto the disc.

Disc Label

Use this to enter a name for the disc. This name appears when you load the disc and when you display disc information on-screen.

- The disc name can be up to 32 characters long.
- For discs formatted on a different DVD Recorder Receiver, you will see only a limited number of characters.



1 **Follow steps 1-3 as shown Initialize on page 30.**

2 **Use ▲ / ▼ to select the Disc Label option.**

3 **Press ► to move to the third level.**
"Edit" icon is highlighted.

4 **Press ENTER.**
Keyboard menu appears.



5 **Enter a name for the disc. Use ▲ ▼ ◄ ► to select a character then press ENTER to confirm your selection.**

- **Alphabet Capital:** Switches the keyboard to upper case characters.
- **Alphabet Small:** Switches the keyboard to lower case characters.
- **Symbols:** Switches the keyboard to symbol characters.
- **OK:** Select to finish.
- **Cancel:** Select to exit the menu.
- **Space:** Inserts a space at the cursor position.
- **Delete:** Deletes the previous character at the cursor position.
- **◄ / ►:** Moves cursor to left or right.

6 **Choose OK then press ENTER to save the name and return to the Setup menu.**

7 **Press SETUP to exit the menu.**

Overview for the On-Screen Display

This manual gives basic instructions for operating the DVD Recorder Receiver. Some DVDs require specific operation or allow only limited operation during play-back. When this occurs, the symbol ⃠ appears on the TV screen, indicating that the operation is not permitted by the DVD Recorder Receiver or is not available on the disc.

Displaying Information While Watching TV

While viewing the TV channels, press ENTER to display the information displayed on-screen.

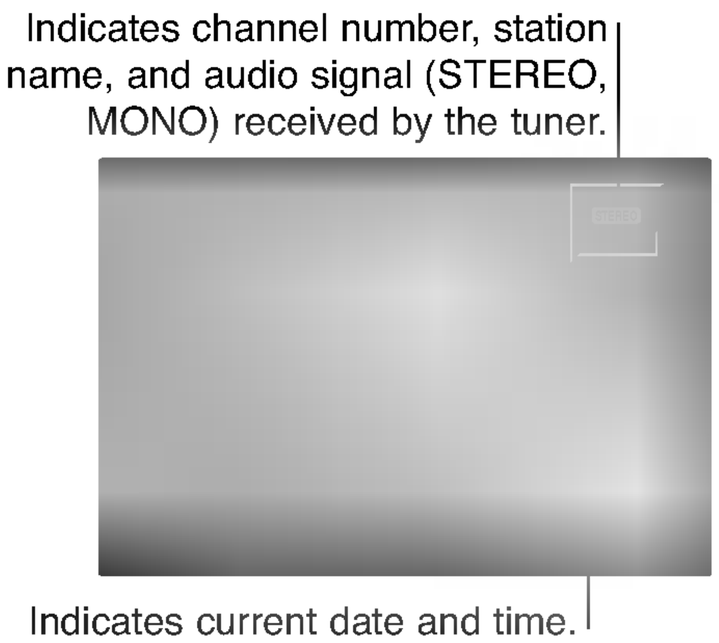

Disc Information On-screen Display

You can display various information about the disc loaded on-screen.

1 Press DISPLAY repeatedly to display/change the information displayed on-screen.

2 To remove the On-Screen Display, press DISPLAY repeatedly until it disappears.

See the descriptions on the following pages for detailed explanations of displays as a disc is playing.

Recorder Status Icon Displays

▬ Resume play from this point

⃠ Action prohibited or not available

Notes :

- Some discs may not provide all of the features on the On-Screen Display, examples shown the below.
- If no button is pressed for 10 seconds, the On-Screen Display will disappear.

Menu Options		**Function** (Use ▲ / ▼ to select desired option)	**Selection Method**
Title Number		**Shows the current title number and total number of titles, and** skips to the desired title number.	◄ / ►, or Numbers, ENTER
Chapter Number		**Shows the current chapter number and total number of chapters, and** skips to the desired chapter number.	◄ / ►, or Numbers, ENTER
Time Search		**Shows the elapsed playing time, and** searches the point by the elapsed time directly.	Numbers, ENTER
Audio Language (DVD only) and Digital Audio Output Mode	D 2CH	**Shows the current audio soundtrack language, encoding method, and channel number, and** changes the setting.	◄ / ►
Subtitle Language		**Shows the current subtitles language, and** changes the setting.	◄ / ►
Angle		**Shows the current angle number, total number of angles, and** changes the angle number.	◄ / ►

Menu Options		**Function** (Use ▲ / ▼ to select desired option)	**Selection Method**
Track Number		**Shows the current track number and total number of tracks or PBC On mode, and** skip to the desired track number.	◄ / ►, or Numbers, ENTER
Time		**Shows the elapsed playing time, and** searches the point by the elapsed time directly.	Numbers, ENTER
Audio Channel		**Shows the audio channel, and** changes the audio channel.	◄ / ►

DVD and Video CD Operation

DVD or Video CD Playback

Playback Setup

- Turn the TV on and select the video input source connected to the DVD Recorder Receiver.
- Audio System: Turn the Audio System on and select the input source connected to the DVD Recorder Receiver.

1 Press OPEN/CLOSE (⏏) to open the disc tray.

2 Load your chosen disc in the tray, with the playback side down.

3 Press OPEN/CLOSE (⏏) to close the tray.
READING appears on the display window, and playback starts automatically. If playback does not start, press ► (PLAY).
In some cases, the disc menu might appear instead.

Tip

If a menu is displayed

A menu may be displayed first after loading a DVD or Video CD that contains a menu.

[redacted]

Use the ◄ ► ▲ ▼ buttons to select the title/chapter you want to view, then press ENTER to start playback. Press TITLE or MENU/LIST to return to the menu display.

[redacted]

- Use the number buttons to select the track you want to view.
  Press RETURN (↶) to return to the menu display.
- Menu setting and the exact operating procedures for using the menu may differ depending on the disc. Follow the instructions on each menu screen.
  You may also set PBC to OFF in the Setup menu.
  See page 26.

Notes :

– If Parental Control is set and the disc is not within the Rating settings (not authorized), the 4-digit code must be entered and/or the disc must be authorized (see “Rating”, on page 27).
– DVDs may have a Region Code.
Your recorder will not play discs that have a region code different from your recorder. The region code for this Recorder is 4 (four).

General Features

Note :

Unless stated otherwise, all operations described use the Remote Control. Some features may also be available on the Setup menu.

TITLE Selection

[redacted]

If a disc has more than one title, you can move to another title as follows:

- Press DISPLAY then use ▲ / ▼ to select the title icon. Then, press the appropriate numbered button (0-9) or ◄ / ► to select a title number.

CHAPTER/TRACK Selection

If a title on a disc has more than one chapter/track, you can move to another chapter/track as follows:

- Press SKIP (I◄◄ or ►►I) briefly during playback to select the next chapter/track or to return to the beginning of the current chapter/track.
- Press SKIP (I◄◄) twice briefly to step back to the previous chapter/track.
- To go directly to any chapter/track during playback, press DISPLAY. Then, use ▲ / ▼ to select chapter icon (or for a Video CD, select track icon). Then, enter the chapter/track number using the numbered buttons (0-9) or press ◄ / ►.

Search

1. Press SCAN (◄◄ or ►►) during playback.
2. Press SCAN (◄◄ or ►►) repeatedly to select the required speed.
   DVD, DivX; 4 steps (forward and backward)
   Video CD; 3 steps (forward and backward)
3. To exit SEARCH mode, press ► (PLAY).

Still Picture and Frame-by-Frame Playback

1. Press PAUSE/STEP (❚❚) on the remote control during playback. Advance the picture frame-by-frame by pressing PAUSE/STEP (❚❚) repeatedly.
2. To exit PAUSE mode, press ► (PLAY).

General Features (Continued)

Slow Motion

1. Press PAUSE/STEP (❚❚) during playback.
   The Recorder will enter PAUSE mode.
2. Press SCAN (◀◀ or ▶▶) during PAUSE mode.
   The DVD Recorder Receiver will enter SLOW mode.
3. Use the SCAN (◀◀ or ▶▶) to select the required speed.
   DVD; 4 steps (forward and backward)
   DivX; 4 steps (forward only)
   Video CD; 3 steps (forward only)
4. To exit Slow Motion mode, press ▶ (PLAY).

Note :

Slow motion playback in reverse is not possible with Video CDs.

Repeat

DVD Discs - Repeat Chapter/Title/Off

Press REPEAT to select a desired repeat mode.
- Chapter: repeats the current chapter.
- Title: repeats the current title .
- Off: does not play repeatedly.

Video CDs, DivX - Repeat Track/All/Off

Press REPEAT to select a desired repeat mode.
- Track: repeats the current track.
- All: repeats the all tracks on the Video CD or in the folder (DivX disc).
- Off: does not play repeatedly.

Note :

On a Video CD with PBC, you must set PBC to OFF in the Setup menu to use the Repeat function. See page 26.

Repeat A-B

To repeat a sequence in a title:

1. Press A-B at your chosen starting point.
   Repeat icon and 'A-' appears on the TV screen.
2. Press A-B again at your chosen ending point.
   Repeat icon and 'A-B' appears on the TV screen, and the repeat sequence begins.
3. To cancel the sequence, press A-B repeatedly to select Off.

Time Search

The Time Search function allows you to start playback at any chosen time on the disc.

1. Press DISPLAY during playback. The On-Screen Display appears on the TV screen.
   The Time Search box shows the elapsed playing time of the current disc.
2. Within 10 seconds, use ▲ / ▼ to select the Time Search icon in the On-Screen Display.
   The "--:--:--" display appears in the Time Search box.
3. Within 10 seconds, use the number buttons to enter the required start time. Enter hours, minutes, and seconds from left to right in the box.
   You can not enter an invalid time.
   If you enter the wrong numbers, press CLEAR. Then enter the correct numbers.
4 Within 3 seconds, press ENTER to confirm the start time.
   Playback starts from the selected time on the disc.

Zoom

The Zoom function allows you to enlarge the video image and to move through the enlarged image.

1. Press ZOOM during playback or still playback to activate the Zoom function.
   Each press of the ZOOM button changes the TV display in the sequence shown below.
   x2 size → x4 size → normal size
2. Use the ◀ ▶ ▲ ▼ buttons to move through the zoomed picture.
3. To resume normal playback, press CLEAR or press ZOOM repeatedly until the normal picture appears.

Note :

The Zoom function may not work for some DVDs.

General Features (Continued)

Marker Search

You can start playback from a memorized point. Up to nine points can be memorized.
To enter a mark, follow these steps.

1. During disc playback, press MARKER when playback reaches the spot that you want to memorize.
   The Marker icon will appear on the TV screen briefly.
2. Repeat step 1 to enter up to nine Marker points on a disc.

To Recall or Clear a Marked Scene

1. During disc playback, press SEARCH.
   The Marker Search menu will appear on the TV screen.
2. Within 10 seconds, use ◄ / ► to select the marker number that you want to recall or clear.
3. Press ENTER and playback starts from the marked scene. Or, Press CLEAR and the marker number is erased from the list.
4. You can play any marker by inputting its number on the marker search menu.

Reviewing the Contents of DVD Video Discs: Menus

DVDs may contain menus that allow you to access special features. To open the disc menu, press MENU/LIST. Then, press the appropriate number button to select an option. Or, use the ◄ ► ▲ ▼ buttons to highlight your selection, then press ENTER.

Title Menu

1. Press TITLE.
   If the current title has a menu, the menu will appear on the TV screen. Otherwise, the disc menu may appear.
2. The menu may contain camera angles, spoken language and subtitle options, and chapters for the title.

Disc Menu

1. Press MENU/LIST.
   The disc menu is displayed.
2. To remove the disc menu, press MENU/LIST again.

Camera Angle

If the disc contains sequences recorded from different camera angles, the angle icon appears briefly on the TV screen. You can then change the camera angle if you wish.

1. Press DISPLAY during playback. The On-Screen Display appears on the TV screen.
2. Use ▲ / ▼ to select the Angle icon in the On-Screen Display.
3. Use ◄ / ► to select the desired angle.
   The number of the current angle appears on the TV screen.

Changing the Audio Soundtrack

Press AUDIO then press ◄ / ► repeatedly during playback to hear a different audio language (DVD only) or audio soundtrack if available.

Audio Channel Selection

Press AUDIO then press ◄ / ► repeatedly during playback to hear a different audio channel (STEREO, LEFT or RIGHT).
With DVD-RW discs recorded in VR mode that have both a main and a Bilingual audio channel, you can switch among Main (L), Sub (R), Main+sub (L+R), or Mono by pressing AUDIO.

Note :
The Audio Channel Selection will operate when the Dolby Digital is set to PCM mode in the Setup menu (refer to “Audio” on page 26).

Subtitles

Press SUBTITLE then press ◄ / ► repeatedly during playback to see the different subtitle languages.

Instant Skip

Each press INSTANT SKIP skips forward 15 seconds.

Note :

If ⃠ appears, the feature is not available on the disc.

Last Condition Memory

This Recorder memorizes the user settings for the last disc that you have viewed. Settings remain in memory even if you remove the disc from the Recorder or switch off the Recorder. If you load a disc that had its settings memorized, the latest stop position is automatically recalled.

Notes :

– Settings are stored in memory for use any time.
– This Recorder does not memorize settings for a disc if you switch off the Recorder before commencing to play the disc.

PIP (Picture-in-Picture)

This function enables you to view the stored stations in the sub picture during playback.

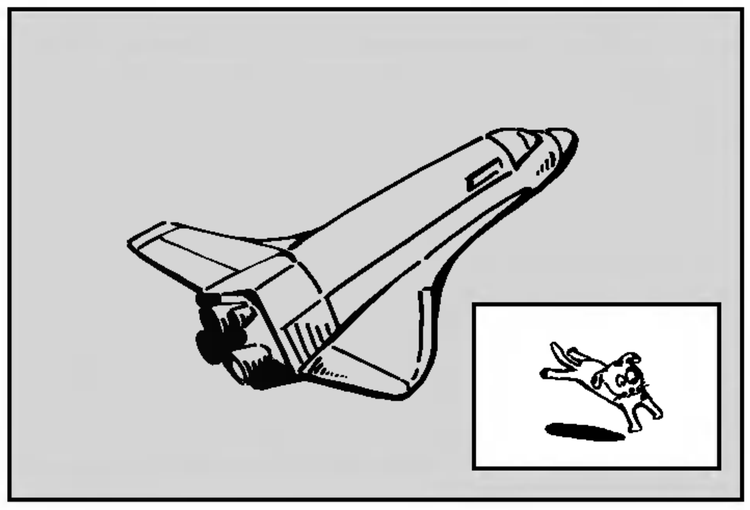

Turning PIP On and Off

Press PIP to switch on the sub picture, press PIP again to switch it off.

Input source selection for sub picture

Press AV to select the input source for the sub picture. Each time AV is pressed, each input source available for the sub picture is displayed as shown below.
Tuner → AV1 → OPT → AV2 → DV

Program selection for sub picture

Use PR (▲ / ▼) to change the program if sub picture's input source is Tuner. The selected program number is displayed on the TV screen. You can display the selected program by pressing STOP (■).

Sub picture position change

Press ◄ / ► repeatedly until desired position is achieved. The sub picture moves clockwise or counterclockwise.

Playing a DivX Movie Disc

Using this DVD Recorder Receiver you can play back DivX files on the CD-R/RW or DVD±R/RW. Before playing DivX files, read “About DivX movie files” on the right.

1 Insert a disc and close the tray. The MOVIE menu appears on the TV screen.

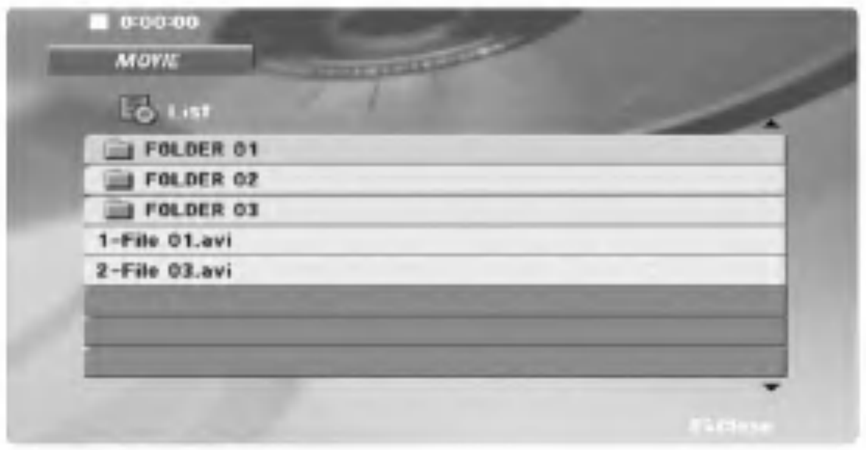

2 Press ▲ / ▼ to select a folder, and press ENTER. A list of files in the folder appears. If you are in a file list and want to return to the Folder list, use ▲ / ▼ buttons on the remote to highlight 🗀_ and press ENTER.

3 If you want to view a particular file, press ▲ / ▼ to highlight a file and press ENTER or PLAY.

4 Press STOP to exit.

Tip:

- On a disc with mixed content (MP3/WMA, JPEG, and DivX files), you can select menu screen. Press TITLE and a word on top on the menu is highlighted. Then, use ◄ / ► to select MP3/WMA, JPEG, or MOVIE then press ENTER.
- You can view TV channel or video input source by pressing RETURN (↶). If you want to return to the menu, press MENU/LIST.

Notice for displaying the DivX subtitle

Please refer to following notice when the DivX subtitle does not display properly.

1. Find a suitable Disc Subtitle language for the DivX subtitle on the figure below.

Disc Subtitle Language	Available DivX Subtitle
Original, English	English
French, German, Italian, Spanish, Portuguese	French, German, Italian, Spanish, Portuguese Dutch, Swedish
Russian	Russian
Other 6976	Greek
Other 7665	Polish, Hungarian, Czech
Other 8482	Turkish

2. Press SETUP. The Setup menu appears.
   Press SETUP ➡ [LANGUAGE] ➡ [Disc Subtitle] then select the language you have found.
   Refer to “Disc Menu/Audio/Subtitle” on page 26.

Tip:

If the subtitle still does not display properly after the steps 1-2 proceeded, press and hold SUBTITLE about 3 seconds during playback.
The new language code number selected is displayed on upper-right of the TV screen.

Language code change sequency for Hungarian, Czech and Polish:
LANGUAGE 1 ➡ LANGUAGE 2

Language code change sequency for Russian:
LANGUAGE 1 ➡ LANGUAGE 2 ➡ LANGUAGE 3

About DivX movie files

DivX disc compatibility with this recorder is limited as follows:

- Available resolution size of the DivX file is under 720x576 (W x H) pixel.
- The file name of the DivX subtitle is available by 47 characters.
- If there is impossible code to express in the DivX file, it may be displayed as “ _ ” mark on the display.
- If the number of the screen frame is over 30 per 1 second, this unit may not operate normally.
- If the video and audio structure of recorded file is not interleaved, either video or audio is outputted.
- This recorder does not support GMC.
- Playable DivX file: “.avi”, “.divx”
- Playable DivX subtitle: “.smi”, “.srt”, “.sub (Micro DVD, Subviewer 1-2 format only)”, “.txt (Micro DVD, T1-4 format only)”
  Divx subtitle except those listed above is not displayed on the TV screen.
- Playable Codec format: “DIVX3.xx”, “DIVX4.xx”, “DIVX5.xx”, “XVID “, “3IVX”.
- Playable Audio format: “Dolby Digital”, “PCM”, “MP3”, “DTS (DIGITAL OUT only)”
- Sampling frequency: within 8 - 48 kHz (MP3)
- Bit rate: within 32 - 320kbps (MP3)

Audio CD and MP3/WMA Operation

Playing an Audio CD or MP3/WMA file

Using this DVD Recorder Receiver you can play back MP3/WMA files on the CD-R/RW or DVD±R/RW. Before playing MP3/WMA files, read “Notes on MP3/WMA Recordings” on the right.

Audio CD

Once you insert an audio CD a menu appears on TV screen. Press ▲ / ▼ to select a track then press ► (PLAY) or ENTER and playback starts.

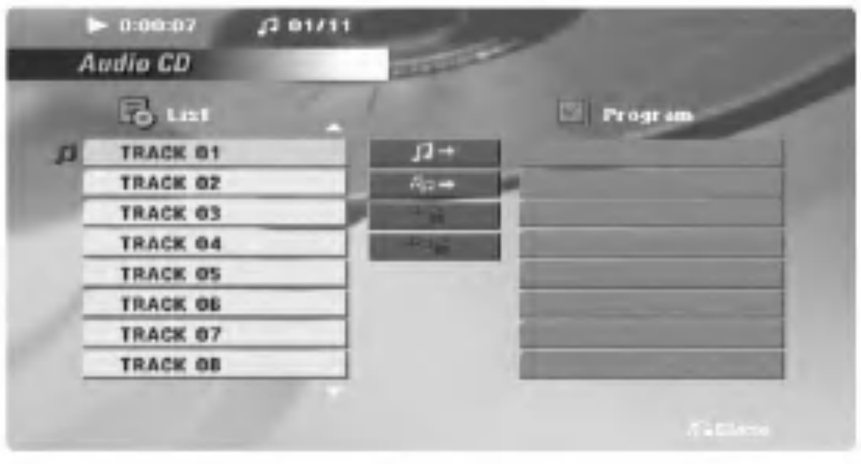

MP3 / WMA

1. Press ▲ / ▼ to select a folder, and press ENTER to see the folder contents.
2. Press ▲ / ▼ to select a track then press ► (PLAY) or ENTER. Playback starts.

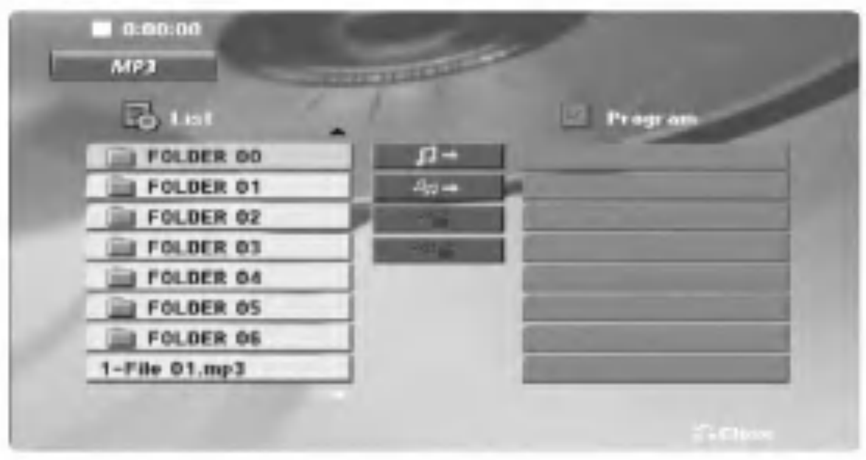

Tips

- If you are in a file list and want to return to the Folder list, use the ▲/▼ to highlight ■.. and press ENTER to return to the previous menu screen.
- Press and hold ▲ / ▼ to go to the next / previous page.
- On a disc with mixed content (MP3/WMA, JPEG, and DivX files), you can select menu screen. Press TITLE and a word on top on the menu is highlighted. Then, use ◄ / ► to select MP3/WMA, JPEG, or DivX then press ENTER.
- You can view TV channel or video input source by pressing RETURN (↶). If you want to return to the menu, press MENU/LIST.

Notes on MP3/WMA Recordings

MP3 / WMA disc compatibility with this player is limited as follows:

- Sampling frequency: within 32 - 48 kHz (MP3), within 32 - 48kHz (WMA)
- Bit rate: within 32 - 320kbps (MP3), 32 - 192kbps (WMA)
- The recorder cannot read an MP3/WMA file that has a file extension other than “.mp3” / “.wma”.
- CD-R physical format should be ISO 9660
- If you record MP3 / WMA files using software that cannot create a file system (eg. Direct-CD) it is impossible to playback MP3 / WMA files. We recommend that you use Easy-CD Creator, which creates an ISO 9660 file system.
- File names should have a maximum of 8 letters and must incorporate an .mp3 or .wma extension.
- They should not contain special letters such as / ? * : “ < > | etc.
- The total number of files on the disc should be less than 999.

This DVD Recorder Receiver requires discs and recordings to meet certain technical standards in order to achieve optimal playback quality. Pre-recorded DVDs are automatically set to these standards. There are many different types of recordable disc formats (including CD-R containing MP3 or WMA files) and these require compatible playback.

Customers should note that permission is required in order to download MP3 / WMA files and music from the Internet. Our company has no right to grant such permission. Permission should always be sought from the copyright owner.

Pause

1. Press PAUSE/STEP (❚❚) during playback.
2. To return to playback, press ► (PLAY) or press PAUSE/STEP (❚❚) again.

Track Selection

- Press SKIP ⏮ or ⏭ briefly during playback to go to the next track or to return to the beginning of the current track.
- Press SKIP ⏮ twice briefly to step back to the previous track.
- On an Audio CD, to go directly to any track, enter the track number using the numbered buttons (0-9) during playback on the Track List.

Repeat Track/All/Off

Press REPEAT to select a desired repeat mode.

- TRACK: repeats the current track.
- ALL : repeats the all tracks on the disc.
- OFF (No display): does not play repeatedly.

Search

1. Press SCAN (◄◄ or ►►) during playback.
   The Recorder will enter SEARCH mode.
2. Press SCAN (◄◄ or ►►) to select the required speed: ◄◄X2, ◄◄X4, ◄◄X8 (backward) or ►►X2, ►►X4, ►►X8 (forward).
   Search speed and direction are indicated on the menu
   display.
3. To exit SEARCH mode, press ► (PLAY).

Repeat A-B

To repeat a sequence in a track:

1. Press A-B at your chosen starting point.
   Repeat icon and 'A' appears on the menu screen.
2. Press A-B again at your chosen ending point.
   The Repeat icon and 'A - B' appears on the menu screen, and the repeat sequence begins.
3. To exit the sequence and return to normal play, press A-B again.
   The Repeat icon disappears from the menu screen.

Programmed Playback

The program function enables you to store your favorite tracks from any disc in the recorder's memory. A program can contain 99 tracks (Audio CD) or 256 tracks (MP3/WMA).

1. Insert a disc.
   Audio CD and MP3/WMA Discs:
   Audio CD or MP3/WMA menu appears.
2. Select a track on the List.
3. Select " ♪→ " icon then press ENTER to place the selected track on the Program list. Repeat to place additional tracks on the list.

   You can add all tracks in the disc. Select " ♪→ " icon then press ENTER.
4. Select the track you want to start playing on the Program list. Press and hold ▲ / ▼ to move to the next / previous page.



Example) Audio CD

5. Press ► (PLAY) or ENTER to start. Playback begins in the order in which you programmed the tracks. Playback stops after all of the tracks on the Program list have played once.

Repeat Programmed Tracks

You can play a track/all on a disc.

1. Press REPEAT when playing a disc. The repeat icon appears.
2. Press REPEAT to select a desired repeat mode.

   • TRACK: repeats the current track
   • ALL: repeats all the tracks on programmed list.
   • Off(No display): does not play repeatedly.

Note :

If you press SKIP (►►I) once during Repeat Track playback, the repeat playback cancels.

Erasing a Track from Program List

1. Use ▲ ▼ ◄ ► to select the track that you wish to erase from the Program list.
2. Press CLEAR. Or, select " ♪🗑 " icon then press ENTER to erase the selected track on the Program list. Repeat to erase additional tracks on the list.

Erasing the Complete Program List

Select " ♪🗑 ", then press ENTER. The complete Program for the disc is erased.

Note:

The programs are also cleared when the disc is removed.

JPEG File Operation

Viewing a JPEG file

Using this DVD Recorder Receiver you can view JPEG files on the CD-R/RW or DVD±R/RW. Before playing JPEG files, read "Notes on JPEG Recordings" on the right.

1. Insert a disc and close the tray. The JPEG menu appears on the TV screen.



2. Press ▲ / ▼ to select a folder, then press ENTER. A list of files in the folder appears. If you are in a file list and want to return to the previous Folder list, use the ▲ / ▼ buttons on the remote to highlight 🗀.. then press ENTER.

3. If you want to view a particular file, press ▲ / ▼ to highlight a file then press ENTER or ► (PLAY). The selected image is displayed in full screen.



Press ENTER to appear or disappear this menu.

4. To stop viewing at any time, press STOP. The menu screen appears.

Tip:

- If you are in a file list and want to return to the Folder list, use the ▲/▼ to highlight 🗀.. and press ENTER to return to the previous menu screen.
- Press and hold ▲ / ▼ to go to the next / previous page.
- On a disc with mixed content (MP3/WMA, JPEG, and DivX files), you can select menu screen. Press TITLE and a word on top on the menu is highlighted. Then, use ◄ / ► to select MP3/WMA, JPEG, or DivX then press ENTER.
- You can view TV channel or video input source by pressing RETURN (↶). If you want to return to the menu, press MENU/LIST.

Notes on JPEG Recordings

- Depending upon the size and number of JPEG files, it could take a long time for the DVD Recorder Receiver to read the disc's contents. If you don't see an on-screen display after several minutes, some of the files may be too large — reduce the resolution of the JPEG files to less than 5M pixels as 2760 x 2048 pixels and burn another disc.
- The total number of files and folders on the disc should be less than 999.
- Some discs may be incompatible due to a different recording format or the condition of disc.
- Ensure that all the selected files have the ".jpg" extensions when copying into the CD layout.
- If the files have ".jpe" or ".jpeg" extensions, please rename them as ".jpg" file.
- File names without ".jpg" extension will not be able to be read by this DVD Recorder Receiver. Even though the files are shown as JPEG image files in Windows Explorer.

JPEG File Operation (Continued)

Slide Show

Use ▲ ▼ ◄ ► to highlight the (Slide Show) on the JPEG menu then press ENTER.
Slide Show starts from the selected file if Speed option is not II (Off). While viewing a file, you can press STOP to move to the previous menu (JPEG menu).

- There are four Slide Speed options ( ) : >>> (Fast), >> (Normal), > (Slow) and II (Off).
  Use ▲ ▼ ◄ ► to highlight the Speed options ( ). Then, use ◄ / ► to select the option you want to use then press ENTER.

Still Picture

1. Press PAUSE/STEP during slide show.
   The recorder will now go into PAUSE mode.
2. To return to the slide show, press ► (PLAY) or press PAUSE/STEP again.

Moving to another File

Press SKIP (I◄◄ or ►►I) or cursor (◄ or ►) once while viewing a picture to advance to the next or previous file.

To rotate picture

Press ▲ / ▼ during showing a picture to rotate the picture clockwise or counter clockwise.

Zoom

Use ZOOM to enlarge the photo image. (see 34 page)

To listen to music while slide show simultaneously

You can display photo files while listening to MP3/WMA music files recorded on a disc.
Select icon then press ENTER on the JPEG menu.

Basic Recording from TV channels

Follow the instructions below to record a TV program. Recording starts immediately and continues until the disc is full or you stop the recording.

1 **Switch on the recorder and load a recordable disc.**
Also make sure that the TV's input source is set to this recorder. If you load a completely blank disc, the recorder takes a short while to initialize the disc.

2 **Set a recording mode as necessary by pressing REC MODE repeatedly. (HQ, SQ, LQ, EQ)**
HQ; High Quality, SQ; Standard Quality,
LQ: Low Quality, EQ: Extended Quality

3 **Use PR (+/-) buttons to select the TV channel to record.**

Changing TV Audio Channel
You can select the audio channel (language) to listen by pressing AUDIO during viewing TV program. The current audio channel is displayed on-screen.
Stereo or mono broadcast: Stereo → Left → Right
Bilingual broadcast: Main+Sub → Main → Sub

- If the sound is of poor quality when set to Stereo, you can often improve it by changing to Mono (Left or Right).

4 **Press REC (●) once.**
Recording will start. (The REC indicator lights in the display window.)
- Recording continues until you press STOP (■) or the disc is full.
- To record for a fixed length of time, see Instant Timer Recording on right.

5 **Press STOP (■) to stop recording.**

To Pause the Recording

1. Press PAUSE/STEP (❚❚) to pause the disc during recording.
2. When you want to continue recording, press PAUSE/STEP (❚❚).

To record one TV program while watching another

1 Press TV/DVD to select the TV mode during recording. The TV indicator appears in the display window.
2 Using the TV, select the channel to be viewed.

Instant Timer Recording

Instant Timer Recording allows you to make a recording easily of a preset length without using the program timer.

1 **Follow steps 1-4 as shown left (Basic Recording from a TV channels).**

2 **Press REC (●) repeatedly to select the recording time length.**
Recording starts after the first press. Each additional press increases the recording time by 10 minutes within the available free space.
The recording time is displayed on the TV screen.
At the end of the recording, the DVD Recorder Receiver will stop recording and shut off.

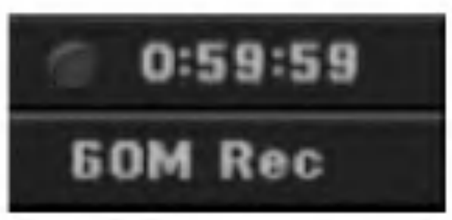

Instant Timer Recording Menu

Checking the Recording Time

Press REC (●) once to check the recording time. The remaining time will be displayed on the TV screen for a moment.

To Extend the Recording Time

The recording time can be extended anytime by pressing REC (●).
Each additional press increases the recording time by 10 minutes within the available free space.

⚠Caution
If the Recorder is unplugged (or there is a power failure) while the Recorder is recording, the recording will be lost.

Timer Recording

This DVD Recorder Receiver can be programmed to record up to 7 programs over a period of 1 month. For unattended recording, the timer needs to be set with the channels to be recorded, the starting time and length.

Note:
If you use a completely blank disc for timer recording, you must format the disc before starting timer recording. (Refer to "Initialize" on page 30.)

1 Press TIMER REC.
The Timer Record menu will appear.



- **PR** – Choose a memorized program number, or one of the external inputs from which to record.
- **Date** – Choose a date up to 1 month in advance.
- **Start Time** – Set the recording starting time.
- **End Time** – Set the recording ending time.
- **Mode** – Choose a record mode (HQ, SQ, LQ, EQ, or AT).
  AT (Auto) mode determines how much disc time is available and switches record mode, if necessary, to complete recording the program.
- **Repeat** – Choose a desired repeat (Once, Daily (Monday - Friday), or Weekly).

2 Enter the necessary information for your timer recording(s).

- ◄ / ► (left/right) – moves the cursor left/right
- ▲ / ▼ (up/down) – changes the setting at the current cursor position
- Press RETURN (↶) to exit the Timer Record menu.
- Press ENTER after filling in all the program information.
- Press TIMER REC to display Timer Record List.

3 Press ENTER, the program will be memorized by the DVD Recorder Receiver.
To check the programming, the Timer Record List will appear.
Check field's "Rec. OK" on the Timer Record List indicates that the timer recording is programmed correctly and a recordable disc is inserted.

4 Press RETURN (↶) to exit the Program List.

5 Make sure that you load a recordable disc and press POWER to switch your unit to Standby.

Notes :

- The timer indicator lights in the display window if the Recorder is in standby with the timer active.
- You must press POWER to stop the timer recording.
- There is a short delay when a timer recording finishes to confirm the recorded program. If two timer recordings are set to record sequentially (one right after the other), the very beginning of the later program may not be recorded.

Timer Recording (Continued)

Timer Recording with G-CODE® System

This system makes programming timer recordings very simple. Most TV guides publish G-CODE programming numbers with their program details.If you want to make a timer recording of a program, you just input the corresponding G-CODE programming number. The date, start, stop and channel settings are made automatically. All you have to do is tell the recorder the recording mode and quality, and whether it's a once-only recording, or a regular recording.
Up to 7 timer programs can be stored in the recorder.

1 Press G-CODE.
The G-CODE menu will appear.
Press G-CODE again to exit the menu.



- **Number** – Enter the G-CODE programming number.
- **Repeat** – Choose a desired repeat (Once, Daily, or Weekly).

2 Use the number buttons then press ENTER to enter the G-code programming number.
To check the programming, the Timer Record menu will appear.
- ◄ / ► (left/right) – move the cursor left/right
- If you make a mistake before pressing ENTER, press CLEAR repeatedly to delete password numbers one by one then correct it.

3 Use ◄ / ► to move the cursor to the Repeat column then use ▲ / ▼ to select Repeat option (Once, Daily (Monday - Friday), or Weekly).

4 Press ENTER after filling in all the program information.
The Timer Recorder menu will appear. You can change the settings as required (Mode, etc.)

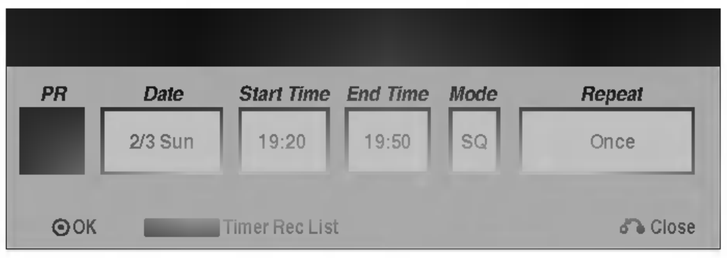

5 Follow steps 2-5 as shown on previous page (Timer Recorder).

Reviewing Timer Recording Details

Programming can be checked whenever the DVD Recorder Receiver is turned on. Press TIMER REC twice.
- Use ▲ / ▼ to select a timer recording.
- Press **ENTER** to edit the selected program. Timer Record menu appears.
- Press **CLEAR** to remove the selected program from the Timer Record List.



Canceling a Timer Recording

You can clear a timer setting anytime before the recording actually starts.
- Use ▲ / ▼ to select a program you want to remove on the Timer Recorder List. If you want to remove the program, press CLEAR.
  The confirm message will appear. use ◄/► to select "Ok" then press ENTER.

Stopping a Timer Recording in Progress

After a timer recording has started, you can still cancel the program.
- Press POWER.

Timer Recording Troubleshooting

Even though the timer is set, the Recorder will not record when:
- There is no disc loaded.
- A non-recordable disc is loaded.
- Disc Protect is set to ON in the Setup menu (see page 30).
- Power is turned on.
- There are already 99 titles (DVD-R/RW), 49 titles (DVD+R/RW) recorded on the disc.

You cannot enter program for a timer recording if:
- A recording is already underway.
- The time you're trying to set has already passed.
- There are already 7 timer programs set.

If two or more timer programs overlap:
- The earlier program takes priority.
- After the earlier program finishes, the later program starts.
- If two programs are set to start at exactly the same time, the program entered first takes priority.

If the disc is damaged, the recording may not be completed successfully. In this case even though the Check field shows "Rec. OK", it may not be.

Recording from an External Input Source

Recording from External Components

You can record from an external A/V device, such as a camcorder or VCR, connected to any of the Recorder's external inputs.

1 Make sure that the component you want to record from is connected properly to the DVD Recorder Receiver. See pages 14-15.

2 Press AV repeatedly to select the external input to record from.
- Tuner: Built-in tuner
- AV1: AUDIO IN 1 / VIDEO IN 1 mounted on back panel
- AV2: AUDIO IN 2 / VIDEO IN 2 mounted on front panel
- DV: DV IN mounted on front panel

Note : AV3 Opt will not be recorded.

3 Load a recordable disc.

4 Select the recording mode as necessary by pressing REC MODE repeatedly. (HQ, SQ, LQ, EQ)
HQ; High Quality, SQ; Standard Quality, LQ: Low Quality, EQ: Extended Quality

5 Press REC (●) once.
Recording will start. (The REC indicator lights in the display window.)
- Recording continues until you press STOP (■) or the disc is full.
- To record for a fixed length of time, see Instant Timer Recording on page 43.

6 Press STOP (■) to stop recording.

Note :
If your source is copy-protected using CopyGuard, you will not be able to record it using this Recorder. See Copyright on page 9 for more details.

Recording from a Digital Camcorder

You can record from a digital camcorder connected to the DV IN port on the front panel of this Recorder. Using the Recorder's remote, you can control both the Camcorder and this Recorder.
Before recording, make sure that the audio input for the DV IN port is set up (see page 29).

Tips
- The source signal must be DVC-SD format.
- Some camcorders cannot be controlled using this Recorder's remote.
- If you connect a second DVD Recorder Receiver using a DV cable, you cannot control the second DVD from this one.
- You can't control this unit remotely from a component connected to the DV IN port.
- You can't record date and time information from a DV cassette.

1 Make sure your Digital Camcorder is connected to the front panel DV IN port. See page 15.

2 Check that the DV audio input is as you require.
You can choose between Audio 1 (original audio) and Audio 2 (over-dubbed audio).
- DV Input is set from the DV Rec Audio in sub-menu of the Setup menu. See DV Rec Audio on page 29 for more information.

3 Press AV repeatedly to select the DV input.
DV appears in the display window and on the TV screen.

4 Find the place on the Camcorder tape that you want to the recording to start from.
For best results, pause playback at the point from which you want to record.
- Depending on your Camcorder, you can use this Recorder's remote to control the Camcorder using the STOP, PLAY and PAUSE functions.

5 Press REC (●) once to start recording.

- Recording is automatically stopped if the Recorder detects no signal.
- You can pause or stop the recording by pressing PAUSE/STEP (❚❚) or STOP (■). You cannot control the Camcorder from this Remote Control during recording.
- In Video mode, the final frame of the recording may remain displayed on screen for a while after recording stops.
- For timer recording to work properly on this Recorder, the Digital Camcorder must also be switched on and be operating.

What is DV?

You can connect a DV-equipped camcorder to this recorder using a single DV cable for input and output of audio, video, data and control signals.

- This Recorder is only compatible with DV-format (DVC-SD) camcorders. **Digital Satellite Tuner, PCs, and D-VHS Video Recorders are not compatible.**
- You cannot connect more than one DV camcorder at a time to this Recorder.
- You cannot control this Recorder from external equipment connected via the DV IN port (including two DVD Recorders).
- It may not be possible to always control the connected Camcorder via the DV IN port.
- Digital Camcorders can usually record audio as stereo 16-bit/48kHz, or twin stereo tracks of 12-bit/32kHz. This Recorder can only record one stereo audio track. Set DV Rec Audio to Audio 1 or Audio 2 as required (see page 29).
- Audio input to the DV IN port should be 32 or 48kHz (not 44.1kHz).
- Picture disturbance on the recording may occur if the source component pauses playback or plays an unrecorded section of tape, or if the power fails in the source component, or the DV cable becomes disconnected.
- Although DV Rec Audio is set to Audio 2 and Audio 2 signal is not present, DV Rec Audio will be reset to Audio 1 automatically.

DV-Related Messages

You may see the following messages appear on your TV screen when using the DV IN port.

Not connected to Camcorder
The Camcorder is not connected properly, or the Camcorder is switched off.

Too many devices connected
The DV IN port on this Recorder supports connection to just one Camcorder.

Check the tape
There is no cassette loaded into the connected equipment.

Uncontrollable device
This Recorder cannot control the Camcorder.

Updating Information
Camcorder is updating information for DV.

Camera mode
Camcorder is set to camera mode.

Troubleshooting

If you can't get a picture and/or audio through the DV IN port, check the bullet points:

- Make sure the DV cable is properly connected.
- Try switching off the connected equipment then switching back on.
- Try switching the audio input.

Note :
Depending on the connected Camcorder, you may not be able to control it using the Remote Control supplied with this Recorder.

Title List and Chapter List Menu Overview

Using the Title List menu you can edit video content. The editing features available in the Title List menu depend on whether you are editing video on DVD, and whether you're editing Original content, or a Playlist.

There are two ways to edit VR mode DVD-RW discs. You can directly edit the Original content of the disc, or you can create and edit a Playlist. The Playlist doesn't actually change any of the content on the disc, but just controls how the content is played back.

1. Press MENU/LIST to display the Title List menu. Playback should be stopped when you do this.
   - When selecting titles, use the ▲ / ▼ buttons to display the previous/next page if there are more than six titles.
   - If you are editing a VR mode disc, press MENU/LIST to switch between Original and Playlist menu.

On the left side of the screen are the menu options. The main part of the screen shows thumbnails of the titles (or chapter) on the DVD. You can change these thumbnails using the THUMBNAIL button—see Changing Title Thumbnails on page 49.

Press DISPLAY to display the information of selected title on the Title List menu.

After selecting a title or chapter on the Title List or Chapter List menu, then press ENTER. The menu options appears on the left side of the menu. Use ▲ / ▼ to select a option then press ENTER to confirm your selection.

2. To exit the Title List menu, press RETURN (↶) repeatedly.

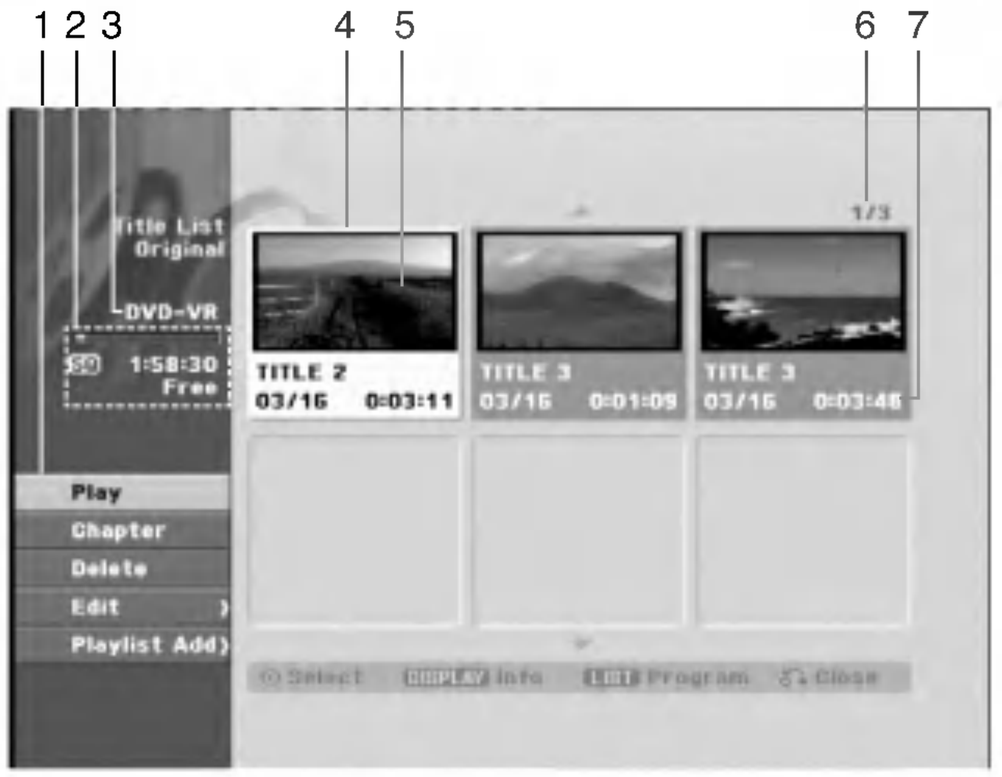

1. Menu options: To display menu option, select a title or chapter then press ENTER. The options displayed differ depending on the disc type.
   - [Chapter] Displays Chapter List of the title.
   - [Combine] Combines two chapters into one (page 52).
   - [Delete] Deletes the title or chapter. (page 51)
   - [Delete Part] Deletes a part of the Title (page 51).
   - [Divide] Divides a title into two (page 54).
   - [Full Play] Starts playback of the selected title including the hidden chapters.
   - [Hide (Show)] Hides (or Shows) the selected title or chapter. (page 54)
   - [Move] Moves a chapter on the Chapter List-Playlist menu to a position on the menu. (page 53)
   - [Play] Start playback of the selected title or chapter. The hidden titles and chapters on the DVD+R/RW cannot be play back.
   - [Playlist Add] Adds the title or chapter to the Playlist. (page 50)
   - [Protect] Protects accidental recording, editing or deleting of the title. (page 53)
   - [Title Name] Edits the title name. (page 52)
   - [Title] Displays Title List of the chapter.
2. Indicates the record mode, free space, and elapsed time progress bar.
3. Current media
4. Currently selected title.
5. Thumbnail
6. Shows the selected title number and total number of titles.
7. Shows the title name, recorded date, and recording length.

Title and Chapter Editing

Edits you make to the Original content change the actual content of the disc. For example, if you delete a title or chapter from the Original content (Title or Chapter), that title or chapter is deleted from the disc, freeing up extra recording time.
When you edit the Playlist, on the other hand, you are not changing the content of the disc. For example, when you delete a title from the Playlist, you are just telling the Recorder not to play that title; nothing is actually deleted from the disc.

Titles, Chapters, and Parts

Titles in the disc's original content contain one or more chapters. When you insert a title into the Playlist, all the chapters within that title also appear. In other words, chapters in the Playlist behave exactly as chapters on a DVD-Video disc do. Parts are sections of Original or Playlist titles. From the Original and Playlist menu, you can add or delete parts. Adding a chapter or title to the Playlist creates a new title made up of a section (ie., chapter) of an Original title. Deleting a part removes part of a title from the Original or Playlist menu.

⚠Caution

- When editing using the Delete, Add, or Move functions, the start and end frames may not be exactly as set in the starting and ending points display.
- During Playlist playback, you may notice a momentary pause between edits. This is not a malfunction.

Adding Chapter Markers

You can put a chapter marker anywhere in a Playlist or Original title during playback.
Once the chapter is marked, you can use the Chapter Search feature, as well as delete, combine and move chapters in the Chapter List-Original or Chapter List-Playlist menu.

Note :

Chapter markers are inserted at regular intervals automatically. You can change this interval from the Initial Setup menu (see Auto Chapter on page 29).

1 Play the title (Original or Playlist).

2 At the point you want to start a new chapter, press CHP ADD.
A chapter marker icon appears on the TV screen.
- You can also put chapter markers in while recording.

Changing Title Thumbnails

Each title displayed in the Title List menu is represented by a thumbnail picture taken from the start of that title or chapter.
If you prefer, select a different still picture from within a title.

1 Play the title (Original or Playlist).

2 Press THUMBNAIL to make the currently displayed picture the one that appears in the Original or Playlist menu.
The still picture that you choose appears in both the Original or Playlist menu.

Tip

You can also change the thumbnail picture of the title on the Chapter List-Original or Chapter List-Playlist menu. Select a chapter on the Chapter List-Original or Chapter List-Playlist menu, then press THUMBNAIL. The thumbnail picture of the title that includes the chapter is changed.

Making a New Playlist

Use this function to add an Original title or chapter to the Playlist. When you do this, the whole title is put into the Playlist (you can delete bits you don't need later — see Deleting a Title/Chapter on page 51).

The title appears in the Playlist complete with the chapter markers that appeared on the Original. However, if you add more chapter markers to the Original later, these are not automatically copied over into the Playlist title.

You can add up to 999 chapters to one disc . If you only want to add a chapter of a title, use the Adding a title/chapter to the Playlist on this page.

1 Choose a title or chapter on the Original menu to put into the Playlist, then press ENTER.
Original (Title or Chapter) options appear on the left side of the Original menu.

2 Use ▲ / ▼ to select 'Playlist' from Original options then press ENTER.



3 Select 'New Playlist' then press ENTER.
The new title appears in the updated Playlist. All chapters of the title are added to the Playlist.

Adding Additional Title/Chapters to the Playlist

You can add an Original title or chapter to a Playlist title even if it is already registered.

1 Choose an Original title or chapter to put into the Playlist, then press ENTER.
Original menu options appear on the left side of the screen.

2 Use ▲ / ▼ to select 'Playlist' from Original menu options then press ENTER.



3 Choose a Title List-Playlist that is already registered to insert a title or chapter, then press ENTER.
The title or chapter appears in the updated Playlist menu.

4 Repeat steps 1-3 to add additional title or chapter on the Playlist.

5 Press RETURN (↶) to exit, or MENU/LIST to go back to the Title List-Original menu.

Title and Chapter Editing (Continued)

Deleting a Title/Chapter

If you erase a title or chapter from the Playlist menu on DVD-RW discs formatted in VR mode, you only remove it from the Playlist; the title/chapter remains in the Original menu.

If you choose to delete a title or chapter from Title List or Chapter List menu, the title or chapter is actually deleted from the disc and the remaining time available for recording increases. Titles/chapters deleted from the Original are also removed from the Playlist.

Note :
It may not be possible to delete chapters that are less than 5 seconds long.

1 **On the Title List or Chapter List menu, use ▲▼◄► to choose a chapter or title you want to delete then press ENTER.**
Options appears on the left side of the screen.

2 **Select 'Delete' from the options on the menu.**



3 **Press ENTER to confirm.**
The confirm message for deleting will appear.

4 **Use ◄ / ► to select 'Ok' then press ENTER.**
The selected chapter or title is deleted.
After pressing ENTER, the new, updated menu is displayed.

5 **Repeat steps 1 - 4 to continue to delete from the menu.**

6 **Press RETURN (↶) repeatedly to exit the menu.**

Notes :
- When DVD+RW recording, the deleted title's name is changed to 'Deleted Title'.
- If more than two titles are repeatedly deleted, the titles are combined into one.
- When you are deleting a title or chapter, only the last one on DVD+RW increases remaining recording time.

Deleting a Part

You can delete a part which you do not want in the title.

1 **Press MENU/LIST repeatedly to display Title List-Original or Title List-Playlist menu.**

2 **Use ▲▼◄► to choose a title you want to delete then press ENTER.**
The options appears on the left side of the menu.

3 **Select 'Delete Part' from the options on the menu.**



4 **Press ENTER.**
Title Edit (Delete Part) menu appears on the TV screen.
'Start Point' icon is highlighted.



5 **Starts playback and use pause step, search and slow-motion to find the starting point.**

6 **Press ENTER at the starting point of the section you want to delete.**
'End Point' icon is highlighted.
The part is indicated on the Progress Bar.

7 **Use pause step, search and slow-motion to find the ending point.**

8 **Press ENTER at the ending point of the section you want to delete.**
You can cancel the selected point, use ▲ / ▼ to select 'Cancel' icon then press ENTER.

9 **After you finish editing, select the 'Done' icon then press ENTER.**
The confirm message for deleting will appear.

10 **Use ◄ / ► to select 'Ok' then press ENTER.**
The selected part is deleted from the title and Title List-Original or Title List-Playlist menu appears.

Naming a Title

You can name titles independently.

1 On the Title List menu, use ▲ ▼ ◄ ► to choose the title you want to name then press ENTER.
Options appears on the left side of the menu.

2 Use ▲ ▼ ◄ ► to select the 'Title Name' option then press ENTER.
Keyboard menu appears.



3 Enter a name for the title. Use ▲ ▼ ◄ ► to select a character then press ENTER to confirm your selection. Refer to step 5 as shown on page 31 (Disc Label).

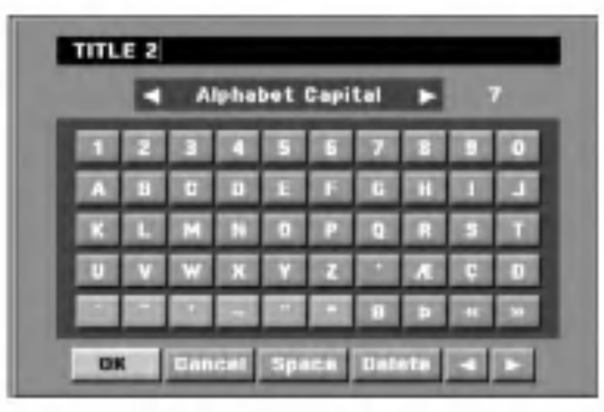

4 Choose OK then press ENTER to save the name and return to the previous menu display.

5 Press RETURN (↶) repeatedly to exit the menu.

Notes :

- Names can be up to 32 characters long.
- For discs formatted on a different DVD Recorder Receiver, you will see only a limited character set.
- When recording on DVD-R, DVD+R or DVD+RW discs, the entered name is displayed on the DVD Recorder Receiver only after finalization.

Combining Two Chapters Into One

Use this function to combine two adjacent Playlist or Original chapters into one.

Note :

This function is not available if there is only one chapter within the title.

1 On the Chapter List menu, select the first chapter of the two chapters you want to combine then press ENTER.
Chapter List options appear on the left side of the menu.

2 Use ▲ ▼ ◄ ► to select 'Combine'.
The combine indicator appears between the two chapters you want to combine.



3 Press ENTER to confirm.
After pressing ENTER, the updated menu is displayed.

Moving a Playlist Chapter

Use this function to re-arrange the playing order of the Playlist chapters on the Title List-Playlist menu.

Note :
This function is not available if there is only one chapter.

1 Select a chapter from the Chapter List-Playlist menu.

2 Press ENTER.
Chapter List-Playlist options appear on the left side of the menu.

3 Use ▲ ▼ ◄ ► to select 'Move' from Playlist options then press ENTER.



4 Use ▲ ▼ ◄ ► to choose the place you want to move the chapter to then press ENTER.
After pressing ENTER, updated menu is displayed.

Protect a Title

Use this function to protect against accidental recording, editing or deleting of the title.

1 Press MENU/LIST to display the Title List menu.

2 Use ▲ ▼ ◄ ► to choose a title you want to protect then press ENTER.
Options appear on the left side of the screen.

3 Select 'Protect' from the options.



4 Press ENTER to confirm.
The lock mark will appears on the title's thumbnail.

Tip
If you select a title that has already been protected on the Title List menu, you can 'unprotect' it by choosing "Protect" from the Title List menu options. After doing that, you can edit and delete the title.

Title and Chapter Editing (Continued)

Hide a Chapter

You can skip playing chapters without deleting from the disc.

1 On the Chapter List menu, use ▲▼◄► to choose a chapter you want to hide then press ENTER.
Options appear on the left side of the screen.

2 Select 'Hide' from the options.



3 Press ENTER to confirm.
The chapter's thumbnail will dim.

Tip

If you select a chapter that is already dim on the Chapter List menu, you can 'show' it by choosing "Show" from the Chapter List menu options. After doing that, you are able to see the title.

Dividing One Title Into Two

Use this command to split a title up into two new titles.

1 On the Title List menu, select a title you want to divide then press ENTER.
The menu options appears on the left side of the screen.

2 Select 'Divide' from the Title List menu options.



3 Press ENTER after the 'Divide' option is highlighted.
Title Edit (Divide) menu appears and goes into STOP mode.

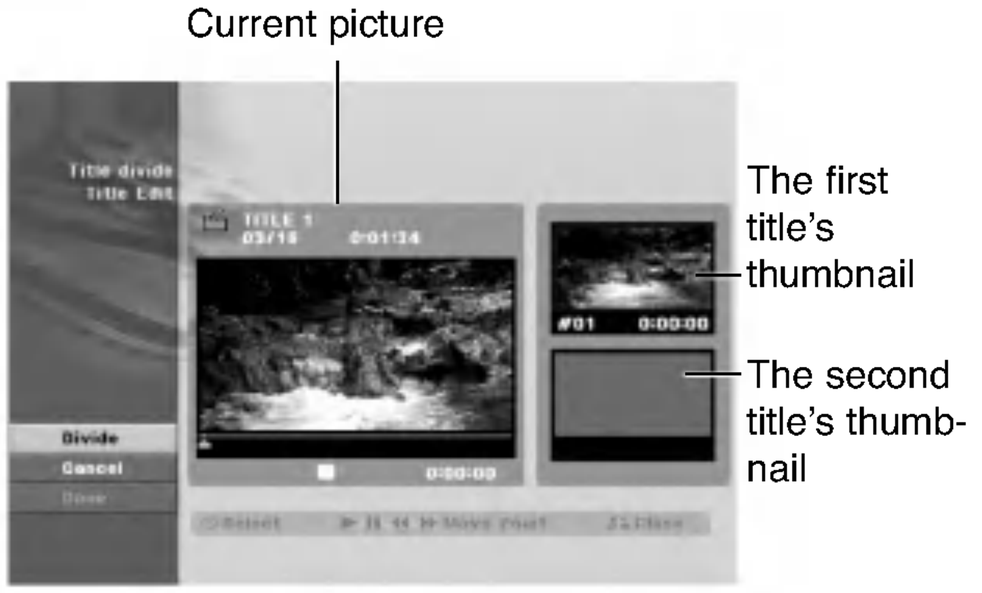

4 Use pause step, search and slow-motion to find the point you want to divide the title.

5 When the 'Divide' option is highlighted, press ENTER at that point.

You can remove the dividing point and exit the Title Edit (Divide) menu, use ▲ / ▼ to select 'Cancel' option then press ENTER. The division point is removed.

6 Choose 'Done' option then press ENTER to fix the dividing point.
The title is divided into two new titles. It take up to 4 minutes to divide.

Additional Information

Overwriting Recording

To overwrite a new video recording on a previously recorded title, follow these steps. This feature is not available for DVD+Rs, that always record at the end of the Disc.

1 **Select input source you want to record (TV channel, AV1-2, DV).**

2 **Press MENU/LIST to display the Title List menu.**



3 **Use ▲ ▼ ◄ ► to choose a title you want to overwrite.**

4 **Press REC (●) to start overwrite recording.**
Overwrite recording starts from the start point of the title.

5 **Press STOP (■) to stop the overwrite recording.**
The new title is created and updated menu is displayed.

Notes :

- This function is not available for a protected title.
- **If the overwrite is longer than the recording length of the current title, the next title is overwritten. But if next title is protected, the overwriting stops at the starting point of the title.**

Viewing Title List menu displayed on other DVD Recorders or Players

You can view the Title List menu displayed on the other DVD player that is capable of playing DVD+RW or DVD+R discs.

1 **Insert DVD+R or DVD+RW disc recorded already.**

2 **Press TITLE in play or stop mode.**
Title List menu will appear as shown below.

Tip

You can remove the Title List menu by pressing STOP (■).



3 **To play back a title, select the title you want then press ENTER or ► (PLAY).**

Playing Your Recordings on Other DVD Players (Finalizing a Disc)

Most regular DVD players can play finalized discs recorded in Video mode, finalized DVD+R or DVD+RWs. A small number of players can also play DVD-RW discs recorded in VR mode, finalized or not. Check the manual that came with the other player to check what formats of discs it will play.

Finalizing 'saves' the recordings and editings in place so that the disc can be played on a regular DVD player or computer equipped with a suitable DVD-ROM drive. Finalizing a Video mode disc creates a menu screen for navigating the disc. The menu can be accessed by pressing MENU/LIST or TITLE.
To finalize a disc, refer to "Finalize" on page 31.

Notes :

- Unfinalized DVD+RW is playable on regular DVD players.
- The edited contents of a DVD+RW disc is compatible on regular DVD players only after finalization.
- Any edited contents of the DVD+R disc are not compatible on regular DVD players. (Hide, chapter combine, added chapter mark, etc.)
- How long finalization takes depends on the type of disc, how much is recorded on the disc, and the number of titles on the disc.

Presetting the Radio Stations

You can preset 50 stations for FM and AM (MW). Before tuning, make sure that you have turned down the volume.

1 Press FM/AM on the remote control until FM or AM (MW) appears in the display window.

2 And then every time you press FM/AM, FM and AM (MW) changes alternately.

3 Press and hold TUN.- ◂◂ or TUN.+ ▸▸ on the remote control for about three seconds until the frequency indication starts to change, then release.
Scanning stops when the Recorder Combi Receiver tunes in a station. “ST” (for stereo program) appear in the display window.

4 Press ENTER on the remote control.
A preset number will flash in the display window.

5 Press TRK/PRESET- ▸▸| or TRK/PRESET- ▸▸| on the remote control to select the preset number you want.

6 Press ENTER on the remote control.
The station is stored.

7 Repeat steps 3 to 6 to store other stations.

To tune in a station with a weak signal

Press **TUN.- ◂◂ or TUN.+ ▸▸** repeatedly in step 3 to tune in the station manually.

To clear all the stored stations

Press and hold ENTER for about five seconds and “MEM CLEAR” is appeared in the display window and then press ENTER again, the stations are cleared.

- If you have accidentally entered into the "MEM CLEAR" mode and you do not wish to clear the memory, do not press any key. After a few seconds, the "MEM CLEAR" display will go off by itself and change to normal mode.

Listening to the Radio

Preset radio stations in the Recorder Combi Receiver’s memory first (see “Presetting radio stations” on the left).

1 Press FM/AM until AM (MW) or FM appears in the display window.
The last received station is tuned in.

2 Press **CH/TRK/PRESET- ▸▸| or TRK/PRESET- ▸▸|** repeatedly on the remote control to select the preset station you want.
Each time you press this button, the Recorder Combi Receiver tunes in one preset station at a time.

3 Adjust the volume by rotating VOLUME on the front panel or by pressing VOLUME + or - on the remote control repeatedly.

To turn off the radio

Press POWER to turn the Recorder Combi Receiver off or select another function mode (DVD, AV 1, AV 2 etc.,).

To listen to non-preset radio stations

- Use manual or automatic tuning in step 2.
- For manual tuning, press TUN.- ◂◂ or TUN.+ ▸▸ on the remote control repeatedly.
- For automatic tuning, press and hold TUN.- ◂◂ or TUN.+ ▸▸ on the remote control for about three seconds on the remote control.

For your reference

- **If an FM program is noisy**
Press MO./ST. on the remote control so that “ST” disappears in the display window. There will be no stereo effect, but the reception will improve. Press this button again to restore the stereo effect.
- **To improve reception**
Reorient the supplied antennas.

Language Code and Area Code List

Language Codes

Use this list to input your desired language for the following initial settings:
Disc Audio, Disc Subtitle, Disc Menu.

Language	Code	Language	Code	Language	Code	Language	Code
Abkhazian	6566	Fiji	7074	Lingala	7678	Singhalese	8373
Afar	6565	Finnish	7073	Lithuanian	7684	Slovak	8375
Afrikaans	6570	French	7082	Macedonian	7775	Slovenian	8376
Albanian	8381	Galician	7176	Malagasy	7771	Somali	8379
Ameharic	6577	Georgian	7565	Malay	7783	Spanish	6983
Arabic	6582	German	6869	Malayalam	7776	Sudanese	8385
Armenian	7289	Greek	6976	Maltese	7784	Swahili	8387
Assamese	6583	Greenlandic	7576	Maori	7773	Swedish	8386
Azerbaijani	6590	Guarani	7178	Marathi	7782	Tagalog	8476
Bashkir	6665	Gujarati	7185	Moldavian	7779	Tajik	8471
Basque	6985	Hausa	7265	Mongolian	7778	Tamil	8465
Bengali; Bangla	6678	Hebrew	7387	Nauru	7865	Tatar	8484
Bhutani	6890	Hindi	7273	Nepali	7869	Telugu	8469
Bihari	6672	Hungarian	7285	Norwegian	7879	Thai	8472
Breton	6682	Icelandic	7383	Oriya	7982	Tibetan	6679
Bulgarian	6671	Indonesian	7378	Panjabi	8065	Tigrinya	8473
Burmese	7789	Interlingua	7365	Pashto, Pushto	8083	Tonga	8479
Byelorussian	6669	Irish	7165	Persian	7065	Turkish	8482
Cambodian	7577	Italian	7384	Polish	8076	Turkmen	8475
Catalan	6765	Japanese	7465	Portuguese	8084	Twi	8487
Chinese	9072	Javanese	7487	Quechua	8185	Ukrainian	8575
Corsican	6779	Kannada	7578	Rhaeto-Romance	8277	Urdu	8582
Croatian	7282	Kashmiri	7583	Rumanian	8279	Uzbek	8590
Czech	6783	Kazakh	7575	Russian	8285	Vietnamese	8673
Danish	6865	Kirghiz	7589	Samoan	8377	Volapuk	8679
Dutch	7876	Korean	7579	Sanskrit	8365	Welsh	6789
English	6978	Kurdish	7585	Scots Gaelic	7168	Wolof	8779
Esperanto	6979	Laothian	7679	Serbian	8382	Xhosa	8872
Estonian	6984	Latin	7665	Serbo-Croatian	8372	Yiddish	7473
Faroese	7079	Latvian, Lettish	7686	Shona	8378	Yoruba	8979
				Sindhi	8368	Zulu	9085

Area Codes

Choose an area code from this list.

Area	Code	Area	Code	Area	Code	Area	Code
Afghanistan	AF	Ethiopia	ET	Malaysia	MY	Saudi Arabia	SA
Argentina	AR	Fiji	FJ	Maldives	MV	Senegal	SN
Australia	AU	Finland	FI	Mexico	MX	Singapore	SG
Austria	AT	France	FR	Monaco	MC	Slovak Republic	SK
Belgium	BE	Germany	DE	Mongolia	MN	Slovenia	SI
Bhutan	BT	Great Britain	GB	Morocco	MA	South Africa	ZA
Bolivia	BO	Greece	GR	Nepal	NP	South Korea	KR
Brazil	BR	Greenland	GL	Netherlands	NL	Spain	ES
Cambodia	KH	Islands	HM	Netherlands Antilles	AN	Sri Lanka	LK
Canada	CA	Hong Kong	HK	New Zealand	NZ	Sweden	SE
Chile	CL	Hungary	HU	Nigeria	NG	Switzerland	CH
China	CN	India	IN	Norway	NO	Taiwan	TW
Colombia	CO	Indonesia	ID	Oman	OM	Thailand	TH
Congo	CG	Israel	IL	Pakistan	PK	Turkey	TR
Costa Rica	CR	Italy	IT	Panama	PA	Uganda	UG
Croatia	HR	Jamaica	JM	Paraguay	PY	Ukraine	UA
Czech Republic	CZ	Japan	JP	Philippines	PH	United States	US
Denmark	DK	Kenya	KE	Poland	PL	Uruguay	UY
Ecuador	EC	Kuwait	KW	Portugal	PT	Uzbekistan	UZ
Egypt	EG	Libya	LY	Romania	RO	Vietnam	VN
El Salvador	SV	Luxembourg	LU	Russian Federation	RU	Zimbabwe	ZW

Troubleshooting

Check the following guide for the possible cause of a problem before contacting service.

Symptom	Cause	Solution
No power.	• The power cord is disconnected.	• Plug the power cord into the wall outlet securely.
No picture.	• TV/DVD mode for the recorder is set to TV.	• Press TV/DVD on the remote control repeatedly to choose DVD mode. TV indicator disappears in the display window.
	• The TV is not set to receive DVD Recorder Receiver signal output.	• Select the appropriate video input mode on the TV so the picture from the DVD Recorder appears on the TV screen.
	• The video cable is not connected securely.	• Connect the video cable securely.
	• The connected TV power is turned off.	• Turn on the TV.
No sound.	• The equipment connected with the audio cable(s) is not set to receive DVD Recorder Receiver signal output.	• Select the correct input mode on the Audio Receiver so you can listen to the sound from the DVD Recorder Receiver.
	• The audio cables are not connected securely.	• Connect the audio cable securely.
	• The power of the equipment connected with the audio cable is turned off.	• Turn on the equipment connected with the audio cable.
	• The audio connecting cord is damaged.	• Replace it with new one.
The playback picture is poor.	• The disc is dirty.	• Clean the disc.
The DVD Recorder Receiver does not start playback.	• No disc is inserted.	• Insert a disc. (Check that the disc indicator in the display window is lit.)
	• An unplayable disc is inserted.	• Insert a playable disc. (Check the disc type, color system, and regional code.)
	• The disc is placed upside down.	• Place the disc with the playback side down.
	• The disc is not placed within the guide.	• Place the disc on the disc tray correctly inside the guide.
	• The disc is dirty.	• Clean the disc.
	• The Rating level is set.	• Cancel the Rating function or change the rating level.
The picture from the external input is distorted	• The video signal from the external component is copy-protected.	• You cannot connect via this Recorder. Connect the component directly to your TV.
Some channels are skipped over when using ▲ / ▼.	• Those channels are not stored in the Recorder.	• Restore channels. See “Program Edit” on pages 23-24.
The picture or sound of broadcasting channel is weak or missing.	• Aerial or cables are loose.	• Tighten connections or replace cable.
The picture from the external input is not shown.	• The recorder’s source is incorrect.	• Use AV to select input channel (AV1, OPT, AV2 or DV)
Radio stations cannot be tuned in.	• The antenna is positioned or connected poorly. • The signal strength of the stations is too weak (when tuning in with automatic tuning).	• Connect the antenna securely. • Adjust the antennas and connect an external antenna if necessary. • Tune in the station manually.

Troubleshooting (Continued)

Symptom	Cause	Solution
Can't play a disc recorded using this Recorder on another player.	• The disc was recorded in Video mode.	• Finalize the disc. (page 31)
	• Some players will not play even a finalized disc recorded in Video mode.	• No solution.
	• The disc was recorded in VR mode,	• The other player must be RW compatible in order to play it.
	• Discs recorded with copy-once material cannot be played on other players.	• No solution.
Cannot record or did not record successfully.	• The remaining blank space on the disc is insufficient.	• Use another disc.
	• The source you are trying to record is copy protected.	• You cannot record the source.
	• When setting the recording channel, the channel is tuned on the TV's own tuner.	• Select the channel on the Recorder's built-in TV tuner.
	• When recording to a Video mode disc, programs that are copy-once protected cannot be recorded.	• Use a VR mode formatted disc for copy-once material.
Timer recording is not possible.	• Clock in DVD Recorder Receiver is not set to correct time.	• Set clock to correct time. See "Auto Clock Set" or "Manual Clock Set" on page 25.
	• Timer has been programmed incorrectly.	• Reprogram Timer. See "Timer Recording" on page 44.
	• Timer record indicator light does not appear after programming timer.	• Reprogram Timer.
Stereo Audio Record and/or Playback is not present.	• TV is not Stereo-compatible.	• No solution.
	• Broadcast program is not in stereo format.	• No solution.
	• DVD Recorder Receiver A/V Out jacks are not connected to TV A/V In jacks.	• Make A/V connections. Stereo is available only via A/V output from DVD Recorder.
	• DVD Recorder Receiver Audio/Video Out is not selected for viewing at the TV.	• Select AUX or A/V source as TV input.
	• DVD Recorder Receiver's TV audio channel is set to mono.	• Set TV audio channel mode to Stereo. See "Changing TV audio channel" on page 43.
The Remote Control does not work properly.	• The Remote Control is not pointed at the remote sensor on the DVD Recorder.	• Point the Remote Control at the remote sensor on the DVD Recorder Receiver.
	• The Remote Control is too far from the DVD Recorder Receiver.	• Operate the Remote Control within 7 m.
	• There is an obstacle in the path of the Remote Control and the DVD Recorder.	• Remove the obstacle.
	• The batteries in the Remote Control are exhausted.	• Replace the batteries with new ones.

Resetting the recorder

If you observe any of the following symptoms...

- The unit is plugged in, but the power will not turn on or off.
- The front panel display is not working.
- The recorder is not operating normally.

...you can reset the recorder as follows:

- Press and hold the POWER button for at least five seconds. This will force the unit to power off then turn the unit back on.
- Unplug the power cord, wait at least five seconds, and then plug it in again.

Specifications

General

Power requirements	AC 220-240V, 50/60 Hz
Power consumption	110W
Dimensions (approx.)	435 x 57x 372 mm (w x h x d)
Mass (approx.)	4.9Kg
Operating temperature	5˚C to 35˚C
Operating humidity	5 % to 90 %
Television system	PAL B/G, PAL I/I, SECAM D/K colour system
Recording format	PAL

Recording

Recording format	DVD Video Recording, DVD-VIDEO
Recordable discs	DVD-ReWritable, DVD-Recordable, DVD+ReWritable, DVD+Recordable, DVD+Recordable (Double Layer)
Recordable time	DVD (4.7GB): Approx. 1 hour (HQ mode), 2 hours (SQ mode), 4 hours (LQ mode), 6 hours (EQ mode)
Video recording format	
Sampling frequency	27MHz
Compression format	MPEG 2
Audio recording format	
Sampling frequency	48kHz
Compression format	Dolby Digital

Playback

Frequency response	DVD (PCM 48 kHz): 8 Hz to 22 kHz, CD: 8 Hz to 20 kHz DVD (PCM 96 kHz): 8 Hz to 44 kHz
Signal-to-noise ratio	More than 100 dB (AUDIO OUT connector)
Harmonic distortion	Less than 0.008% THD (AUDIO OUT connector)
Dynamic range	More than 95 dB (AUDIO OUT connector)

Inputs

ANTENNA IN	Antenna input, 75 ohms
VIDEO IN (AV1,2)	1.0 Vp-p 75 ohms, sync negative, RCA jack x 2
AUDIO IN (AV1,2)	-6 dBm more than 47 kohms, RCA jack (L, R) x 2
S-VIDEO IN	(Y) 1.0 V (p-p), 75 Ω, negative sync, Mini DIN 4-pin x 1 (C) 0.286 V (p-p) 75 Ω
OPTICAL IN	Optical connector x 1
DV IN	4 pin (i.LINK/IEEE 1394 standard)

Outputs

VIDEO OUT	1 Vp-p 75 Ω, sync negative, RCA jack x 1
S-VIDEO OUT	(Y) 1.0 V (p-p), 75 Ω, negative sync, Mini DIN 4-pin x 1 (C) 0.286 V (p-p) 75 Ω
COMPONENT VIDEO OUT (PROGRESSIVE SCAN)	(Y) 1.0 V (p-p), 75 Ω, negative sync, RCA jack x 1 (Pb)/(Pr) 0.7 V (p-p), 75 Ω, RCA jack x 2
Audio output (digital audio)	0.5 V (p-p), 75 Ω, RCA jack x 1
Audio output (optical audio)	3 V (p-p), 75 Ω, Optical connector x 1
Audio output (analog audio)	2.0 Vrms (1 KHz, 0 dB), 600 Ω, RCA jack (L, R) x 1

cvvv

Specifications (Continued)

Amplifier

Stereo mode	70W + 70W (8Ω at 1 kHz, THD 10 %)
Surround mode	Front: 70W + 70W (THD 10 %)
(* **Depending on the sound mode settings and the source, there may be no sound output.**)	Center*: 70W Surround*: 70W + 70W (8Ω at 1 kHz, THD 10 %) Subwoofer*: 150W (4Ω at 30 Hz, THD 10 %)

Tuner Specifications

Tuning Range (FM)	87.5 - 108 MHz
Intermediate Frequency (FM)	10.7 MHz
Signal-to-noise ratio	60 dB (Mono)
Tuning Range (AM)	522 - 1,611 kHz
Intermediate Frequency (AM)	450 kHz
Antenna	Wire antenna (FM) Loop antenna (AM)

Speakers

Front (LHS-55SBS)

Type:	1 Way 1 Speaker
Impedance:	8 Ω
Frequency Response:	110 - 20,000 Hz
Sound Pressure Level:	82 dB/W (1m)
Rated Input Power:	70W
Max Input Power:	140W
Net Dimensions (**WxHxD**):	140 x 222 x 153 mm
Net Weight:	0.95 kg

Center (LHS-55SBC)

Type:	1 Way 1 Speaker
Impedance:	8 Ω
Frequency Response:	110 - 20,000 Hz
Sound Pressure Level:	82 dB/W (1m)
Rated Input Power:	70W
Max Input Power:	140W
Net Dimensions (**WxHxD**):	300 x 116 x 91 mm
Net Weight:	1.0 kg

Passive Subwoofer (LHS-55SBW)

Type:	1 Way 1 Speaker
Impedance:	4 Ω
Frequency Response:	40 - 1,500 Hz
Sound Pressure Level:	82 dB/W (1m)
Rated Input Power:	150W
Max Input Power:	300W
Net Dimensions (**WxHxD**):	180 x 400 x 355 mm
Net Weight:	5.6 kg

Accessories:

Video cable x 1, Audio cable (L, R) x 1, RF 75-ohm Coaxial Cable x 1, Speaker cable x 6, FM Antenna cable x 1, AM Antenna cable x 1, Remote control x 1, Batteries (AAA) x 2, Ferrite core x 2

- ***Design and specifications are subject to change without notice.***



P/N: 3834RH0075Q