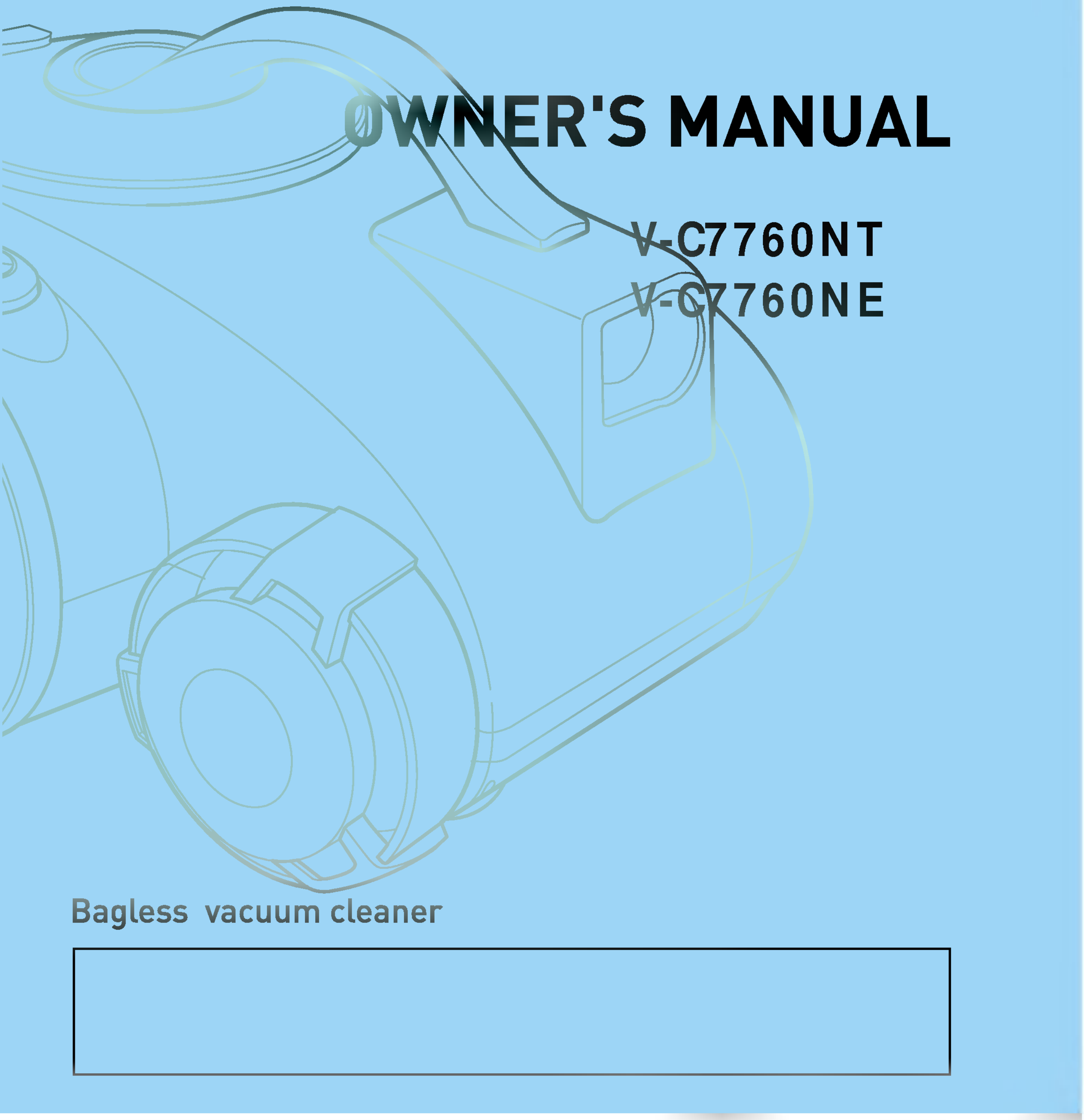

OWNER'S MANUAL

V-C7760NT

V-C7760NE

Bagless vacuum cleaner

Table of contents

Information for Your Safety.....3

How to Use.....4

Assembling the Cleaner 4

Using the cleaning head and Accessories.....6

Emptying the Dust Chamber 8

Operation.....9

Adjusting the Suction power 9

Park-System 9

Cleaning the Motor Filter / Air Cleaner 10

Cleaning the Dust Chamber 11

Cleaning the Exhaust Filter 11

What to do if there is something wrong with your Vacuum Cleaner 12

What to Do if your Vacuum Cleaner Does Not Work.....12

What to Do When Suction Performance Decreases 12

Information for Your Safety

Please read all the following information, which contains important instructions for the safety, the use and the maintenance of the appliance.
This appliance complies with the following EC Directives: -73/23/EEC, 93/68/EEC-Low Voltage Directive-89/336EEC -EMC Directive.

- ❑ Do not use the appliance If the power cable is damaged or faulty.
- ❑ If the power cable is damaged, it must be replaced by an approved LG Electronics Service Agent to avoid a hazard.
- ❑ Always switch the vacuum cleaner off before:
  - Emptying the dust chamber.
  - Cleaning or changing the filters.
- ❑ Do not vacuum flammable or explosive substances(liquids or gases).
- ❑ Do not vacuum hot ash, embers etc. or sharp objects.
- ❑ Do not vacuum water or other liquids.
- ❑ When you vacuum with an attachment appliance that has a rotating brush roller:
- ❑ The application is not intended for use by young children or infirm persons without supervision.
- ❑ Young Children should be supervised to ensure that they do not play with appliance.
- ❑ If the appliance is supplied from a cord extension set or an electrical portable outlet device, the cord extension set on electrical portable outlet device must be positioned so that it is not subject to splashing or ingress of moisture.

3828Fi2836G

Assembling Cleaner

Fit the large cleaning head onto the end of the tube.

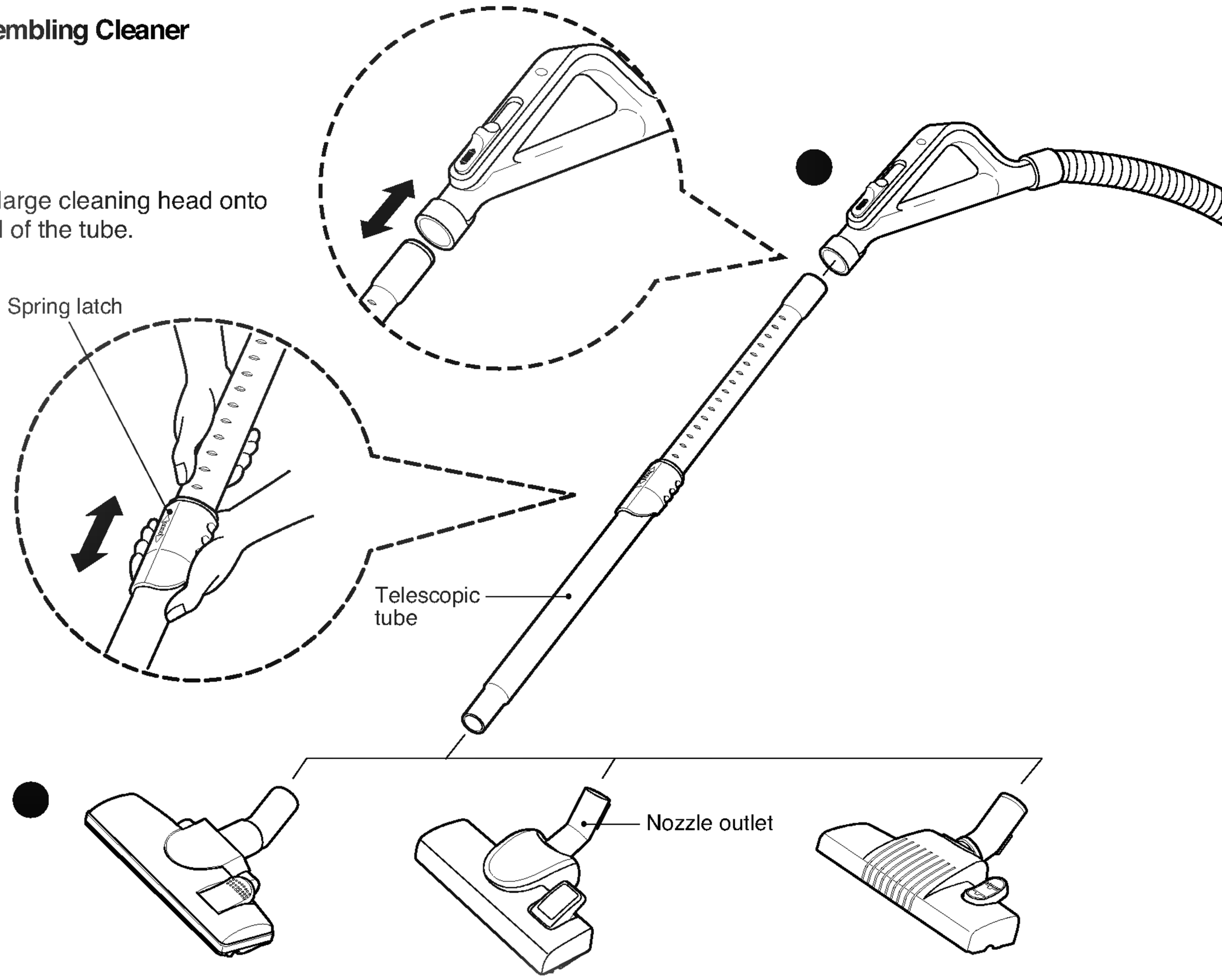

Push the head onto the telescopic tube.

- Press the spring latch to release.
- Pull out the tube to the desired length.
- Release spring latch to lock the tube in position.
- Push telescopic tube into hose handle until catch clicks.

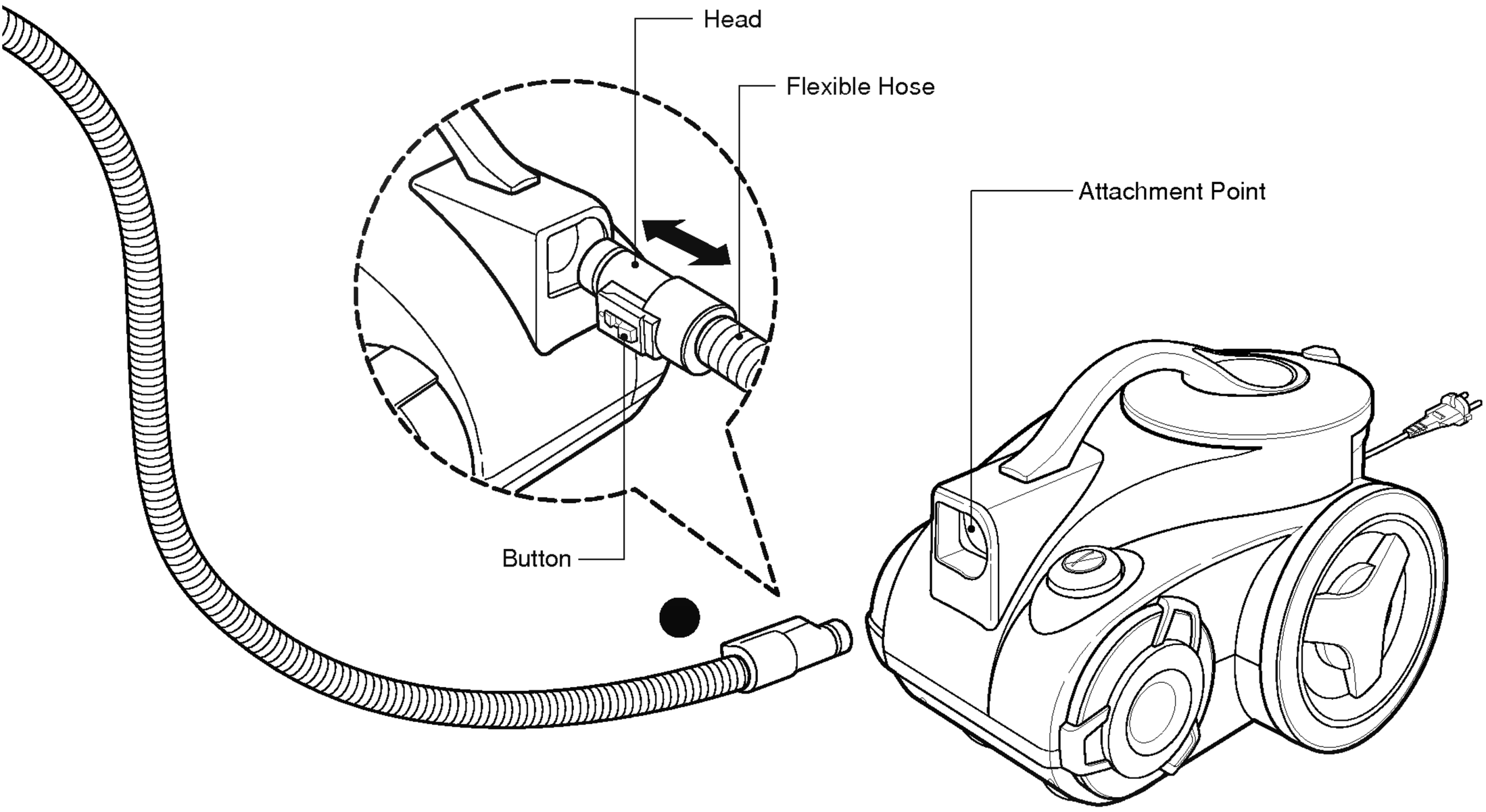

Push the end of the head on the flexible hose into the attachment point on the vacuum cleaner. To remove the flexible hose from the vacuum cleaner, press on the button situated on the head, then pull the head out of the vacuum cleaner.

Using the cleaning head and Accessory Nozzles

Tear the vinyl bag and pull out accessories.
Attach the accessory holder into the side hole of body.
And then, Fit the Dusting Brush & Crevice Tool and Upholstery Nozzle onto the accessory holder.
Fit the accessory onto the end of the tube.

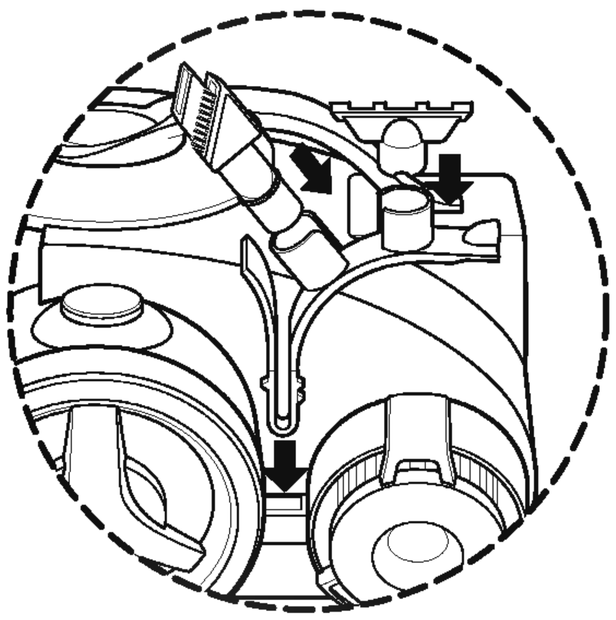

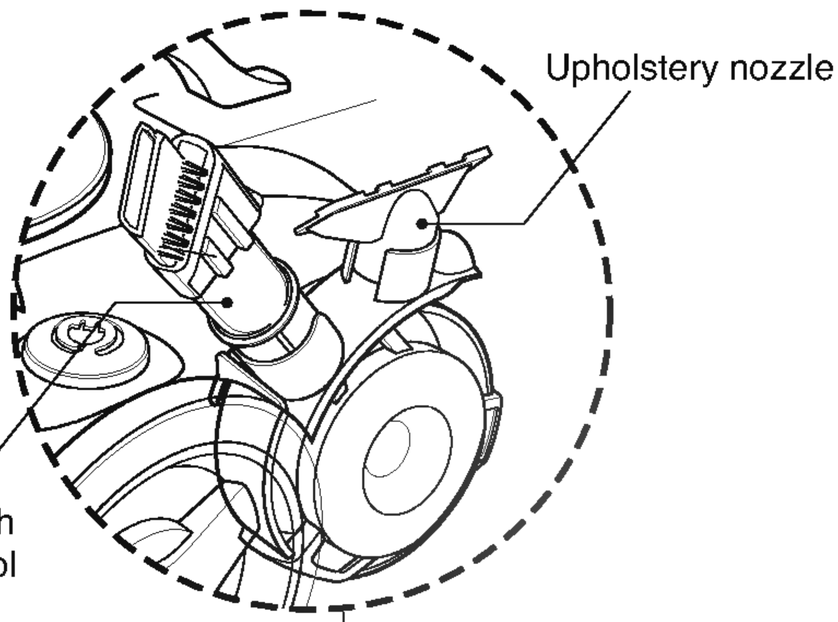

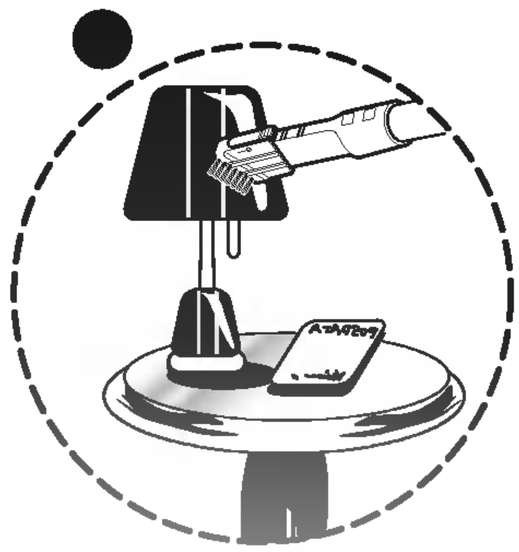

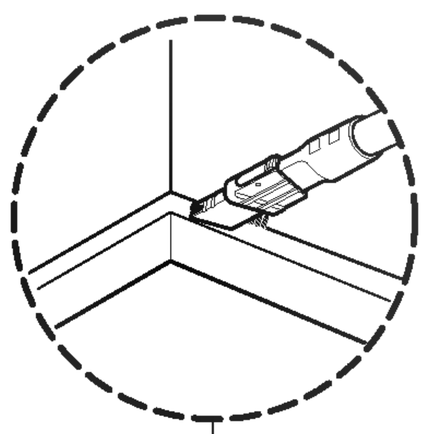

Upholstery Nozzle is for vacuuming upholstery, mattresses, etc.
The thread collectors help to pick up the threads and fluff.

The dusting Brush is for vacuuming picture frames, furniture frames, books and other hard surfaces.
Crevice Tool is for vacuuming in those normally hard-to-reach places such as reaching cobwebs, or between the cushions of a sofa.

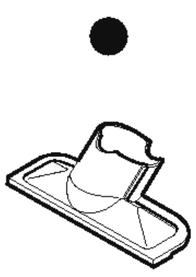

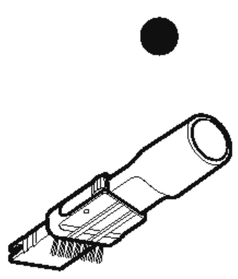

(Refer to Page 6)

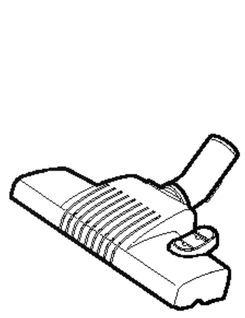

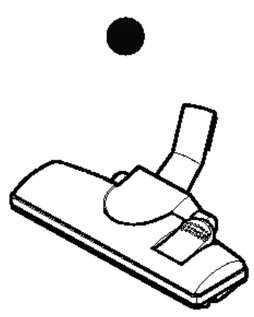

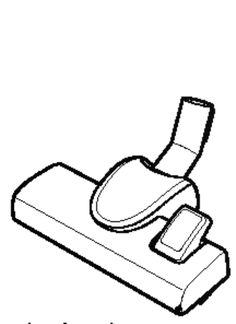

(See below)

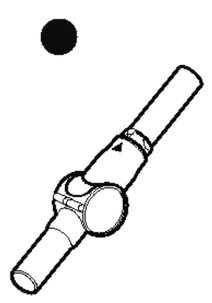

(See below)

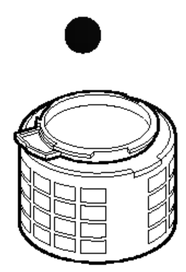

(Refer to Page 10)

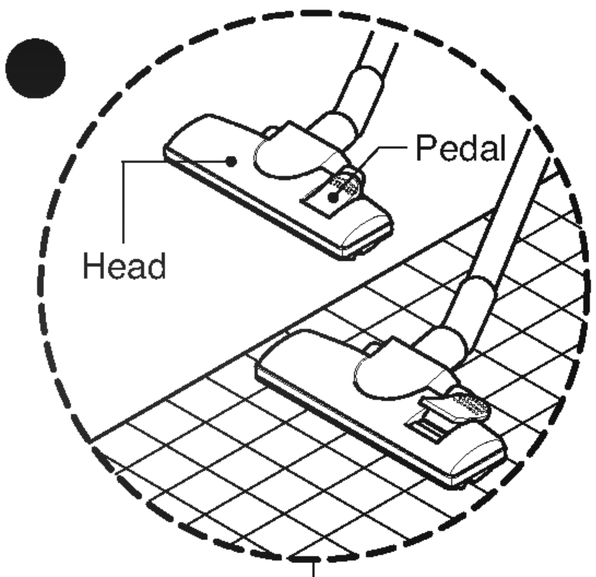

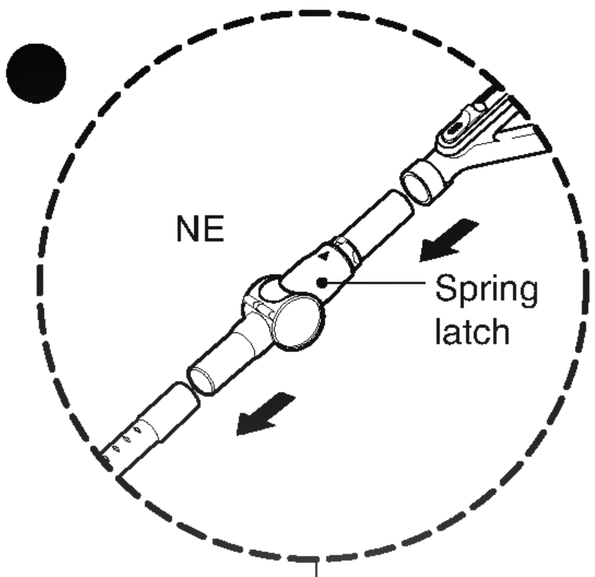

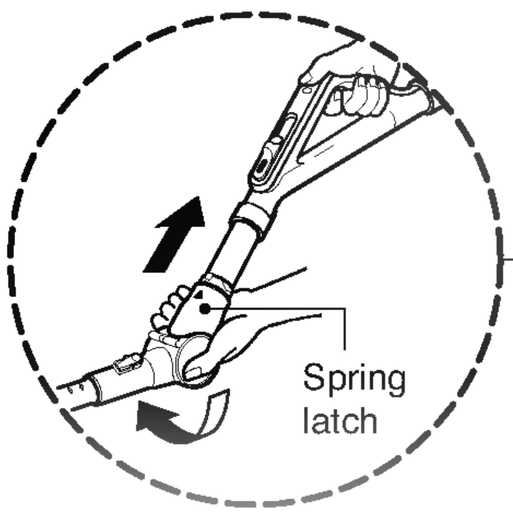



C K

- **The 2 position cleaning head is** equipped with a pedal which allows you to alter the brush position according to the type of floor to be cleaned.
- **Hard floor position(tiles, parquets floor)**
  Press the pedal to lower brush.
- **Carpet or rug position**
  Press the pedal to use the brush.

Elbow tube is for cleaning under the sofa, table and bed easily.

- Connect the elbow tube to the flexible hose and, connect the telescopic tube to the elbow tube. (You can also connect the telescopic tube to the flexible hose without the elbow tube.)
- If you pull the spring latch, the elbow tube can be bent.
- If you stretch the elbow tube, it is returned to its position.

Emptying the dust chamber

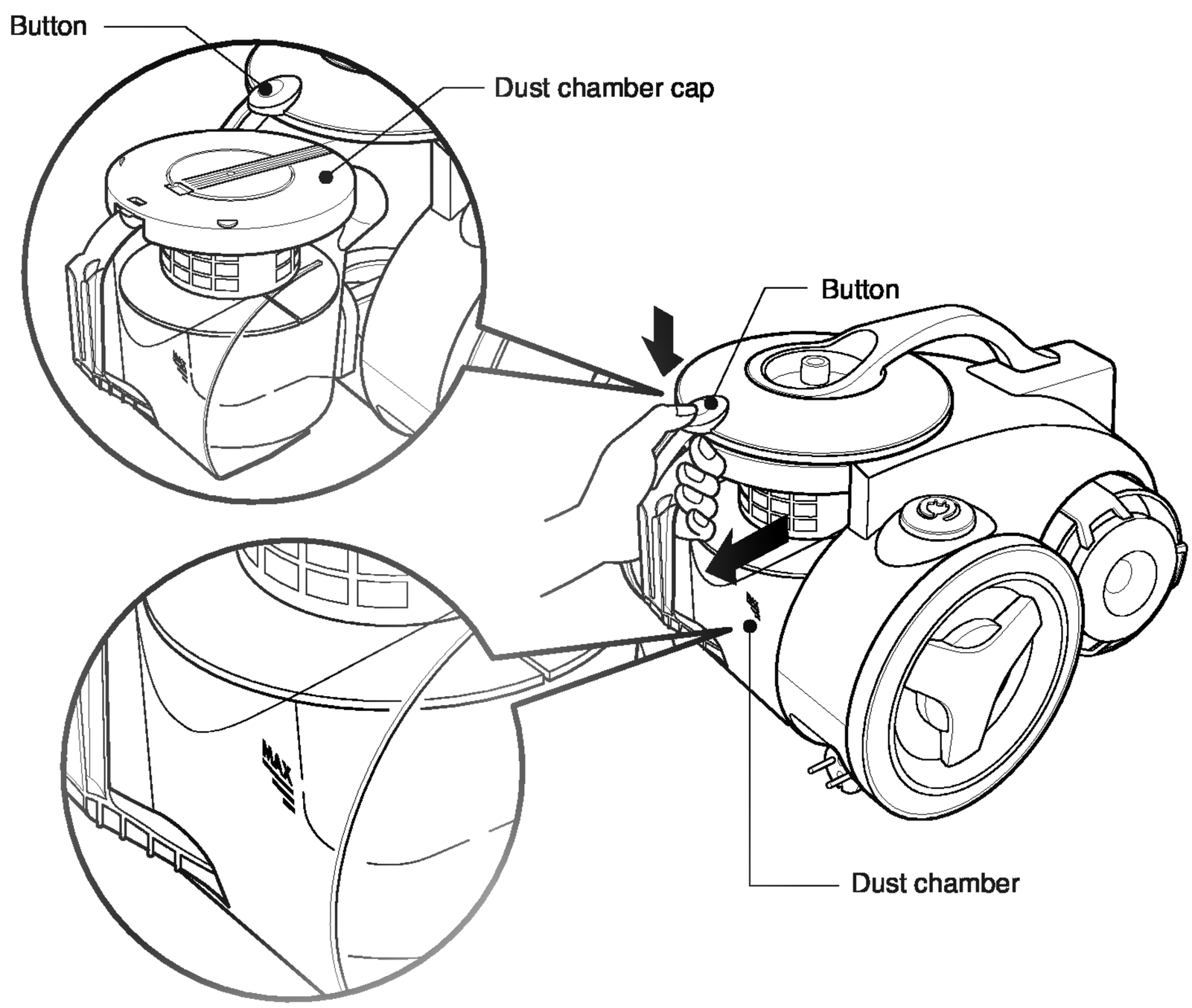

The dust chamber needs emptying when dust reaches the MAX indicator on the dust tank.

- Turn off the vacuum cleaner and unplug it.
- Press the button of the cover and pull the dust chamber out. Remove the dust chamber cap and empty the dust chamber.
- To reinstall the dust chamber, replace the dust chamber cap and push the dust chamber into the tank mount as far as it will go.

Operation

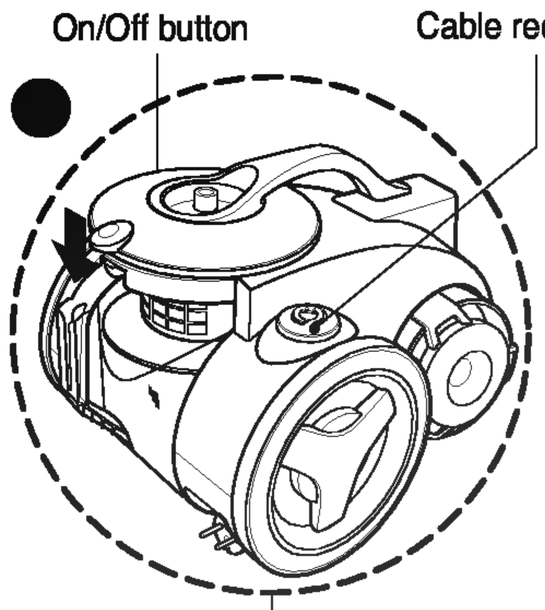

- Pull out the power cord to the desired length and put plug into the socket.
- Press On/Off button to start the vacuum cleaner.
- To stop it, press On/Off button again.
- Press the cable reel button to retract the power cord after use.

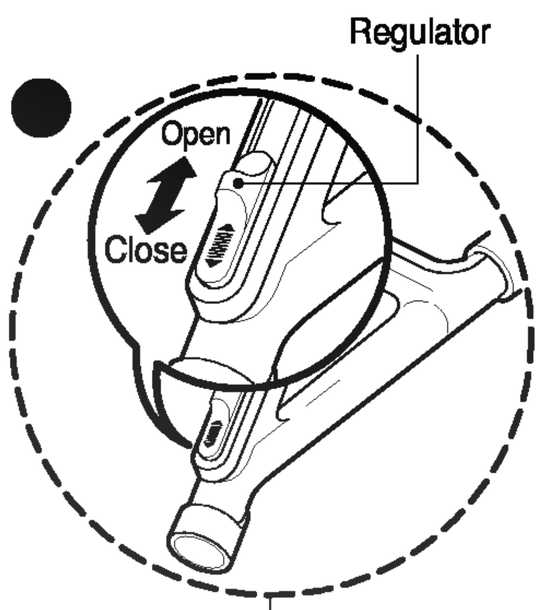

- The flexible hose handle has a manual air flow regulator which allows you to reduce the suction level briefly.

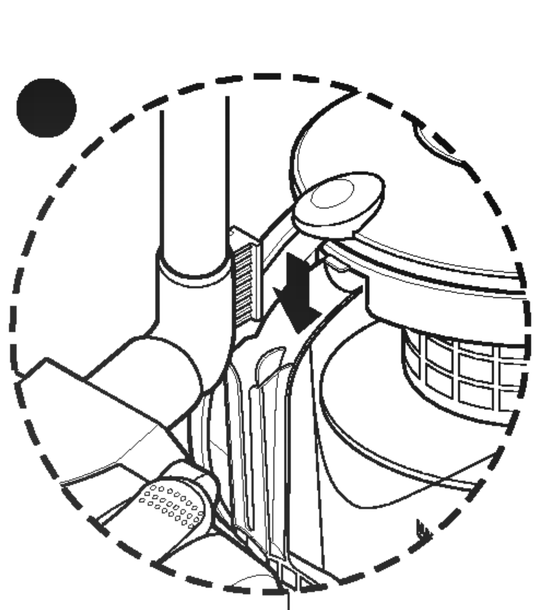

- To store after vacuuming and pause while vacuuming.
  - When you have finished vacuuming, use the Park System to support the flexible hose and cleaning head.
  - Slide the hook on the large cleaning head into the slot on the handle of the dust chamber.

3828Fi2836G

Cleaning the Motor Filter/Air cleaner

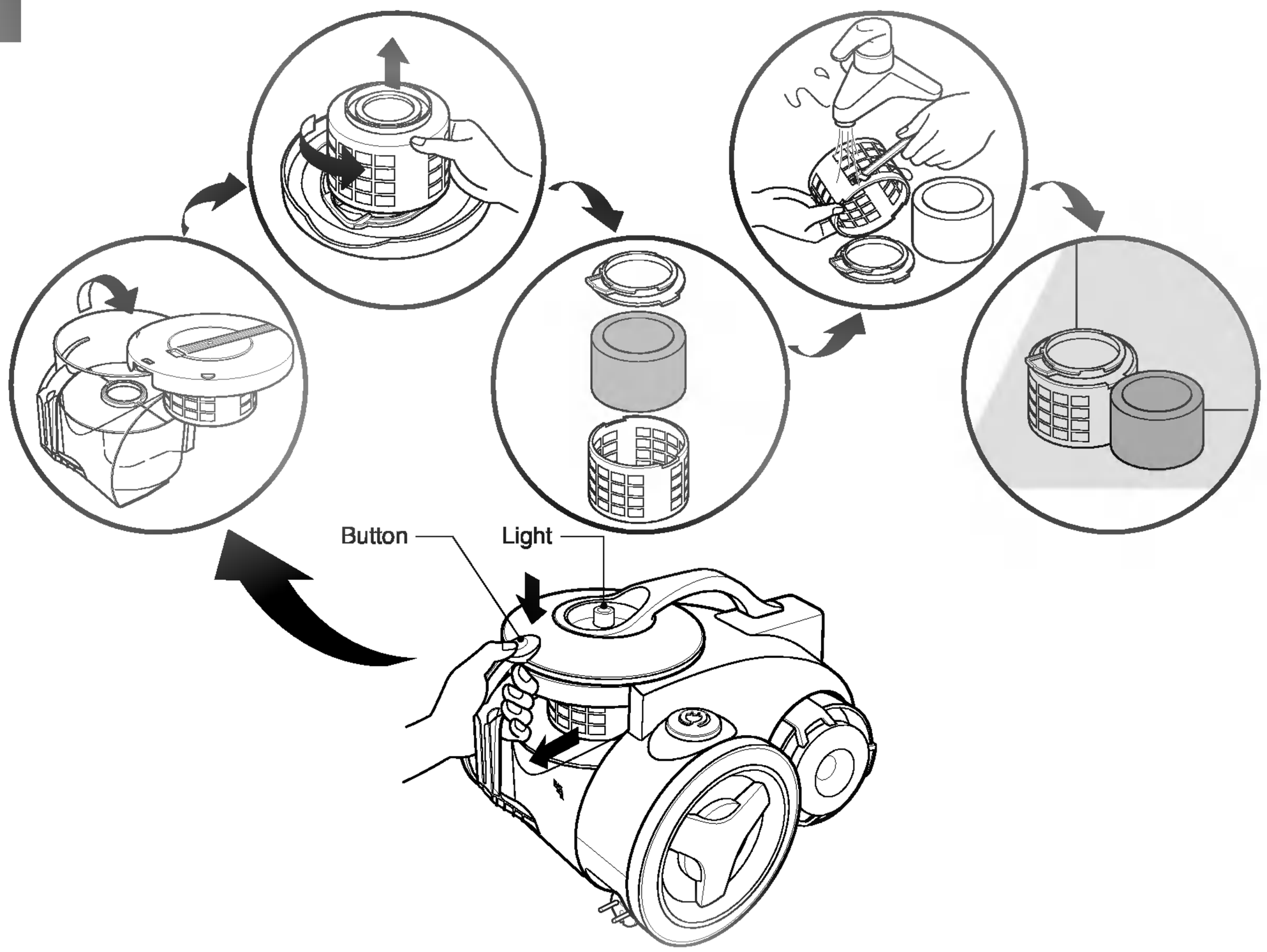

The permanent motor filter is situated under the dust chamber cap.
When the filter light comes on the motor filter requires cleaning.

- Press the button of cover and pull the dust chamber out.
- Open the dust chamber cap.
- Remove the motor filter by rotating it counter-clockwise.
- Clean the motor filter with the brush under cold running water.
- Allow the motor filter to dry naturally, the motor filter should be cleaned every 6 months.
- The spare motor filter must be used while the other motor filter is drying.

⚠ WARNING!

Gently rinse both parts separately under cold running water until the water runs clear. **Hand wash only with damp cloth.**
Shake off excess water from the filter.
Do not tumble/spindry, microwave or place in oven or on direct heat.
Ensure the filter is completely dry.
Re-assemble and place it back in your machine, filter frame.

Cleaning the Dust Chamber

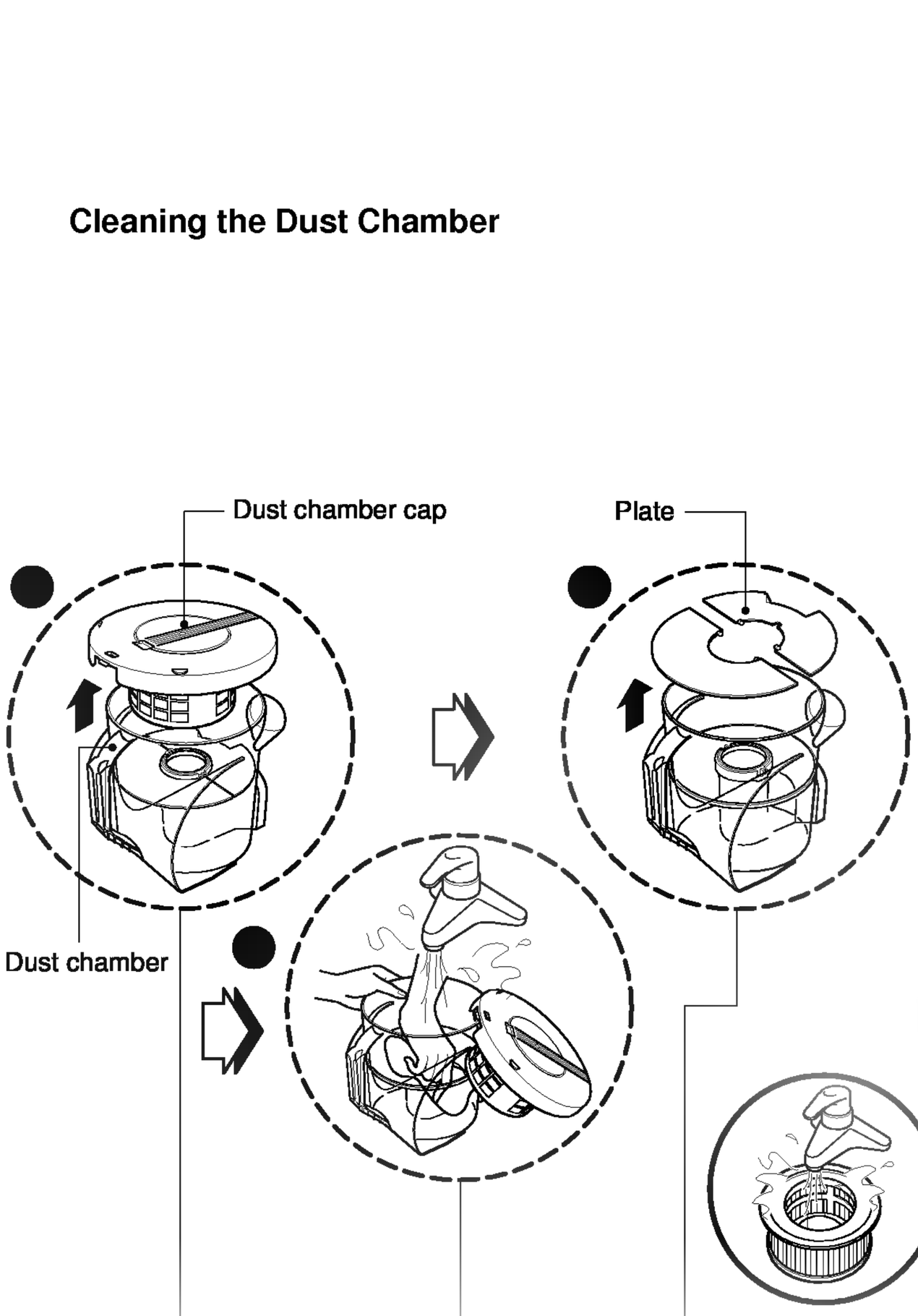

❶ Open the dust chamber cap.

❷ Remove two plates from the dust chamber.

❸ Wash both parts with soft cloth.
Gently rinse both parts under cold running water.

Cleaning the Exhaust Filters

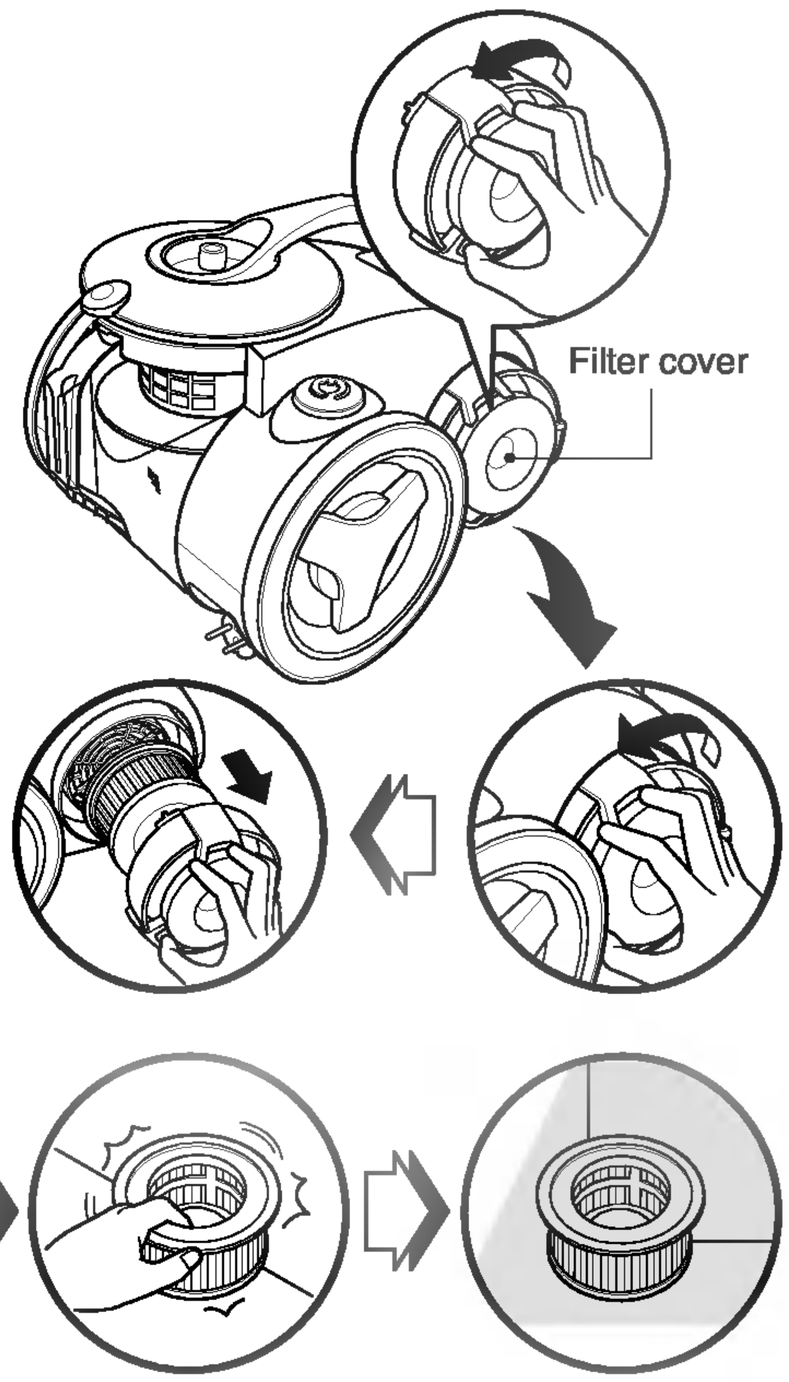

- The exhaust filter is a washable reusable HEPA filter.
- To clean the exhaust filter, remove the filter cover on the body by rotating the filter cover counter-clockwise.
- Pull out the exhaust filter.
- Clean it with cold, running water.
  Do not use the brush as this will damage the filter.
- Allow exhaust filter to dry completely in a shaded location.
- The exhaust filter should be cleaned at least once a year.

3828Fi2836G

What to do if there is something wrong with your Vacuum Cleaner

What to Do if Your Vacuum Cleaner Does Not Work

Check that the vacuum cleaner is plugged in correctly and that the electrical socket is working.

What to Do When Suction Performance Decreases

- Turn off the vacuum cleaner and unplug it.
- Check the telecsopic tube, flexible hose and cleaning tool for blockages or obstructions.
- Check that the dust chamber is not full. Empty if necessary.
- Check that the motor filter light is not on. Clean the motor filter, if necessary.
- Check that the exhaust filter is not blocked. Clean the exhaust filter, if necessary.

WARNING!

Should it become necessary to replace the moulded plug then the detective plug should be replaced by a qualified electrician.

Notes

C K

Notes

3828Fi2836G

3828Fi2836G

LG Electronics Inc.

P/No.: 3828Fi2836G

3828Fi2836G