Use and Care manual

LG Condensing Dryer

TD-C70080E
TD-C70085E

Please read this manual carefully prior to use.
Keep it for future reference.
Write down model name and serial number of your product
Have all these details ready when you call for service.

Features

F

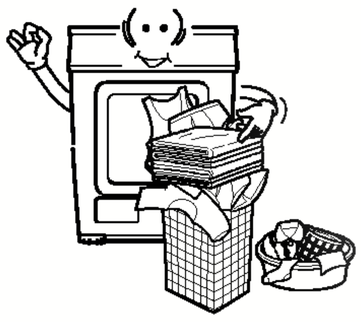

Ultra big Capacity Drum

LG Dryer has 7.0kg capacity which is the ultra big capacity.

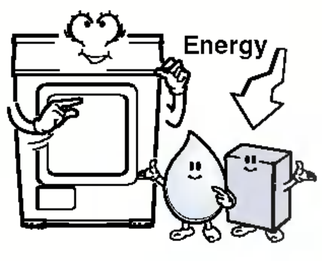

Lower Energy Consumption

Energy is saved by Sirocco & Radial fan.

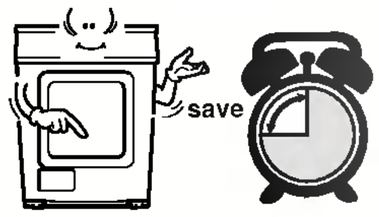

Reduced drying time

Drying time is shortened by efficient air flow mechanism and optimized heater.



Innovative noise performance

Noise gets reduced by Noise-absorption & screening technology.

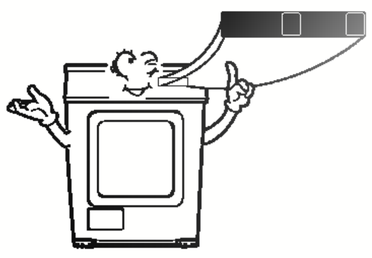

Easy of Use

Double LCD display using electric control.

Contents

F

Safety Instructions 3
Installation Instructions 6
Appearance & design 9
Operating your dryer 10
Additional Functions 14
Caring for your dryer 15
Additional Tips for smart use 20
Troubleshootings 22
Technical Data 24
Warranty 25

afety instructions

F

To help reduce any risk of electric shock, fire, or other personal or property injury when using your dryer, please follow basic safety instructions.

Not allowed actions.

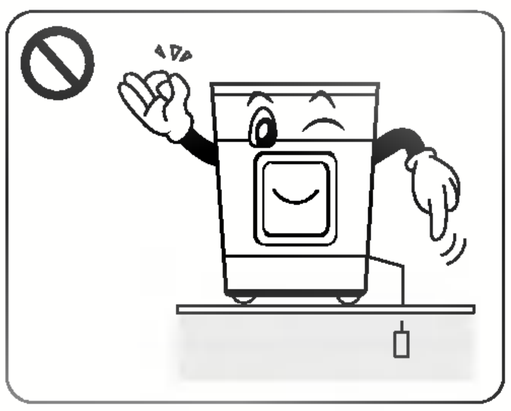

• Your dryer is only for 230V. Before plugging power cord, make sure cord is grounded and connected to circuit breaker.

No grounding may cause breakdowns or an electric shocks.

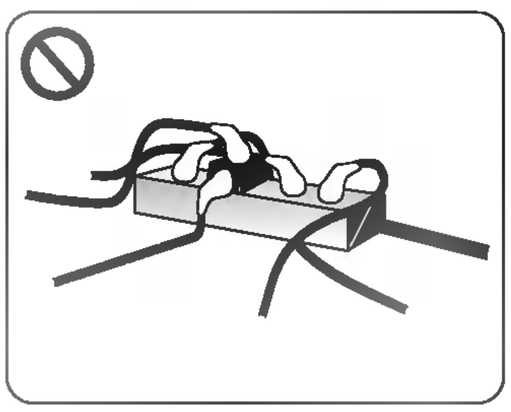

• Do not plug with several other appliances power cords.

Abnormal heating of outlet may cause an fire.

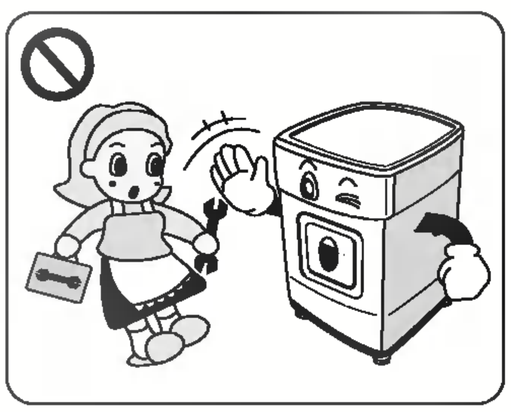

• Disassembly or revision should be conducted by an experienced service person.

It may cause breakdowns, a fire and an electric shock.

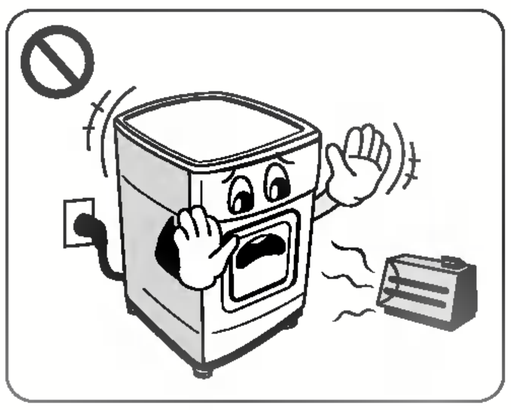

• Keep the dryer away from electric stove, candle and any inflammable Objects.

It may cause melting of some parts or an fire.

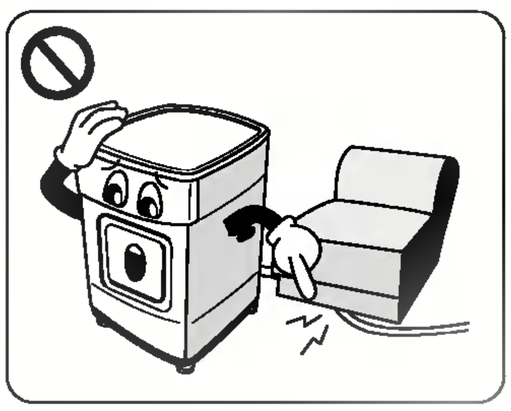

• Do not damage power cord itself or place heavy objects on the cord.

Cord damage may cause a fire and an electric shock.

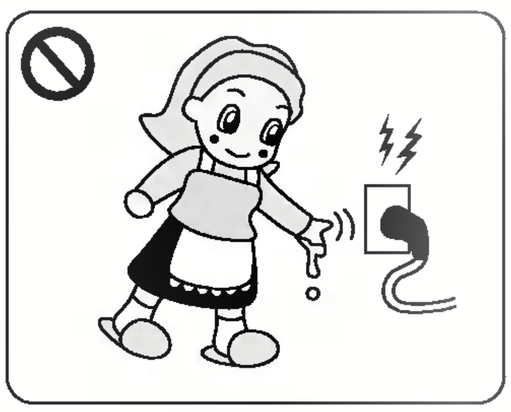

• Do not grasp power cord or switch with wet hands.

It may cause an electric shock.

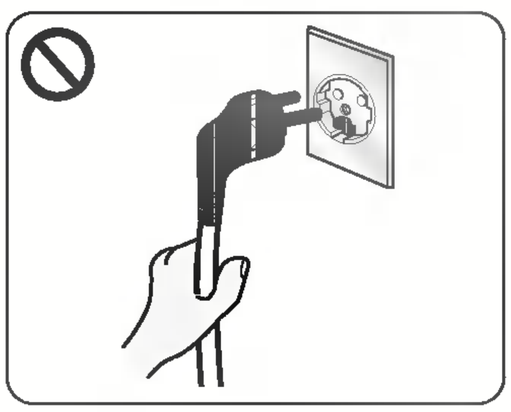

• Disconnect the power cord by grasping the plug, not the cord.

It may cause cutting off wires so results in hot heat or a fire.

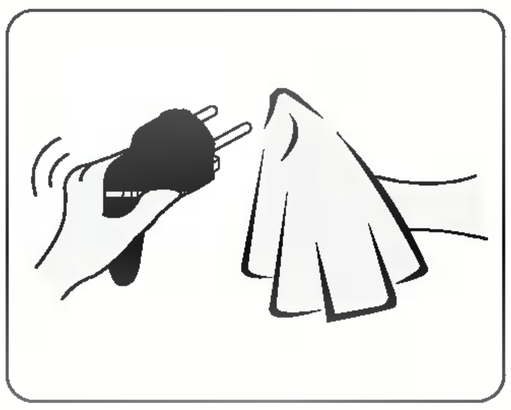

• Wipe out the dirts and stains around the power cord and insert firmly to the socket.

Dirts around it and improper connection may cause a fire.

Safety instructions

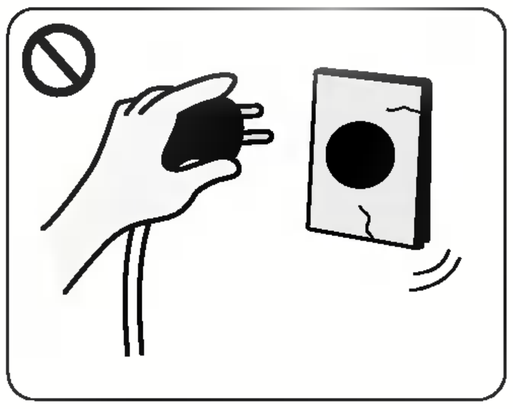

• Do not use damaged power cord, plug and socket.

It may cause a fire and an electric shock.

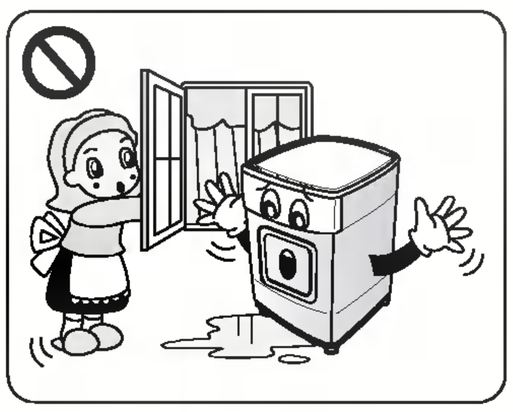

• Do not install or store the dryer where it will be exposed to the weather.

It may cause an electric shock, a fire, malfunction and deformation.

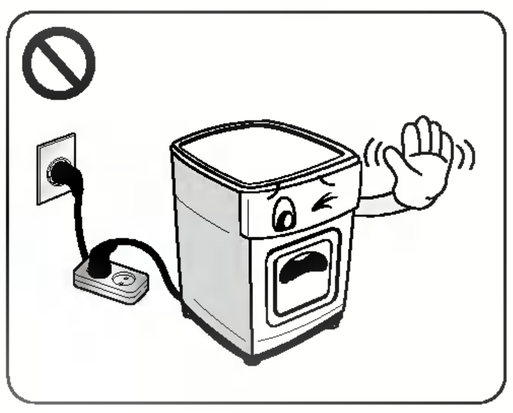

• Do not use an extension cord or an adaptor to connect the power cord.

It may cause an electric shock and a fire.

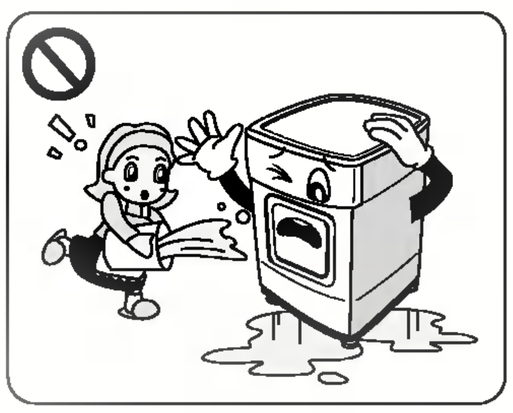

• Do not splash water on to the dryer.

It may cause a fire and an electric shock.

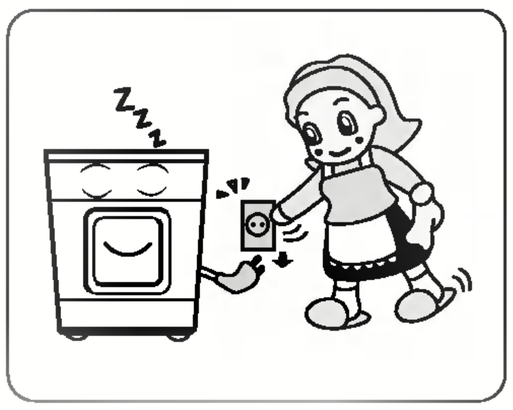

• Unplug the power cord when cleaning or not using the dryer.

Water or dirts may cause an electric shock.



• Do not allow children or pets to play on or inside the dryer.

Children may fall off. Pets or children may be wounded by rotating parts or suffocated inside drum.

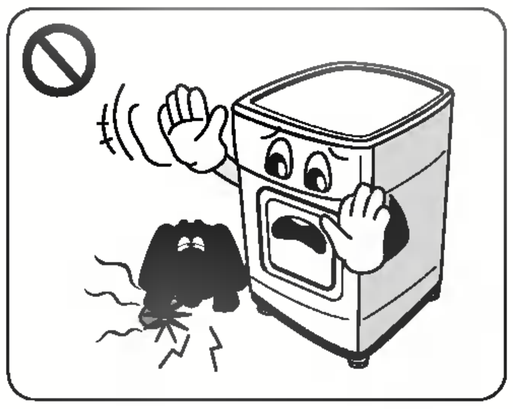

• Be sure that pets eat off the dryer.

Pets may die from an electric shock and appearance may be damaged.

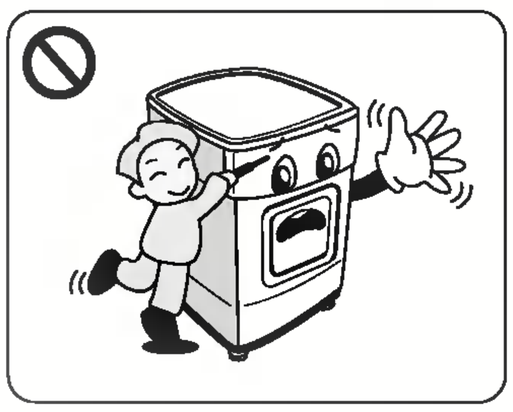

• Do not press the button with sharp edged devices like a screwdriver or a pin.

It may cause an electric shock.

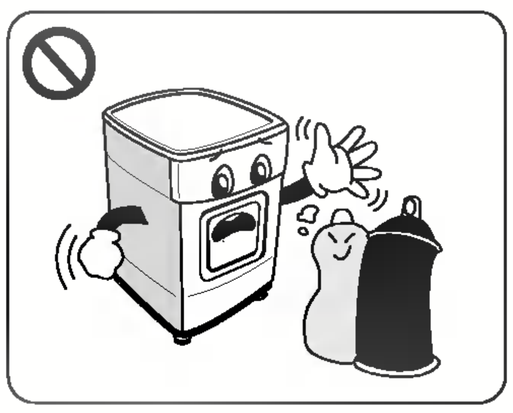

• Do not use dry cleaning detergents for the dryer or place the laundry with cleaning detergents.

It may cause an explosion and a fire.

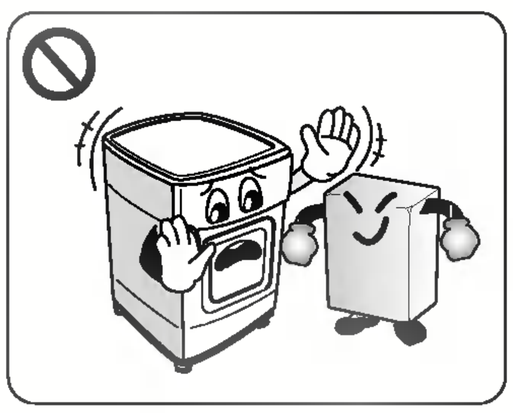

• Do not place flammable items near the dryer.

It may cause toxic gas, parts damage, an explosion or a fire.

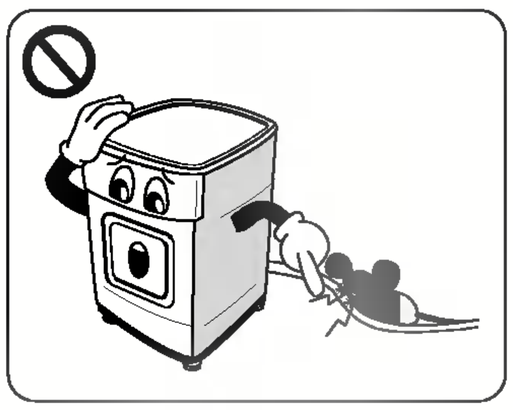

• Keep the dryer away from the reach of the cockroach and other insects.

Pets may die from an electric shock and appearance may be damaged.

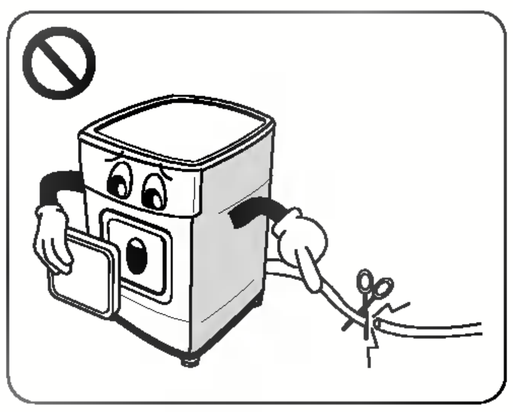

• Before the appliance is removed from service or discarded, dissemble the door cut off the power cord to prevent the future use.

It may cause cord damage and breakdowns.

afety instructions

F

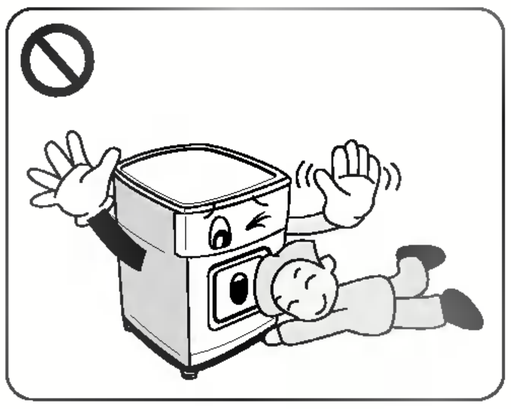

• Young children should be supervised to ensure that they do not play with the appliance.

Children may fall off. Pets or children may be wounded by rotating parts or suffocated inside drum.

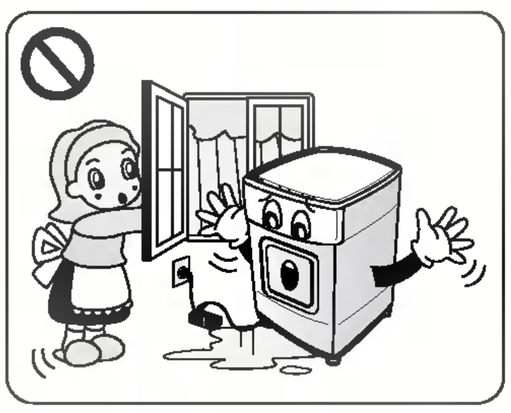

• If this appliance is supplled from a cord extension set or an electrical.
Portable outlet device must be positioned so that it is not subject to splashing or ingress of moisture.

It may cause an electric shock, a fire, malfunction and deformation.

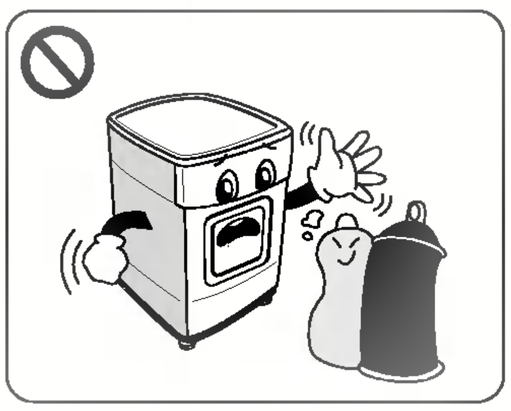

• Items that have been Spotted or soaked with vegetable or cooking oil constitute a fire hazard and should not be placed in a tumble dryer.

It may cause an explosion and a fire.

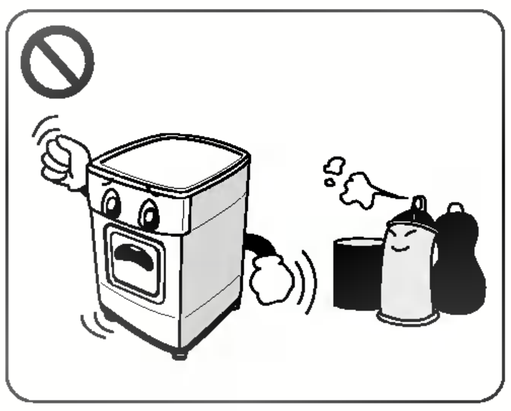

• Items that have been previously cleaned in washed in soaked in or spotted with petral/gasoline, dry cleaning solvents or other flammable or explosive substances should not be placed in a tumble dryer.

It may cause an explosion and a fire.

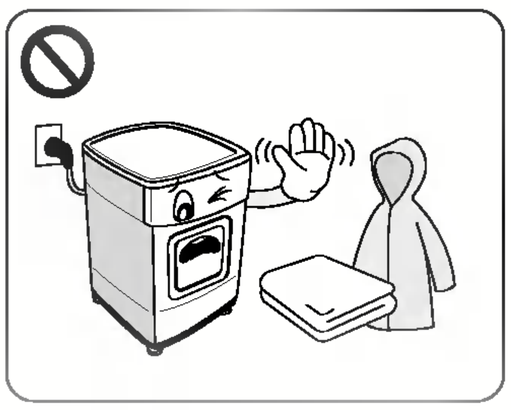

• Items containing foam rubber (also known as latex foam) or similarly textured rubber like materials should not be dried in a tumble dryer on a heat setting.

Foam rubber materials can, when heated. produce fire by spontaneous combustion.

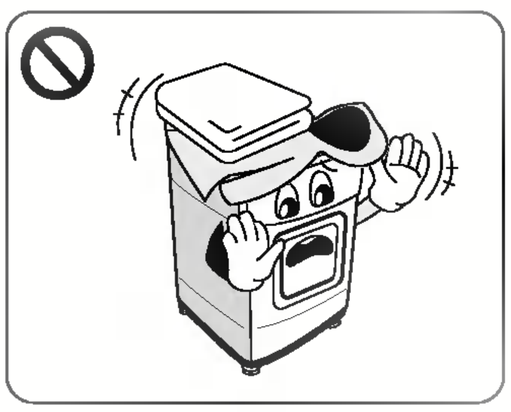

• Plastic articles such as shower caps or babies waterproof napkin covers should not be placed in a tumble dryer.

It may cause an explosion and a fire.

Installation Instructions

The following instructions will help guide you through the initial steps of setting up your dryer.
Please note that every section of this manual provides important information regarding the preparation and use of your dryer, and it is important that you review this entire manual before proceeding with any installation or use. Be sure to observe all listed warnings and cautions. These installation instructions are intended for use by qualified installers. Read these installation instructions completely and carefully.

Safety information

Risk of injury
The dryer is very heavy so you shouldn't try to lift it alone.

Do not lift the dryer by grasping any of the protruding parts e.g. or the jog dial or the door. – they may break off

Risk of tripping
Risk of tripping caused by hoses hanging down or cables. Ensure there are no loose hoses or cables.

Check the dryer for damage occurred during Transportation.
Do not connect the dryer if it has visible signs of damage.

If you are not in confidence, contact your local agent. Always empty the dryer completely before transporting it.

Your dryer should not be located near gas hob, cooker, heater or eye level grill as flames from the burners could cause damage to your dryer. When the dryer is fitted under a work surface, allow 15 mm space from each side of the dryer for air to exit the rear grille. This airflow is critical to condense the water during drying.

If you use this dryer near or stacked on top of washing machine, seperate main plugs and sockets must be used for each appliance.
Do not use 2-way adaptor or extension lead.

You can stack the dryer on top of washing machine to save the space. A stacking kit is available from your local shop.

Closet installation instructions

The LG Dryer can be placed on the top of a front loading washing machine. They are sure to be fixed with stacking kit (See the next page). This installation must be conducted by an experienced installer in order to secure robust installation of both washer and dryer. If this work is done very carelessly, dryer may fall off.
More importantly, a certain washer model has matching models for stacking so advice from the experienced installer is very critical.

Installation Instructions

GROUNDING INSTRUCTION

This appliance must be grounded. In the event of malfunction or breakdown, grounding will reduce the risk of electric shock by providing a path of least resistance for the electric current.
This appliance is equipped with a cord having an equipment grounding conductor and a grounding plug. The plug must be plugged into an appropriate outlet that is properly installed and grounded in accordance with all local codes and ordinances.

Additional Grounding Procedure

Some local codes may require a separate ground. In such cases, the required accessory ground wire, clamp and screw must be purchased separately.

Condensate Drain

The dryer can drain water without delivering to water container. Water is directly pumped out of the dryer.

Stacking Kit

In order to stack this dryer on a LG washing machine, LG stacking kit is needed.

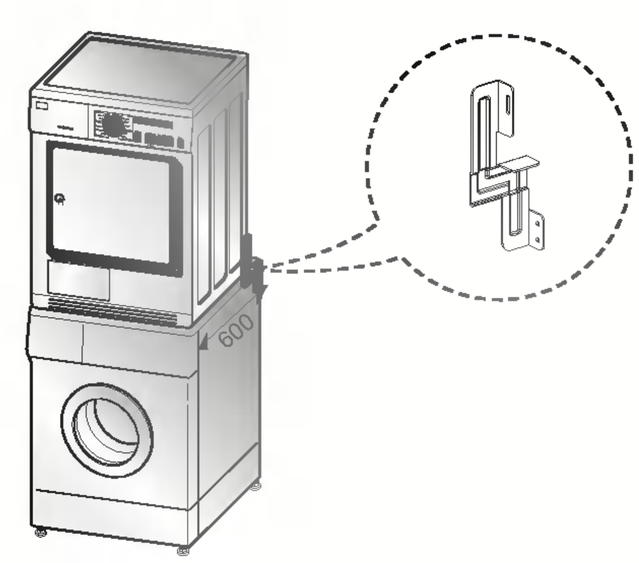

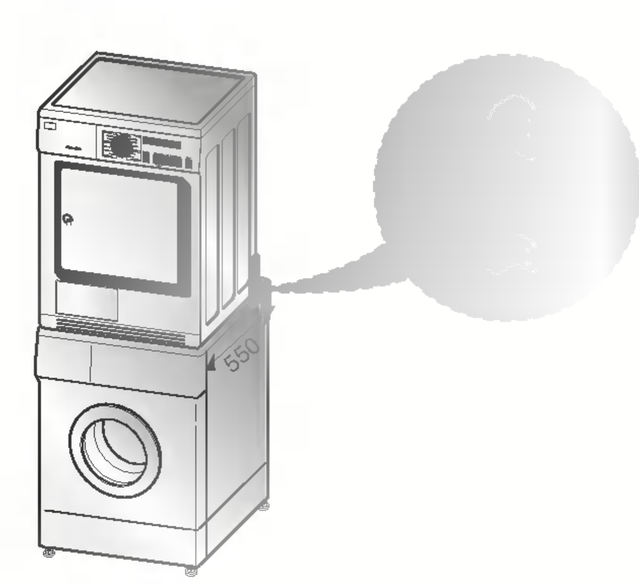

	550 mm	600 mm
Shape	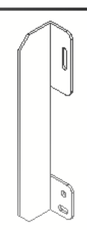	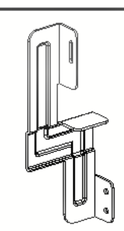

- You must use stacking kit according to your washer Top plate size

In order to stack this dryer on LG Washing machine, you must purchase the LG stacking kit that is fitted by LG washing machine top plate size.

Installation Instructions

F

Level the dryer



1. Levelling the dryer is to prevent undesirable noise and vibration.

When placing your dryer in an solid and level area where water is not dripping and freezing, flammable materials are not stored.

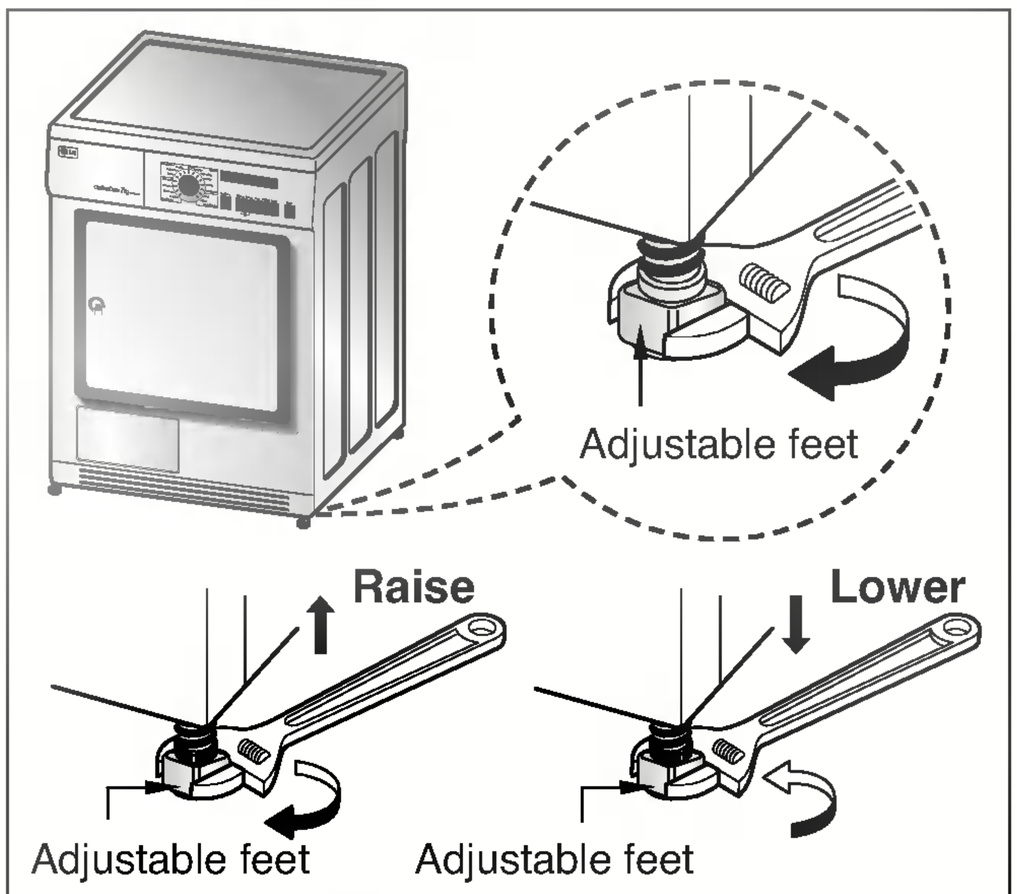

2. If the dryer is not properly level, adjust the front levelling legs up and down as necessary.

Turn them clockwise to raise and counterclockwise to lower until the dryer is not wobbling both front-to-back and side-to-side.

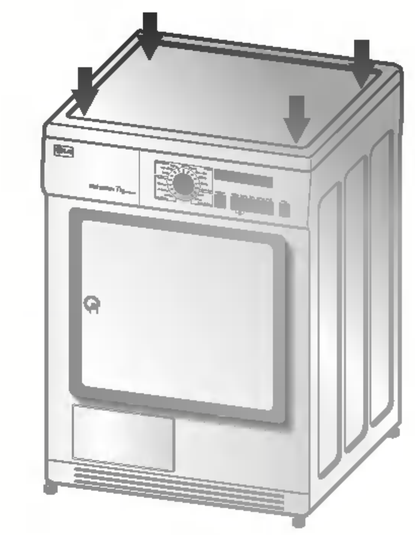

※ *Diagonal Check*

When pushing down the edges of the washing machine, the machine should not move up and down at all. (Please, check both of two directions)

If machine rocks when pushing the machine top plate diagonally, adjust the feet again.

Appearance & design

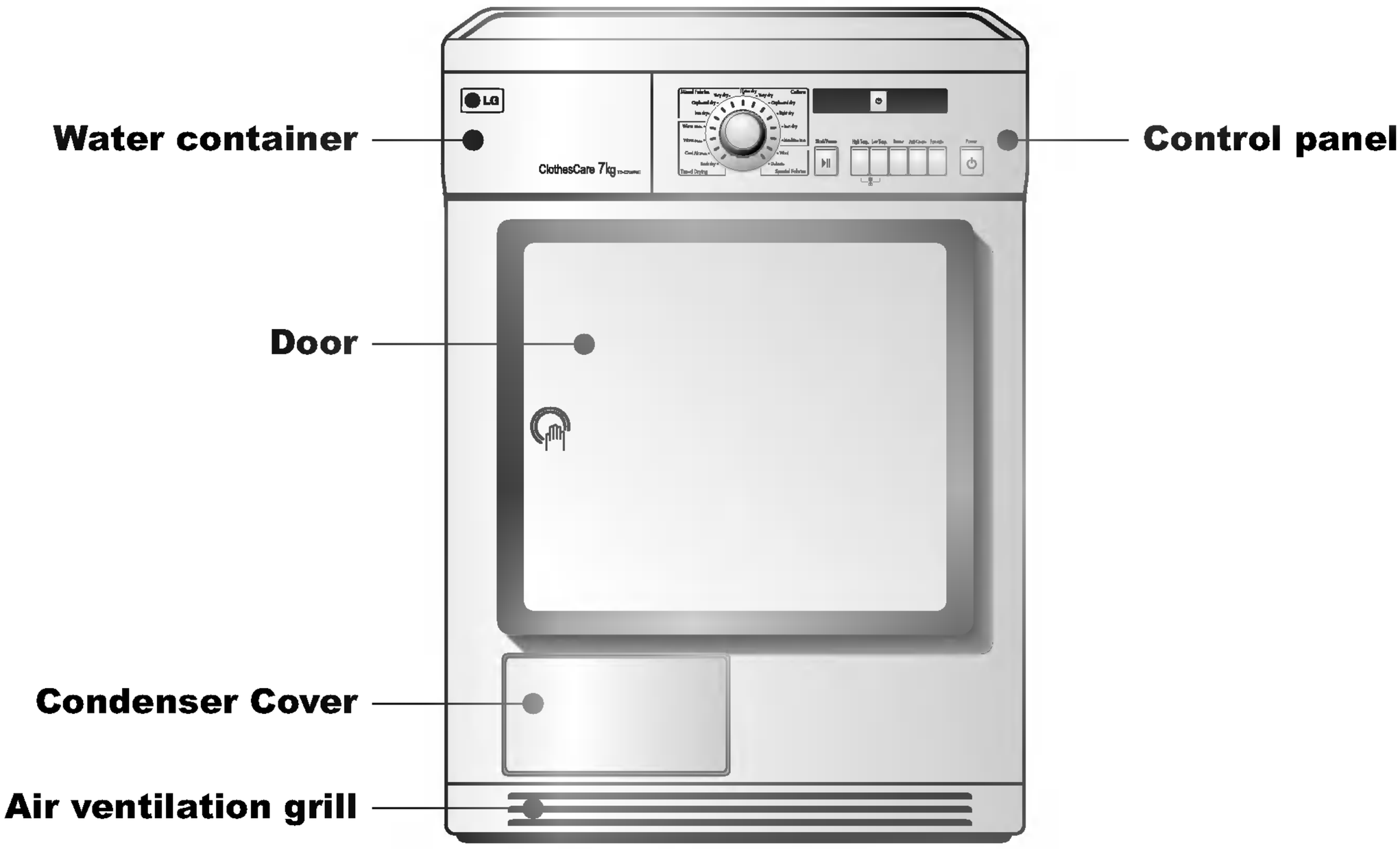

Control Panel

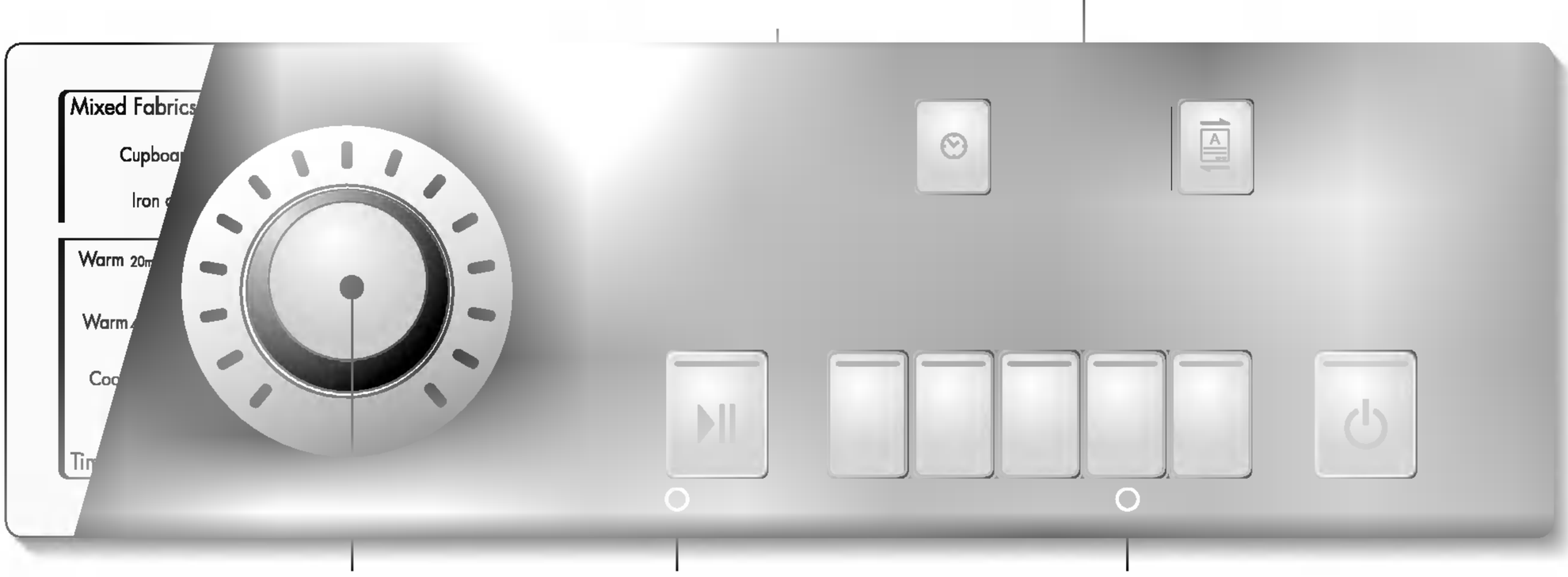

Operating your dryer

F

Cycle Selection Table

Electronic Auto Dry Cycles		Standard Program
Mixed-Fabric cycles **(Note) press the "Low Temp." button for heat-sensitive items**		
Bed linen and table linen, tracksuits, anorak, blankets	For thick and quilted fabrics which do not need to be ironed.	Very Dry
shirts, blouses and sportswear	For fabrics which do not need to be ironed.	Cupboard dry
Trousers, dressers, skirts, blouses	For fabrics which do need to be ironed.	Iron Dry
Cotton (Whites and coloreds) **(Note) press the "Low Temp." button for heat-sensitive items**		
Towelling, dressing gowns and bed linen	For thick and quilted fabrics.	Extra Dry
Terry towelling, tea towels, towel, bed linen	For thick and quilted fabrics which do not need to be ironed.	Very Dry
Bath towels, tea towels, underwear, cotton socks	For fabrics which do not need to be ironed.	Cupboard dry
T-shirts, trousers, underwear, work clothes	For fabrics which do need to be ironed lightly, not completely.	light Dry
Bed linen, table linen, towels, T-shirts Polo shirts and work clothes	For fabrics which do need to be ironed.	Iron Dry
Bed linen, table linen, towels	For fabrics which do need to be pressed.	Machine Iron
Time Cycles for selected length of time		
Bath towels, bath robes, dishclothes, Quilted fabrics made of acrylic	Small clothes & pre-dried laundry Normal Normal fabrics using hot temperature for 20minutes	Warm (20min.)
	Small clothes & pre-dried laundry Normal fabrics using hot temperature 40minutes	Warm (40min.)
All fabrics needing freshing, tumbles without heat		Cool Air (20min.)
sweater, delicate, fabrics, sportshoes	For the fabrics you do not want tumble dry.	Rack dry
Special Fabrics		
Wool	For wool fabrics.	Wool
Silk, Women's thin clothes, lingerie	For fabrics which are heat-sensitive like synthetic fabrics.	Delicates

CAUTION !

Your wool should be used in Wool program and heat-sensitive fabrics including silk, underwears, lingerie should be used in delicates courses.
Otherwise, these clothes can cause undesirable drying results.

Operating your dryer

Before first use of the dryer

※ Before you use the dryer for the first time, there are some points that you have to check.

After removing package, you will check the product has no problem and is properly installed.

1. Check the dryer is well balanced by using a leveller. In order to check this, you can see and adjust legs which are suppose to stay put.
2. Check some major parts such as water container, condenser, control panel and drum.
3. It is needed to operate 5 minutes drying to make sure drum inside gets warm.
4. In the early use of dryer, please leave it with door opened and power unplugged after operation to get rid of probable smell inside.

1. Turn power on.



First, press the "Power" button. The indicator light above the button will become illuminated indicating that the machine is all set to run.

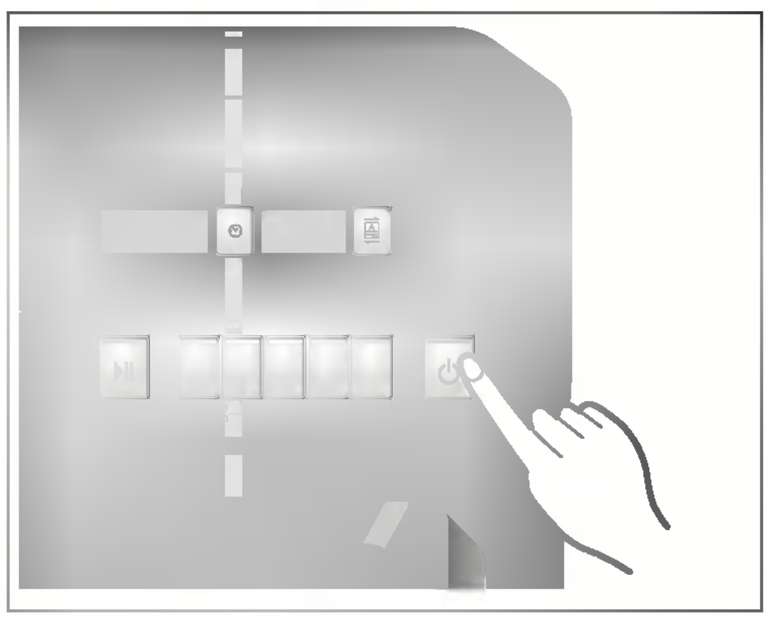

Turn on.

2. Open the door.

3. Check the lint filter, water container and condenser.

The lint filter near the door, should be emptied after or before drying operation.
Open the door and check if lint filter is cleaned.
If not, please clean it referring to page 15.
Water container and condenser are also checked to be emptied and cleaned for better drying result.

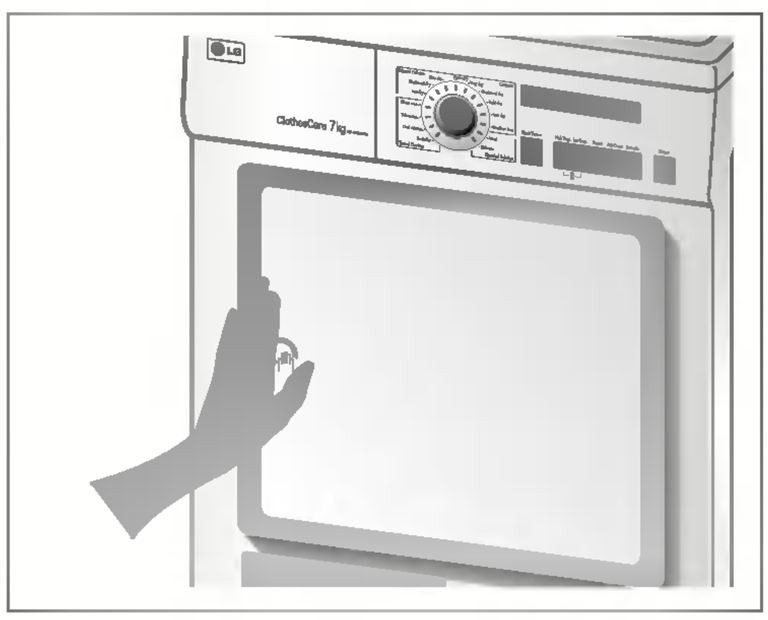

Open the Door.

4. Place laundry into the drum after sorting.

The clothes should be sorted by its fabric type and dryness level and all the strings and belts of clothes should be well tied and fixed before being put into the drum.
It is desired that you push laundry all the way back to keep it away from the door seal.
If not, door seal and clothes may be damaged.

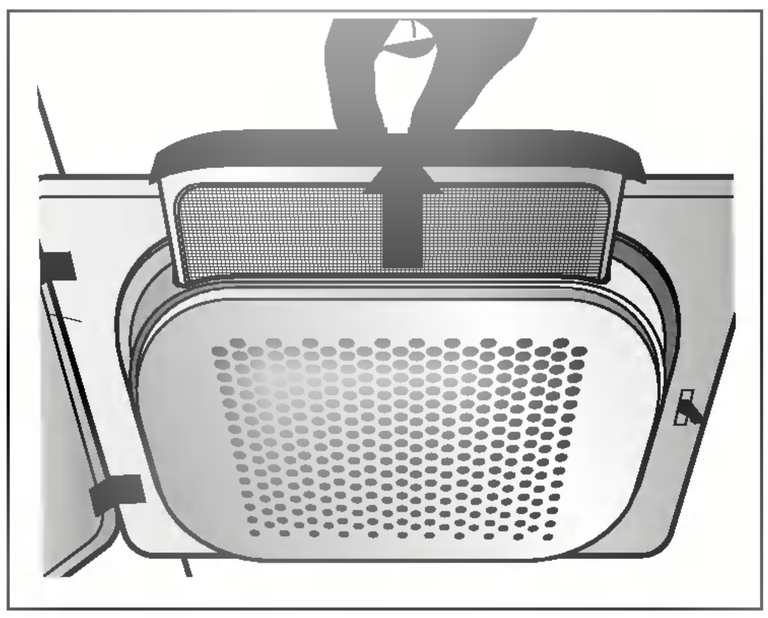

Check the lint filter.

perating your dryer

5. Close the Door.

Before you close the door, make sure fabrics are well placed inside and that foreign objects, especially flammable ones, are not caught around door.

6. Select the Drying Cycle you want.



You can choose a cycle by turning the program control knob until the required program reaches to its indicator.
If you only press Start/Pause button without choosing any cycle, the dryer will proceed with the Cupboard program.
[Please refer to following Cycle Selection table (page 10) for the detailed information]

7 . Press the Start button.



You can hear drum rotating.

8. After operation is completed, open the door and remove the laundry.

Careful! the drum inside could be still hot.
(Operation time varies depending on your cycle selection or options.)

9. Clean the Lint Filters and empty water container.

The lint filter should be cleaned after each load.

10. Turn off the Dryer.

Press the "Power" button.

CAUTION !

- Be careful of the fact that filter should not be torn when using a vaccum cleaner. If there is a little residue buildup on filter, you can scrub lint screen with the brush to remove.
- If you want to open the door while dryer is operating, please press the Start/Pause button first, wait until drum completely stops and then open the door.

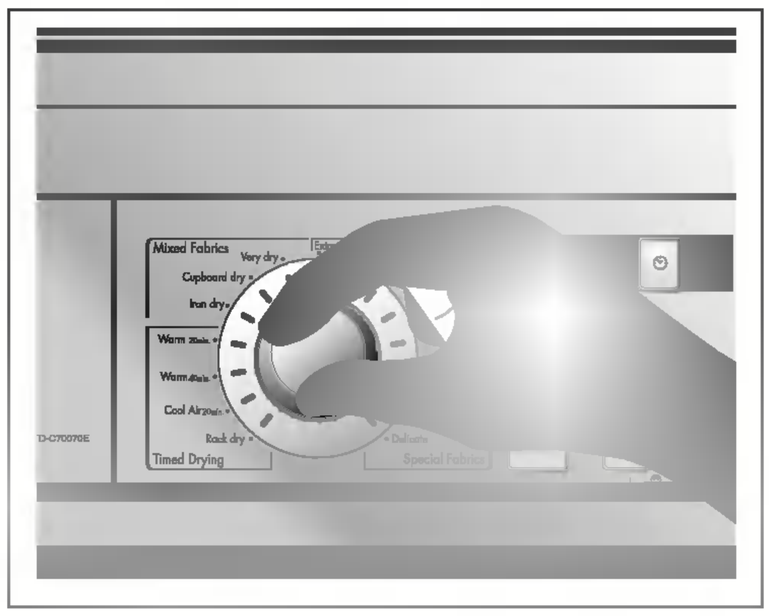

F

Select the desired Cycle.

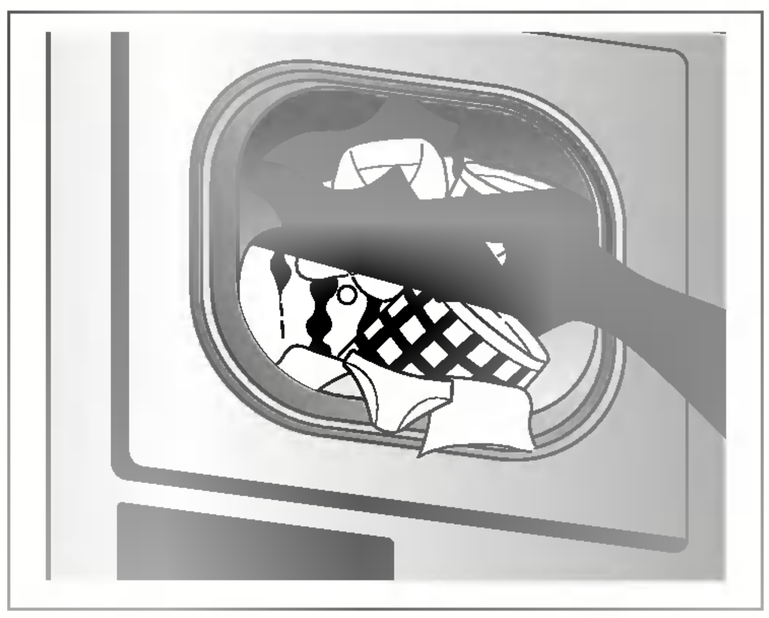

Take out the laundry.

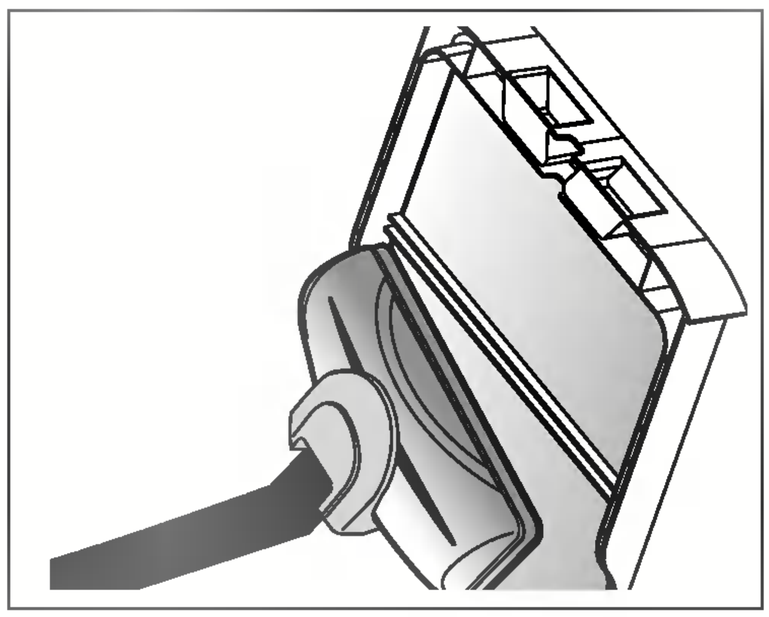

Clean the door lint filter.

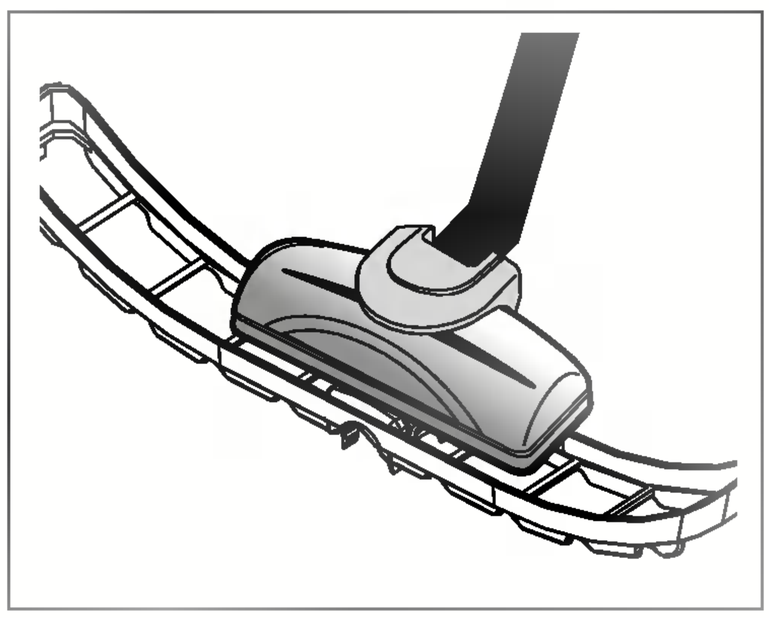

Clean the lower lint filter.

Operating your dryer

F

Rack Dry

The dryer Rack is placed inside the dryer like the picture.
Remove and discard packing material before use,
The Rack Dry is designed for use with items that
you do not want to tumble dry including sweaters and
delicate fabrics.

Check the lint filter and remove any lint accumulated from items dried on the Rack.

To use the Rack Dry :

1. open the door.

2. Do not remove the lint screen.

3. Place dryer Rack over the bottom of the dryer door opening.
Reset the Rack on the dryer back lodge.
Push down on the frame front to secure over lint screen.

4. Place wet items on top of the Rack.
Allow space around items for air to circulate.
The Rack does not move, but the drum will rotate.

5. Close the door.

6. Select Rack Dry.



1. Insert wire edge to the drum center.

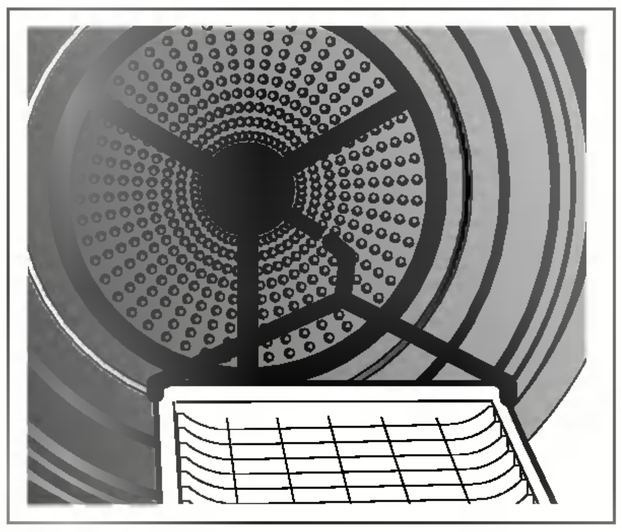

2. Place delicate fabrics or athletic shoe.

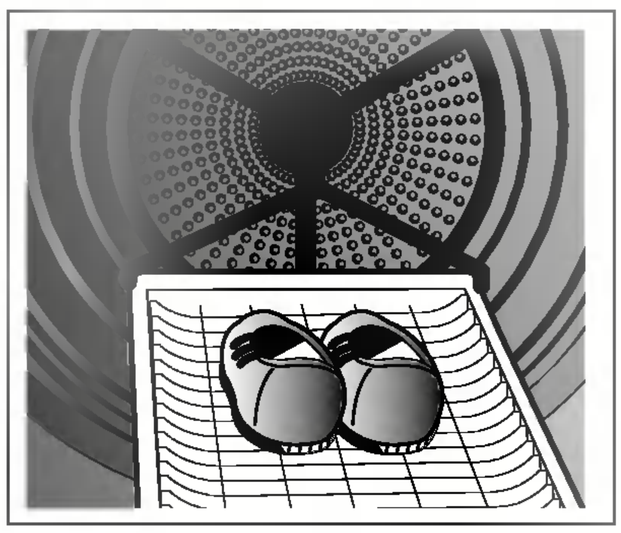

dditional Functions

F

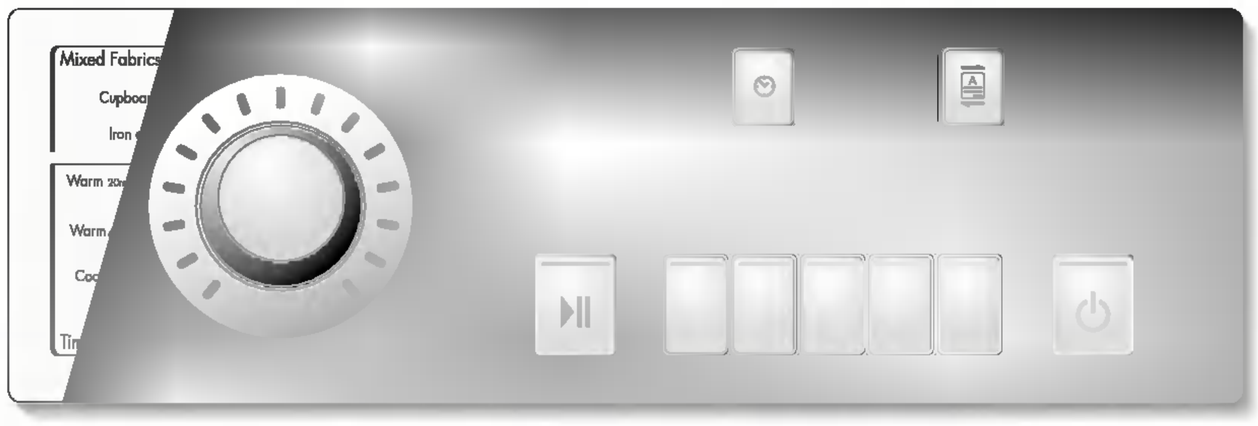

High Temp. / Low Temp.

These are functioning to shorten or lengthen the cycle time by increasing or decreasing temperature.

Buzzer



This is about buzzer sound on/off.
After power is on and you select cycle, buzzer will sound when you press a certain button on the panel.
If you don't like to hear that sound, just press Buzzer button. The Buzzer is then turned -off.

Anti-Crease

Anti-Crease is functioning to prevent creases and rumples that are formed when the laundry is not unloaded promptly at the end of drying cycle. In this function, the dryer repeatedly runs and pauses to the cycle end.

If the door is open during Anti-Crease process, this function is cancelled. But in case of door open during normal operation without selecting Anti-Crease, this function will be remembered and processed.

Favourite



If there is some cycle you would like to make based on your own drying habit, use "Favourite". Once favourite cycle is stored, you can repeatedly use next time before changing the stored setting. For instance, you turn power on and select Extra Dry in Cotton Cycle and Low temp and Anti-Crease in series and then lastly press "Favourite" until the dryer beeps. It's about 3 seconds. That's all you have to do. The next time, when turning the dryer on and pressing "Favourite" you can see the above options you select displays on the panel. favorite programme is set. this functioncan be set with The dryer on or paused. To use this function, press and hold button hold button down for 3 sesconds.

Time Delay ( )



You can use the Time Delay function to delay the finishing time of drying cycle.
Maximum Time Delay is 19 hours.
1. Turn the dryer on
2. Select cycle
3. Set time delay hour
4. Press Start/Pause button

Child Lock



For the safety of your children, press High Temp. and Low Temp. buttons at the same time for about 3 seconds. You can check this function by seeing the dryer display "Child Lock on" and Child lock mark on LCD window.

1. When the power is on, press the language change button around 3 seconds. ( ).

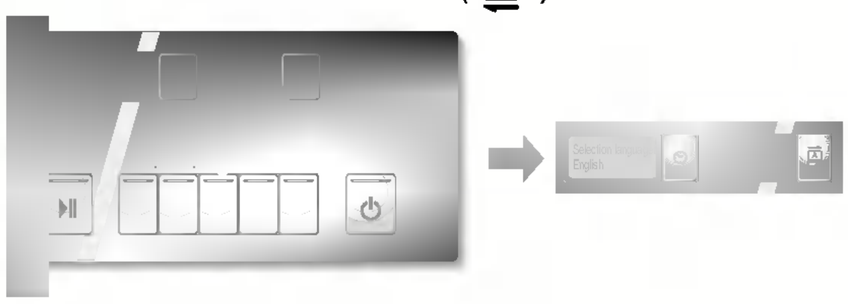

2. Turn the program dial to select the language.

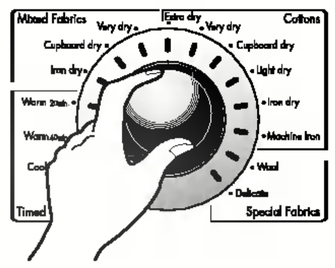

3. The language is finally selected by pressing the language change button ( ).



4. Power will be off automatically, after changing language.

5. Confirm the selected language after power on again.



aring for your dryer

F

How important Care and cleaning is~

It's not very difficult to care for your dryer. All you have to do is to follow the information below.

Clean Lint Filter



Clean lint filter after each use and check it before each use. It should also be cleaned if the "Clean the Filter" message and clean filter sign becomes illuminated and the buzzer sounds during operation of the dryer: Cleaning or emptying the filter will reduce drying times and energy consumption and lengthen the dryer life.

1. Open the door.

2. Pull the filter out.

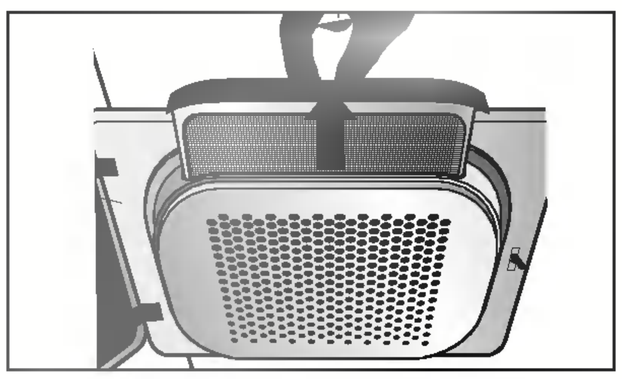

3. Clean the filter by using a vacuum cleaner or rinsing under the tap.

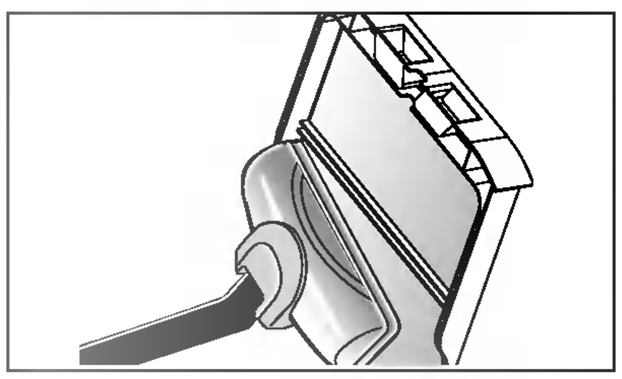

4. Replace the filter.
- Push the filter all the way down to avoid Interference with the door.

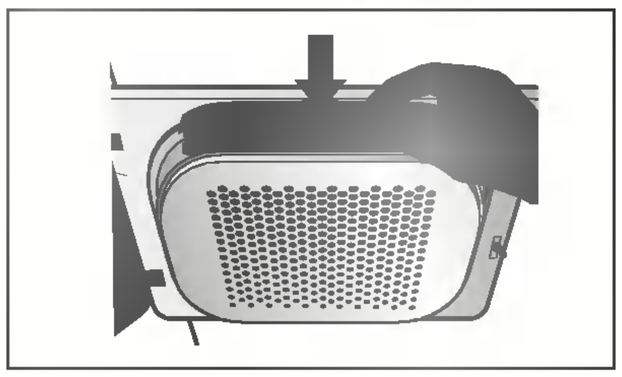

5. Clean the lower lint filter.

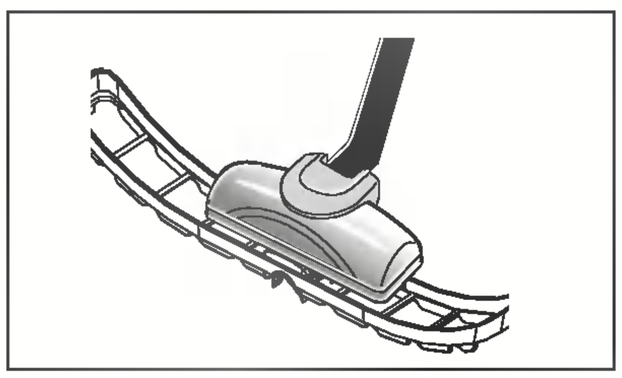

6. Close the door.

Wash the lint screen in warm, soapy Water. Dry thoroughly and replace.

Clean lint filter during a cycle

If 'Clean the Filter" display during operation, clean the filter promptly.

1. Cool the dryer down and follow the mentioned steps.
2. Press the Start/Pause button.

Empty Water container



Condensed water is collected to water container. You should empty the water container after every use. Not doing this may result in improper drying performance.
If water container is full, You can see the message in LCD window and a buzzer sounds while the dryer is operating. In this case, water container must be emptied in 1 hour.

1. Draw water container out.

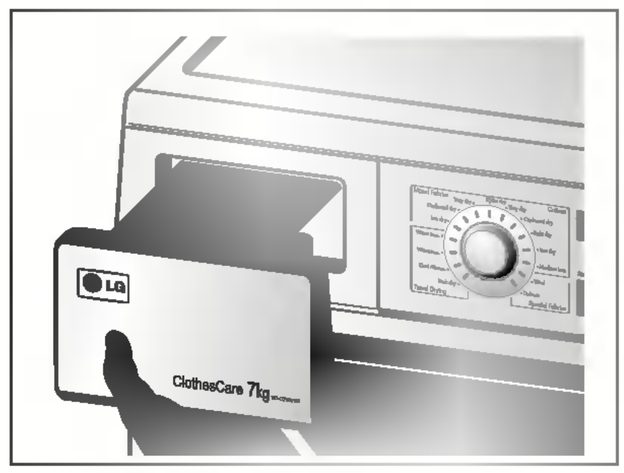

2. Empty water container to sink.

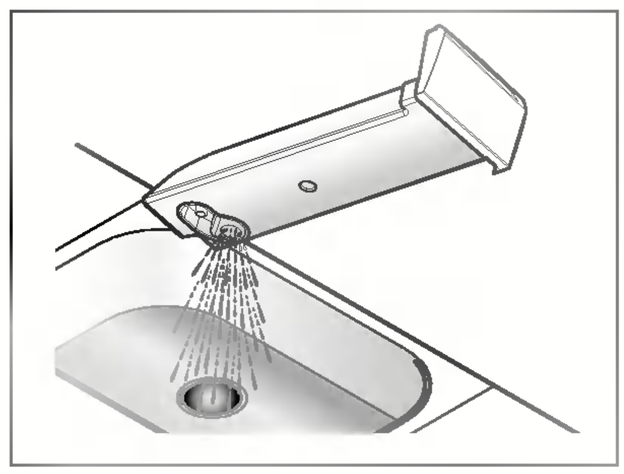

3. Push it back.

4. Press the Start/Pause button.

aring for your dryer

F

Condenser

Condenser is also a very important part for efficient drying performance result so it needs a special care from you.
It is recommended that condenser be cleaned three or four times a year.

1. Open condensing cover by using a coin or flat blade screwdriver.

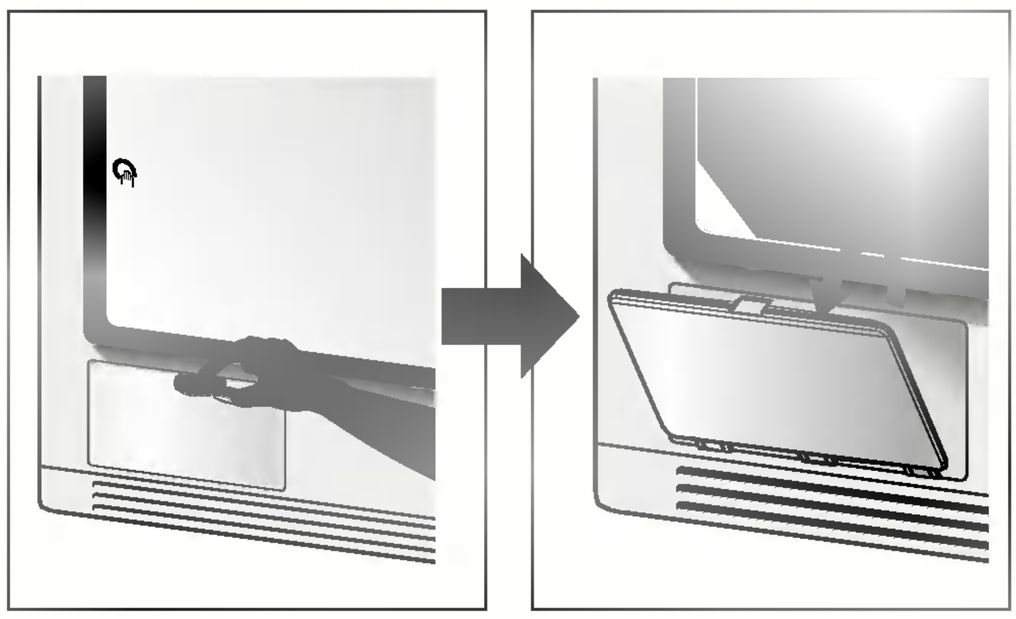

2. Open sealing cover by turning a locking lever.

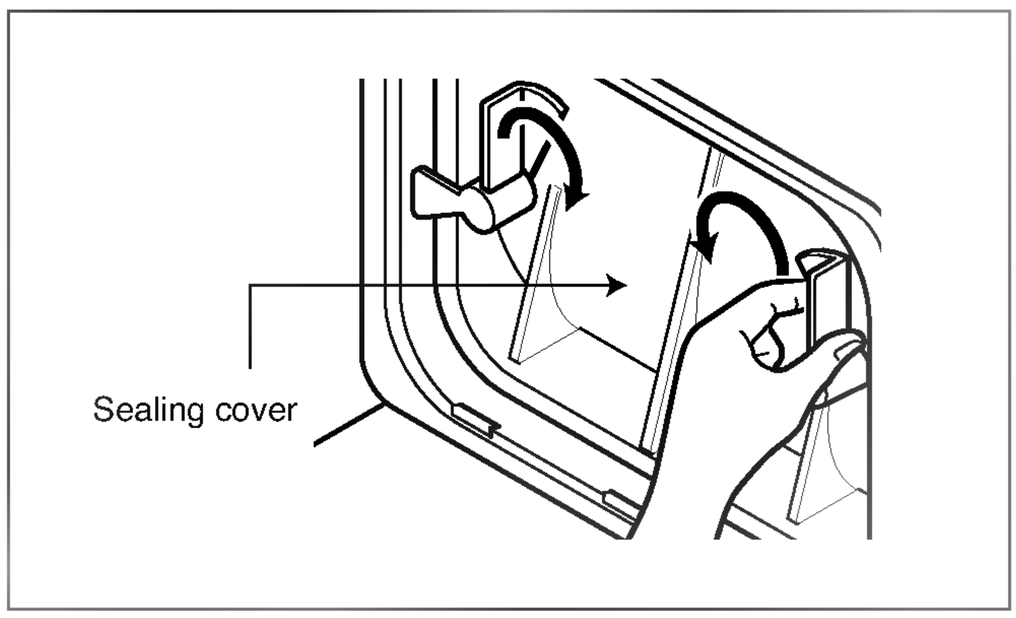

3. Release the both locking levers turning towards each other.

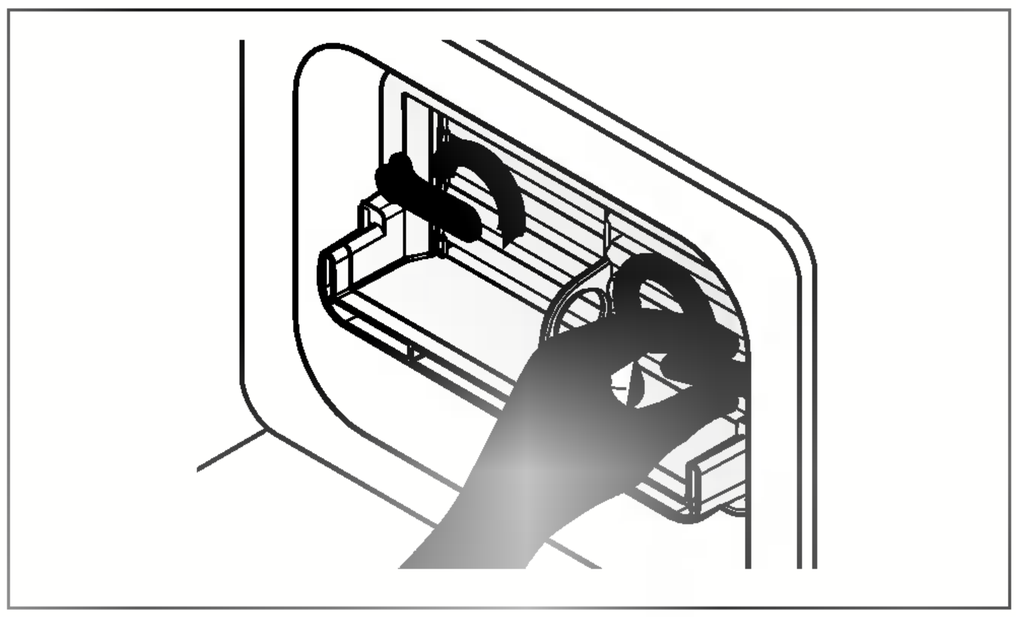

4. Draw the condenser out by inserting a finger into a hole down the front of condenser.
(Don't forcefully treat condenser.)

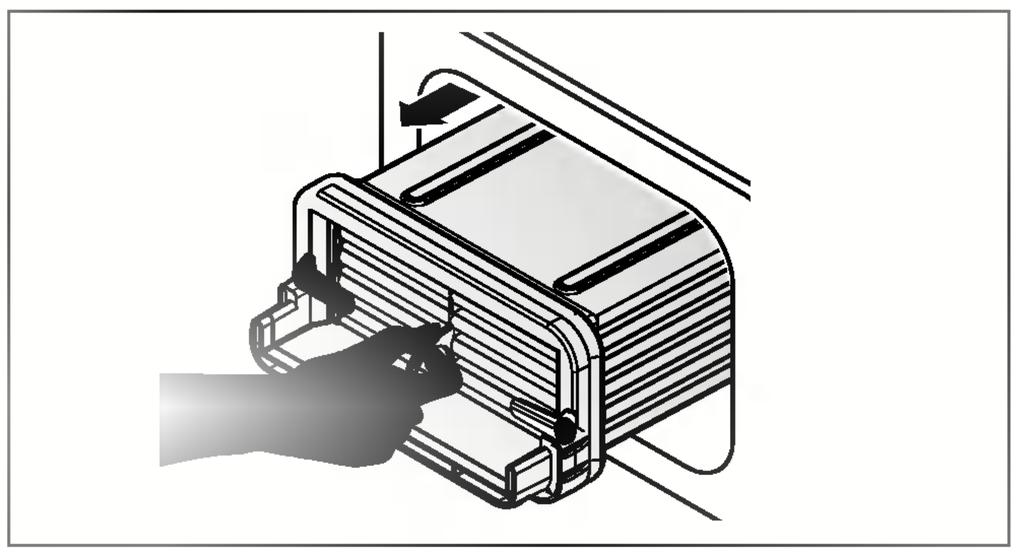

5. Clean the condenser completely under the tap letting water to flow through.

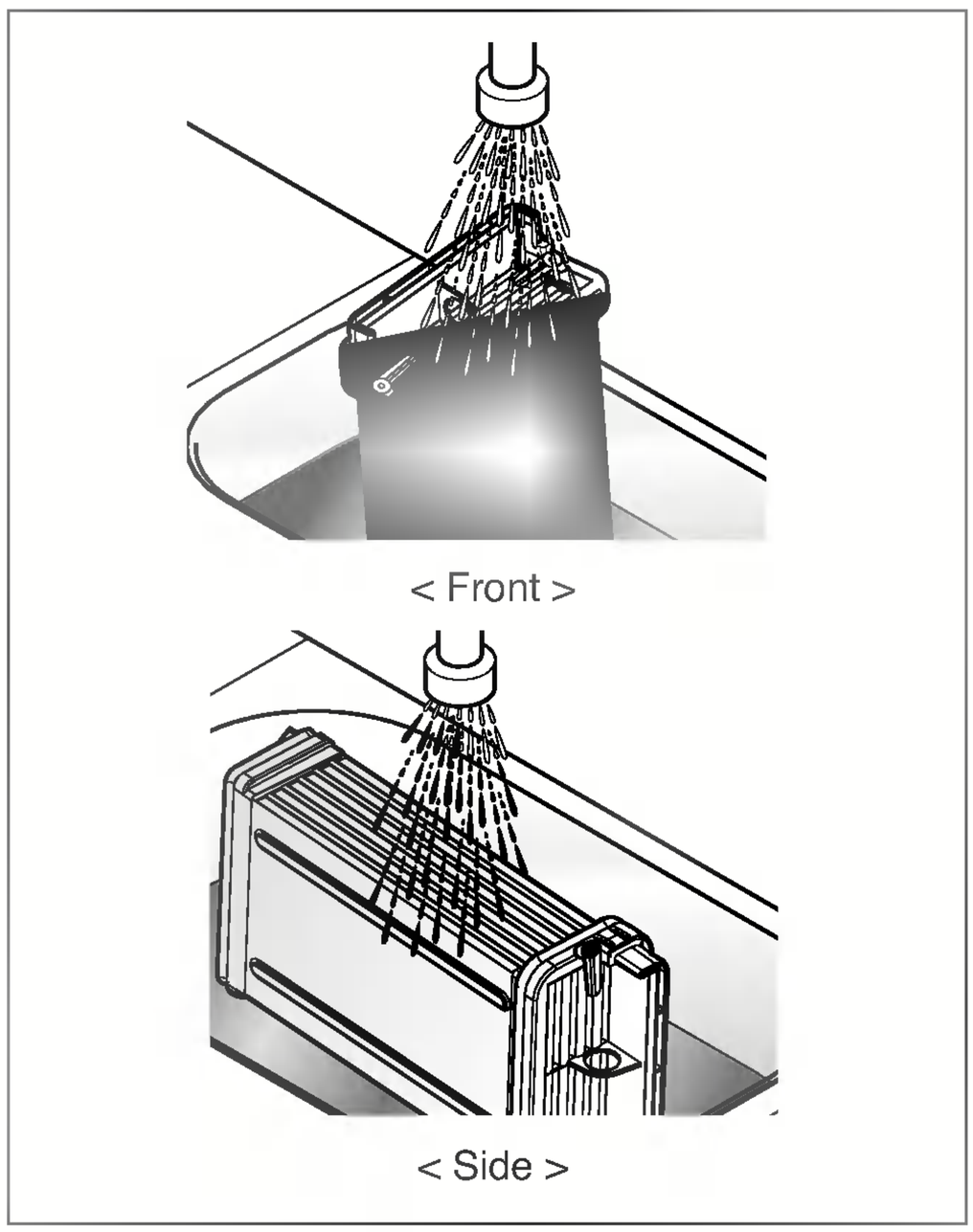

6. Close all with the reverse order of opening.

aring for your dryer

F

Front Ventilation Grille

Vacuum the front ventilation grill 3~4 time a year to make sure there must be no build-up of lints or dirts which cause improper intake air flow.



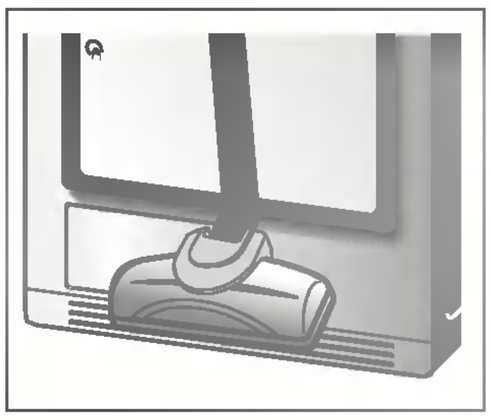

Moisture Sensor?

This device functions to sense the moisture remaining contents of the laundry during operation which means it must be cleaned all the time. The main reason of cleaning this part is to remove the build-up of lime scale on the surface of sensor. Wipe the sensors inside drum (Shown in the picture).

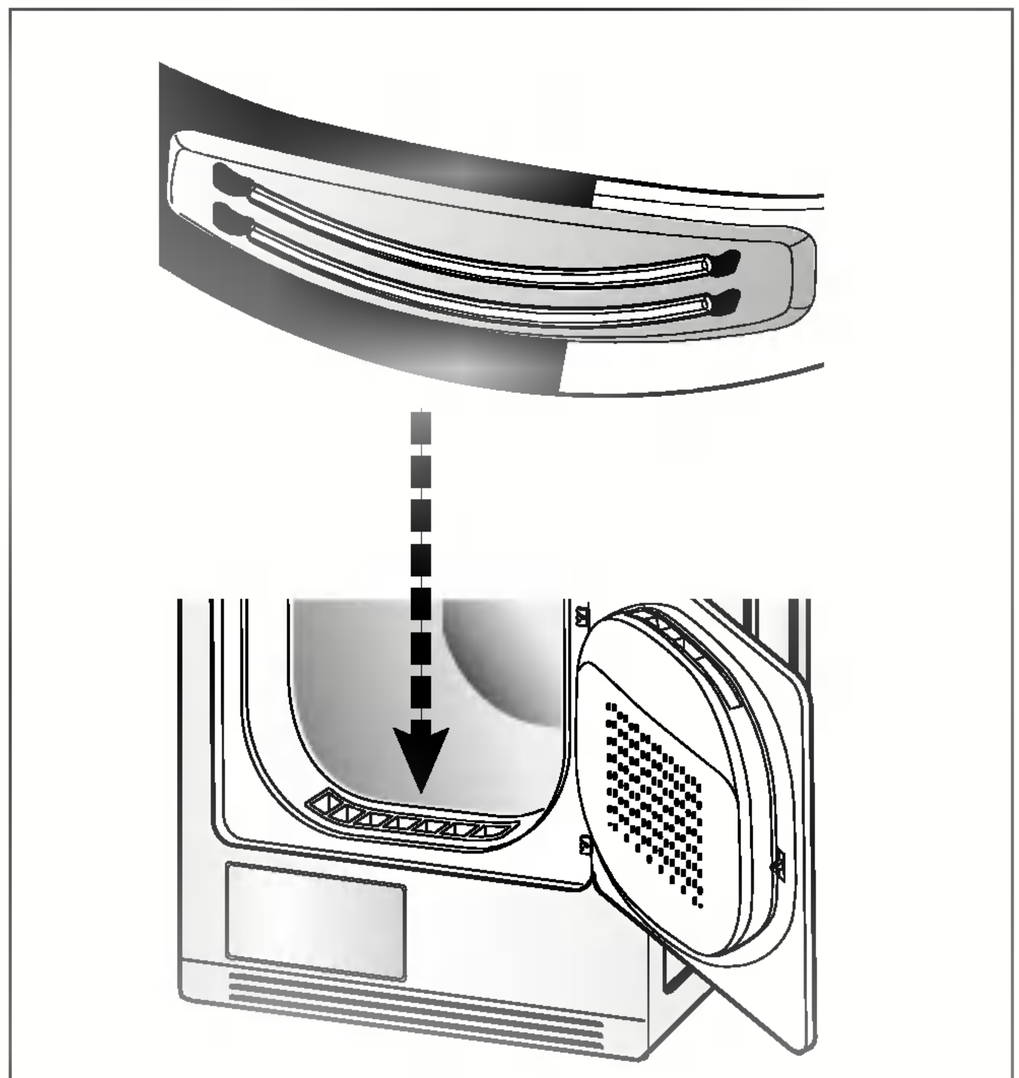

Condensed water Drain-out

Normally, condensed water is pumped up to water container where water is collected until emptied.

Not only using water container, but water can be drained out directly to drain hose especially when dryer is stacked on top of washing machine.

With connecting kit for drain hose, you can simply change water path and water reroute to the drainage facility.

Please follow the below steps.

1. Unscrew cover.

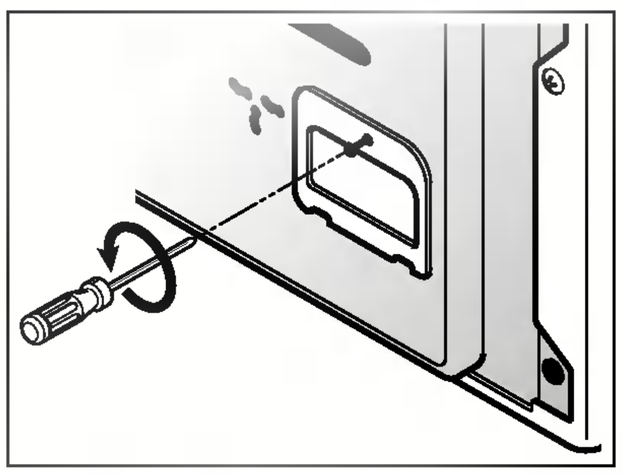

2. Take connecting kit out.



3. Separate water container hose from the kit.

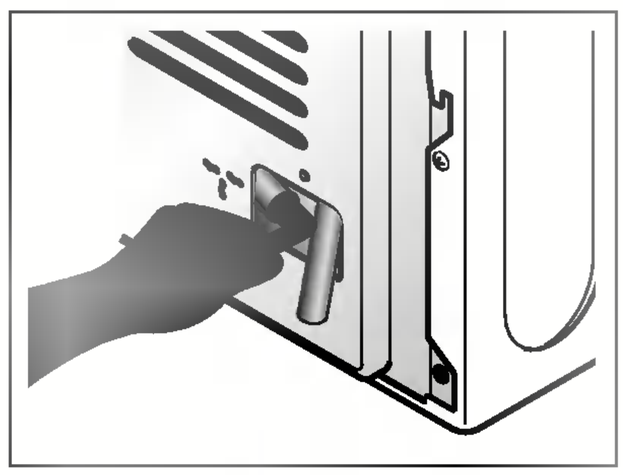

4. Connect drain hose to the kit.

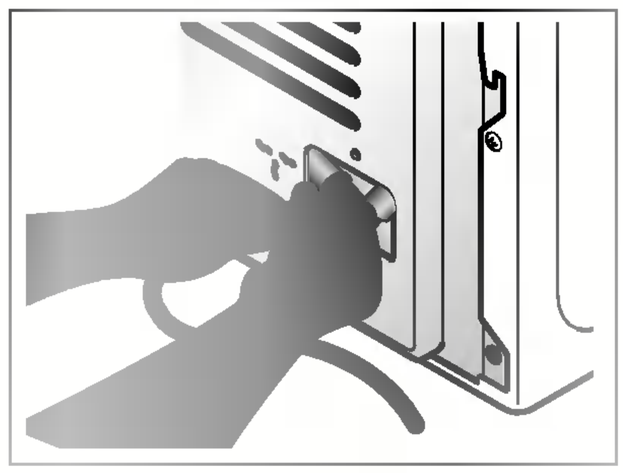

aring for your dryer

Reverse the door

The door can be reversed to fit to your own installation conditions. From the factory, the door hinge is located on the right side.

1. This work may cause the injury of your hands so you must be careful to handle some sharp devices like tork screwdriver or slotted screwdriver.

2. When the door is revered, the hand sticker on the door also must be replaced.

Do not use a machine screwdriver.

1. Unscrew the bottom hinge of the door first and top hinge. And then place on the blanket to prevent scratches.

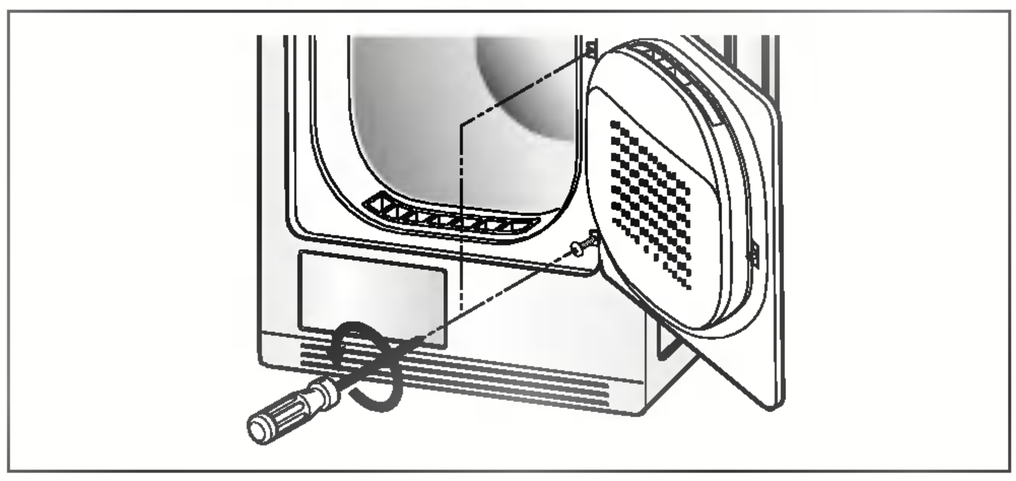

2. Remove the door lock cover.

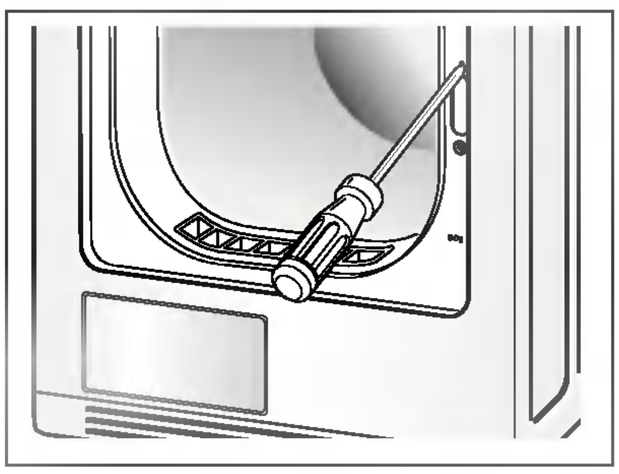

3. Remove the door lock and replace where door lock cover is located.

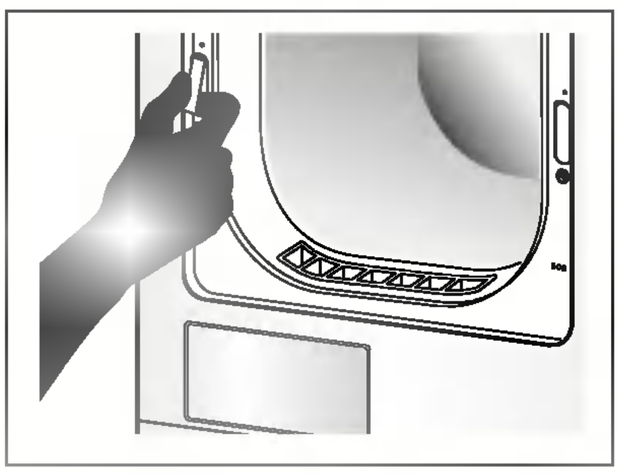

4. Detach both hinge point covers.

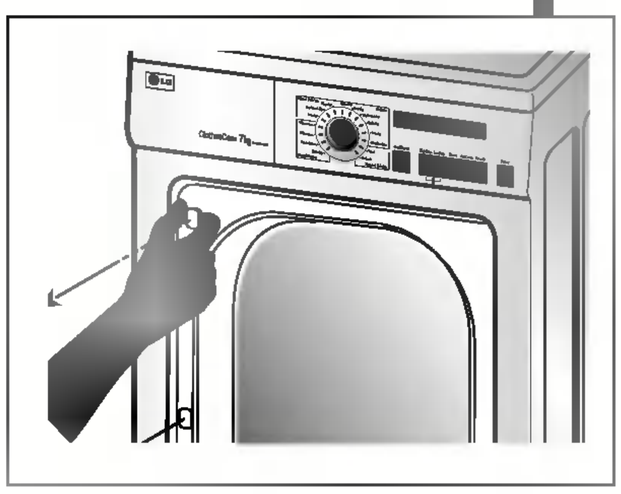

5. Unscrew two door hinges.

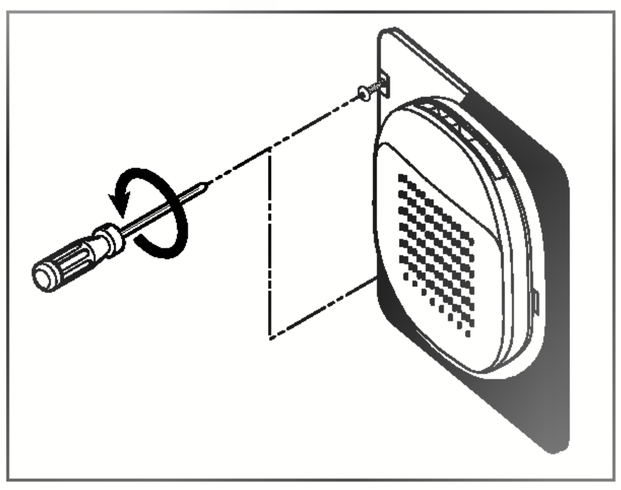

6. Replace both hinge point covers where door hinge is located.

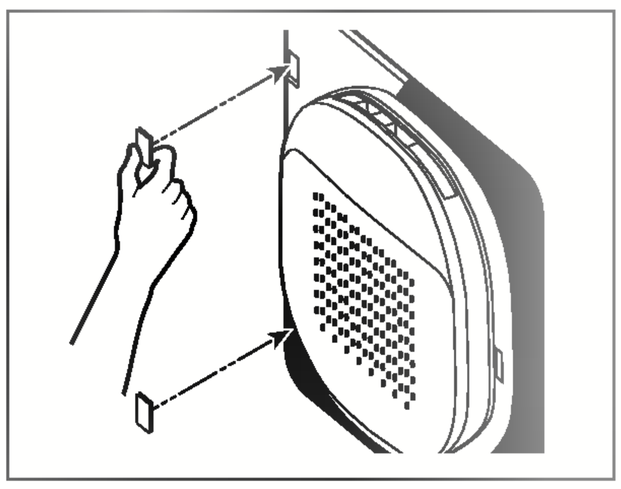

7. Replace the door catch to the reverse location.

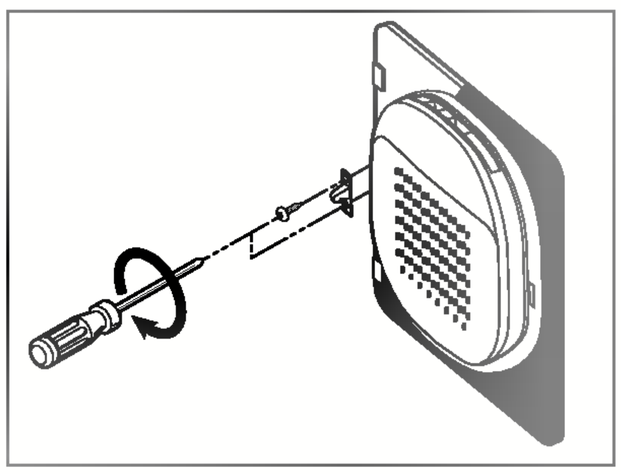

8. Screw the door hinges.

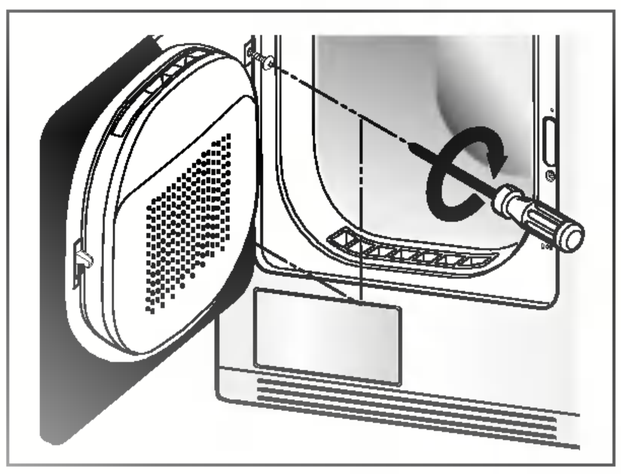

aring for your dryer

F

Change the Bulb

The bulb itself could be very hot when the dryer just finishes its operation. So before changing the bulb, be sure that the inside of the drum is cool down.

1. Open the door, put a hand into the drum and grasp a bulb cover.

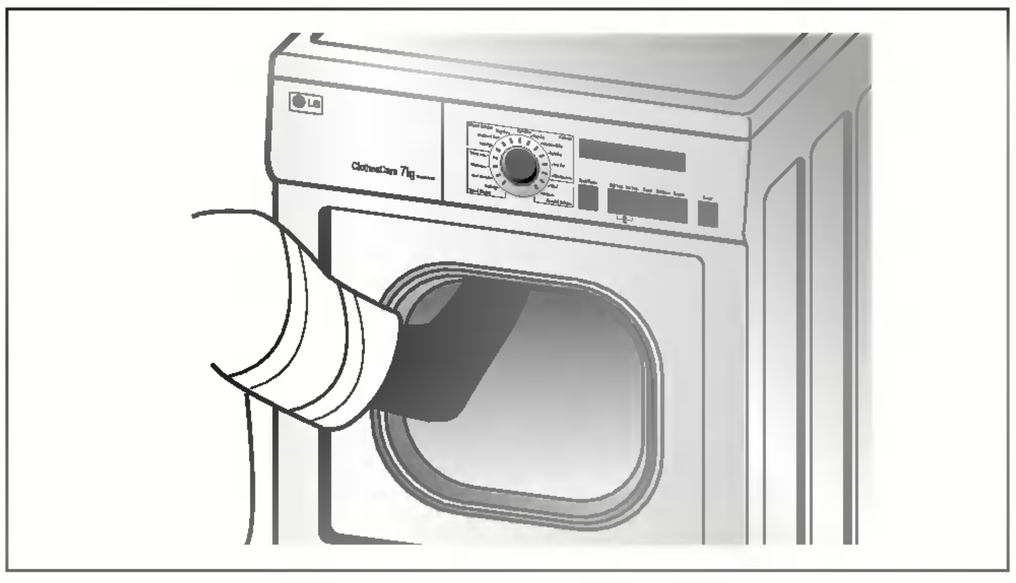

2. With bulb held by a hand, turn the bulb to the clockwise direction with a certain amount of force.

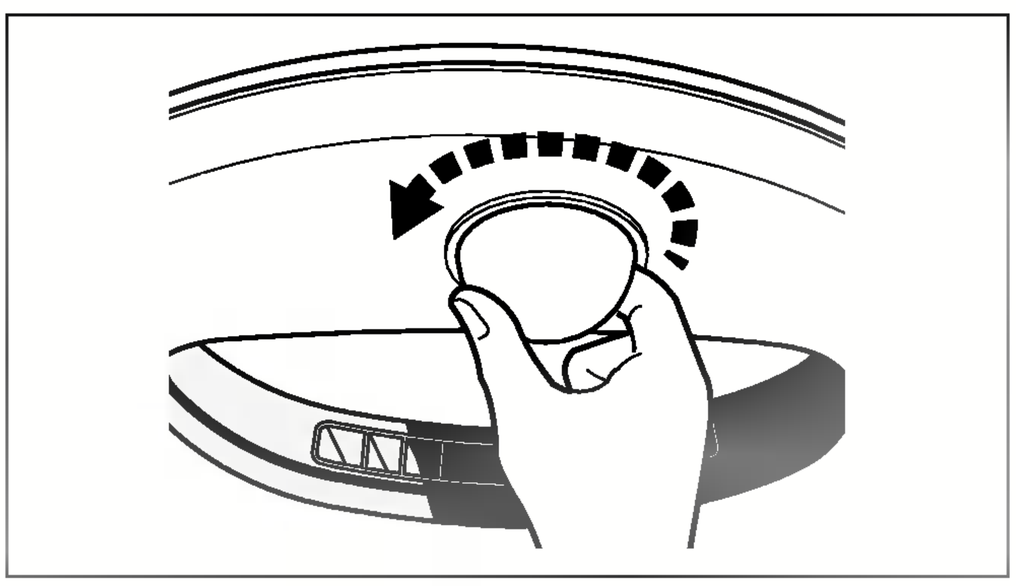

3. Seperate bulb cover from the socket housing.

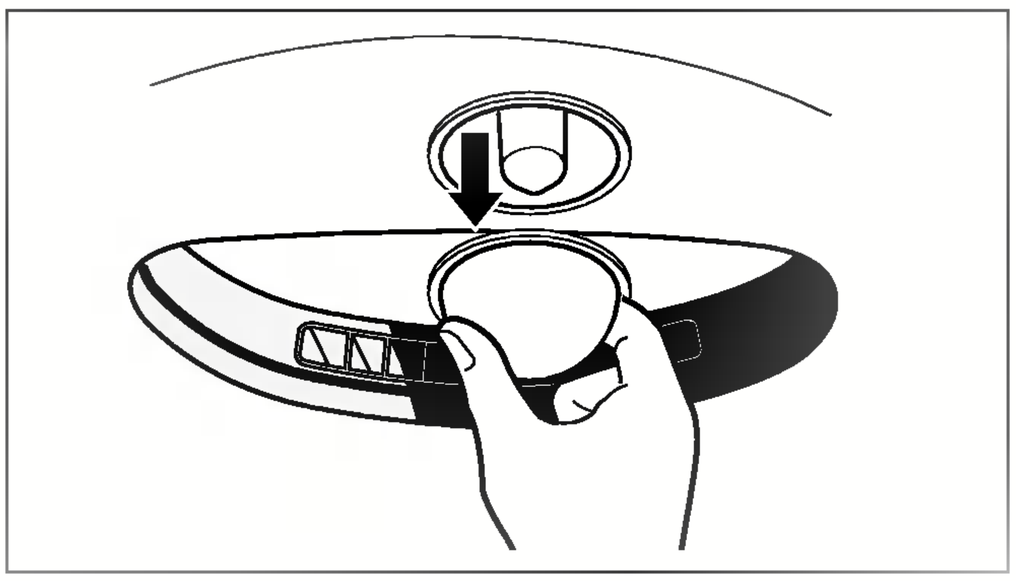

4. Remove the current bulb turning it to Counter clockwise direction.
Be careful that it does not fall off.

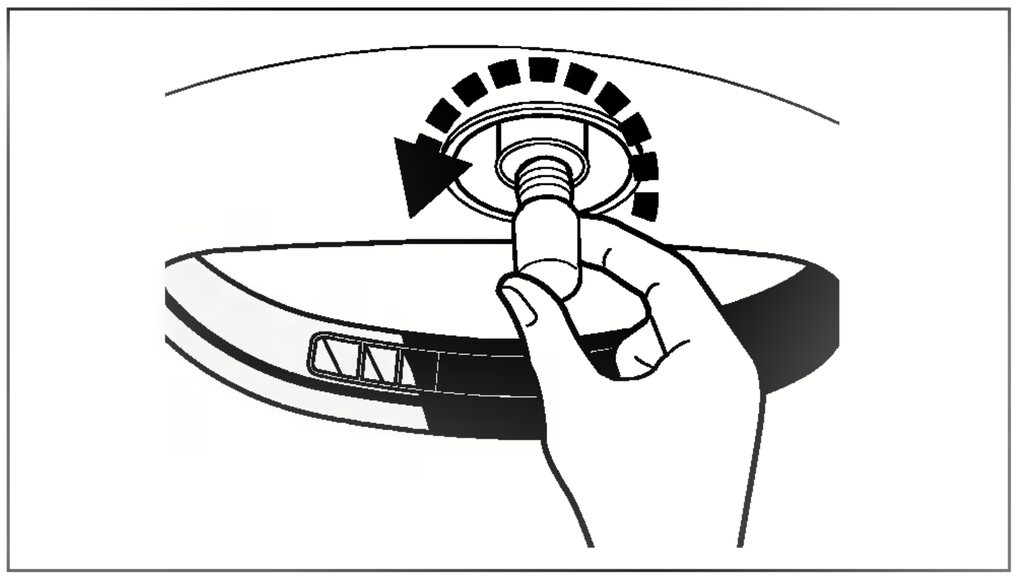

5. Screw in the new bulb in the reverse unscrewing direction.

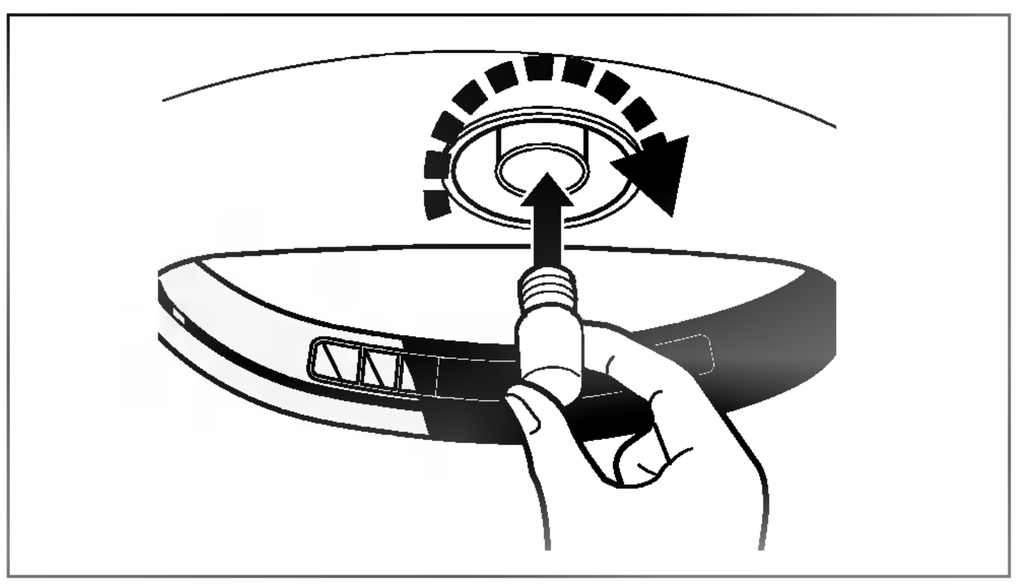

Do not need any special tool for this work.
All steps can be done manually.

dditional Tips for smart use

Drying Guide

Capacity for laundry type

Cotton	7 kg
Mixed	3.5 kg
Wool	1.5 kg
Delicate	1.5 kg

Woolen Article

Dry woolens in "wool" cycle. Be sure to follow fabric care label "symbols", first. Wool is not completely dried from the program so don't repeat drying. Pull woolens to their original shape and dry them flat.

Woven and loopknit materials

Some woven and loopknit materials may shrink, depending on its quality.

Permanent Press and Synthetics

Do not overload your dryer.
Take out permanent press article as soon as the dryer stops to reduce wrinkles.

Baby clothes and Night gowns

Always check the manufacturer's instructions.

Rubber and Plastics

Do not dry any items made from or containing rubber or plastics such as:
a) Aprons, bibs and chair covers
b) Curtains and table clothes
c) Bathmats

Fiber glass

Do not dry fiberglass articles in your dryer.
Glass particles left in the dryer could be picked up by your clothes the next time you use the dryer and irriate your skin.

Fabric Care Labels

Clothes have its own wash care labels so drying according to wash care labels is recommended.
Not only that, the laundry must be sorted according to size and fabric type.
Do not overload in order to save you energy, time and best dry performance.

Below are fabric care labels.

Symbols	Instructions
	Dry
	Tumble dry
	Permanent Press / Wrinkle resistant
	Gentle / Delicate
	Do not tumble dry
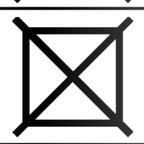	Do not dry
	High heating
	Medium heating
	Low heating
	No heat / air
	Line Dry / hang to dry
	Drip dry
	Dry flat
	In the shade

dditional Tips for smart use

F

Spare Parts

Spare parts in your need are provided under the terms of warranty. Components covered by warranty is provided free of charge. If coverage is expired, spare parts must be purchased from service center.

Disposal of the dryer

It is desirable for you to dispose the dryer safely to keep your children away from the possible injury.
The door and lid and other protruded items must be taken away and power cord must be cut off to avoid future use. After that, the dryer is to be disposed safely.

Service contact

If there is something wrong with your dryer, first you must be through the troubleshooting table. In case that you can't find the same trouble and you can not handle by yourself, please contact the service centre.

A service person will ask you some questions like followings:

1. Your name, address and postcode.
2. Your phone number.
3. Description of trouble.
4. The model No. and the serial No. of your dryer.
5. The date of purchase.

Accessory parts

Your dryer comes with accessories such as

1. Condensing drain hose



2. Hose holder

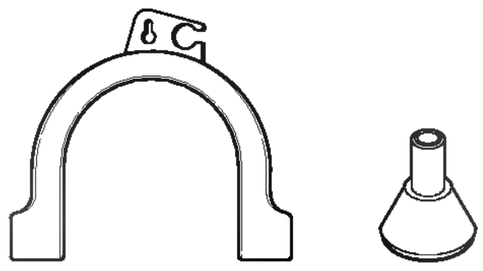

3. Dryer Rack

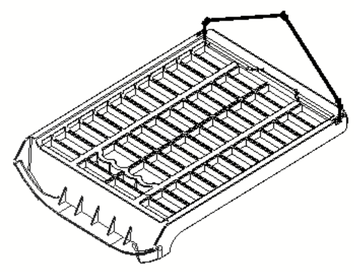

Stacking Kit

①	②
Holder : 2EA, Screw : 4EA	Holder : 2EA, Screw : 4EA
Purchased Separately	Purchased Separately

- Stacking kit Use condition
  - fig ① : Washer top plate size 550
  - fig ② : Washer top plate size 600

If stacking is needed, you must stack the dryer upon LG washing machine.
In order to do this, stacking kit must be purchased separately.

Questions	
Dryer doesn't work	1. Check dryer is plugged in. 2. Check "Start" button is pressed. 3. Check door is properly closed. 4. Check Room temperature is below 5°C. 5. Check a fuse is not blown or the circuit breaker is tripped and replace them. (Caution : electric dryers generally use two fuses or breakers) After emptying the water container and Cleaning filter during operation, you must press Start button, then the dryer operates again.
It takes a long time to dry	1. Filter should be cleaned after each load. 2. Check water container is emptied. 3. Check cleanness of condenser. 4. Check to select correct program setting for fabric type. 5. Check air ventilation grille or rear vents of the dryer to be obstructed. 6. Check the clothes is "excessively wet". 7. Check correct program selected. 8. Check dryer is overloaded.
"Clean the Filter" display	1. Check filter is cleaned. 2. Check condenser unit is clogged.
Drum light does not work	Check the bulb filament is cut off.
Clothes have lots of lints	1. Check lint filter is empty. 2. Check dryer has only clean items. 3. Check laundry is properly sorted in the drum. 4. Check laundry is overloaded. 5. Check there is any paper, tissue,or similar item in the pockets of laundry.
The drying time is not consistent	The drying time for a load will vary depending on the heat setting, the size of the load, the type of fabrics, the wetness of the clothes and the condition of the lint filter.
Water is leaking	Check the door and sealing cover is dirty and damaged.
The clothes are wrinkled	Check the laundry is overloaded. Try a shorter drying time and remove items while they still retain a slight amount moisture.
The clothes shrinked	To avoid shrinkage, please carefully follow the care and use instructions for your garment, because some fabrics will naturally shrink when washed. Other fabrics can be washed but will shrink when dried in a dryer.

roubleshootings

F

Error Mode

- 

: LCD displays " DOOR OPEN " in case of the door open. The door must be closed and start Button must be pressed for re-operation.

High temperature and high humidity of air continues to remain at the contained dryer by drying object during drying if the dryer suddenly stops due to power failure or other different causes while drying is in progress.
Leaving the dryer continuously in such status may reduce durability of the dryer or have a bad effect on major electrical parts.
Open the door so that high temperature and high humidity of air discharges outside if the dryer will stop for a long time while drying is in progress.

- 

: This is indication to detect and inform high temperature and high humidity of air within a dryer if stopping the dryer in process. In this case, please use the dryer again after ventilating air by taking drying all objects and opening the door for more than an hour.
(Contact with the Service Center if such conditions continue even after leaving the door open for a sufficient time.)

- 

: If ELE error continues to occur, unplug the power cords and then call to the Service Center.

- 

: Unplug the power plug and call for service.

Technical Data



Electrical Requirements

	Volts	Hertz	Watts
U.K. Singapore	230 V	50 Hz	2900
Kuwait	240 V	50 Hz	2900
Australia	240 V	50 Hz	2250

You are sure to check the rating plate on the dryer to make sure the dryer has right rating.

	Alcove or Under Counter	Closet
Sides	0 mm	0 mm
Top	0 mm	250 mm
Rear	25 mm	125 mm

Ventilation Requirement

Alcove or under counter	
Ensure air flow of 112 cu.ft./min through dryer	Closet door must have 2(louvered) openings, each having a minimum area of 60 sq. inches (387 sq.cm), located 3 inches (8 cm) from bottom and top of door.

arranty

F

Disposal of your old appliance

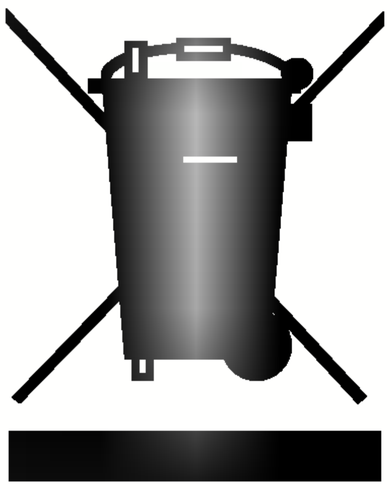

1. When this crossed-out wheeled bin symbol is attached to a product it means the product is covered by the European Directive 2002/96/EC.
2. All electrical and electronic products should be disposed of separately from the municipal waste stream via designated collection facilities appointed by the government or the local authorities.
3. The correct disposal of your old appliance will help prevent potential negative consequences for the environment and human health.
4. For more detailed information about disposal of your old appliance, please contact your city office, waste disposal service or the shop where you purchased the product.

■ What is not covered.

Service trips to your home to instruct you on the product.
If the product is connected to any voltage other than that shown on the rating plate.
If the fault is caused by accidents, neglects, misuses of Acts of God.
If the fault is caused by reasons except for normal domestic use or use in accordance with the owner's manual.
If the fault is caused by pests, for example, rats or cockroaches etc..
Noise or vibration that is considered normal,for example, water drain sound, spin sound or warning beeps.
Correcting the installation for example, leveling the product, adjustment of drain.
Normal maintenance recommended by the owner's manual.
Removal of foreign objects/substances from the machine including the pump and inlet hose filter, for example, grit,nails, bra wires and buttons etc..
Replace fuses in or correct wiring or correct house plumbing.
Correction of unauthorized repairs.
Incidental or consequential damage to personal property caused by possible defects with this appliance.
If this product is used for commercial purposes, it is not warranted.
(Example:Public places such as public bathroom, lodging house, training center, dormitory)

If the product is installed outside the normal service area, any cost of transporatation involved in the repair of the products, or the replacement of a defective part, shall be borne by the owner.

Warranty conditions for dryer

1. **The warranty period begins** on the purchase date and is valid for 24 months. Begin of warranty period is proven if, the buyer submits purchase receipt together with the warranty card, filled in and signed by the seller. The serial number of the product must agree with the number entered onto the warranty card.
2. **During the warranty period, we will** correct any defects at no cost to you, if it can be proven that these are attributed to manufacturing or material defects.
3. Damages due to incorrect handling, non-compliance with instructions for use and normal wear **are not covered by this warranty.** Also, the warranty does not cover wear parts or easily broken parts (for example, viewing glass, light bulbs). The buyer is responsible for any damages during transport as well as shipping and packaging costs.
4. **We decide whether to make repairs, exchange or replace parts.** Exchanged or replaced parts are our property. The original warranty period is not prolonged if a refrigerator is repaired or certain parts are replaced.
5. **The warranty is nullified** if any person intervenes in the apparatus that are not authorised by LG Electronics, if the apparatus is used for commercial purposes.
6. **Always keep the original packaging,** so that if the apparatus requires servicing, it can be transported without damaging it.
7. **If a repair is covered by this warranty,** always contact your dealer or an authorised service centre.
8. **Further claims are excluded.** If parts of these provisions are invalid, they apply in the sense of the wording. The validity of the other provisions is not effected.

Warranty Certificate

For offer a 24-month warranty for this apparatus

During the 24-month warranty period, we will repair your apparatus at no cost to you or make available spare parts to your dealer free, if this apparatus fails due to manufacturing or material defects. Further claims are excluded.
Your warranty conditions on the rear also apply!

Type of apparatus : _____ Serial number : [ ]

Name of buyer : _____

Purchase date : _____ Dealer's stamp and signature

LG Electronics Inc.

P/No.:3828EL4003G