LG Electronics Inc.

For U.K. Customer

CUSTOMER SERVICES : 0870-592-9929(Service Force)
Mon.-Fri. 8:30AM - 5:30PM
LGEUK SERVICE WEB-SITE : www.lgelectronics.co.uk

P/No.: 3828ER3047W

LG

Washing Machine

OWNER'S MANUAL

WD(M)-16341(6)FD / WD(M)-16340(5)FD
WD(M)-14341(6)FD / WD(M)-14340(5)FD
WD(M)-12341(6)FD / WD(M)-12340(5)FD

Thank you for buying a
LG Fully Automatic Washing machine.
Please read your owner's manual carefully, it provides instructions on safe installation, use and maintenance.
Retain it for future reference.
Record the model and serial numbers of your washing machine.



■ Jumbo drum

LG's jumbo drum can wash about 40% more load than conventional washing machines. A bigger drum improves the wash performance.



■ More economical by Intelligent Wash System

Intelligent Wash System detects the amount of load and water temperature, and then determines the optimum water level and washing time to minimize energy and water consumption.



■ Child-Lock

The child-lock system is to be used for preventing children from pressing any button to change the program during operation.

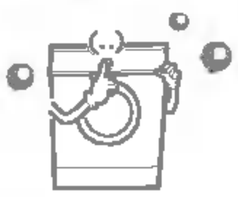

■ Low noise speed control system

By sensing the amount of load and balance, it evenly distributes load to minimize the spinning noise level.

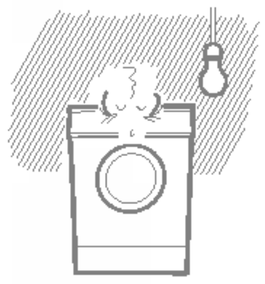

■ Auto Restart

Auto Restart allows the program to restart all by itself in case of power failure. It does from the stage where it stopped.

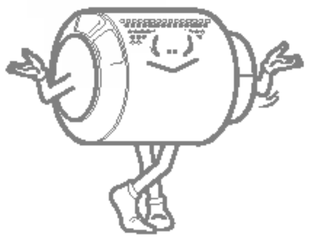

■ Direct Drive System

The advanced Brushless DC motor rotates the drum directly without belt and pulley.

■ Water circulation



Spray detergent solution and water onto the load over and over. Clothes are soaked more quickly and thoroughly during wash cycle. The detergent suds can be removed more easily by the water shower during rinse cycle. The water circulation system uses both water and detergent more efficiently.

Warnings.....3
Specifications.....4
Installation.....5
Care before washing.....11
Adding detergent.....12
Function.....13
How to use washer.....14
Maintenance.....21
Troubleshooting guide.....24
Terms of Warranty.....27

READ ALL INSTRUCTIONS AND EXPLANATION OF THE INSTALLATION BEFORE USE

For your safety, the information in this manual must be followed to minimize the risk of fire or explosion, electric shock, or to prevent property damage, personal injury, or loss of life.

IMPORTANT SAFETY INSTRUCTIONS

WARNING : To reduce the risk of fire, electric shock, or injury to persons when using the washer, follow basic precautions, including the following:

- Before installation, check exterior damages. If it has, do not install.
- Do not install or store the washer where it will be exposed to the weather.
- Do not tamper with controls.
- Do not repair or replace any part of the washer or attempt any servicing unless specifically recommended in the user-maintenance instructions or published user-repair instructions that you understand and have the skills to carry out.
- Keep the area underneath and around your appliances free of combustible materials such as lint, paper, rags, chemicals, etc.
- Close supervision is necessary if this appliance is used by or near children or infirm persons. Do not allow them to play on, with, or inside this or any other appliance.
- Keep washer away from fire.
- Do not leave the washer door open. An open door could entice children to hang on the door or crawl inside the washer.
- Never reach into washer while it is moving. Wait until the drum has completely stopped.
- The laundry process can reduce the flame retardant of fabrics.
- To avoid such a result, carefully follow the garment manufacturer's wash and care instructions.
- Do not wash or dry articles that have been cleaned in, washed in, soaked in, or spotted with combustible or explosive substances (such as wax, oil, paint, gasoline, degreasers, dry-cleaning solvents, kerosene, etc.) which may ignite or explode.
- Do not slam the washer door closed or try to force the door open when locked. This could result in damage to the washer.
- When the machine runs high temperature, the front door may be very hot. Don't touch it.
- To minimize the possibility of electric shock, unplug this appliance from the power supply or disconnect the washer at the household distribution panel by removing the fuse or switching off the circuit breaker before attempting any maintenance or cleaning.
- When unplugging power cord, do not pull out by grasping the cord. Otherwise, the power cord may be damaged.
- Never attempt to operate this appliance if it is damaged, malfunctioning, partially disassembled, or has missing or broken parts, including a damaged cord or plug.
- Before discarding an old machine unplug it. Render the plug useless. Cut off the cable directly behind the appliance to prevent misuse.

☼ **Do not push down the door excessively, when washer door open. This could topple over the washer.**

SAVE THESE INSTRUCTIONS

GROUNDING INSTRUCTIONS

This appliance must be grounded. In the event of malfunction or breakdown, grounding will reduce the risk of electric shock by providing a path of least resistance for electric current. This appliance is equipped with a cord having an equipment-grounding conductor and grounding plug. The plug must be plugged into an appropriate outlet that is properly installed and grounded in accordance with all local codes and ordinance.

- Do not use an adapter or otherwise defeat the grounding plug.
- If you don't have the proper outlet, consult an electrician.

WARNING : Improper connection of the equipment-grounding conductor can result in risk of electric shock. Check with a qualified electrician or serviceman if you are in doubt as to whether the appliance is properly grounded. Do not modify the plug provided with the appliance - if it does not fit the outlet, have a proper outlet installed by a qualified electrician.

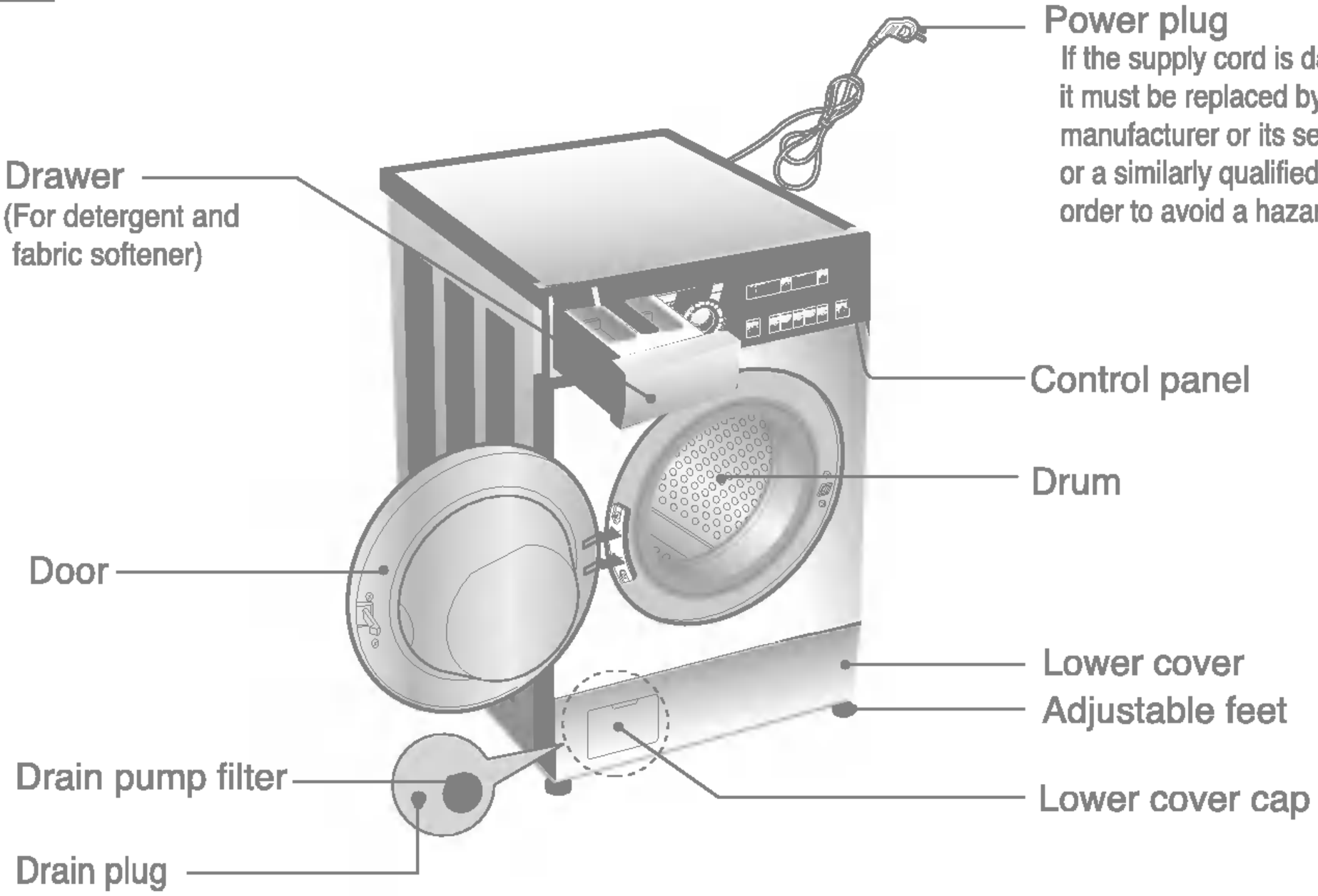

■ Name : Front loading washing machine

■ Power supply : 220-240 V~, 50 Hz

■ Size : 600mm(W) x 600mm(D) x 850mm(H)

■ Weight / Max.Watt : 65 kg / 2100 W

■ Wash capacity : Refer to the Rating Label

■ Water consumption : 50 ℓ

■ Permissible water pressure : 0.3-10 kgf/cm² (30-1000 kPa)

■ Spin speed : No spin/400/600/800/1000/1200/1400/1600
[WD(M)-16341(6)FD / WD(M)-16340(5)FD]
No spin/400/600/800/1000/1200/1400
[WD(M)-14341(6)FD / WD(M)-14340(5)FD]
No spin/400/600/800/1000/1200
[WD(M)-12341(6)FD / WD(M)-12340(5)FD]

※ The appearance and specifications may be varied without notice to raise the units quality.

■ Accessories

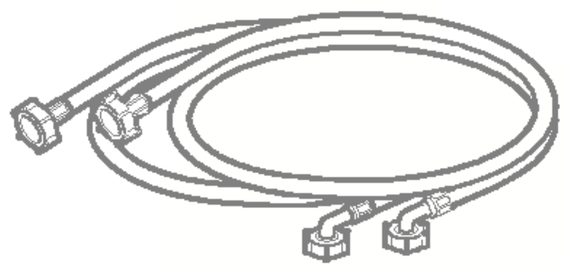

Inlet hose 1EA ※Option Hot/Cold (2 EA)

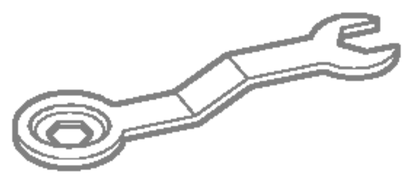

Spanner

Install or store where it will not be exposed to temperatures below freezing or exposed to the weather.
Properly ground washer to conform with all governing codes and ordinances.
The base opening must not be obstructed by carpeting when the washing machine is installed on a carpeted floor.
In countries where there are areas which may be subject to infestation by cockroaches or other vermin, pay particular attention to keeping the appliance and its surroundings in clean condition at all times.
Any damage which may be cause by cockroaches or other vermin will not be covered by the appliance guarantee.

■ Transit bolts

The appliance is fitted with transit bolts to prevent internal damage during transport.

- Packing and all transit bolts must be removed before using the washer.

☞ When unpacking the base, be sure to remove the additional packing support in the middle of the base packing.

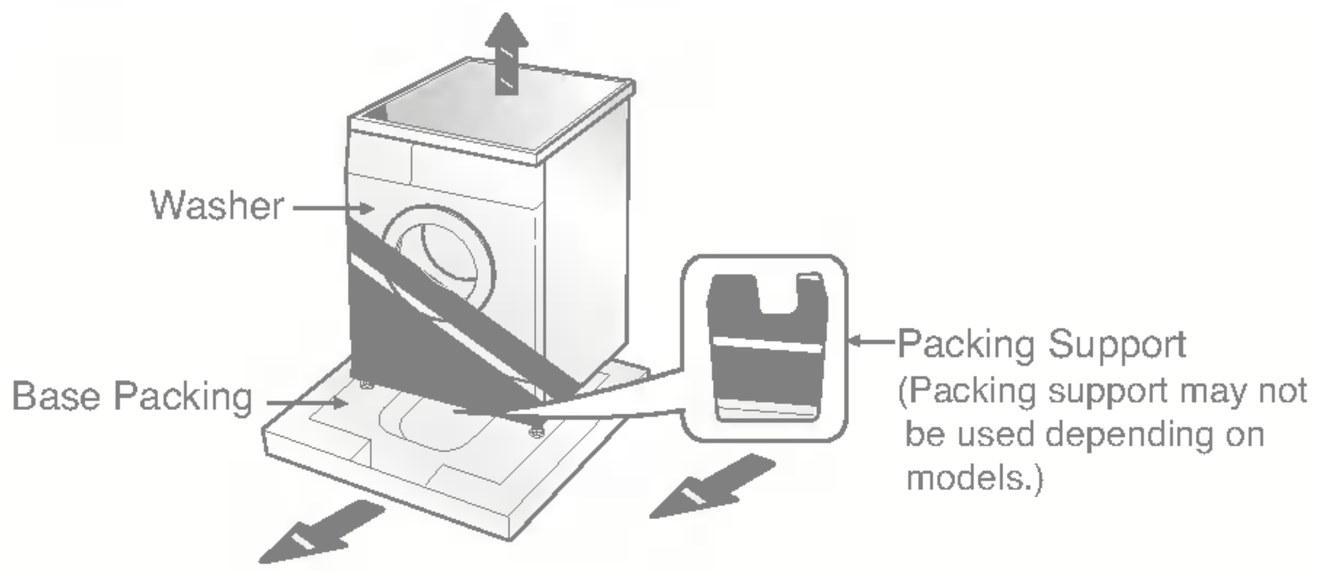

■ Removing transit bolts

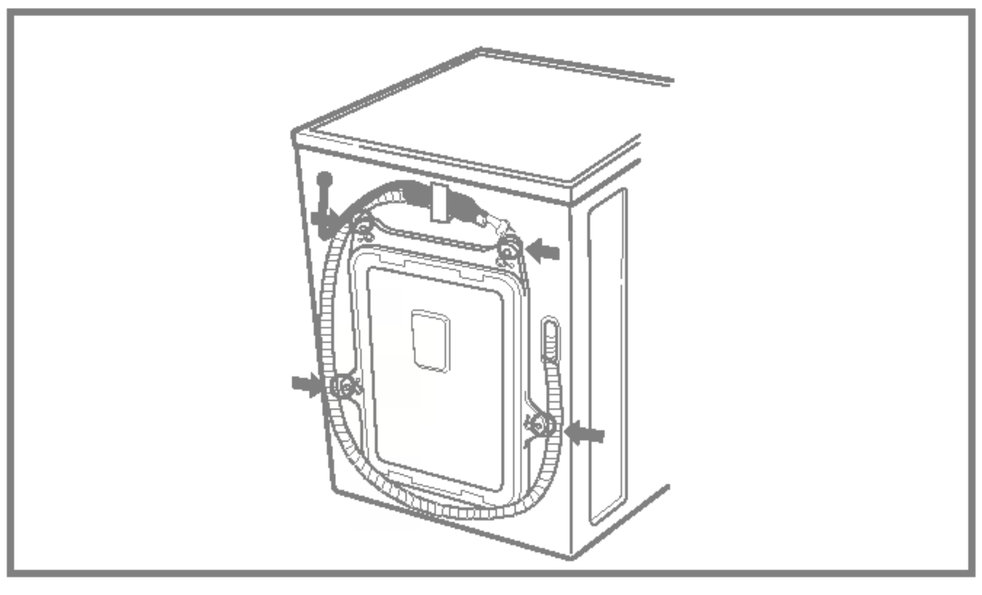

1. To prevent internal damage during transport, the special 4 bolts are locked. Before operating the washer, remove
the bolts along with the rubber bungs.

- If they are not removed, it may cause heavy vibration, noise and malfunction.

2. Unscrew the 4 bolts with
the spanner supplied.

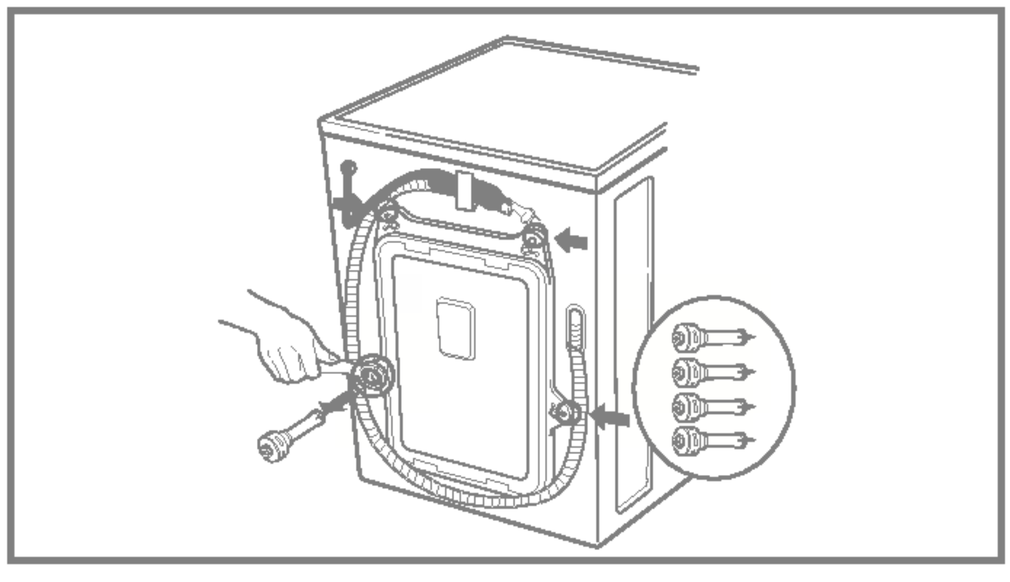

3. Take out the 4 bolts along with the rubber bungs by slightly twisting the bung. Keep the 4 bolts and the spanner for future use.

- Whenever the appliance is transported, the transit bolts must be refitted.

4. Close the holes with the caps supplied.

■ Installation place requirement

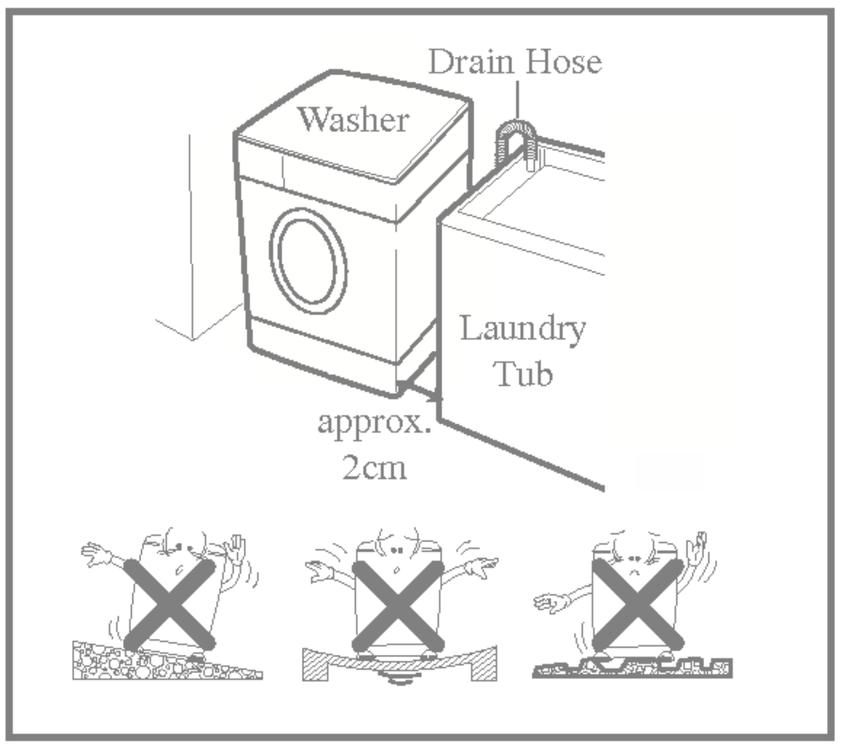

Level floor :
Allowable slope under entire washer is 1°
Power outlet :
Must be within 1.5 meters of either side of location of washer. Do not overload the outlet with more than one appliance.
Additional Clearance :
For wall, door and floor modeling is required.
(10cm : rear / 2cm: right & left side)

Do not place or store laundry products on top of washer at any times.
They can damage the finish or controls.

■ Positioning

Install the washer on a flat hard floor.
Make sure that air circulation around the washer is not impeded by carpets,rug etc.

- Never try to correct any unevenness in the floor with pieces of wood, cardboard or similar materials under the washer.
- If it is impossible to avoid positioning the washer next to a gas cooker or coal burning stove,an insulating(85x60cm) covered with aluminum foil on the side facing the cooker or stove,must be inserted between the two appliance.
- The washer must not be installed in rooms where the temperature can drop below 0°C.
- Please ensure that when the washer is installed, it is easily accessible for the engineer in the event of a breakdown.
- With the washer installed adjust all four feet using the transit bolt spanner provided ensuring the appliance is stable, and a clearance of approximately 20mm is left between the top of the washer and the underside of the work-top.

■ BS Plug Safety Details (For U.K. User)

IMPORTANT
THE WIRES IN THIS MAINS LEAD ARE COLOURED IN
ACCORDANCE WITH THE FOLLOWING CODE:
GREEN AND YELLOW: EARTH
BLUE: NEUTRAL
BROWN: LIVE
This appliance must be earthed

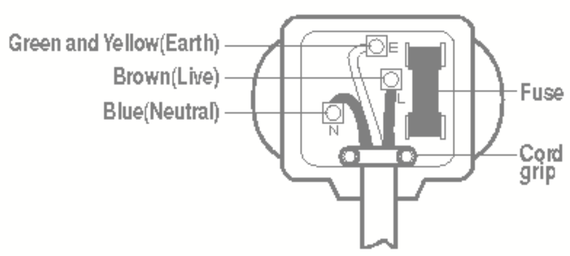

As the colours of the wires in the mains lead of this apparatus may not correspond with the coloured markings identifying the terminals in your plug, proceed as follows:
The wire which is coloured Green and Yellow must be connected to the terminal in the plug which is marked with the letter E or by the earth symbol ⏚ or coloured Green or Green and Yellow.
The wire which is coloured Blue must be connected to the terminal which is marked with the letter N or coloured Black.
The wire which is coloured Brown must be connected to the terminal which is marked with the letter L or coloured Red.
If a 13 amp (BS 1363) plug is used, fit a 13 amp BS 1362 fuse.

■ Electrical connection

1. Do not use an extension cord or double adapter.
2. If the supply cord is damaged, it must be replaced by the manufacturer or its service agents or similarly qualified person in order to avoid a hazard.
3. Always unplug the machine and turn off the water supply after use.
4. Connect the machine to an earthed socket in accordance with current wiring regulations.
5. The appliance must be positioned so that the plug is easily accessible.

- Repairs to the washing machine must only be carried out qualified personnel. Repairs carried out by inexperienced persons may cause injury or serious malfunctioning. Contact your local service center
- Do not install your washing machine in rooms where temperatures below freezing may occur. Frozen hoses may burst under pressure. The reliability of the electronic control unit may be impaired at temperatures below freezing point.
- If the appliance is delivered in the winter months and temperatures are below freezing : Store the washing machine at room temperature for a few hours before putting it into operation.

CAUTION concerning the Power Cord

Most appliances recommend they be placed upon a dedicated circuit; that is, a single outlet circuit which powers only that appliance and has no additional outlets or branch circuits. Check the specification page of this owner's manual to be certain.
Do not overload wall outlets. Overloaded wall outlets, loose or damaged wall outlets, extension cords, frayed power cords, or damaged or cracked wire insulation are dangerous. Any of these conditions could result in electric shock or fire. Periodically examine the cord of your appliance, and if its appearance indicates damage or deterioration, unplug it, discontinue use of the appliance, and have the cord replaced with an exact replacement part by an authorized servicer.
Protect the power cord from physical or mechanical abuse, such as being twisted, kinked, pinched, closed in a door, or walked upon. Pay particular attention to plugs, wall outlets, and the point where the cord exits the appliance.

■ Washing Machine is to be connected to the water mains using new hose-sets and that old hose-sets should not be used.

■ Connecting water supply hose

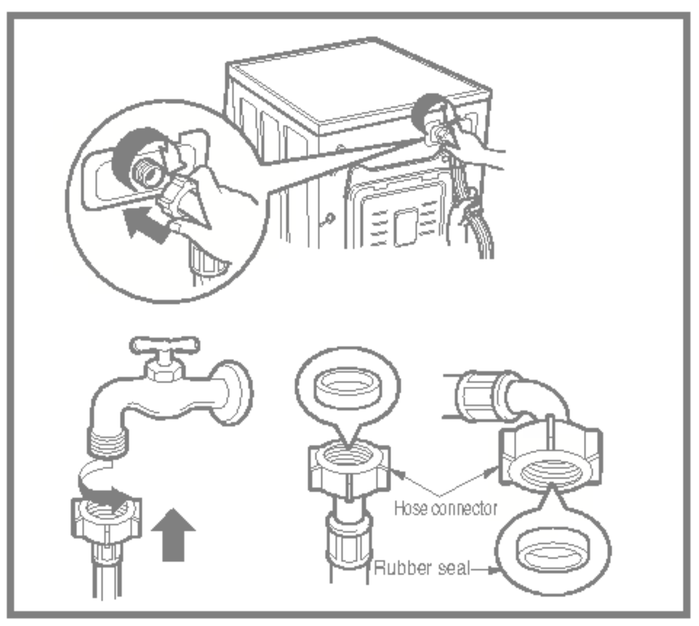

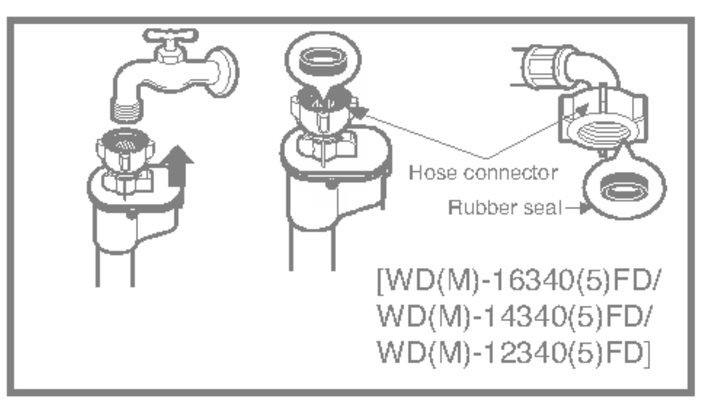

[WD(M)-16340(5)FD/
WD(M)-14340(5)FD/
WD(M)-12340(5)FD]

▶ *Water supply pressure must be between 30kPa and 1000kPa (0.3~10kgf/cm²)*
▶ *Don't strip or crossthread when connecting Inlet hose to the valve.*
▶ *If the water supply pressure is more than 1000kPa, a decompression device should be installed.*

- Two rubber seals are supplied with the water inlet hoses these are in order to prevent water leaks.
- Check water tightness of washing machine connections by turning the tap completely on.
- Periodically check the condition of the hose and replace the hose if necessary.
- Make sure that there is no kink on the hose and that it is not crushed.

▶ ***When your washer has two valves.***

- The Inlet hose which has red connector is for the hot water tap.
- If the washer has two valves, the energy is saved by using hot valve.

■ Normal Tap without thread & screw type inlet hose

1. Unscrew the fixing screw to attach the tap.

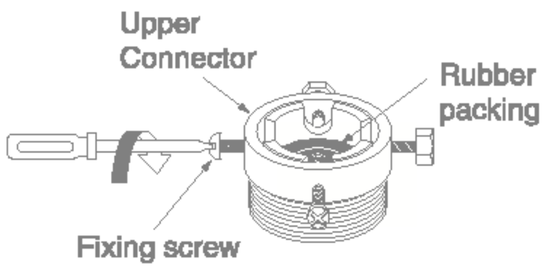

2. Push the connector up till the rubber packing is in tight contact with the tap. Then tighten the 4 screws.

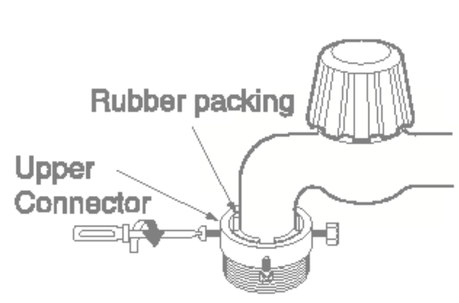

3. Push the water supply hose vertically upwards so that the rubber packing within in the hose can adhere completely to the tap and then tighten it by screwing it to the right.

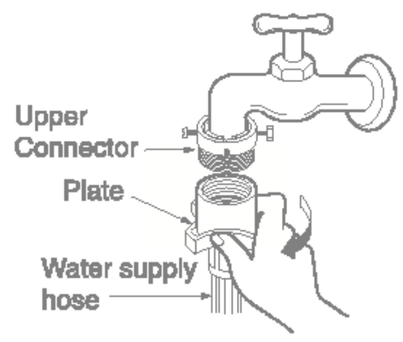

■ Normal Tap without thread & one touch type inlet hose

1. Untighten the upper connector screw.

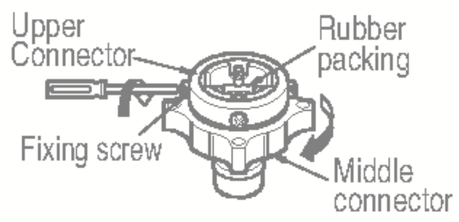

• In case the diameter of the tap is large remove the guide plate.

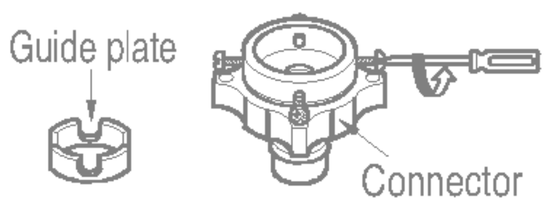

2. Push the upper connector up till the rubber packing is in tight contact with the tap. Then tighten the 4 screws.

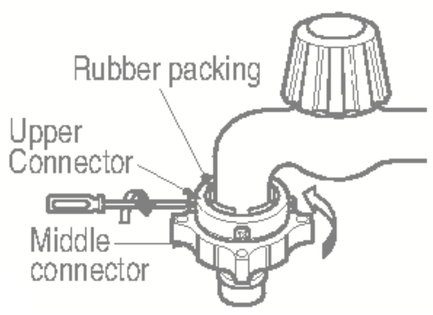

• Turn the middle connector not to have water leaked.

• Make sure that the rubber seal is inside the hose connector.

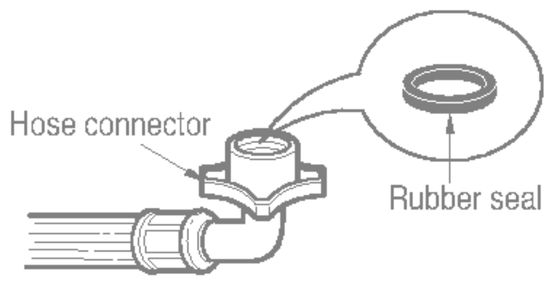

3. Connect the water supply hose to the middle connector, pushing the plate down.

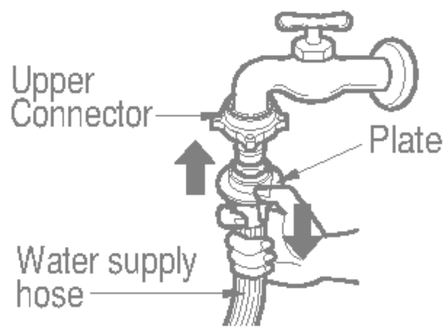

• To separate the water supply hose from the middle connector shut off the tap. Then pull the inlet hose down, pushing the plate down.

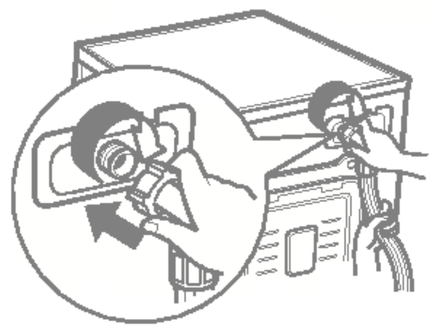

• Your machine comes with only cold water connection.
• Make sure that there are no kinks in the hose and that it is not crushed.

Used the horizontal tap	
Horizontal tap	
Extension tap	
Square tap	

This equipment is not designed for maritime use or for use mobile installations such as caravans, aircraft etc.
Turn off the stopcock if the machine is to be left for any length of time (e.g. holiday), especially if there is no floor drain(gully) in the immediate vicinity.
When disposing of the appliance, cut off the mains cable, and destroy the plug Disable the door lock to prevent young children being trapped inside.
Packaging material (e.g. Films, Styrofoam) can be dangerous for children. There is a risk of suffocation !
Keep all packaging well away from children

■ Installation of drain hose

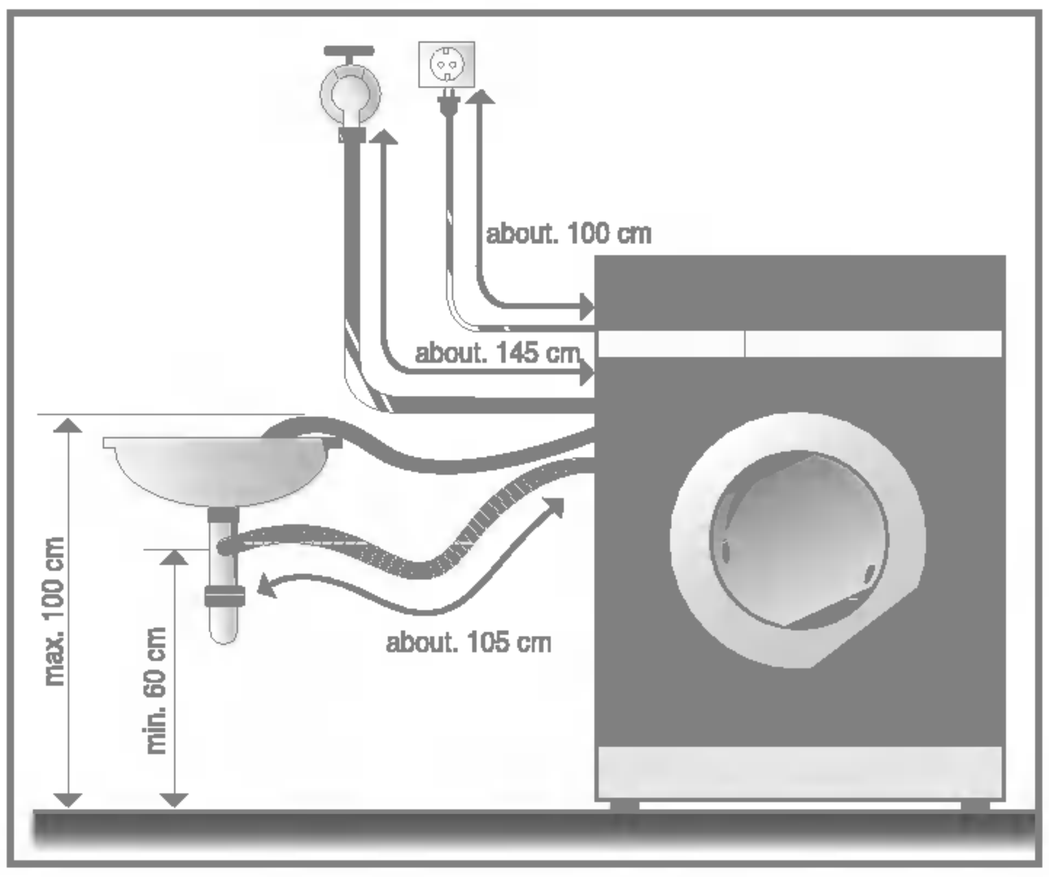

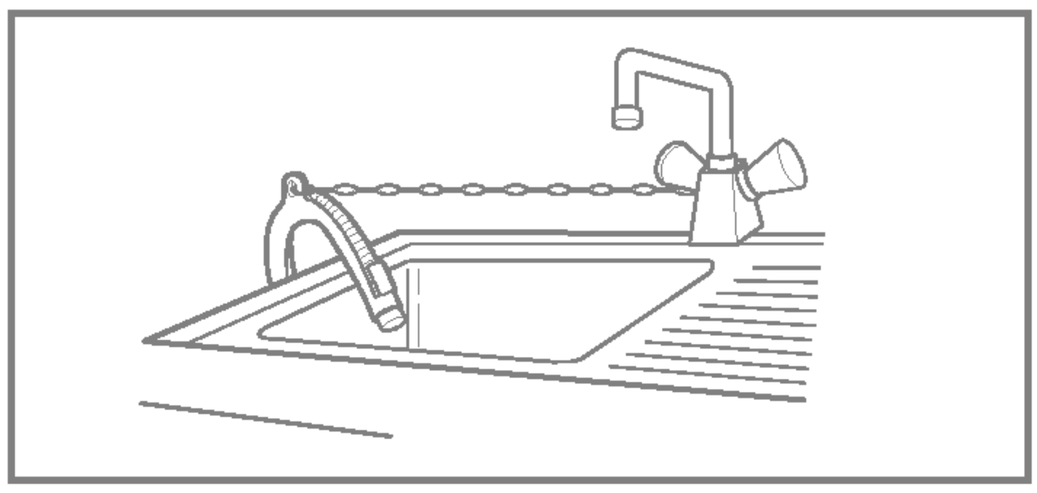

- When installing the drain hose sink, secure it tightly with a string.
- Proper securing of the drain hose will protect the floor from damage due to water leakage.

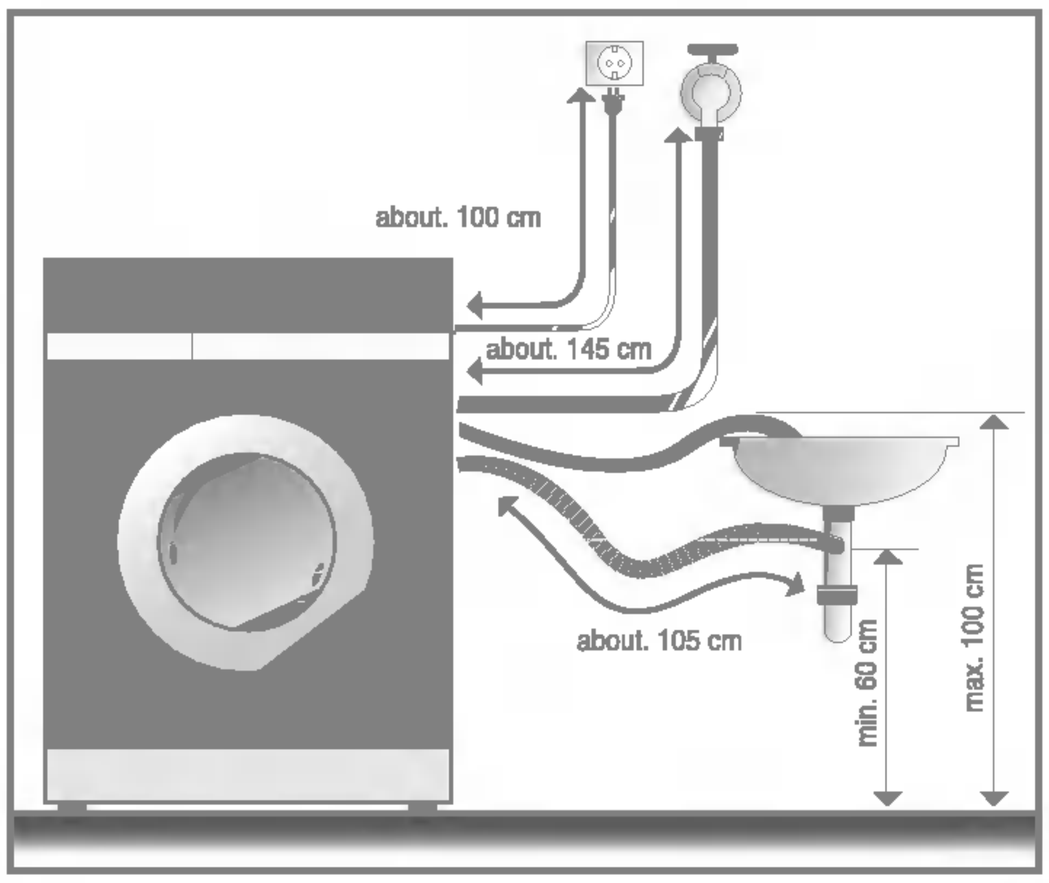

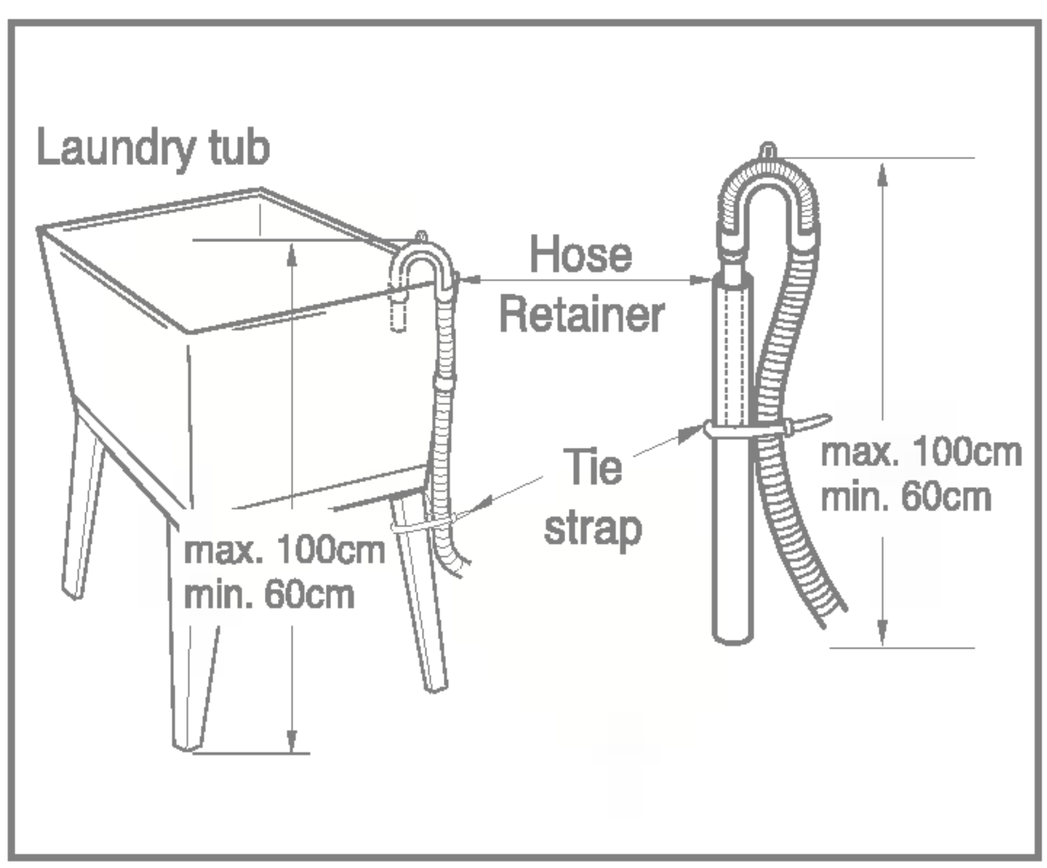

- The drain hose should not be placed higher than 100 cm above the floor.
- Proper securing of the drain hose will protect the floor from damage due to water leakage.
- When the drain hose is too long, do not force back into the washer. This will cause abnormal noise.

■ Level adjustment

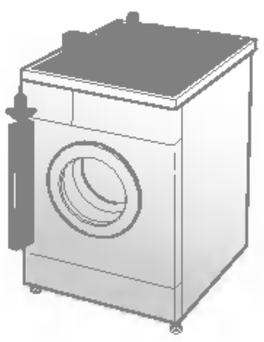

1. Adjusting the washing machine level properly prevents excessive noise and vibration.
   Install the appliance on a solid and level floor surface, preferably in a corner of the room.

   NOTE Timber or suspended type flooring may contribute to excessive vibration and unblance errors.

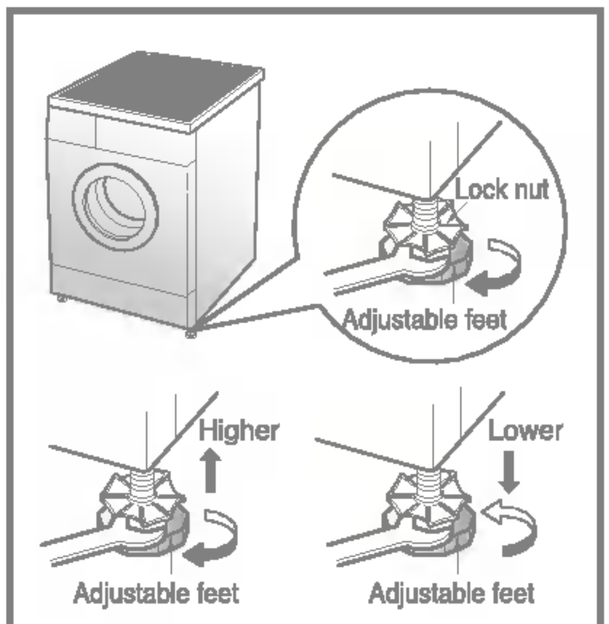

2. If the floor is uneven, adjust the adjustable feet as required. (do not insert pieces of wood etc. under the feet)
   Make sure that all four feet are stable and resting on the floor and then check that the appliance is perfectly level. (use a spirit level)

※ *After the washer is level, tighten the lock nuts up towards of the base of the washer. All lock nuts must be tightened.*

NOTE In the case that the washing machine is installed on a raised platform, it must be securely fastened in order to eliminate the risk that it might fall off.

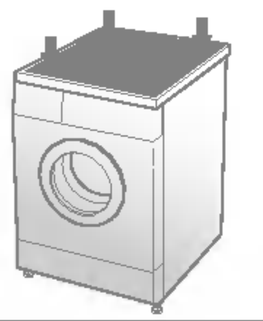

※ *Diagonal Check*

When pushing down the edges of the washing machine top plate diagonally, the machine should not move up and down at all. (Please, check both of two directions)
If machine rocks when pushing the machine top plate diagonally, adjust the feet again.

■ Concrete floors

- The installation surface must be clean, dry and level.
- Install washer on a flat hard floor.

■ Tile floors (Slippery floors)

- Position each foot on the Tread Mate and level the machine to suit. (Cut Tread Mate into 70x70 mm sections and stick the pieces on to the dry tile where machine is to be placed.)

※ ***Tread Mate is a self adhesive material used on ladders & steps that prevents slipping.***

■ Wooden floors (Suspended floors)

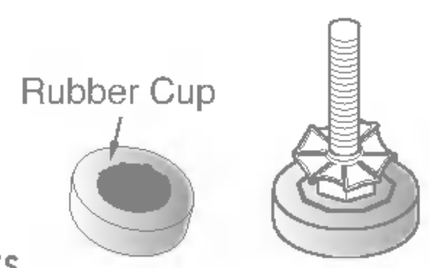

- Wooden floors are particularly susceptible to vibration.
- To prevent vibration we recommend you place rubber cups under each foot, at least 15mm thick under the washer, secured to at least 2 floor beams with screws.
- If possible install the washer in one of the corners of the room, where the floor is more stable.

※ ***Insert the rubber cups to reduce vibration.***

※ ***You can obtain the rubber cups (p/no.4620ER4002B) from the LG spares dept.***

- Proper placement and levelling of the washer ensure long,regular and reliable operation.
- The washer must be absolutely horizontal and stand firmly in position.
- It must not "Seesaw" across corners under load.
- The installation surface must be clean, free from floor wax and other lubricant coatings.
- Do not let the feet of the washer get wet. If feet of the washer get wet, slipping may occur.

■ Before the first washing

Select a cycle (COTTON 60°C, add a half load of detergent) allow the unit to wash without clothing.

This will remove residues from the drum that may have been left during manufacturing.

■ Caring before washing

1. Care Labels

Look for a care label on your clothes. This will tell you about the fabric content of your garment and how it should be washed.

2. Sorting

To get the best results, Sort clothes into loads that can be washed with the same wash cycle. Water temperature and spin speed and different fabrics need to be washed in different ways. Always sort dark colors from pale colors and whites. Wash separately as dye and lint transfer can occur causing discoloration of white etc. If possible, do not wash heavily soiled items with lightly soiled one.

Soil (Heavy, Normal, Light)	Separate clothes according to amount of soil.
Color (White, Lights, Darks)	Separate white fabrics from colored fabrics.
Lint (Lint producers, Collectors)	Wash lint producers and lint collectors separately.

3. Caring before loading

■ **Combine large and small items in a load. Load large items first. Large items should not be more than half the total wash load.**
Do not wash single items. This may cause an out-of-balance load. Add one or two similar items.

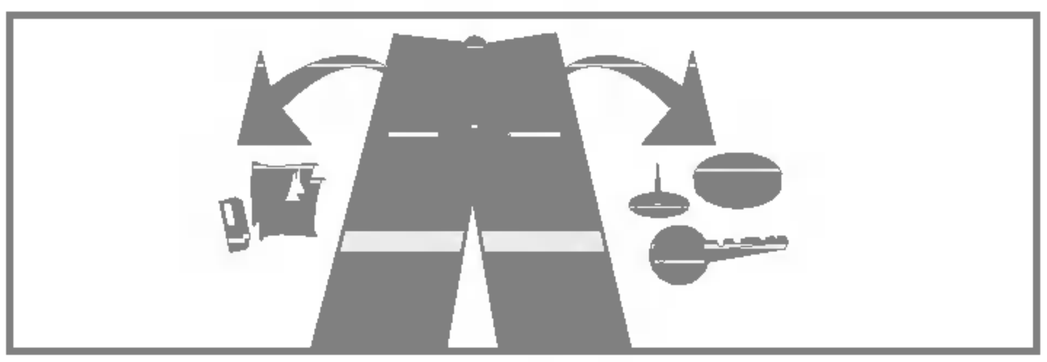

• Check all pockets to make sure that they are empty. Items such as nails, hair clip, matches, pens, coins and keys can damage both your washer and your clothes.

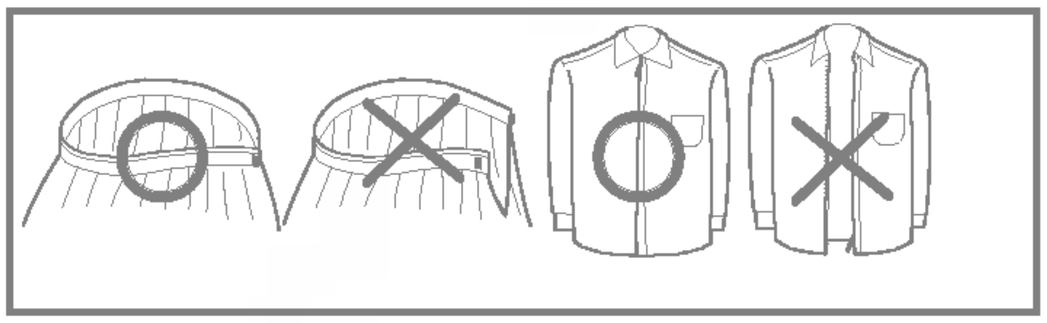

• Close zippers, hooks and strings to make sure that these items don't snag on other clothes.

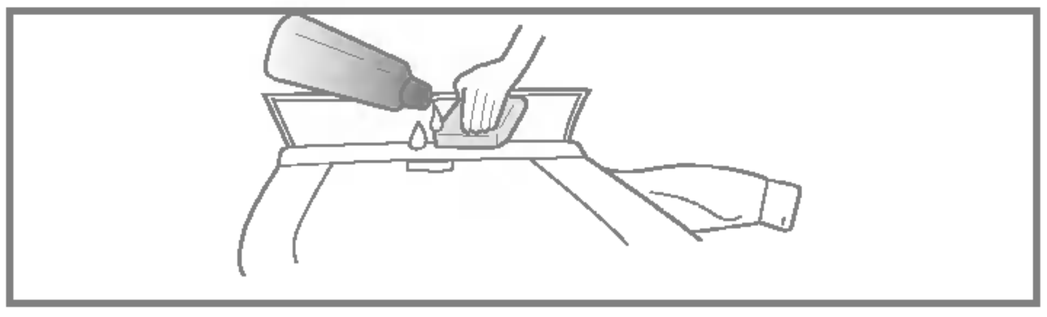

• Pre treat dirt and stains by brushing a little detergent dissolved in water onto stains like collars and cuffs to help shift dirt.

■ Adding detergent and fabric softener

1. The Dispenser Drawer

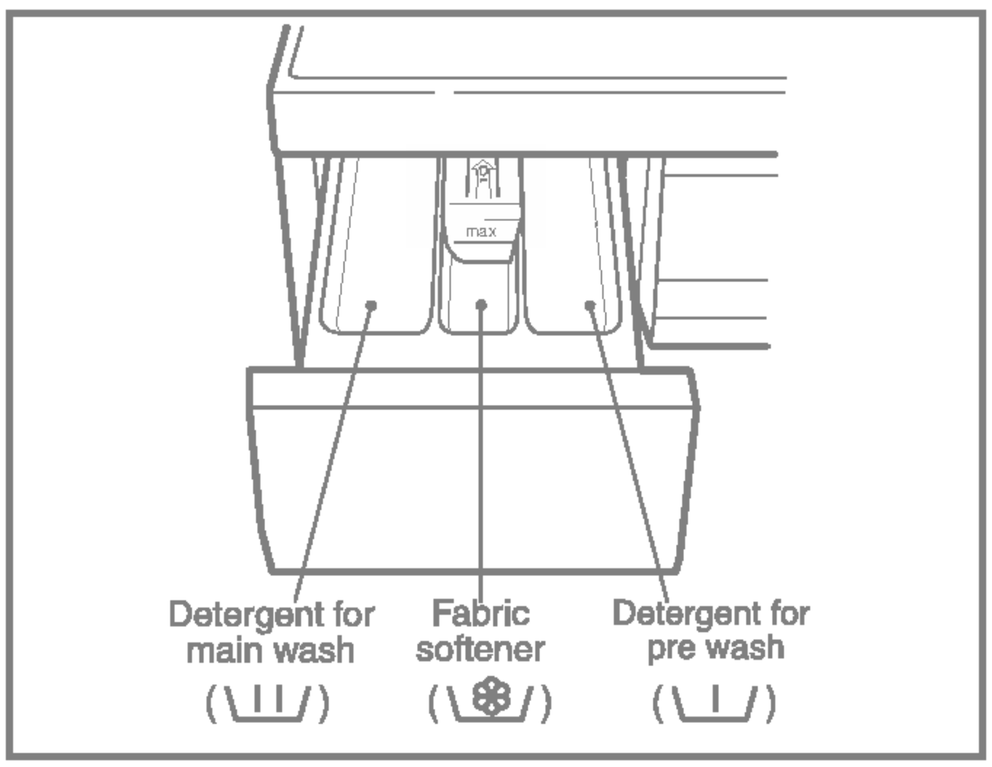

- Main wash only →
- Pre Wash + Main Wash → •

2. Adding Fabric Softener

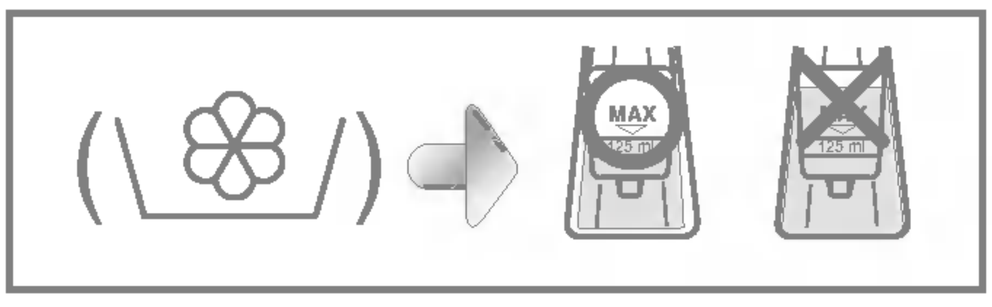

- Do not exceed the maximum fill line. Overfilling can cause early dispensing of the fabric softener which could stain clothes.
- Do not leave the fabric softener in the detergent drawer for more than 2 days. (Fabric softener could harden)
- Softener will automatically be added during the last rinse cycle.
- Do not open the drawer when water is supplied.
- Solvents(benzene, etc) are not allowable.

NOTE Do not pour fabric softener directly on the clothes

3. Detergent dosage

- *The detergent should be used according to the instruction of the detergent manufactrurers.*
- *If too much detergent is used more than the recommended amount, too many suds can occur and this will decrease the washing result or cause heavy load to the motor. (Causing malfunctions)*
- *Use powder detergent only for the front loading washer.*
- Detergent usage may need to be adjusted for water temperature, water hardness, size and soil level of the load. For best results, avoid oversudsing.

❋ Tips

- **Full load : according to manufacturer's recommendation.**
- **Part load : 3/4 of the normal amount.**
- **Minimum load : 1/2 of full load.**

- Detergent is flushed from the dispenser at the beginning of the cycle.

■ Recommended courses according to the laundry types

* ( ) : WD(M)-14341(6)FD / WD(M)-12341(6)FD / WD(M)-14340(5)FD / WD(M)-12340(5)FD

Program	Fabric Type	Proper Temp.	Option	Maximum Load	Energy in kWh	Time in Minutes
Cotton	First check if laundry is machine washable. (white cotton, linen towel and sheets...)	95˚C	Rinse Hold Intensive Rinse+ Pre Wash Crease Care	Rating	2.74	123 (117)
	Color fast gaments (shirts, night dresses, pajamas...)and lightly soiled white cotton(underwear...)	60˚C (30˚C, 40˚C, 60˚C-Eco)	Rinse Hold Intensive Rinse+ Pre Wash Crease Care	Rating	1.10	106 (100)
Synthetic	Polyamide, Acryic, Polyester	40˚C (30˚C, 60˚C)	Rinse Hold Intensive Rinse+ Pre Wash Crease Care	Less than 3.5 kg	0.45	80
Delicate	Delicate laundry easily damaged	30˚C (40˚C, Cold)	Rinse Hold Intensive Rinse+ Crease Care	Less than 3.0 kg	0.41	52
Wool/Silk	Machine washable woolens with pure new wool or silk only	30˚C (40˚C, Cold)	Rinse Hold Intensive Rinse+ Crease Care	Less than 2.0 kg	0.28	50
Hand Wash	“Hand Wash” marked delicate and wool laundry	Cold (30˚C)	Rinse Hold Intensive Rinse+ Crease Care	Less than 2.0 kg	0.03	44
Quick 30	Colored Laundry which is lightly soiled fast.	30˚C	Rinse Hold Rinse+ Crease Care	Less than 2.0 kg	0.35	30

* Intensive : If the laundry is heavily soiled “Intensive” option is effective.
* Program setting with “Intensive” option for test in accordance or in conformity with EN60456 and IEC 60456.
* Rinse+: Used to introduce an additional rinse, which may assist in removing traces of detergent residue.
* Pre Wash : If the laundry is heavily soiled, “Pre Wash” course is recommended. Pre Wash is available in Cotton and Synthetic Program.
* Crease Care : If you want to prevent crease, select Crease Care button.

1. Cotton automatically selected upon power on.

• Press the **Power(⏻)** button to start.

• Press the **Start/Pause(⏯)** button.

• Initial conditions

- Wash : main wash

- Rinse : 3 times

- Spin : 1600 rpm [WD(M)-16341(6)FD / 16340(5)FD]
1400 rpm [WD(M)-14341(6)FD / 14340(5)FD]
1200 rpm [WD(M)-12341(6)FD / 12340(5)FD]

- Water temperature : 60°C

- Program : Cotton

2. Manual Selecting

• Press the **Power(⏻)** button to start.

• Select the conditions which you want to use, by turning the program dial and pressing each button.

For selecting the each conditions, please refer to the page15~page20

• Press the **Start/Pause(⏯)** button.

1. When the power is off, press the time delay button and power button simultaneously.

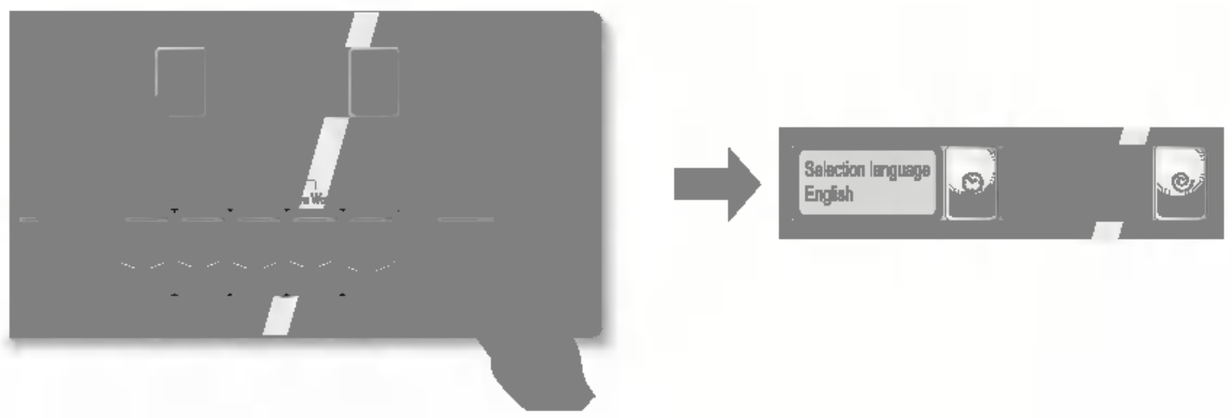

2. Turn the program dial to select the language.

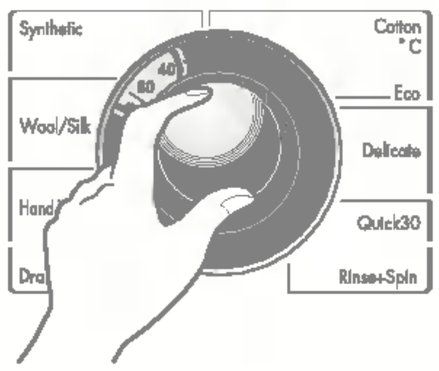

3. The language is finally selected by pressing the spin button.



4. Power will be off automatically, after changing language.

5. Confirm the selected language after power on again.



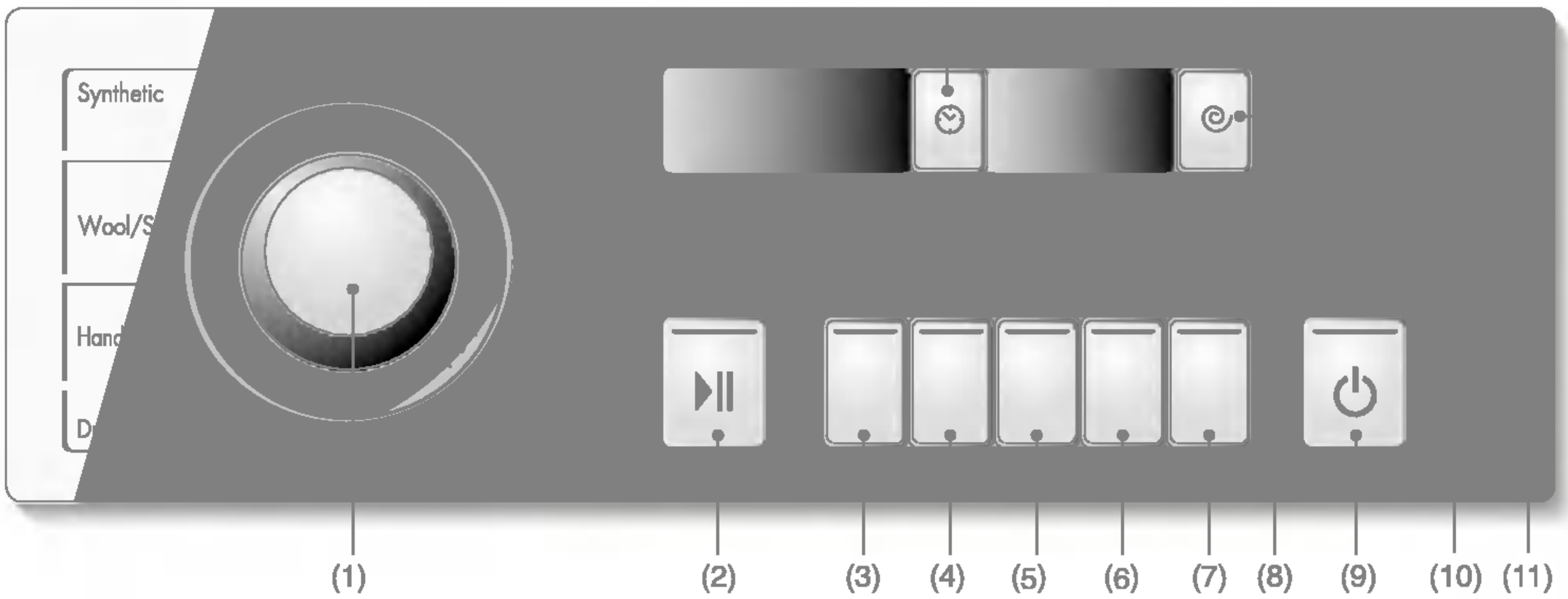

(1) Dial : Program
(2) Button : Start / Pause
(3) Button : Intensive
(4) Button : Rinse Hold
(5) Button : Rinse+
(6) Button : Pre Wash
(7) Button : Crease Care
(8) Button : Child Lock
(9) Button : Power
(10) Button : Spin
(11) Button : Time Delay

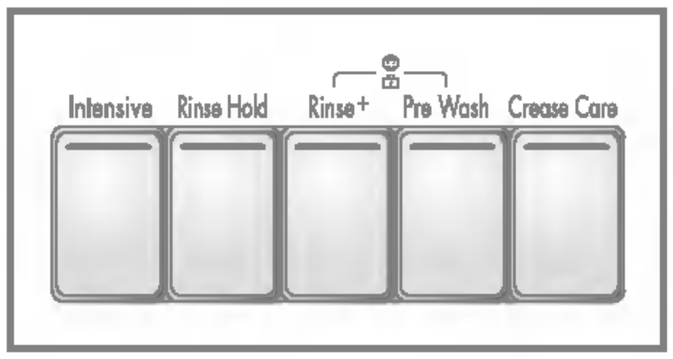

- By pressing the Option button, all Option functions may be selected.

- Intensive *- Rinse+* *- Crease Care*
- Rinse Hold *- Pre Wash*

1. Intensive

- If the laundry is heavily soiled “Intensive” option is effective.
- By selecting the Intensive option, the wash time may be extended, depending on the program selected.
- This Option is not available with Quick 30 program.

2. Rinse Hold

- Is selected by pressing the Rinse Hold button this function leaves clothes in the machine; suspended in the water after a rinse without entering into spin.
- To proceed through to a drain or spin, once the rinse hold function is completed using to program dial scroll to the required program.

3. Rinse+

- For additional rinse which may assist in removing traces of detergent residue.
- By selecting Rinse+ function, the rinse time and the rinse water are increased.

4. Pre Wash

- If the laundry is heavily soiled, “Pre Wash” course is effective.
- Pre Wash is available in Cotton and Synthetic.

5. Crease Care

- If you want to prevent crease, select this button with spin speed.

The required lamp will light up for identification.



(400–600–800–1000–1200)

[WD(M)-12341(6)FD / WD(M)-12340(5)FD]



(400–600–800–1000–1200–1400)

[WD(M)-14341(6)FD / WD(M)-14340(5)FD]



(400–600–800–1000–1200–1400–1600)

[WD(M)-16341(6)FD / WD(M)-16340(5)FD]

• By pressing the **Spin** button, the spin speed can be chosen.

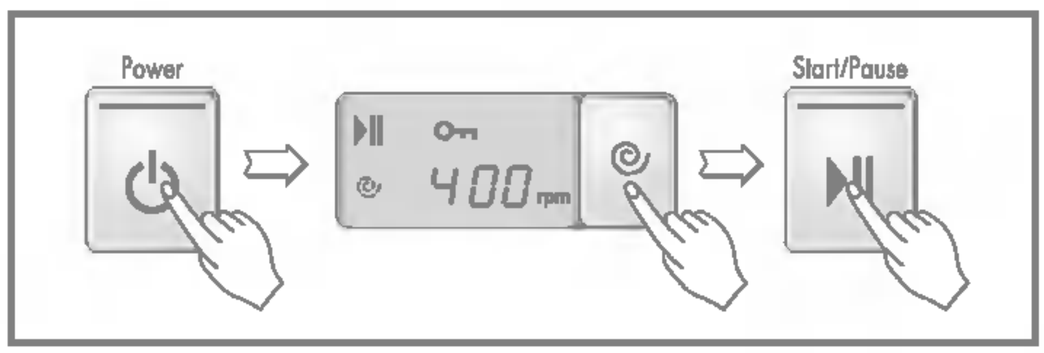

Spin only:
1. Press the **Power** buton.
2. Set the desired spin speed by pressing the **Spin** button.
3. Press the **Start/Pause** button.

1. Spin selection

• Spin Speed is available according to the program as follows.

• **WD(M)-16341(6)FD / WD(M)-16340(5)FD**
- Cotton, Rinse+Spin, Quick 30
  No Spin – 400 – 600 –
  800 – 1000 – 1200– 1400 – 1600
- Synthetic, Wool/Silk, Hand Wash
  No Spin – 400 – 600 – 800 – 1000
- Delicate
  No Spin – 400 – 600 – 800

• **WD(M)-14341(6)FD / WD(M)-14340(5)FD**
- Cotton, Rinse+Spin, Quick 30
  No Spin – 400 – 600 –
  800 – 1000 – 1200 – 1400
- Synthetic, Wool/Silk, Hand Wash
  No Spin – 400 – 600 – 800 – 1000
- Delicate
  No Spin – 400 – 600 – 800

• **WD(M)-12341(6)FD / WD(M)-12340(5)FD**
- Cotton, Rinse+Spin, Quick 30
  No Spin – 400 – 600 – 800 – 1000 – 1200
- Synthetic, Wool/Silk, Hand Wash
  No Spin – 400 – 600 – 800 – 1000
- Delicate
  No Spin – 400 – 600 – 800

2. No spin ( )

• If no spin is selected, the washer stops after draining water.

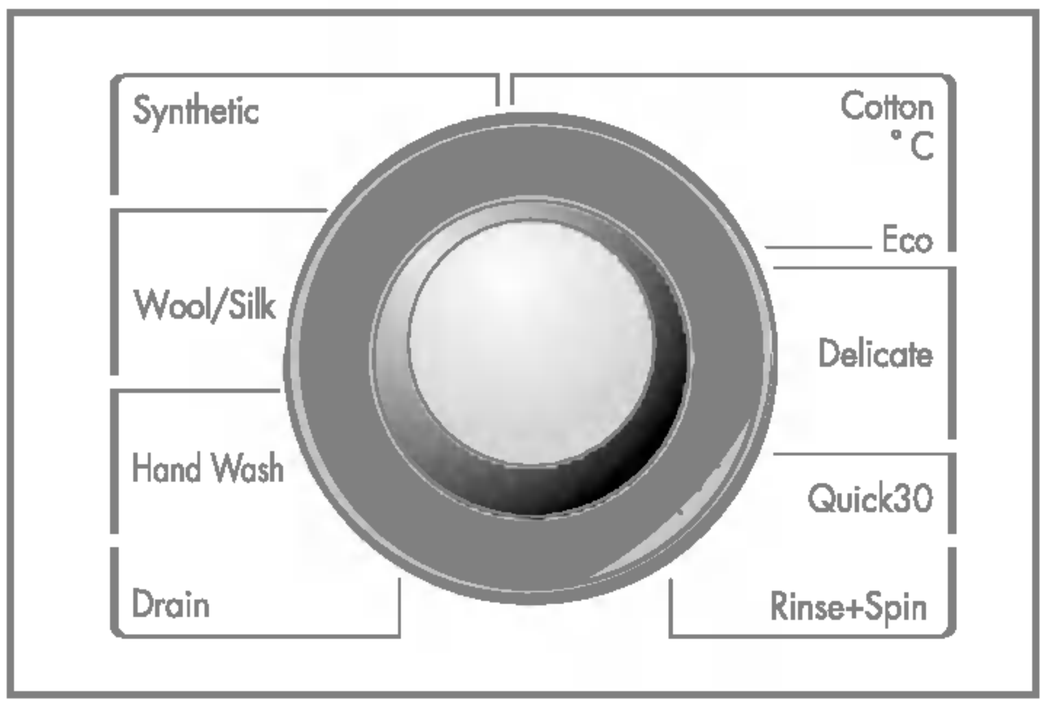

- By turning the Program Dial, the water temperature can be selected.

- Cold

- 30℃ / 40℃ / 60℃ / 95℃

- Water temperature can be selected according to the program.

The required temperature lamp will light up for identification.

For the more detailed information, please refer to the page13.

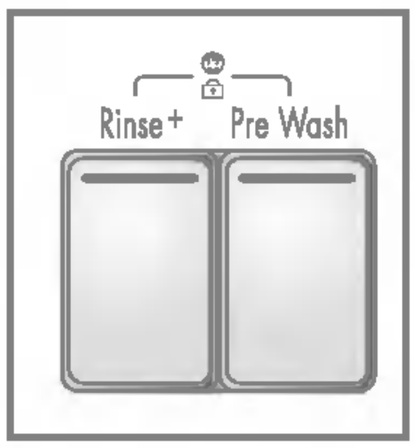

If you choose to lock the buttons on the control assembly to prevent tampering this function may be selected.

1. Child Lock

- Child Lock can be set by pressing the **Rinse+** button and **Pre Wash** button simultaneously. (About three seconds)

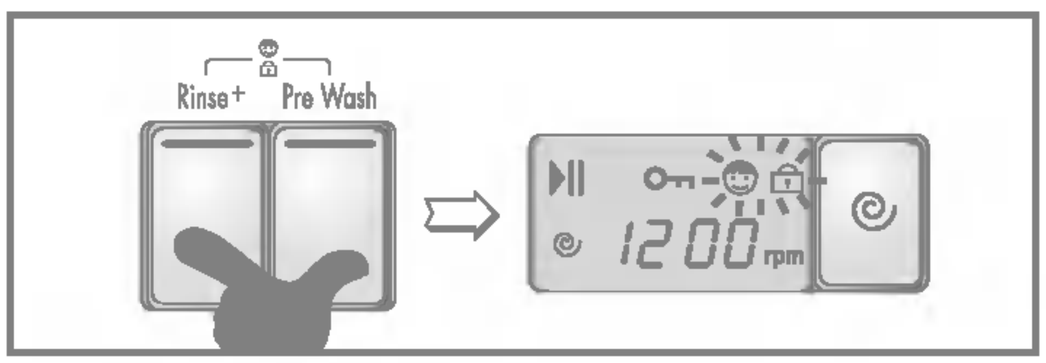

- *When child lock is set, all buttons are locked except for power button.*
- To deactivate Child Lock system, press **Rinse+** and **Pre Wash** buttons simultaneously again. (About three seconds)

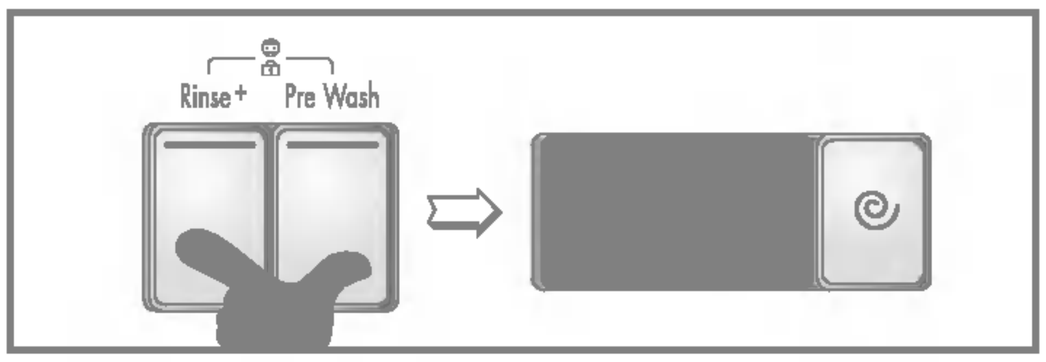

- To change to the desired program, whilst in child lock mode.

1. Press both **Rinse+** and **Pre Wash** together once again. (About three seconds)

2. Press the **Start/Pause** button.

3. Select the desired program and press the **Start/Pause** button again.

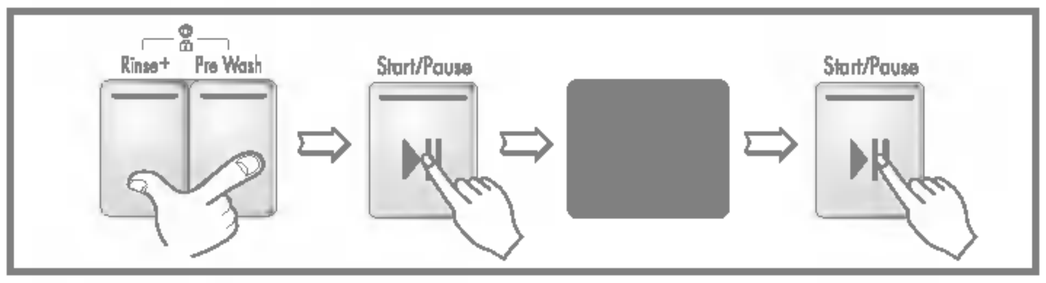

- The child lock can be set at any time and it is automatically canceled when operational errors occur. Also ***Child Lock*** works when power is off.

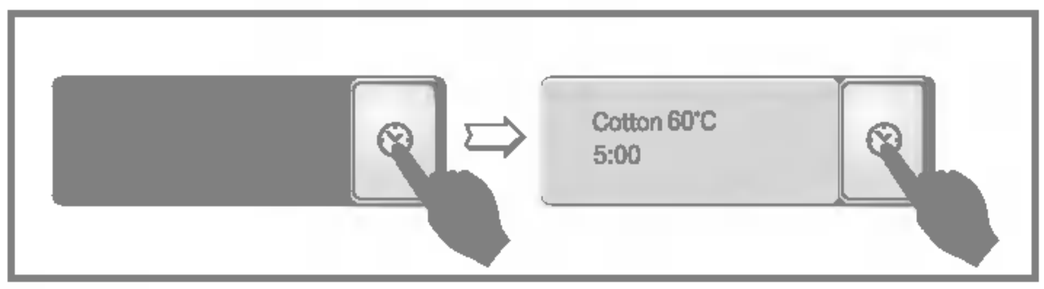

1. Time Delay

Preparing washing before starting
"Time Delay"

- Turn on the water tap.
- Load laundry and close the door.
- Place the detergent and fabric softener in the drawer.

• How to set "Time Delay"
  - Press **Power** button.
  - Turn the **Program** dial to select the program you require.
  - Press **Time Delay** button and set the desired time.
  - Press the **Start/Pause** button.

• If **Time Delay** button is pressed, "3:00" is displayed. The maximum delayed time is 19 hours and the minimum time is 3 hours.

• Each pressing of the button advances on time delay by one hour.

• To cancel the time delay, press the **Power** button.

• **Time Delay** is 'expected time' from the present to the completion of washing cycle or selected process (Wash, Rinse, Spin).

• ***According to the condition of water supply and temperature, the delayed time and the actual washing time may vary.***

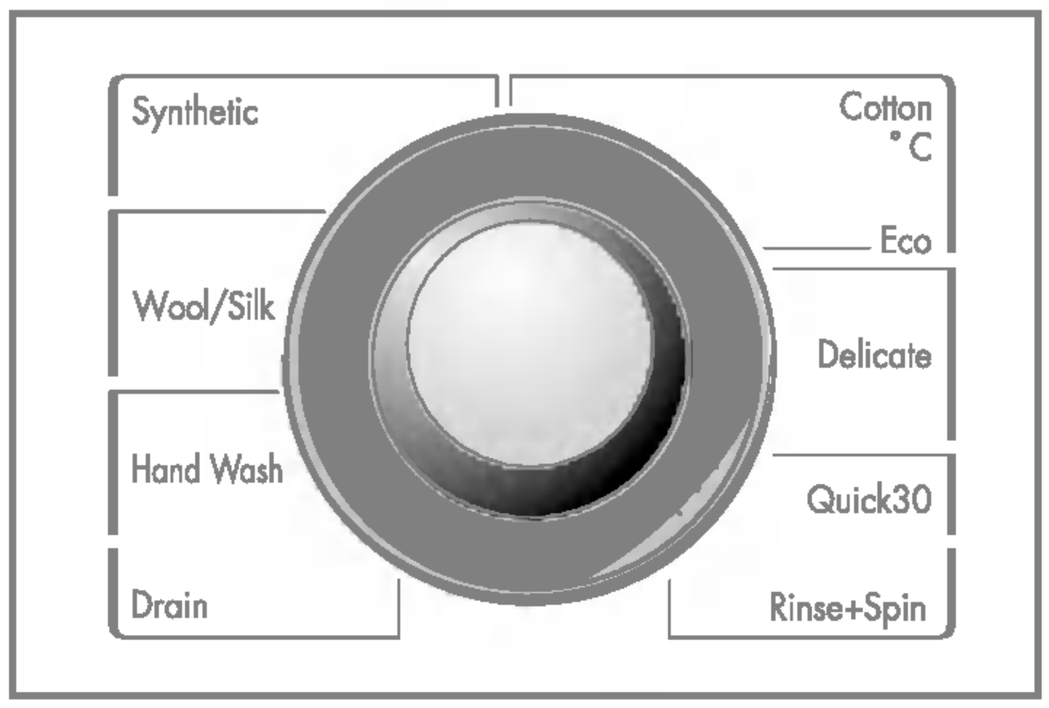

• 8 programs are available according to the laundry type.

• Lamp will light up to indicate selected program.

• When **Start/Pause** button is pressed, the Cotton program is automatically selected.

- By turning the Program dial, the program is selected in order of " Cotton – Delicate – Quick 30 – Rinse+Spin – Drain – Hand Wash – Wool/Silk – Synthetic".

Regarding to the laundry type for each program Please refer to the page13.



1. Start

- This **Start/Pause** button is used to start wash cycle or pause the wash cycle.

2. Pause

- If temporary stop of wash cycle is needed, press the **Start/Pause** button.
- When in Pause, the power is turned off automatically after 4 minutes.
- **NB.** The door will not open before 1 to 2 minutes when Pause is selected, or at the end of the wash cycle.

3. Door Lock



- Lights whenever the door of the washer is locked.
- The door can be unlocked by pressing the Start/Pause button to stop the washer.
- The door can be opened after a short delay.

4. Detecting



- While the "Detecting" is shown in the display the machine rotates slowly and detects how many laundries are loaded in the drum. It will take a few seconds.
- Available in Cotton, Cotton-Eco.

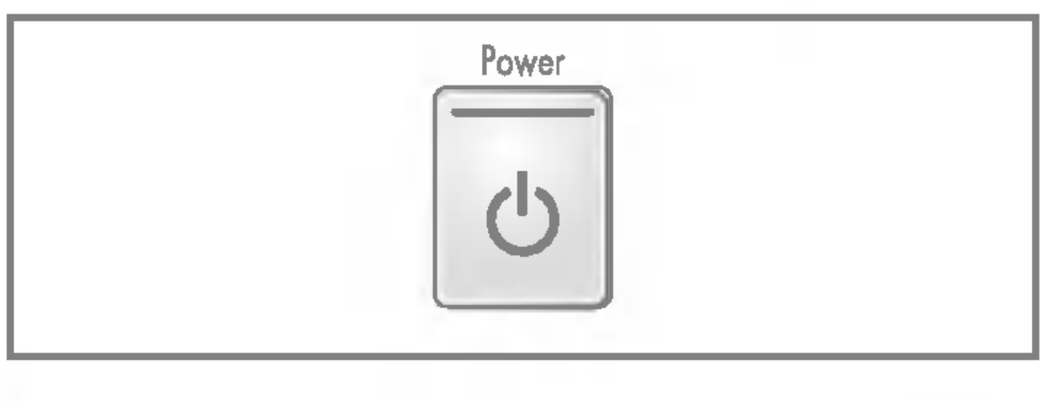

1. Power

- Press the Power button to turn power on and off
- To cancel the Time Delay function, the power button should be pressed.

2. Initial Program

- When the Power button is pressed, the washer is ready for Cotton program. And the other initial conditions as follows.
- So, if you want to advance into the washing cycle without changing the program, just press the **Start/Pause** button and then the washer will proceed.

Initial program

[WD(M)-16341(6)FD / WD(M)-16340(5)FD]

- Cotton Program / Main wash / Normal Rinse / 1600 rpm / 60°C

[WD(M)-14341(6)FD / WD(M)-14340(5)FD]

- Cotton Program / Main wash / Normal Rinse / 1400 rpm / 60°C

[WD(M)-12341(6)FD / WD(M)-12340(5)FD]

- Cotton Program / Main wash / Normal Rinse / 1200 rpm / 60°C



1. Special function display

- When Child lock is selected, the "🔒" is displayed.
- When time delay is selected, it shows the remaining time to finish the selected program.

2. Self diagnosis display

- If the washer encounters a fault during operation, the associated fault will be displayed.

"PE" : Water pressure sensing error

"FE" : Problem of overfilling water

"tE" : Water temperature trouble

"LE" : Over load in motor

"CE" : Over load in motor

" **Door open** " : Door is not closed

" **No water supply.** " : Water inlet trouble

" **Not draining** " : Drainage trouble

" **No spining** " : Unbalanced load

If these error letters are displayed, please refer to the troubleshooting page26 and follow the guide.

3. Completion of washing

- When washing cycle is completed, "End" is displayed on the "***Multi display***".

4. Time left

- During washing cycle, the remaining washing time is displayed.
- Recommended program by manufacturer.

※ [ ] : WD(M)-14341(6)FD / WD(M)-14340(5)FD
( ) : WD(M)-12341(6)FD / WD(M)-12340(5)FD

- Cotton 95°C :
  around 2 hours and 3 minutes
  [around 1 hour and 57 minutes]
  (around 1 hour and 57 minutes)
- Cotton 60°C :
  around 1 hour and 46[40](40) minutes
- Synthetic : around 1 hour and 20 minutes
- Delicate : around 52 minutes
- Wool/Silk : around 50 minutes
- Hand Wash : around 44 minutes
- Quick 30 : around 30 minutes
- Rinse+Spin : around 24 [21](18)minutes
- Drain : around 1 minute

- The washing time may vary by the amount of laundry, water pressure, water temperature and other washing conditions.
- If an unbalanced load is detected or if the suds removing program operates, the wash time may be extended.
  (Max. increasing time is 45 minutes.)

❋ **Before cleaning the washer interior, unplug the electrical power cord to avoid electrical shock to avoid electrical shock hazards.**

❋ **When disposing of the appliance, cut off the mains cable, and destroy the plug Disable the door lock to prevent young children being trapped inside.**

■ The water inlet filter

- " IE " error message will blink on the control panel when water does not enter the detergent drawer.
- If your water is very hard or contains traces of lime deposit, the water inlet filter may become clogged.
  It is therefore a good idea to clean it from time to time.

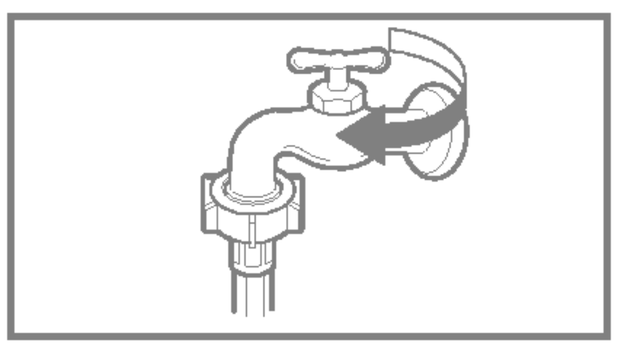

1. Turn off the water tap.

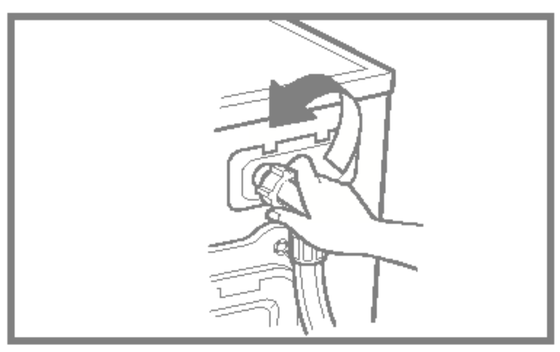

2. Unscrew the water inlet hose.

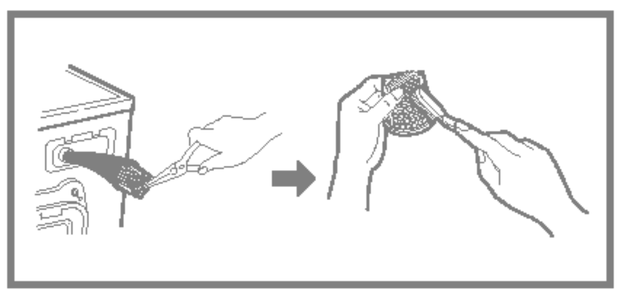

3. Clean the filter using a hard bristle brush.

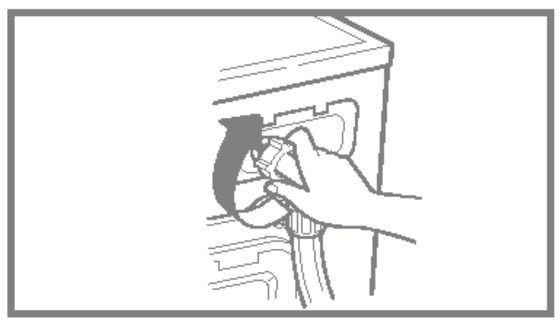

4. Tighten up the inlet hose.

■ The drain pump filter

❋ The drain filter collects threads and small objects left in the laundry.
Check regularly that the filter is clean to ensure smooth running of your machine.

▲ **CAUTION** First drain using “Drain” program and then open the pump filter to remove whatever any threads or objects.
Be careful when draining if the water is hot.

❋ Allow the water to cool down before cleaning the drain pump, carrying out emergency emptying or opening the door in an emergency.

1. Open the lower cover cap (①) by using a coin. Drain plug (②) to pull out the hose.

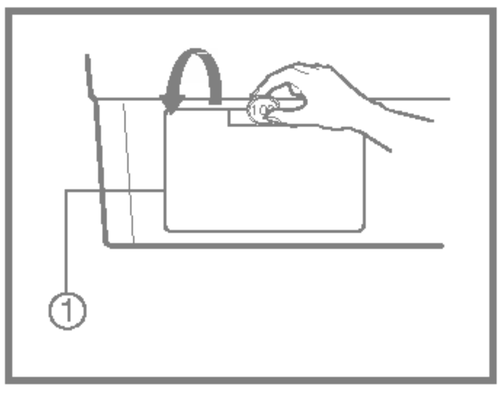

2. Unplug the drain plug (②), allowing the water to flow out. At this time use a vessel to prevent water flowing on to the floor. When water does not flow any more, turn the pump filter (③) open to the left.

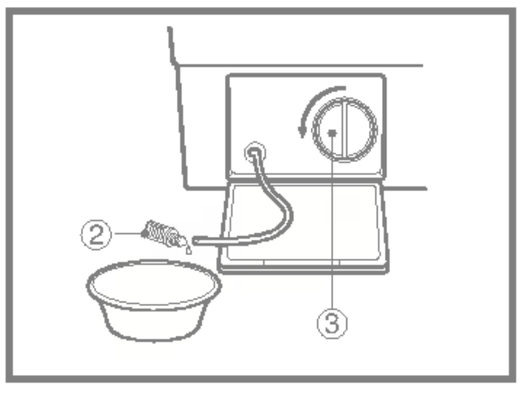

3. Remove any foreign material from the pump filter (③). After cleaning, turn the pump filter (③) clockwise and insert the drain plug (②)to the original place. close the lower cover cap.

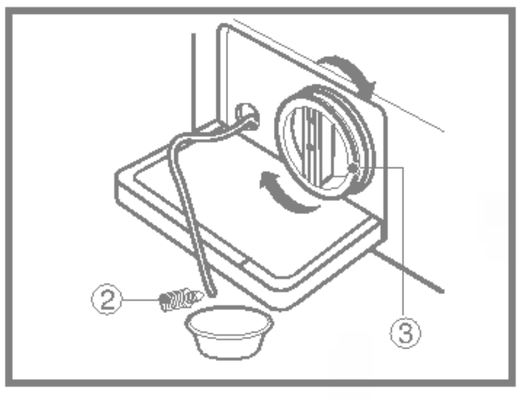

■ Dispenser drawer

❋ After a while detergents and fabric softeners leave a deposit in the drawer.

- It should be cleaned from time to time with a jet of running water.
- If necessary it can be removed completely from the machine by pressing the catch downwards and by pulling it out.
- To facilitate cleaning, the upper part of the fabric softener compartment can be removed.

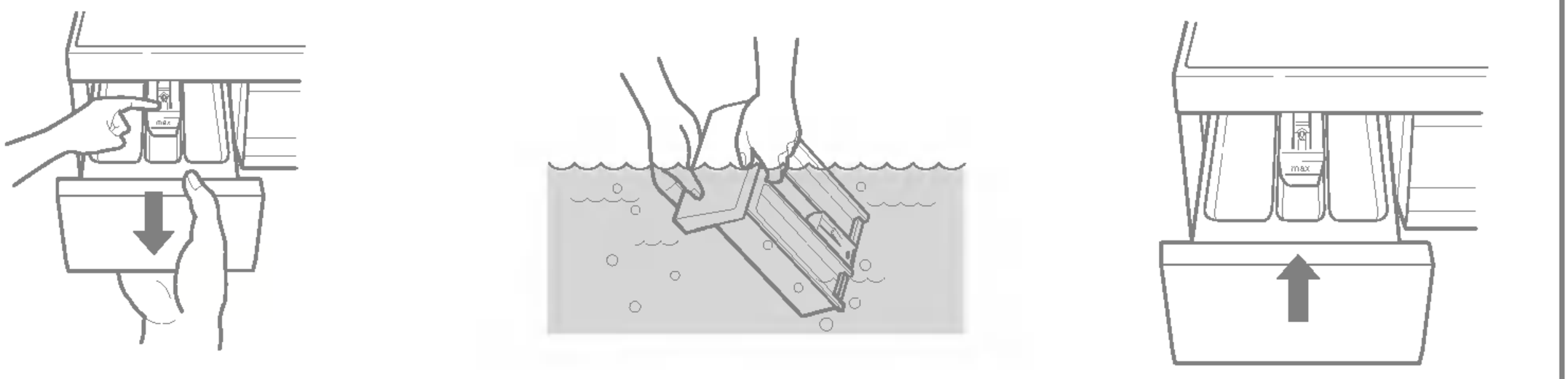

■ The drawer recess

❋ Detergent can also accumulate inside the recess which should be cleaned occasionally with an old toothbrush.

- Once you have finished cleaning, replace the drawer and run a rinse cycle without laundry.

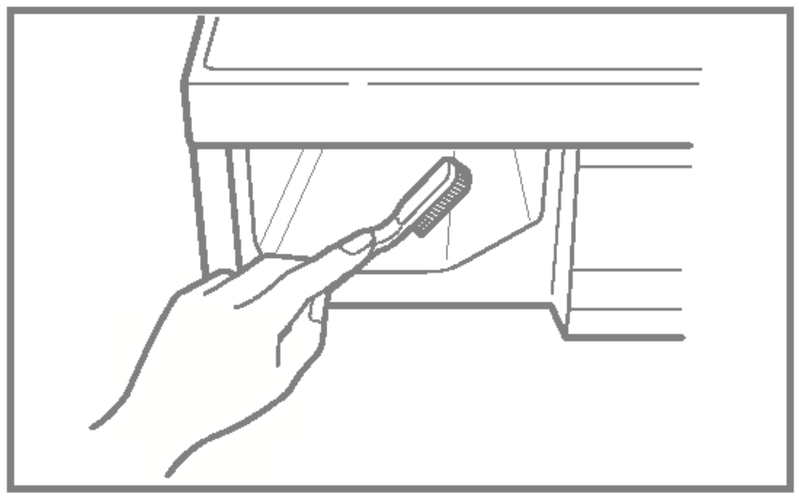

■ The washing drum

- If you live in a hard water area, limescale may continuously build up in places where it cannot be seen and thus not easily removed.
  Over time the build up of scale clogs appliances, and if it is not kept in check these may have to be replaced.
- Although the washing drum is made of Stainless steel, specks of rust can be caused by small metal articles (paper clips, safety pins) which have been left in the drum.
- The washing drum should be cleaned from time to time.
- If you use descaling agents, dyes or bleaches, make sure they are suitable for washing machine use.

❋ Descaler may contain chemicals that may damage part of your washing machine.

❋ Remove any spots with a stainless steel cleaning agent.

❋ Never use steel wool.

■ The water circulation nozzle

• Clean the water circulation nozzle, if clogged.

■ Cleaning your washer

1. Exterior

Proper care of your washer can extend its life.

The outside of the machine can be cleaned with warm water and a neutral non abrasive household detergent.

Immediately wipe off any spills. Wipe with damp cloth.

Try not to hit surface with sharp objects.

❋ IMPORTANT: Do not use methylated spirits, diluents or similar products.

2. Interior

Dry around the washer door opening, flexible gasket and door glass.

Run washer through a complete cycle using hot water.
Repeat process if necessary.

NOTE Remove hard water deposits using only cleaners labeled as washer safe.

■ Cold condition

If the washer is stored in an area where freezing may occur or moved in freezing temperatures, follow these instructions to prevent damage to the washer:

1. Turn off water supply tap.

2. Disconnect hoses from water supply and drain water from hoses.

3. Plug electrical cord into a properly grounded electrical outlet.

4. Add 1gallon(3.8L) of nontoxic recreational vehicle(RV) antifreeze into an empty wash drum. Close the door.

5. Set spin cycle and let washer spin for 1minute to drain out all water.
Not all of the RV antifreeze will be expelled.

6. Unplug electrical power cord, dry the drum interior, and close the door.

7. Remove dispenser drawer drain and dry excessive water from the compartments.

8. Storе washer in an uprignt position.

9. To remove antifreeze from washer after storage, run empty washer through a complete cycle using detergent. Do not add wash load.

* This washing machine is equipped with automatic safety functions which detect and diagnose faults at an early stage and react appropriately
  When the machine does not function properly or does not function at all, check the following points before you contact your service provider.

Symptom	Possible Cause	Solution
Rattling and clanking noise	• Foreign objects such as coins or safety pins maybe in drum or pump.	Stop washer and check drum and drain filter. If noise continues after washer is restarted, call your authorised service centre.
Thumping sound	• Heavy wash loads may produce a thumping sound. This is usually normal.	If sound continues, washer is probably out of balance. Stop and redistribute wash load.
Vibrating noise	• Have all the transit bolts and packing been removed? • Are all the feet resting firmly on the ground?	If not removed during installation. Refer to Installation guide for removing transit bolts. Wash load may be unevenly distributed in drum. Stop washer and rearrange wash load.
Water leaks.	• Fill hoses or drain hose are loose at tap or washer.	Check and tighten hose connections.
	• House drain pipes are clogged.	Unclog drain pipe. Contact plumber if necessary.
Oversudsing		Too much detergent or unsuitable detergent may cause excessive foaming which may result in water leaks.
Water does not enter washer or it enters slowly	• Water supply is not adequate in area.	Check another tap in the house.
	• Water supply tap is not completely open.	Fully open tap.
	• Water inlet hose(s) are kinked.	Straighten hose.
	• The filter of the inlet hose(s) clogged.	Check the filter of the inlet hose.
Water in the washer does not drain or drains slowly.	• Drain hose is kinked or clogged.	Clean and straighten the drain hose.
	• The drain filter is clogged.	Clean the drain filter

Symptom	Possible Cause	Solution
Washer does not start	• Electrical power cord may not be plugged in or connection may be loose.	Make sure plug fits tightly in wall outlet.
	• House fuse blown, circuit breaker tripped,or a power outage has occurred.	Reset circuit breaker or replace fuse. Do not increase fuse capacity. If problem is a circuit overload, have it corrected by a qualified electrician.
	• Water supply tap is not turned on.	Turn on water supply tap.
Washer will not spin	❋ Check that the door is firmly shut.	Close the door and press the Start/Pause button. After pressing the Start/Pause button, it may take a few moments before the clothes washer begins to spin. The door must lock before spin can be achieved.
Door does not open		Once started, the door can not be opened for safety reasons. Wait one or two minutes before opening the door to give the electric locking mechanism time to release.
Wash cycle time delayed		The washing time may vary by the amount of laundry, water pressure, water temperature and other usage conditions. If the imbalance is detected or if the suds removing program works, the wash time shall be increased.

Symptom	Possible Cause	Solution
No water supply Read Owner's manual	• Water supply is not adequate in area • Water supply taps are not completely open. • Water inlet hose(s) are kinked. • The filter of the inlet hose(s) are clogged. • If water leakage occured in the inlet hose, indicator "Ⓐ" will be changed red color. [WD(M)-16340(5)FD/WD(M)-14340(5)FD/ WD(M)-12340(5)FD] 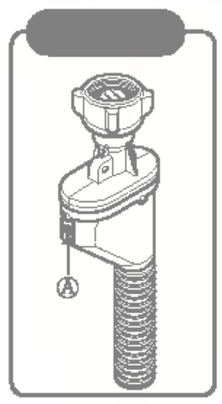	Check another tap in the house. Fully open tap. Straighten hose(s). Check the filter of the inlet hose(s).
Not draining. Read Owner's manual	• Drain hose is kinked or clogged. • The drain filter is clogged.	Clean and straighten the drain hose. Clean the drain filter.
UE Read Owner's manual **No spining.** Read Owner's manual	• Load is too small. • Load is out of balance. • The appliance has an unbalance detection and correction system. If individual heavy articles are loaded (ex. bath mat, both robe, etc.), this system may stop spinning or even interrupt the spin cycle altogether. • If the laundry is still too wet at the end of the cycle, add smaller articles of laundry to balance the load and repeat the spin cycle.	Add 1 or 2 similar items to help balance the load. Rearrange load to allow proper spinning
Door open Close the door.	 • Is the door opened?	Close the door. ❋ If "**Door Open**" is not released, call for service.
tE Read Owner's manual		Unplug the power plug and call for service.
FE Read Owner's manual	• Water overfills due to the faulty water valve.	Close the water tap. Unplug the power plug. Call for service.
PE Read Owner's manual	• Water level sensor has malfunctioned.	
CE Read Owner's manual	• Over load in motor.	
LE Read Owner's manual	• Over load in motor.	

Disposal of your old appliance

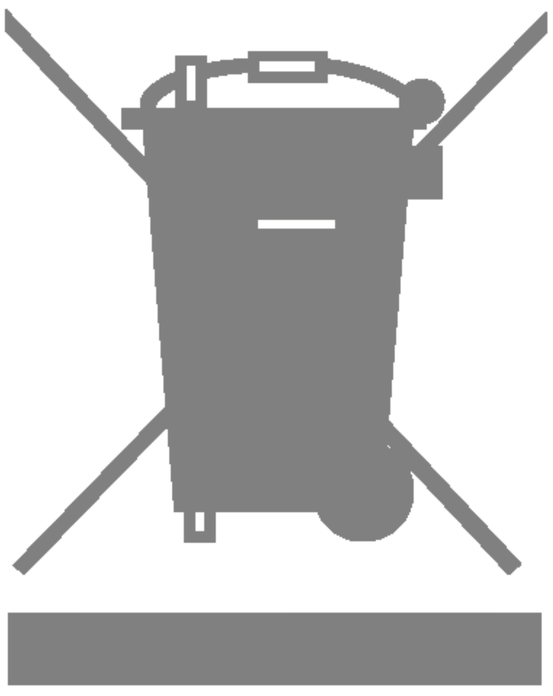

1. When this crossed-out wheeled bin symbol is attached to a product it means the product is covered by the European Directive 2002/96/EC.
2. All electrical and electronic products should be disposed of separately from the municipal waste stream via designated collection facilities appointed by the government or the local authorities.
3. The correct disposal of your old appliance will help prevent potential negative consequences for the environment and human health.
4. For more detailed information about disposal of your old appliance, please contact your city office, waste disposal service or the shop where you purchased the product.

What Is Not Covered:

- Service trips to your home to teach you how to use the product.
- If the product is connected to any voltage other than that shown on the rating plate.
- If the fault is caused by accident, neglect, misuse or Act of God.
- If the fault is caused by factors other than normal domestic use or use in accordance with the owner's manual.
- Provide instruction on use of product or change the set-up of the product.
- If the fault is caused by pests for example, rats or cockroaches etc..
- Noise or vibration that is considered normal for example water drain sound, spin sound, or warming beeps.
- Correcting the installation for example, levelling the product, adjustment of drain.
- Normal maintenance which recommended by the owner's manual.
- Removal of foreign objects / substances from the machine, including the pump and inlet hose filter for example, grit, nails, bra wires, buttons etc.
- Replace fuses in or correct house wiring or correct house plumbing.
- Correction of unauthorized repairs.
- Incidental or consequential damage to personal property caused by possible defects with this appliance.
- If this product is used for commercial purpose, it is not warranted.

(Example : Public places such as public bathroom, lodging house, training center, dormitory)

If the product is installed outside the normal service area, any cost of transportation involved in the repair of the product, or the replacement of a defective part, shall be borne by the owner.