Model	VC716HT* VC717HT* VC716HS* VC717HS*		
Language	ENGLISH		
Page	20	Color(cover/body)	2/2
Material	Weight 100g	Size(W*H)	260*190mm
Date	2005.06.27	Designer	Yu Song
Part No.	3828F13833G	Description	Owner's Manual

Chage Record

No.	Change content	ECO No.	Date	Designer	Confirm
△1					
△2					
△3					
△4					
△5					
△6					
△7					
△8					
△9					

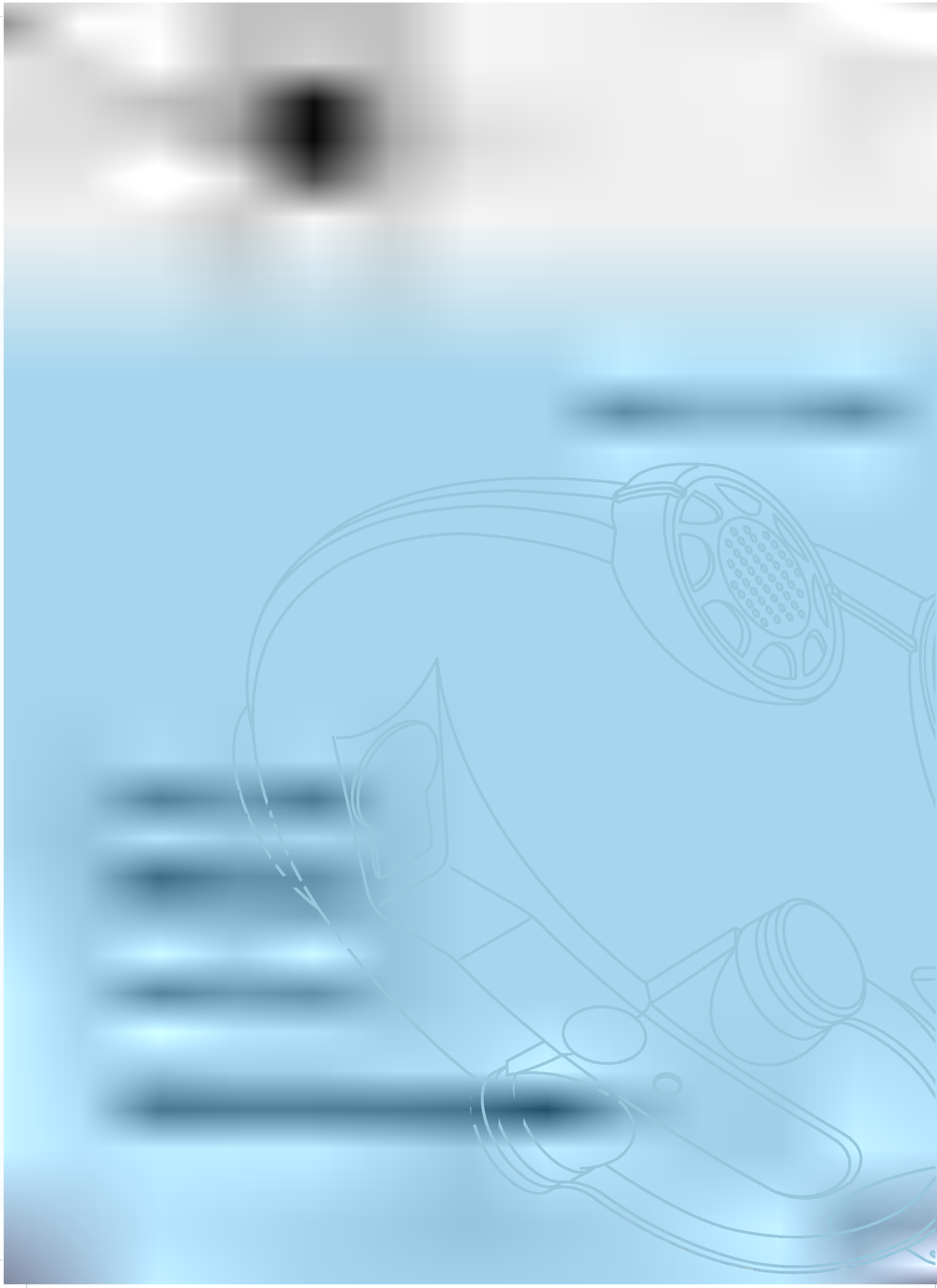

Table of contents

Information for your safety 3

How to use 4

Assembling cleaner 4

Using the cleaning head and Accessory Nozzles 6

Emptying the dust chamber 8

Operation 9

Adjusting the power level 9

How to plug in and use 9

Park-System 9

Cleaning the motor filter / Air Cleaner 10

Cleaning the dust chamber 11

Cleaning the exhaust filters 11

User's guide for sani punch vacuum nozzle 12

Features 12

Cleaning Vacuum Nozzle for Bedding 14

What to do if your appliance does not work 16

What to do when the suction performance reduces? 16

Information for your safety

Please read all the following information, which contains important instructions for the safety, the use and the maintenance of the appliance.
This appliance complies with the following EC Directives: -73/23/EEC, 93/68/EEC-Low Voltage Directive-89/336EEC -EMC Directive.

❏ Never allow children to use the appliance unsupervised.
❏ Do not use the appliance If the mains lead is damaged or faulty.
❏ If the mains lead is damaged, it must be replaced by an approved LG Electronics Service Agent to avoid a hazard.
❏ Always switch the vacuum cleaner off before:
  • Emptying the dust chamber.
  • Cleaning or changing the filters.
❏ Do not vacuum flammable or explosive substances(liquids or gases).
❏ Do not vacuum hot ash, embers etc. nor sharp objects.
❏ Do not vacuum water or other liquids.
❏ When you vacuum with an attachment appliance that has a rotating brush roller:
  • Do not reach into the running brush roller.

Important for users in the UK.
The wires in the mains lead of this appliance are coloured in accordance with the following code:

BLUE-neutral **BROWN - live**

VERY IMPORTANT:
Neither wire is to be connected to the earth terminal of a 3 pin plug. If a 13 amp plug is fitted, fit a 13 amp **BS 1362 fuse.**
If any other type of plug is used, protect with a 15 amp fuse at the distribution board.
For appliances which come with mains lead and plug moulded on: the plug moulded on to the cord incorporates a fuse.
For replacement use a 13 amp BS 1362 fuse.
Only ASTA approved or certified fuses should be used.
The fuse cover/carrier must be replaced in the event of changing the fuse.

How to use Assembling Cleaner

Fit the large cleaning head onto the end of the tube.

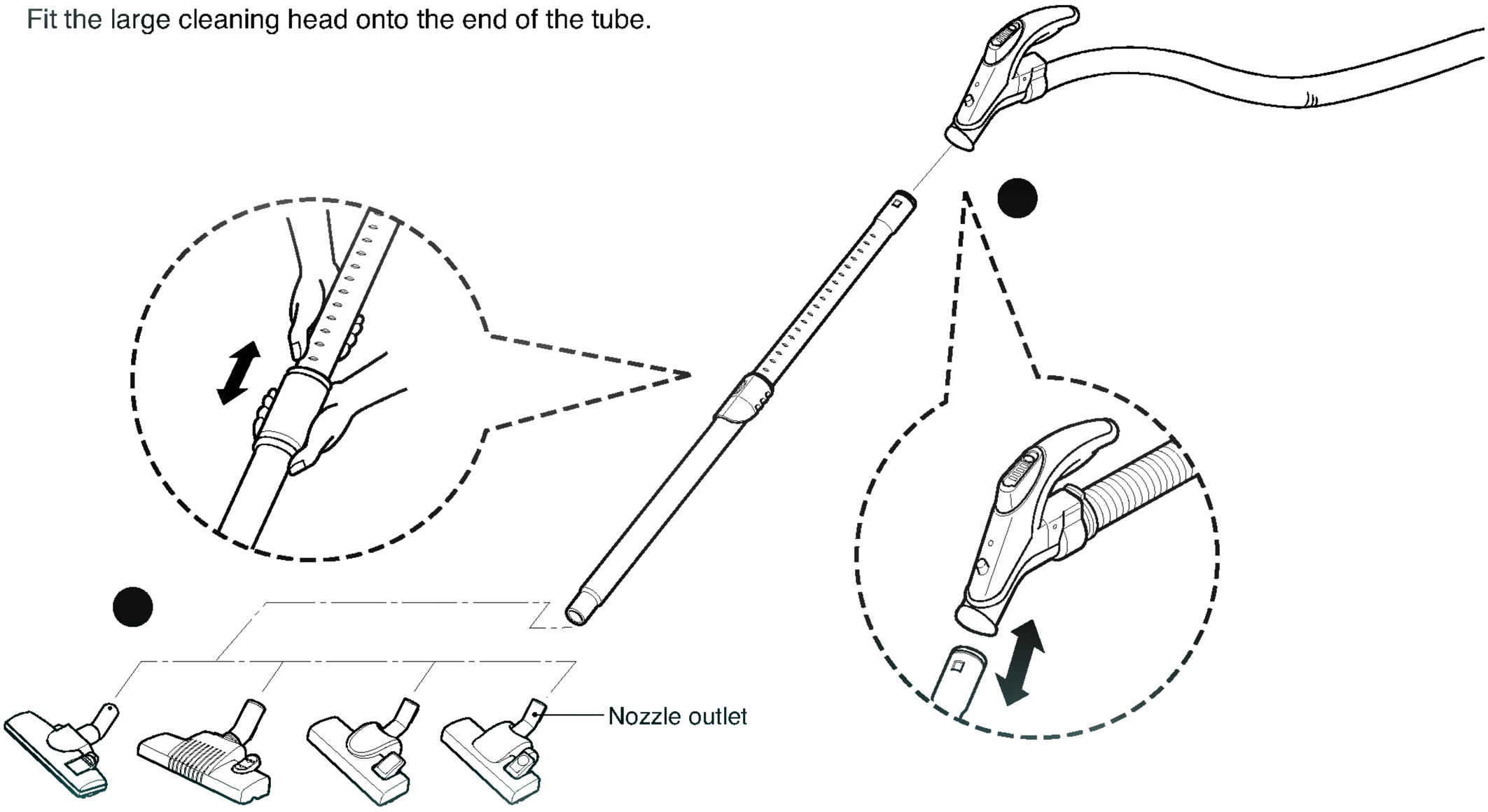

Push telescopic tube into nozzle outlet.

Push telescopic tube into hose handle until catch clicks.

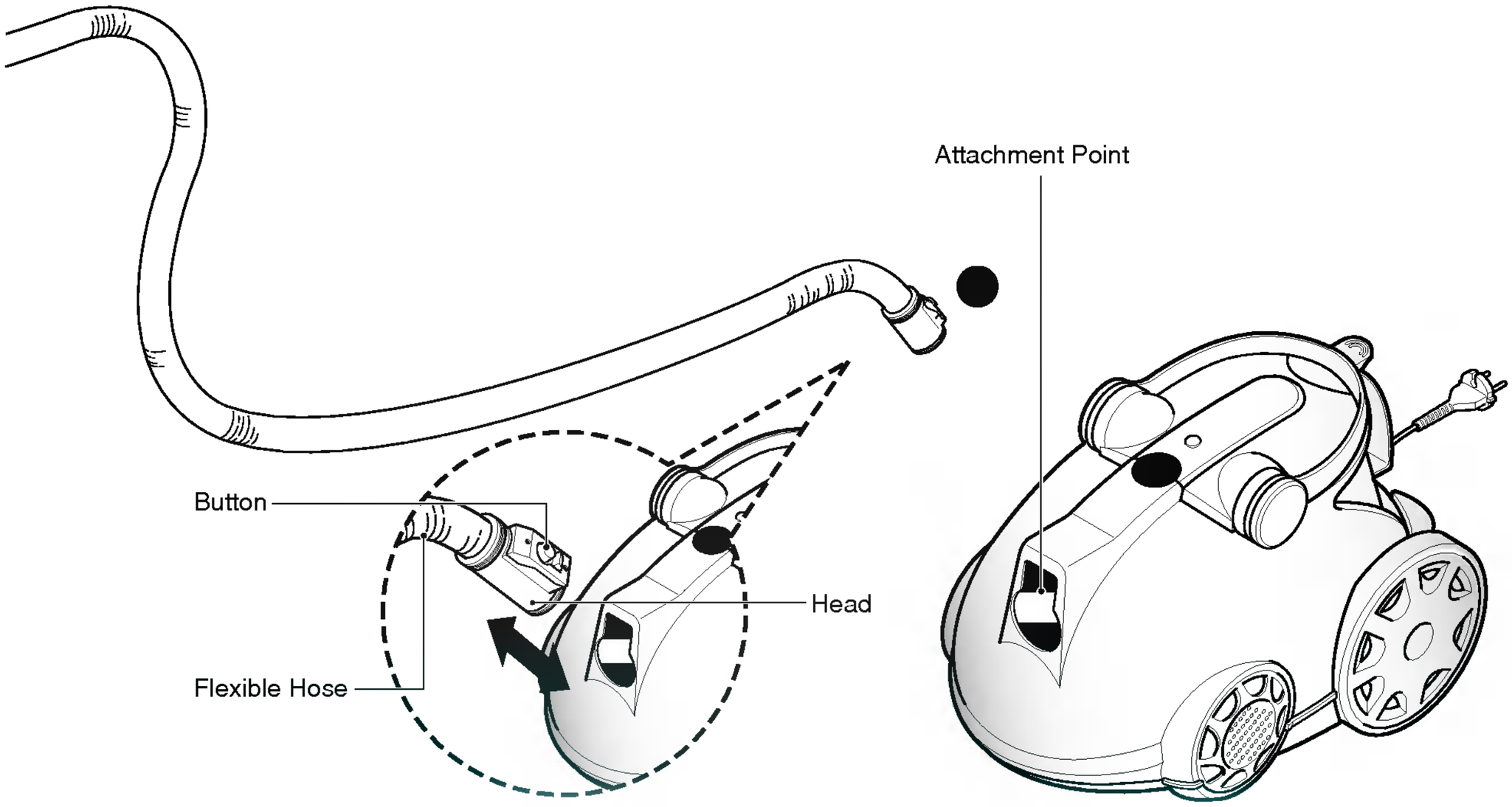

Push the end of the head on the flexible hose into the attachment point on the vacuum cleaner. To remove the flexible hose from the vacuum cleaner, press on the button situated on the head, then pull forward.

How to use Using the cleaning head and Accessory Nozzles

Open the accessory cover and pull out accessory you want.

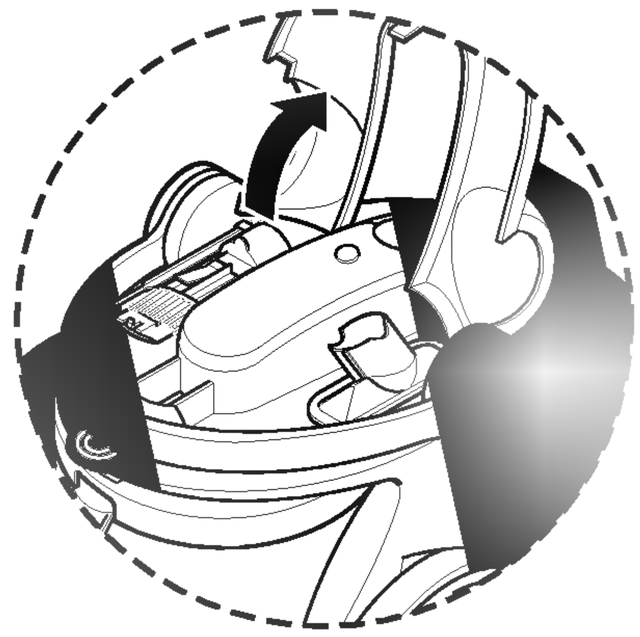

Fit the cleaning head onto the end of the tube.



Upholstery Nozzle is for vacuuming upholstery, mattresses, etc.
The thread collectors help to pick up the threads and fluff.

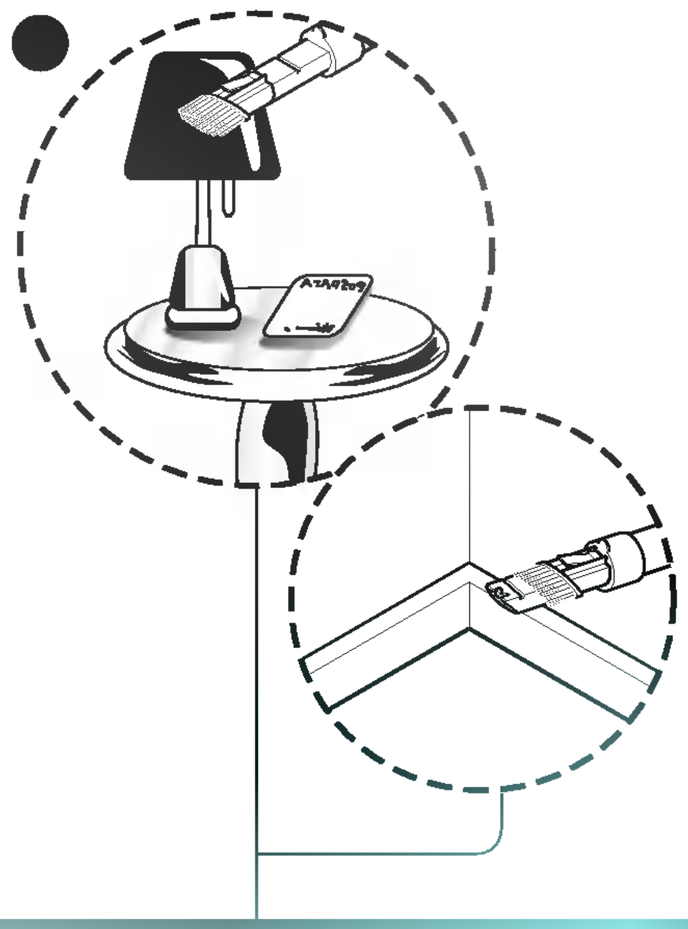

Dusting Brush is for vacuuming picture frames, furniture outlines, books and other uneven objects.
Crevice Tool is for vacuuming in those normally inaccessible places i.e. reaching cobwebs, or down the side of a sofa!

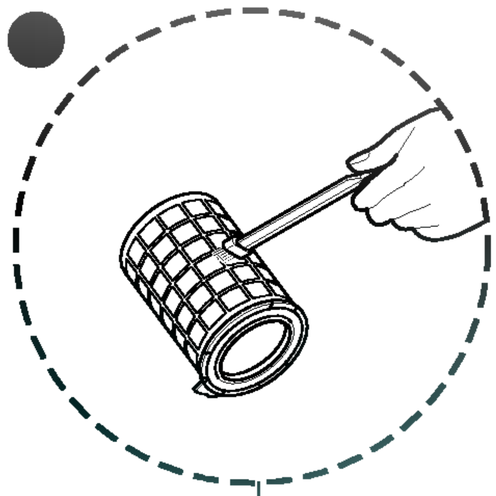

Brush is for cleaning motor filter. (Air cleaner)

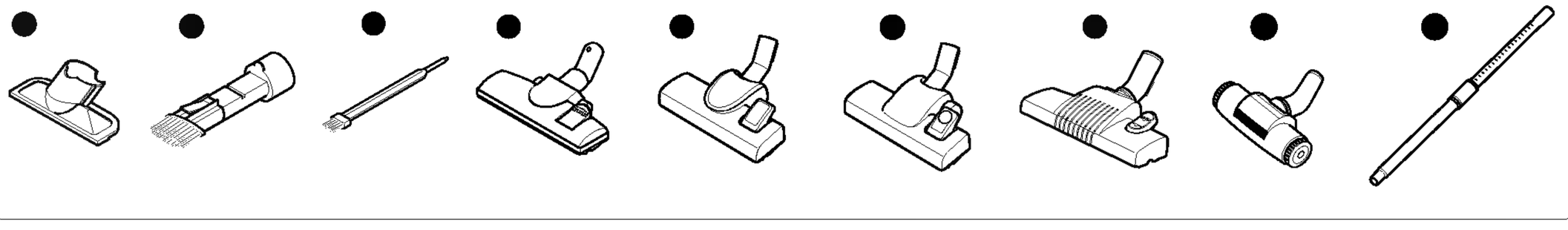

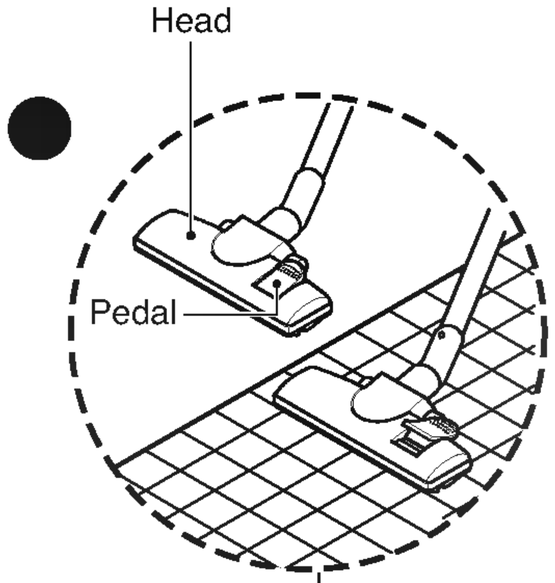

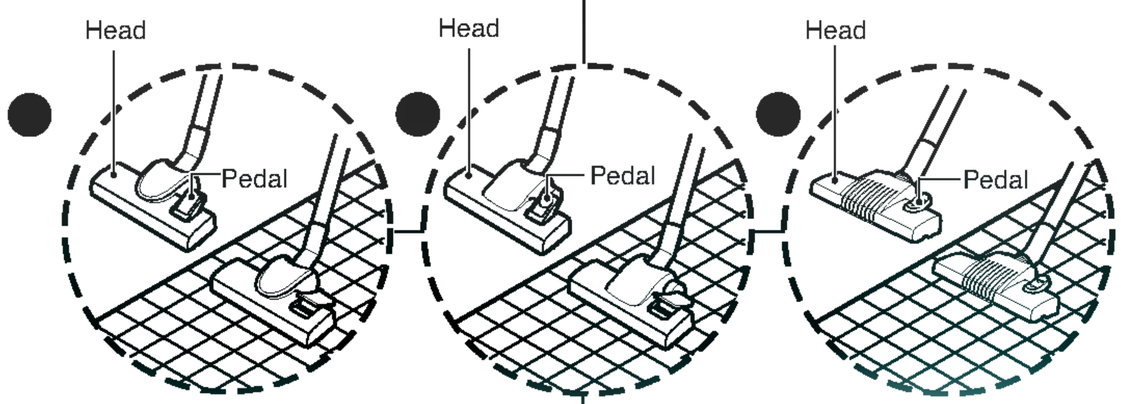

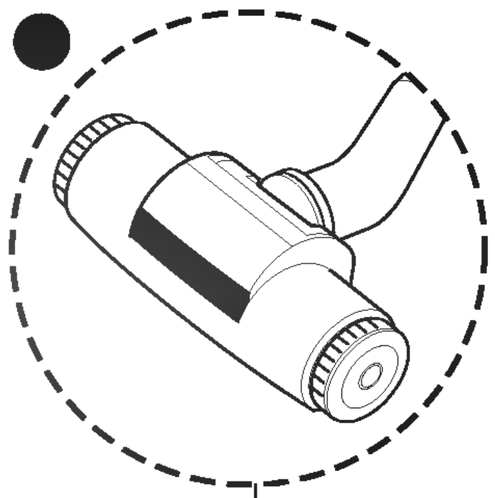

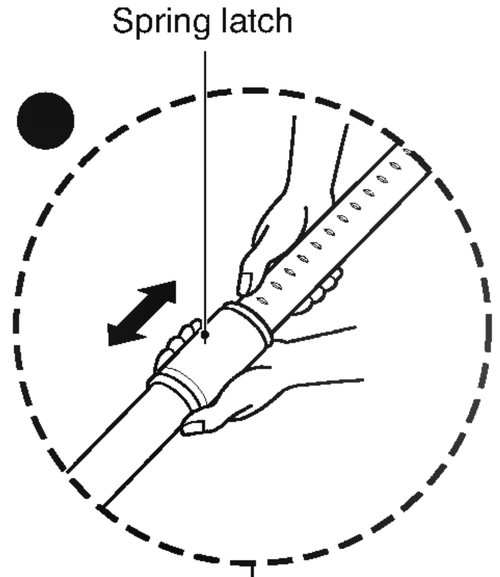

- **The 2 position heads** equipped with a pedal which allows you to alter its position according to the type of floor to be cleaned.
- **Hard floor position (tiles, parquets floor)**
  Press the pedal to lower brush.
- **Carpet or rug position**
  Press the pedal to lift the brush up.

Refer to Page 12~1 .

Telescopic tube
- Pull out tube to required length.
- Release spring latch.

How to use Emptying the dust chamber

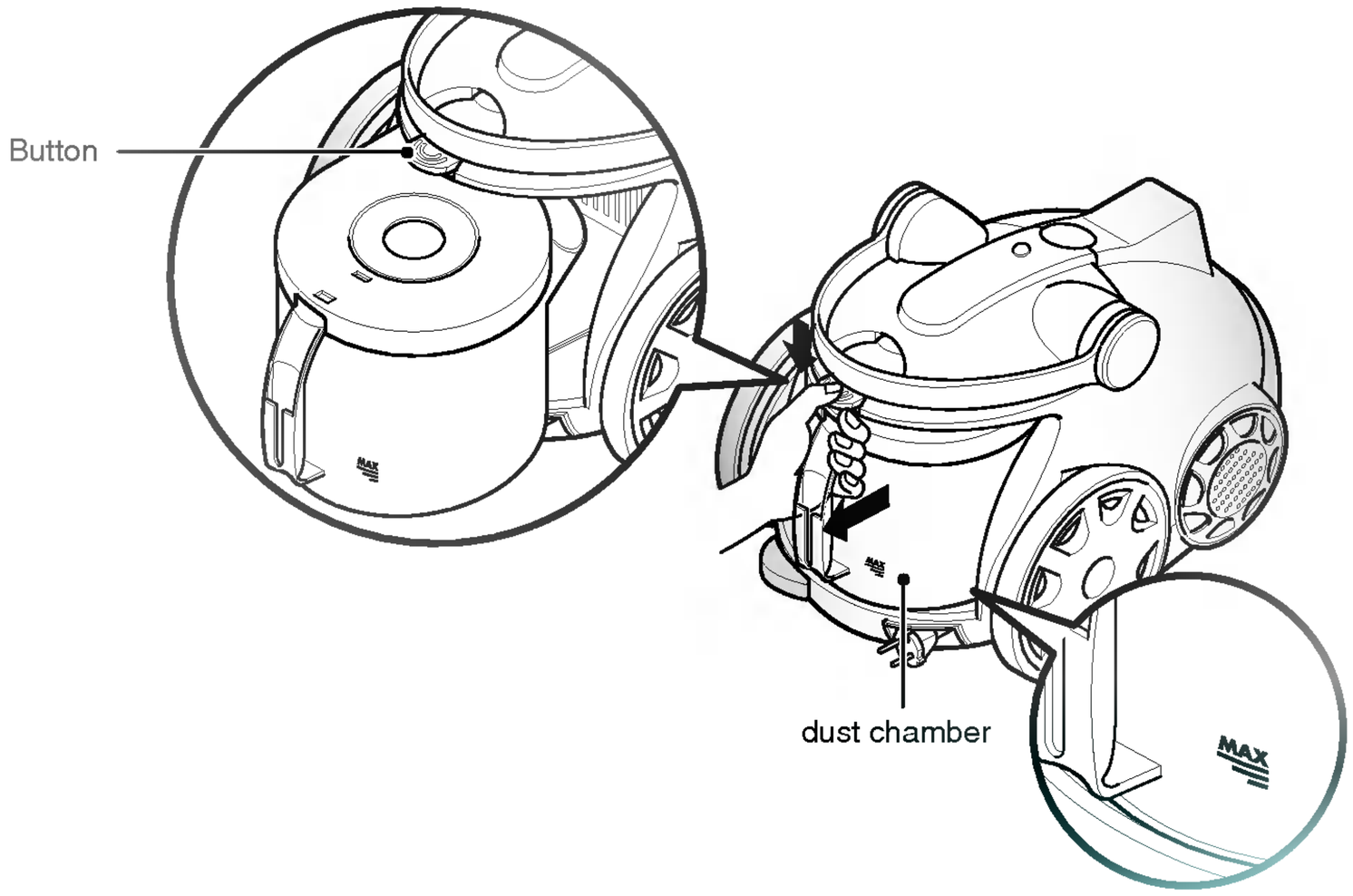

The dust chamber needs emptying when the dust reaches MAX, which is marked on the dust chamber.

- Turn off the appliance and unplug it.
- Your appliance is equipped with both the dust chamber and the motor filter.
  Press the button of the cover and pull the dust chamber forward.
  Remove the dust chamber cap and empty the dust chamber.
- To refit the dust chamber, push the dust chamber into the tank mount until it will go no further.

Operation

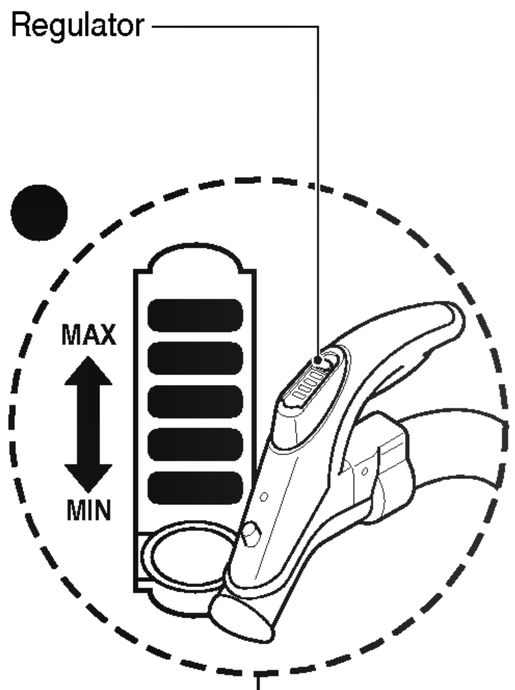

- Adjust power with the power control switch in the handle.
- Push power lever to start the vacuum cleaner.
- To stop it pull the power lever.
- Push power lever to start the vacuum cleaner.
- To stop it pull the power lever.

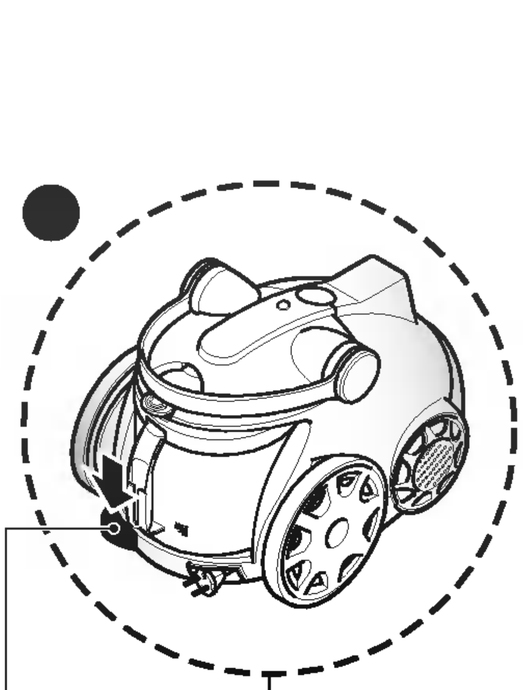

- Pull out the mains lead to the desired length and plug into the socket.
- Depress the cord reel lever to retract the power cord after use.

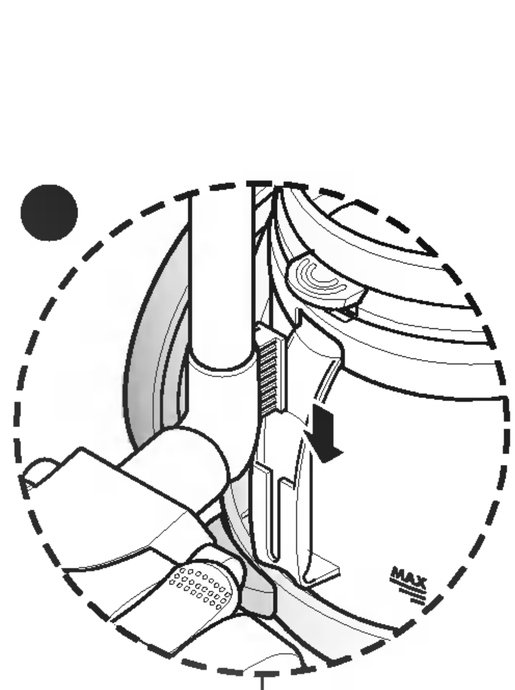

- For pausing while vacuuming, for example to move a small piece of furniture or a rug, use the Park system to support the flexible hose and cleaning head.
  - Slide the hook attached to the large cleaning head into the slot on the rear of the appliance.

How to use Cleaning the motor filter/Air cleaner

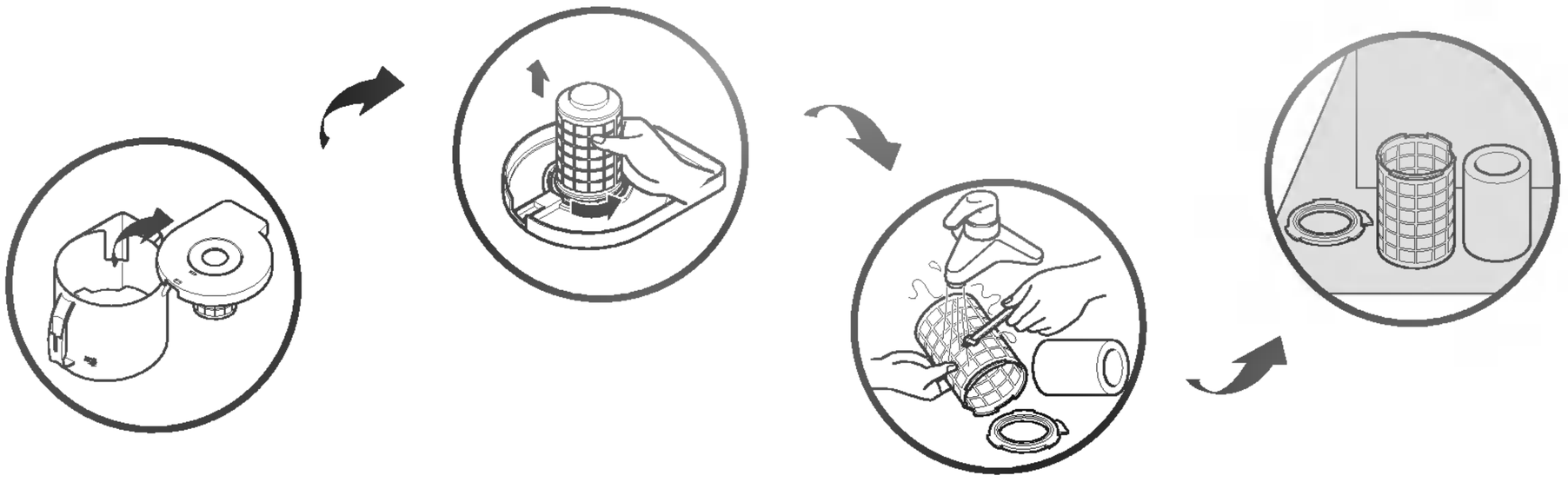

The motor filter is situated under the tank cap and does not need to be changed.
Each time the light comes on, clean the motor filter with water and brush and then replace it in the vacuum cleaner.

- Press the button of cover and pull the dust chamber forward.
- Open the tank cap.
- Separate the motor filter by rotaing it counter-clockwise.
- Clean the motor filter with the brush under a running tap.
- Dry it in shade for a day.Even if the light is not on, wash motor filter at least once every 6 months.

⚠ WARNING!

Gently rinse both parts separately under a cold running tap until the water runsclear.
Do not use detergent or a washing machine or dishwasher.
Your filter may discolour with use, however this will not affect its filtration efficiency.Shake off excess water from the filter.
Do not tumble/spindry, microwave or place in oven or on direct heat.
Ensure the filter is completely dry.
Re-assemble and place it back in your machine, filter frame.
If the filter is damaged, do not place them in the machine.
Please call the Helpline.

Cleaning the dust chamber

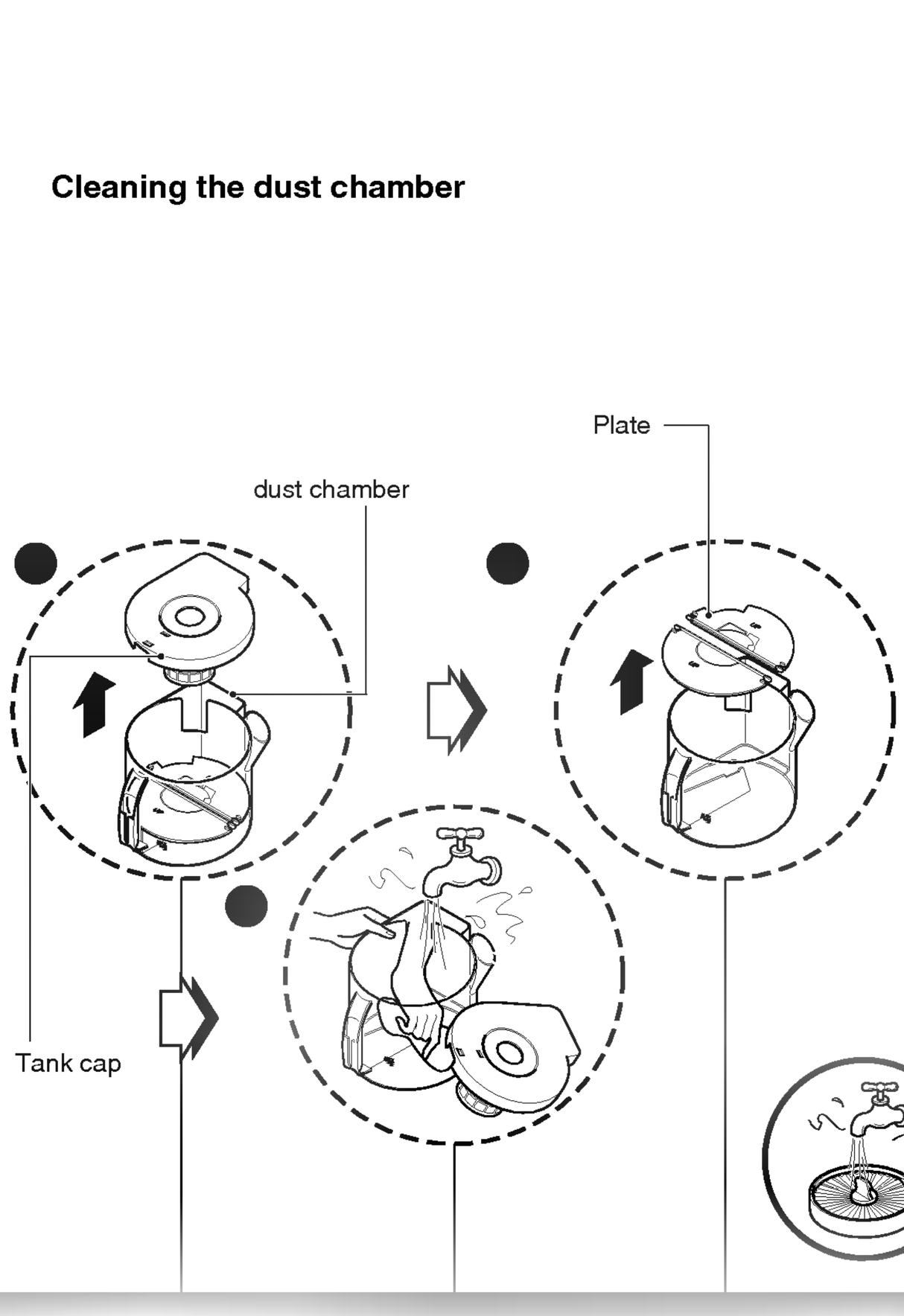

● Open the tank cap.

● Remove two plates from the dust chamber.

● Wash both parts with soft material.
Gently rinse both parts
under a cold running tap.

Cleaning the exhaust filters

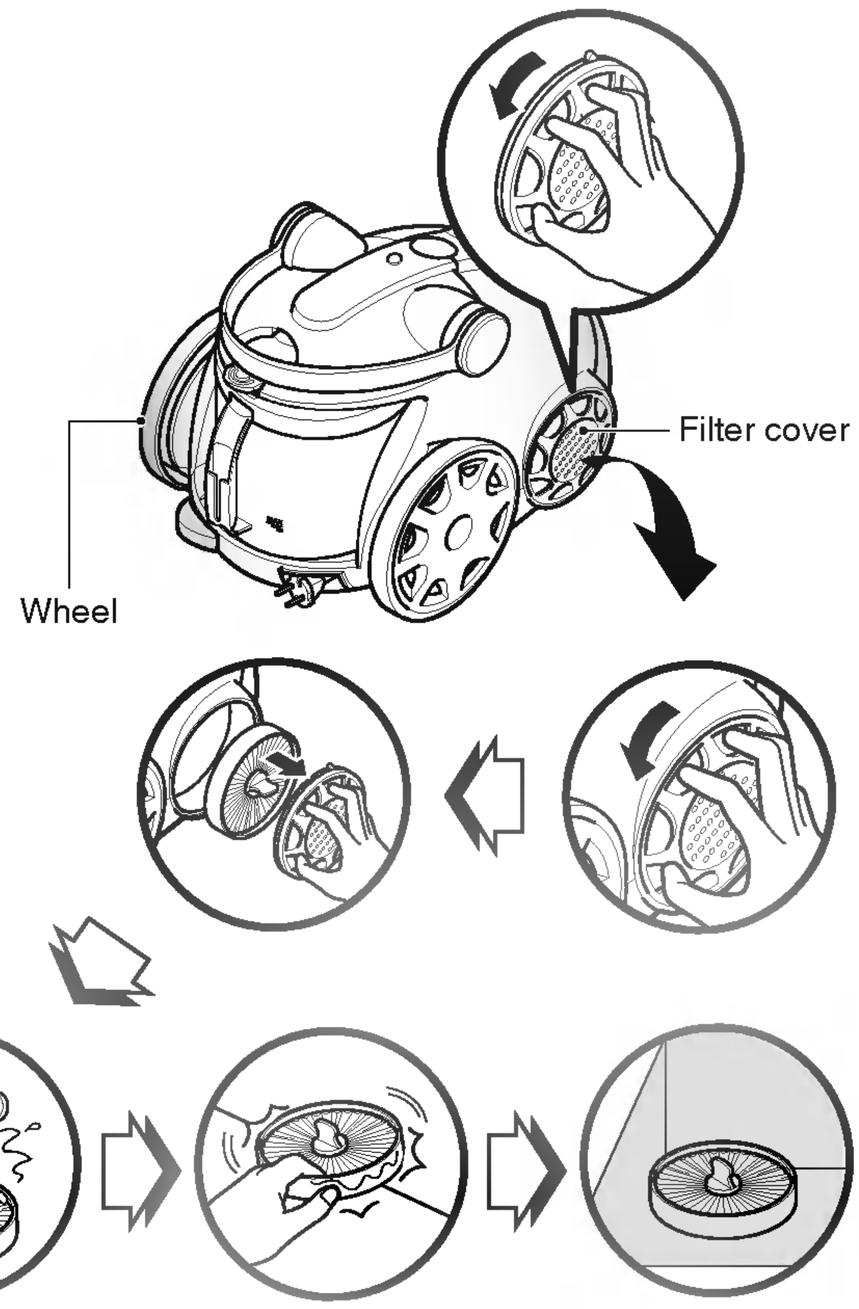

- The exhaust filter is a washable HEPA filter. so you can use it permanently.
- To change the exhaust filter, remove the filter cover on the body by rotating the filter cover counter-clockwise.
- Pull out the exhaust filter.
- Clean it with water.
  Do not use a brush.
  -This will cause permanent damage allowing dust to by-pass the filter.
- Dry it in shade for a day.
- We advise you to clean it at least once a year.

User's guide for sani punch vacuum nozzle

Features

This nozzle picks up even dust inside through beating.
The bottom part can be separated to be cleaned.
Since the bottom does not stick to the surface, vacuuming is easy.

How to use

Follow the directions below for proper use.

Assembly
Connect the nozzle to the telescopic tube.

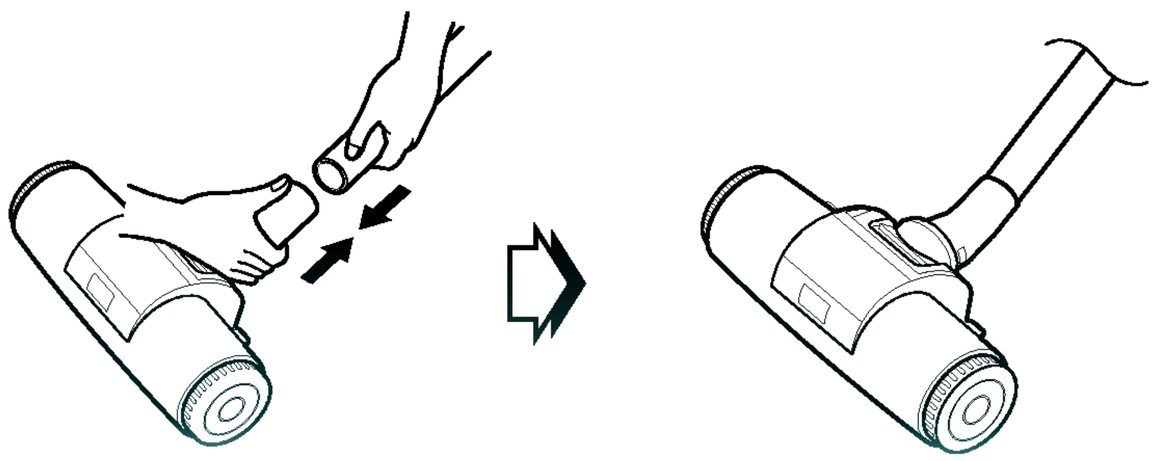

Set the suction power control switch to MAX POWER before vacuuming.
Depending on the type of bedding, handling may be awkward or it may cause a lot of noise.
If this is the case, adjust the sunction power control switch to a lower setting.

If the punch bar does not move, lift the nozzle slightly off the surface.
If it does not move, even after doing this, check if the suction power is too low or if the nozzle base is clogged with a foreign object.

This Sani Punch nozzle is for effective cleaning of beds and blankets to remove mites and dust.

Effective cleaning

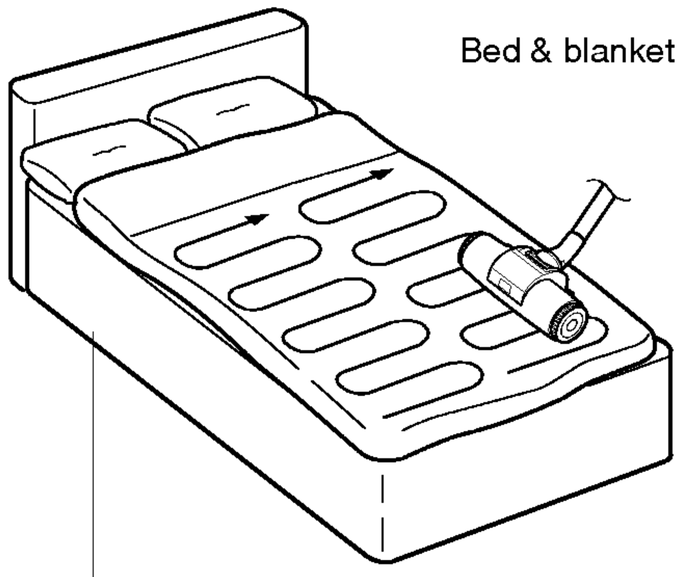

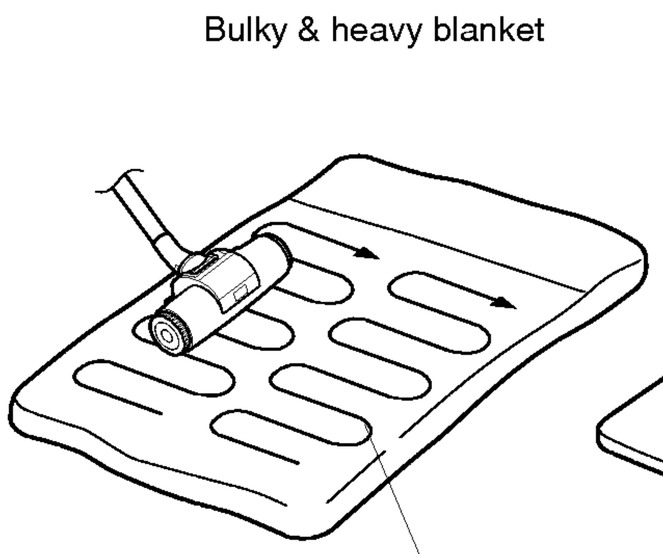

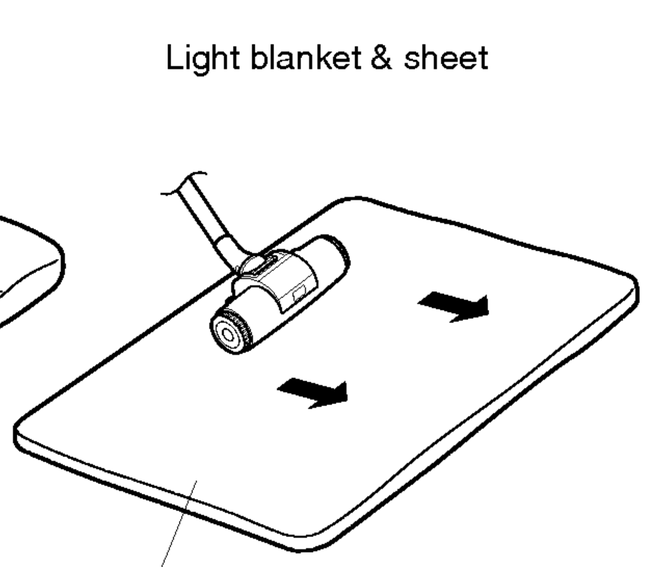

Lay out the blanket
and vacuum it on the bed

It is easier to clean a light blanket or sheet
by pushing the nozzle in the direction of the arrow.
To increase cleaning efficiency for light blankets,
lay on top of a bulky blanket and then clean.

User's guide for sani punch vacuum nozzle Cleaning Vacuum Nozzle for Bedding

For simple cleaning of the vacuum nozzle, detach the Sani Punch nozzle from the telescopic tube and attach the crevice tool to vacuum dust.

Top

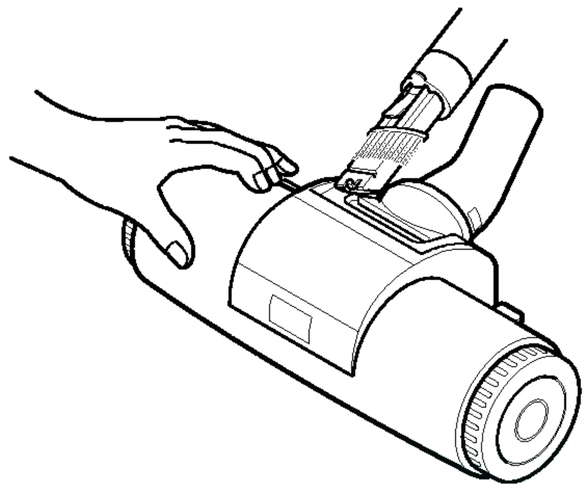

Bottom

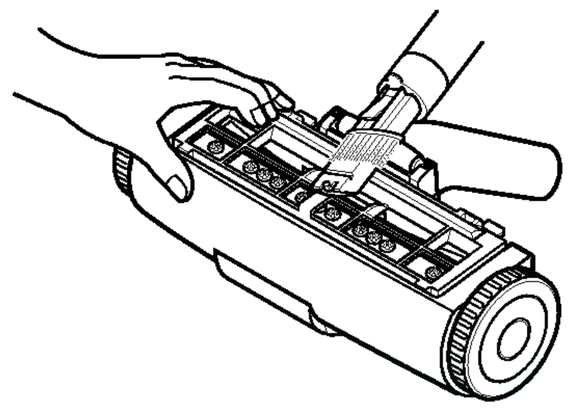

Since the vibrator inside is composed of precision parts, never disassemble the body.
Be careful not to let foreign objects clog the air sunction part on top of the vacuum nozzle.
Since removal of the punch bar may cause performance problems, do not warp or remove it.
Attach the bottom plate properly before using. Without this bottom plate, it may not function.

Since this vacuum nozzle has been made exclusively for cleaning beds, blankets and upholstery,
use it only for these cleaning purposes.
(Using it to clean the floor may result soiling it or a drop in performance, do not use it for such purposes.)

Follow the instruction below for through washing.
(Do not soak the entire body of the vacuum nozzle in water, it may cause the vibrator to malfunction)

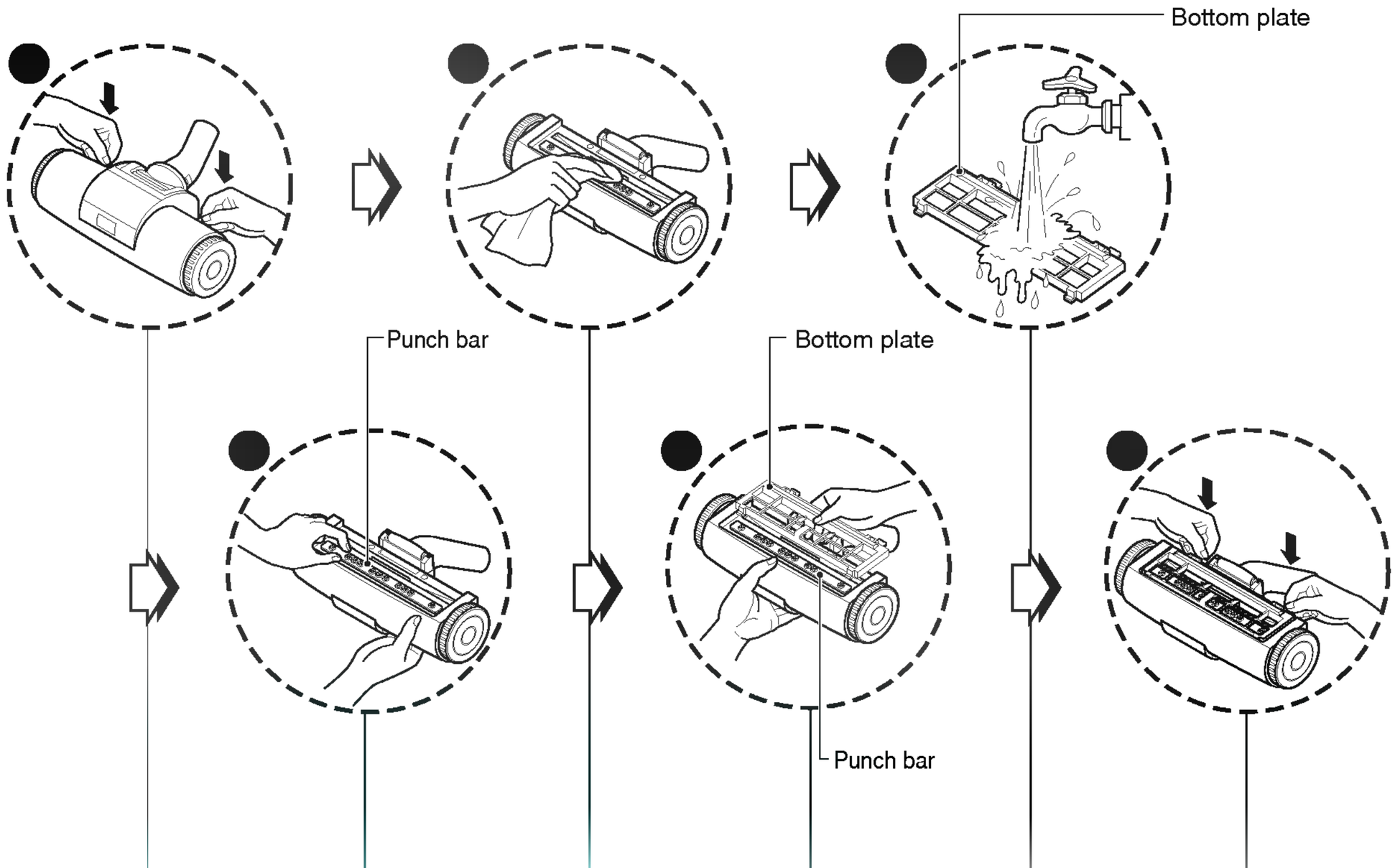

- Press the button on the rear side of the vacuum nozzle to separate the bottom plate.
- Wipe all the soiled parts of the vacuum nozzle body with a cloth.
- Wash the removed bottom plate with water and dry it.
- Straighten the punch bar on the lower section.
- Insert the attachment projections on bottom plate to the vacuum nozzle grooves.
- Push down the tabs to secure.

What to do if your appliance does not work

Check that the appliance is correctly plugged in and that the electrical socket is working.

What to do when the suction performance reduces?

- Stop the appliance and unplug it.
- Check that the tubes, flexible hose and cleaning tool.
- Check that the dust chamber is not full. Empty if necessary.
- Check that the light is not on because of motor filter's blockage.
- Check that the exhaust filter is not blocked.
  Clean the filter.

⚠ WARNING!

Should it become necessary to replace the moulded on plug then the detective plug should be destroyed to avoid any possible shock hazard that could occur should such a plug be inserted into a 13 amp socket elsewhere in the house.

Note

Note

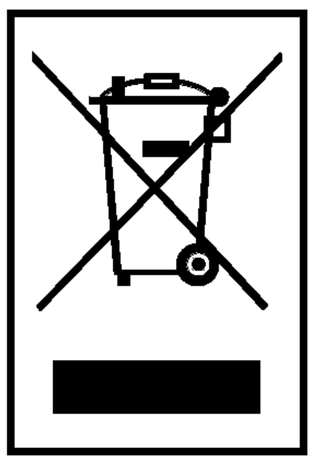

Disposal of your old appliance

1. When this crossed-out wheeled bin symbol is attached to a product it means the product is covered by the European Directive 2002/96/EC.
2. All electrical and electronic products should be disposed of separately from the municipal waste stream via designated collection facilities appointed by the government or the local authorities.
3. The correct disposal of your old appliance will help prevent potential negative consequences for the environment and human health.
4. For more detailed information about disposal of your old appliance, please contact your city office, waste disposal service or the shop where you purchased the product.

LG Electronics Inc.

P/No.: 3828FI3833G