3828JP8026B

LG

REFRIGERATOR-FREEZER
OWNER'S MANUAL
MODEL(s) : GN-S462

PLEASE
READ THIS OWNER'S MANUAL THOROUGHLY
BEFORE OPERATING AND KEEP IT HANDY
FOR REFERENCE AT ALL TIMES.

P/No. 3828JP8026B

CONTENTS

INSTALLATION 3

FEATURE CHART 4

OPERATION 5

Starting
Temperature Control
Ice Making
Icebeam Door Cooling
Chilled Compartment
Defrosting
Deodorizer (option)
F. I. R. Lamp (option)

SUGGESTIONS ON FOOD STORAGE 9

CLEANING 10

GENERAL INFORMATION 10

LAMP REPLACEMENT 11

IMPORTANT WARNINGS 11

BEFORE CALLING FOR SERVICE 12

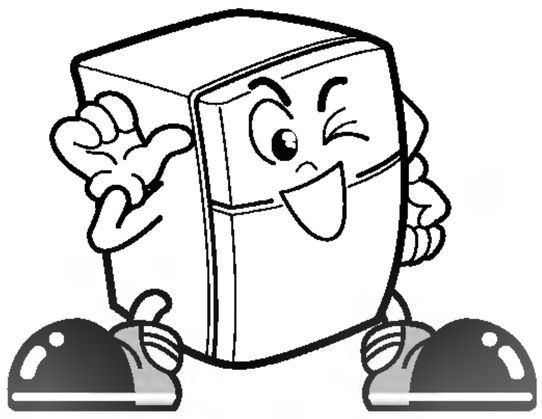

THIS REFRIGERATOR IS MANUFACTURED WITH GREAT CARE, AND UTILIZES THE LATEST IN TECHNOLOGY.
WE ARE CONFIDENT THAT YOU WILL BE FULLY SATISFIED WITH IT'S PERFORMANCE AND RELIABILITY.
BEFORE YOU START YOUR REFRIGERATOR, PLEASE READ THIS BOOKLET CAREFULLY. IT PROVIDES EXACT INSTRUCTIONS FOR INSTALLATION, OPERATION AND MAINTENANCE, AND ALSO SUPPLIES SOME USEFUL HINTS.

INSTALLATION

1. Select a good location.
   Place your refrigerator where it is easy to use.
2. Avoid placing the unit near heat sources, direct sunlight or moisture.
3. There must be proper air circulation around your refrigerator to keep it operating efficiently.
   If your refrigerator is placed in a recessed area in the wall, allow at least 10 inches or greater clearance above the refrigerator and 2 inches or more from the wall.
   The refrigerator should be elevated 1 inch from the floor, especially if it is carpeted.
4. To avoid vibrations, the unit must be level.
   If required, adjust the leveling screws to compensate for unevenness of the floor.
   The front should be slightly higher than the rear to aid in door closing.
   Leveling screws can be turned easily by tipping the cabinet slightly.
   Turn the leveling screws clockwise( ) to raise the unit, counterclockwise( ) to lower it.
5. Install this appliance between 10 ℃ and 43 ℃.
   If the temperature around the appliance is too low or high, cooling ability may lessen.

NEXT

1. Clean your refrigerator thoroughly and wipe off all dust accumulated during shipping.
2. Install accessories such as ice cube box, etc., in their proper places.They are packed together to prevent possible damage during shipment.
3. You have a model with bar-type handle, assemble the handle according to instruction card.
4. Connect the power supply cord (or plug) to the outlet. Don't double up with other appliances on the same outlet.
5. Prior to storing food, leave your refrigerator on for 2 or 3 hours.
   Check the flow of cold air in the freezer compartment to ensure proper cooling.
   Your refrigerator is now ready for use.

FEATURE CHART

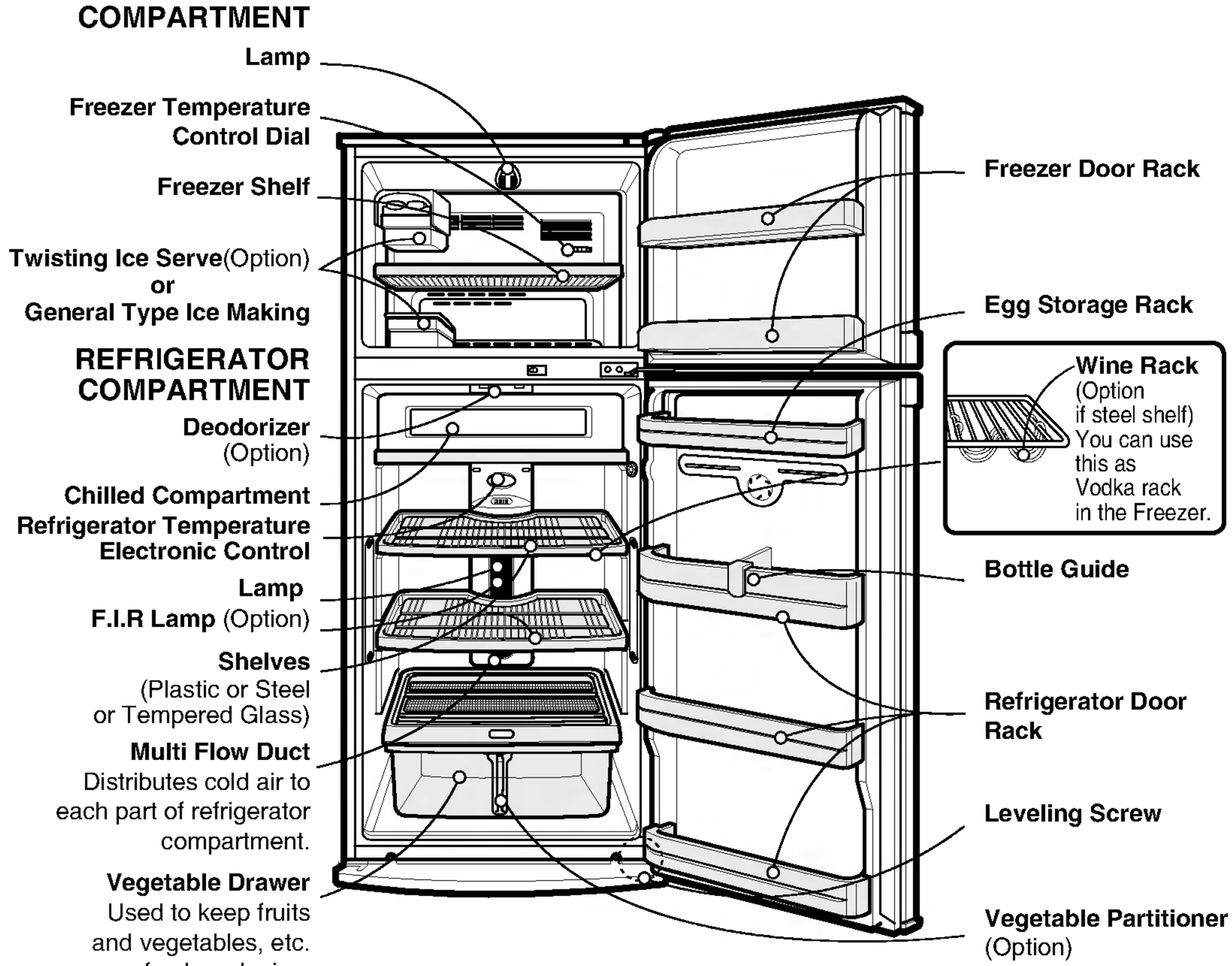

- If you find out some parts which are not in your unit, the parts are applied to other models.

OPERATION

STARTING

When your refrigerator is first installed, allow it 2-3 hours to stabilize at normal operating temperatures prior to filling it with fresh or frozen foods.

If operation is interrupted, allow 5 minutes delay before restarting.

TEMPERATURE CONTROL

❒ REFRIGERATOR

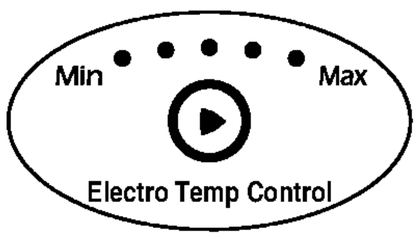

- Your refrigerator has two controls that let you regulate the temperature in the freezer and refrigerator compartments.

- The default setting of the temperature control button for the refrigerator compartment is **NORMAL**.
  You can set the refrigerator temperature using the **Electro Temp Control**.
  Whenever pressing the button, the **LED** emit light.
  The temperature of the compartment goes down as the **LED** luminesce from **MIN** to **MAX**.
  You can select the desired set point in five (5) steps between minimum and maximum.

❒ FREEZER

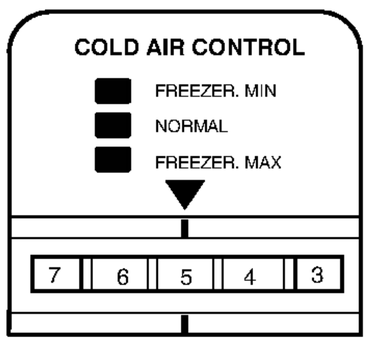

- **COLD AIR CONTROL** - 1, 2, 3, 4, 5, 6, 7, 8, 9
  Setting at "9", the freezer compartment becomes colder.
  But the refrigerator compartment becomes warmer because less cold air flows into the refrigerator compartment.

- **In cold weather** the unit operates less and the freezer compartment has a tendency to warm up.
  For colder freezer, turn the COLD AIR CONTROL to "7"~"9".

- **If you take a lot of foods in the freezer or open its door frequently,** its temperature is apt to be somewhat higher. In this case, set the COLD AIR CONTROL dial between 7 and 9 to cool it. Return the COLD AIR CONTROL dial to the original position to cut down the consumption of energy.

- **In hot weather or to put much foods in the refrigerator compartment,** the refrigerator compartment has a tendency to warm up.
  For colder refrigerator, turn the COLD AIR CONTROL to "2"~"4" to direct more cold air into the refrigerator compartment, and the Electro Temp Control to MAX.
  Setting at "7"~"9" of the COLD AIR CONTROL, the refrigerator compartment will not be cold enough.

OPERATION

ICE MAKING

Kindly, Find your appliance is using General type or Twisting ice serve type.

General Type

- To make ice cubes, fill the ice tray with water and place it on the Ice cube box. Then insert the ice cube box in the freezer compartment.

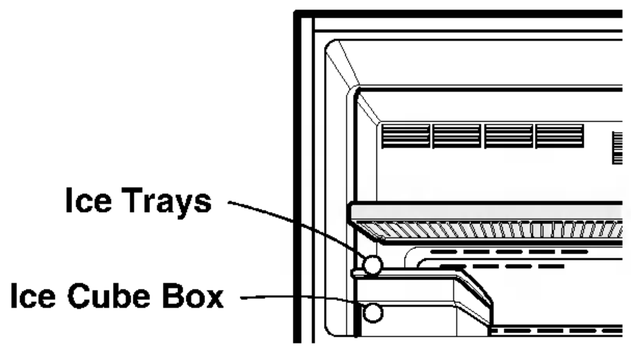

- To remove ice cubes, hold the tray at its ends and twist gently.

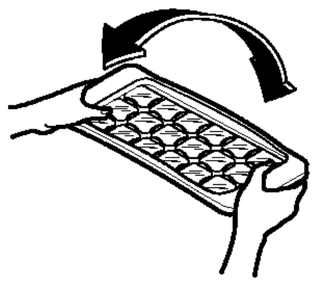

Twisting Ice Serve Type

- To make ice cubes, fill the ice tray with water and insert in its position.

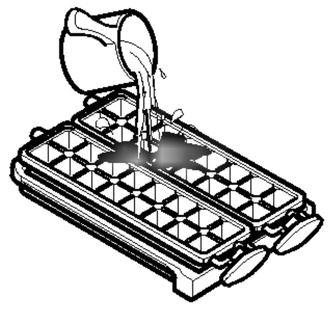

- To remove ice cubes, hold the knob of the tray and turn gently. Then, ice cubes drop in the ice cube box.

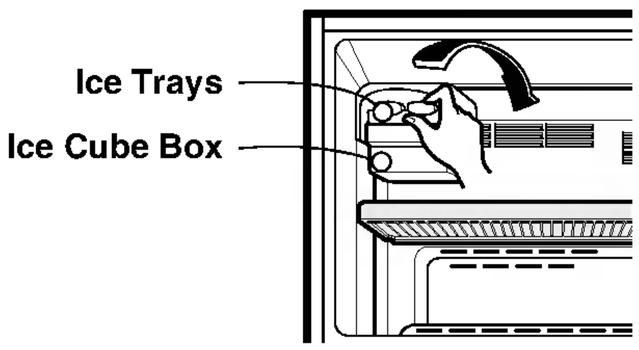

- You can remove Twisting Ice Serve to use freezer compartment larger.
- You should remove Ice Trays and Ice Cube Box first then pull the frame out right side.

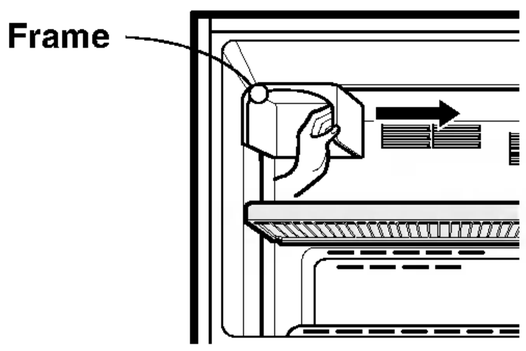

OPERATION

ICEBEAM DOOR COOLING

- There are cool air vents on the four sides to provide cool air all over the space.
- Refrigerator provides cool air all over the space and the cooling fan makes cooling effect better when you newly put food. As a result, the cooling time becomes short.
- If water of foreign substances enter the cool air vent while cleaning, efficiency will be lowered. In addition, if gasket is damaged, efficiency may be lowered owing to the escape of cool air.

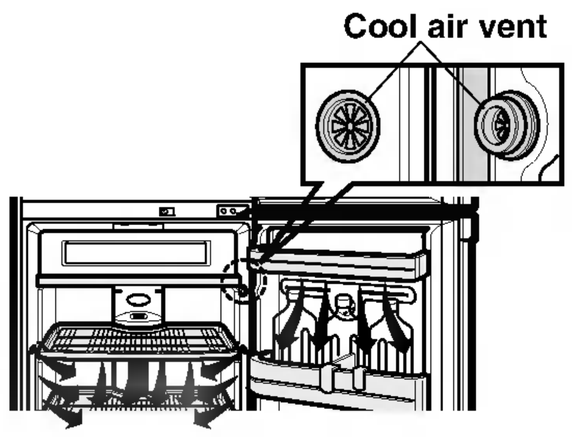

CHILLED COMPARTMENT

When the door is opened, the warmer air doesn't influence in the fresh meat. So you can keep food fresher in it.

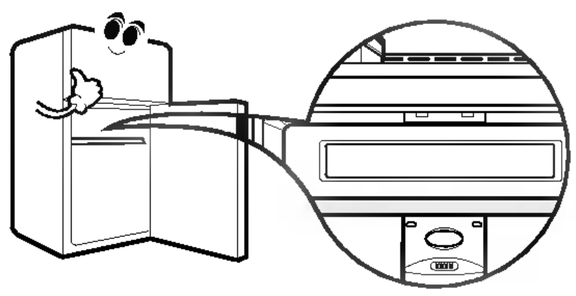

DEFROSTING

- Defrosting takes place automatically.
- The defrosted water flows down to the evaporating tray which is located in the lower back side of the refrigerator and is evaporated automatically.

DEODORIZER (OPTIONAL)

- By using a catalyst, deodorizing performance is guaranteed.
- Unpleasant odor of food in fresh food compartment is deodorized with no harm to you and the food.

How to use

- As the catalyst is located in cooling air outlet for circulating air in fresh food compartment, there is no need for any handling.
- Do not prick the cooling air outlet with a sharp tip because the deodorizing catalyst may be damaged.
- When storing food with a strong odor, wrap it or store it in a container with a lid because odor may be passed on to other foods.

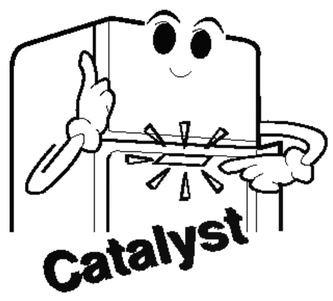

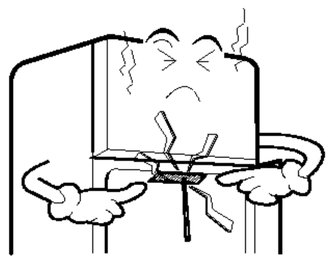

- To remove the deodorizer, take down while pulling it forward after inserting ⊖ type driver into the inside hole as shown in the figure at right.

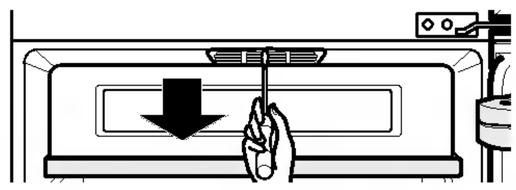

OPERATIONS

F.I.R LAMP (OPTION)

Feature

- Far Infrared Rays emitted from Far Infrared Ray Lamp restrains the dryness of the foods and keeps its original form without transforming.
- By increasing the nucleic acid, Far Infrared Rays also keeps the aroma and the smell of the food for a long time.

More effective food storage.

- It is useful to store the food without seasoning such as salt or sugar, and the food needed to keep as low temperature with the raw food uncooked heating or no disinfecting.
  - (Sliced) : Raw Fish, Meat, Poultry and so on
- It is useful to keep the original taste of the food by F.I.R's the restraining excessive fermentation and overripe of the foods.
  - Vegetable with spices, Yogurt, and so on
- It is useful to store the unsuited foods in the Freezer among the cooked foods or that go bad easily.
  - Boiled Egg, Bamboo Shoots, Vegetable for seasoning, and so on

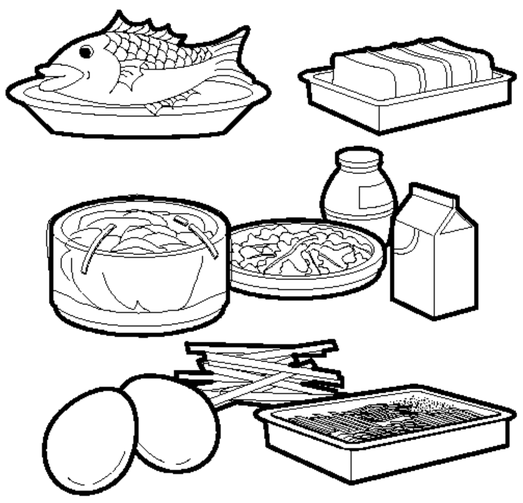

Operating

- When the refrigerator begins to operate, F.I.R Lamp turns on. During the refrigerator's operating, the on and off of the F. I. R Lamp is automatically controlled by the refrigerator inner temperature.
  Therefore it is not necessary to handle F.I.R Lamp.
- F.I.R Lamp is coated with special materials for the vest results of F.I.R Lamp's effect decreases.
- If F.I.R Lamp is veiled or covered, the F.I.R Lamp's effect decreases.
- If you store the foods wrapped in the vinyl or wrapper, not in the vessel with lid, the foods will get more effective F.I.R results.
- If you want to check the F.I.R Lamp operation, don't touch F.I.R Lamp because you may burn your fingers with the high temperature of its surface.

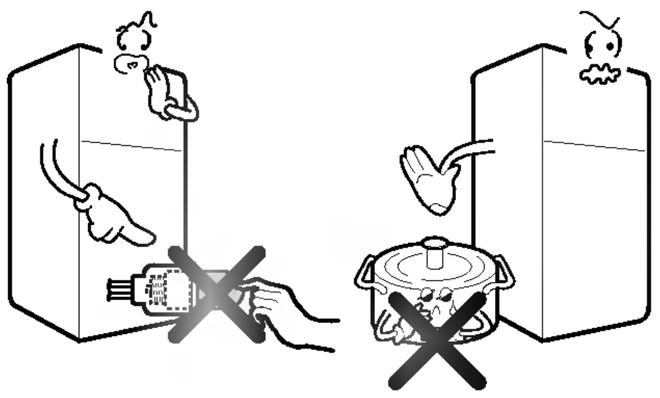



- During F.I.R Lamp operation, don't touch F.I.R Lamp because you may burn your fingers with the high temperature of its surface.

SUGGESTIONS ON FOOD STORAGE

STORING FOOD

- Store fresh food in the refrigerator compartment. How food is frozen and defrosted is an important factor in maintaining freshness and flavor.
- Do not store food which goes bad easily at low temperatures, such as bananas, pineapples, and melons.
- Allow hot food to cool prior to storing. Placing hot food in the refrigerator could spoil other food, and lead to high electric bills!
- When storing, wrap food in vinyl, or place in a covered container. This prevents moisture from evaporating, and helps food to keep its taste and nutritional valve.
- Do not block air vents with food. Smooth circulation of chilled air keeps refrigerator temperatures even.
- Do not open the door frequently. Opening the door lets warm air enter the refrigerator, causing temperatures to rise.
- To adjust the temperature control easily, do not store food near the temperature control dial.

FREEZER COMPARTMENT

- Do not store bottles in the freezer compartment - they may break when frozen.
- Do not refreeze food that has been defrosted. This causes loss of taste and nutritional valve.
- When storing frozen food like ice cream for a long period, place it on the freezer shelf, not in the door rack.

REFRIGERATOR COMPARTMENT

- Avoid placing moist food on deep interior refrigerator shelves, it could freeze upon direct contact with chilled air. To avoid this it is better to store food in the covered container.
- Always clean food prior to refrigeration. Vegetables and fruits should be washed and wiped, and packed food should be wiped clean, to prevent adjacent food from spoiling.
- When storing eggs in their storage rack, ensure that they are fresh, and always store them in a up-right position, which keeps them fresh longer.

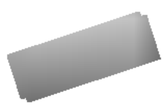

- If you keep the refrigerator in a hot, and humid place, frequently open its door or put a lot of vegetables in it, dew may form in it, which has no effect on its performance. Remove the dew with dust cloth free from care.

CLEANING

It is important that you refrigerator be kept clean to prevent undesirable odors. Spilled food should be wipe up immediately, since it may acidify and stain plastic surfaces if allowed to settle.

Never use metallic scouring pads, brushes, coarse abrasive cleaners or strong alkaline solutions on any surface.

Before you clean, however, remember that damp objects will stick or adhere to extremely cold surfaces. Do not touch frozen surfaces with wet or damp hands.

EXTERIOR - Use a lukewarm solution of mild soap or dish washable solution to clean the durable finish of your refrigerator. Wipe with a clean, damp cloth and then dry.

INTERIOR - Regular cleaning of the interior and interior parts is recommended. Use a lukewarm solution of mild soap or dish washable solution to clean the durable finish of your refrigerator. Wipe with a clean, damp cloth and then dry.

INTERIOR PARTS - Wash compartment shelves, door racks, storage trays and magnetic door seals etc. Use a lukewarm solution of mild soap or dish washable solution to clean the durable finish of your refrigerator. Wipe with a clean, damp cloth and then dry.

WARNING

Always remove power cord from the wall outlet prior to cleaning in the vicinity of electrical parts(lamps, switches, controls, etc.). Wipe up excess moisture with a sponge or cloth to prevent water or liquid from getting into any electrical part and causing electric shock. Do not use flammable or toxic cleaning liquids.

¥ Caution for Cleaning
Not in use : Surface active agent, Car wax, Anticorrosive, All sorts of oil, Gasoline, Acids, Wax.

¥ Usable Detergent
Vegetable dish washable solution, Soapy water

¥ When careless using, it can occur a color change.

GENERAL INFORMATION

VACATION TIME

During average length vacations, you will probably find it best to leave the refrigerator in operation. Place freezable items in freezer for longer life. When you plan to be away for an extended period, remove all food, disconnect the power cord, clean the interior thoroughly, and leave each door OPEN to prevent odor formation.

POWER FAILURE

Most power failures are corrected in an hour or two and will not affect your refrigerator temperatures. However, you should minimize the number of door openings while the power is off. During power failures of longer duration, place a block of dry ice on top of your frozen packages.

IF YOU MOVE

Remove or securely fasten down all loose items inside the refrigerator.
To avoid damaging the leveling screws, turn them all the way into the base.

ANTI-CONDENSATION PIPE

The outside wall of the refrigerator cabinet may sometimes get warm, especially just after installation. Don't be alarmed. This is due to the anti-condensation pipe, which pumps hot refrigerant to prevent "sweating" on the outer cabinet wall.

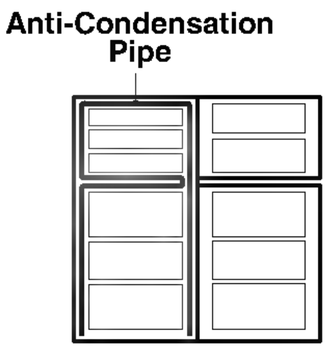

LAMP REPLACEMENT

FREEZER LAMP

1. Unplug the power cord from the outlet.
2. Remove the room lamp lid by taking down while pulling its back projection.
3. Remove the lamp by turning it counterclockwise and replace new one.
4. Assemble in reverse order of disassembly. Replacement bulb must be the same specification as original.

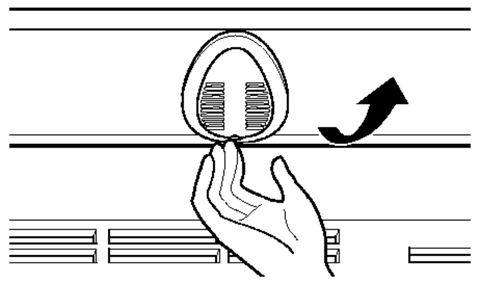

REFRIGERATOR LAMP

1. Unplug the power cord from the outlet.
2. Remove refrigerator shelves.
3. To remove the lamp cover, insert driver at under hole of the lamp cover and pull it out forwards.
4. Turn the lamp counterclockwise.
5. Assemble in reverse order of disassembly. Replacement bulb must be the same specification as original.

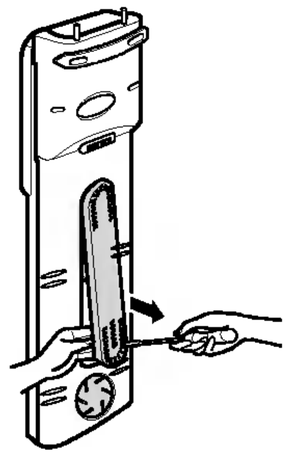

IMPORTANT WARNINGS

DO NOT USE AN EXTENSION CORD

If possible, connect the refrigerator to its own individual electrical outlet to prevent it and other appliances or household lights from causing an overload that could cause a power outage.

ACCESSIBILITY OF SUPPLY PLUG

The refrigerator-freezer should be so positioned that the supply plug is accessible for quick disconnection when accident happens.

SUPPLY CORD REPLACEMENT

If the supply cord is damaged, it must be replaced by the manufacturer or its service agent or a similarly qualified person in order to avoid a hazard.

ABOUT GROUNDING (EARTHING)

In the event of an electric short circuit, grounding (earthing) reduces the risk of electric shock by providing an escape wire for the electric current.

In order to prevent possible electric shock, this appliance must be grounded.

Improper use of the grounding plug can result in an electric shock. Consult a qualified electrician or service person if the grounding instructions are not completely understood, or if you have doubts on whether the appliance is properly grounded.

VERY DANGEROUS ATTRACTION

An empty refrigerator can be a dangerous attraction to children. Remove gaskets, latches, lids or the entire door from your unused appliance,or take some other action to make it harmless.

This appliance must be grounded (earthed).

DON'T WAIT! DO IT NOW!

NEVER STORE EXPLOSIVES AND CHEMICALS

BEFORE CALLING FOR SERVICE

SERVICE CALLS CAN OFTEN BE AVOIDED!
IF YOU FEEL YOUR REFRIGERATOR IS NOT OPERATING PROPERLY, CHECK THESE POSSIBLE CAUSES FIRST :

PROBLEM	POSSIBLE CAUSES
REFRIGERATOR DOES NOT OPERATE	• Has a house fuse blown or circuit breaker tripped? • Has the power cord plug been removed or loosened from the electrical wall outlet?
REFRIGERATOR OR FREEZER COMPARTMENT TEMPERATURE TOO WARM	• Temperature control not set on proper position. • Appliance is placed close to wall or heat source. • Warm weather-frequent door openings. • Door is not closed entirely. • Door left open for a long time. • Large amount of foods are kept in the refrigerator.
ABNORMAL NOISE(S)	• Refrigerator is installed in a weak or uneven place or leveling screw needs adjusting. • Unnecessary objects placed in the back side of the refrigerator.
REFRIGERATOR HAS ODOR	• Foods with strong odors should be tightly covered or wrapped. • Interior needs cleaning.
DEW FORMS ON THE CABINET SURFACE	• Not unusual during periods of high humidity. • Door may have been left ajar.

LG Electronics Inc.