LG

MICROWAVE/GRILL/CONVECTION OVEN

OWNER'S MANUAL

PLEASE READ THIS OWNER'S MANUAL THOROUGHLY BEFORE OPERATING.

MC-9243JLR

P/No: 3828W5A4664

Precautions

Precautions to avoid possible exposure to excessive microwave energy.

You cannot operate your oven with the door open due to the safety interlocks built into the door mechanism. These safety interlocks automatically switch off any cooking activity when the door is opened; which in the case of a microwave oven could result in harmful exposure to microwave energy.
It is important not to tamper with the safety interlocks.

Do not place any object between the oven front face and the door or allow food or cleaner residue to accumulate on sealing surfaces.

Do not operate your oven if it is damaged. It is particularly important that the oven door closes properly and that there is no damage to the: (1) door(bent), (2) hinges and latches (broken or loosened), (3) door seals and sealing surfaces.

Your oven should not be adjusted or repaired by anyone except qualified service personnel.

Warning

When heating liquids, e.g. soups, sauces and beverages in your microwave oven, overheating the liquid beyond boiling point can occur without evidence of bubbling. This could result in a sudden boil over of the hot liquid. To prevent this possibility the following steps should be taken:

1 Avoid using straight sided containers with narrow necks.

2 Do not overheat.

3 Stir the liquid before placing the container in the oven and again halfway through the heating time.

4 After heating, allow to stand in the oven for a short time, stir or shake them again carefully and check the temperature of them before consumption to avoid burns (especially, contents of feeding bottles and baby food jars).
Be careful when handling the container.

Warning

Always allow food to stand after being cooked by microwaves and check the temperature of them before consumption. Especially contents of feeding bottles and baby food jars.

Contents

How the Microwave Oven Works

Microwaves are a form of energy similar to radio and television waves and ordinary daylight. Normally, microwaves spread outwards as they travel through the atmosphere and disappear without effect. Microwave ovens, however, have a magnetron which is designed to make use of the energy in microwaves. Electricity, supplied to the magnetron tube, is used to created microwave energy.

These microwaves enter the cooking area through openings inside the oven. A turntable or tray is located at the bottom of the oven. Microwaves cannot pass through metal walls of the oven, but they can penetrate such materials as glass, porcelain and paper, the materials out of which microwave-safe cooking dishes are constructed.

Microwaves do not heat cookware, though cooking vessels will eventually get hot from the heat generated by the food.

A very safe appliance

Your microwave oven is one of the safest of all home appliances. When the door is opened, the oven automatically stops producing microwaves. Microwave energy is converted completely to heat when it enters food, leaving no "left over" energy to harm you when you eat your food.

aPrecautions — 2
Contents — 3
Unpacking & Installing — 4 ~ 5
Setting the Clock — 6
Setting the Scroll Speed — 7
Child Lock — 8
Micro Power Cooking — 9
Micro Power Level — 10
Two Stage Cooking — 11
Quick Start — 12
Grill Cooking — 13
Convection Cooking — 14 ~ 15
Combination Cooking — 16 ~ 17
Auto Weight Defrost — 18 ~ 19
Quick Defrost — 20 ~ 21
Rotisserie Cook — 22 ~ 24
Rotisserie Assembly — 25
Rotisserie Installation & Cooking — 26 ~ 27
Auto Reheat — 28 ~ 29
Auto Cook — 30 ~ 33
More or Less Cooking — 34
Important Safety Instructions — 35 ~ 36
Microwave - safe Utensils — 37
Food characteristics & Microwave cooking — 38 ~ 39
Questions & Answers — 40
Plug Wiring Information/Technical Specifications — 41

Unpacking & Installing

By following the basic steps on these two pages you will be able to quickly check that your oven is operating correctly. Please pay particular attention to the guidance on where to install your oven. When unpacking your oven make sure you remove all accessories and packing. Check to make sure that your oven has not been damaged during delivery.

1 Unpack your oven and place it on a flat level surface.

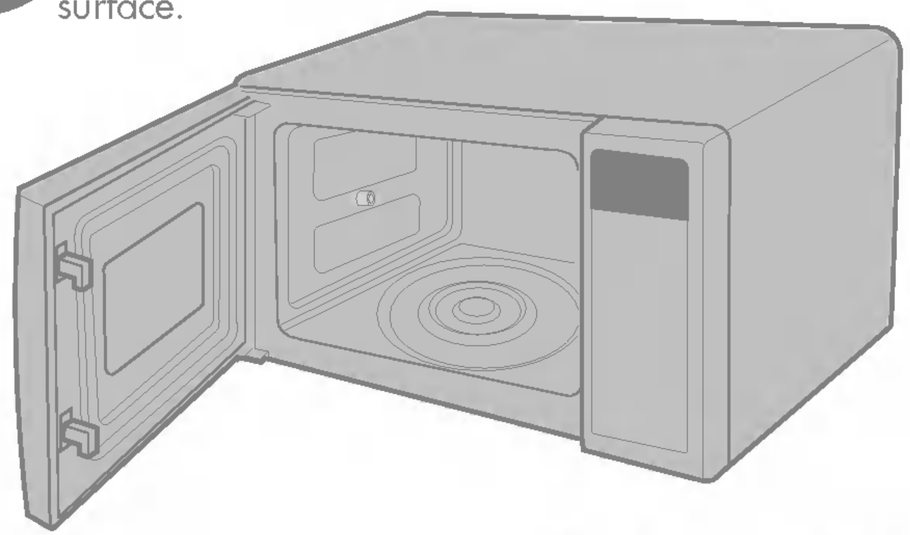

HIGH RACK

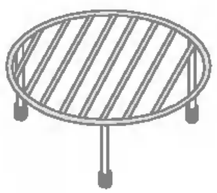

LOW RACK

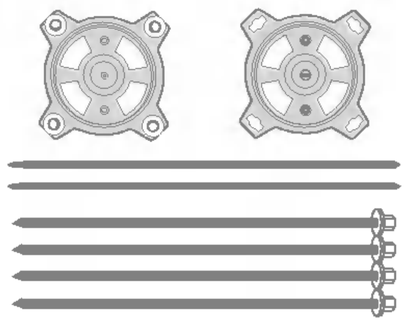

ROTISSERIE

GLASS TRAY

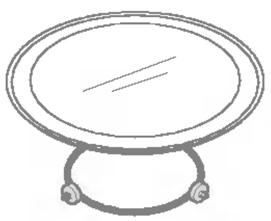

ROTATING RING

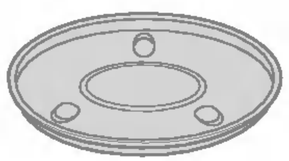

METAL TRAY

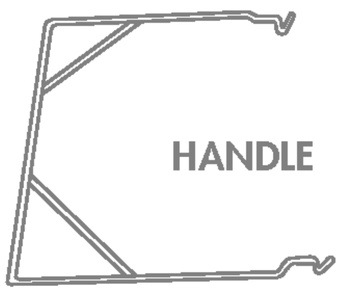

HANDLE

2 Place the oven in the level location of your choice with more than 85cm height but make sure there is at least 30cm of space on the top and 10cm at the rear for proper ventilation. The front of the oven should be at least 8cm from the edge of the surface to prevent tipping.
An exhaust outlet is located on top or side of the oven. Blocking the outlet can damage the oven.

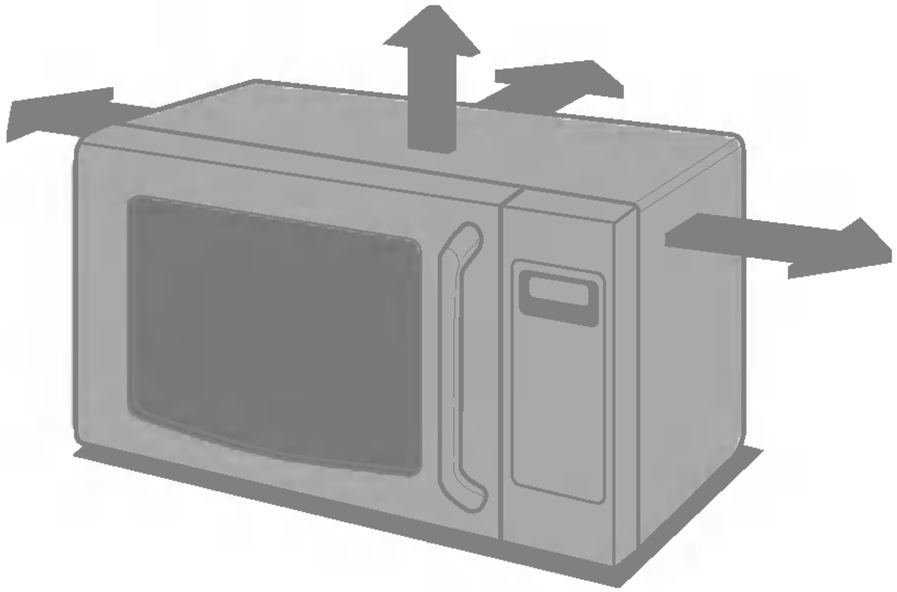

THIS OVEN SHOULD NOT BE USED FOR COMMERCIAL CATERING PURPOSES

3 Plug your oven into a standard household socket. Make sure your oven is the only appliance connected to the socket. **If your oven does not operate properly, unplug it from the electrical socket and then plug it back in.**

4 Open your oven door by pulling the **DOOR HANDLE**. Place the **ROTATING RING** inside the oven and place the **GLASS TRAY** on top.

5 Fill a **microwave safe container** with 300 ml (1/2 pint) of water. Place on the **GLASS TRAY** and close the oven door. If you have any doubts about what type of container to use please refer to page 37.

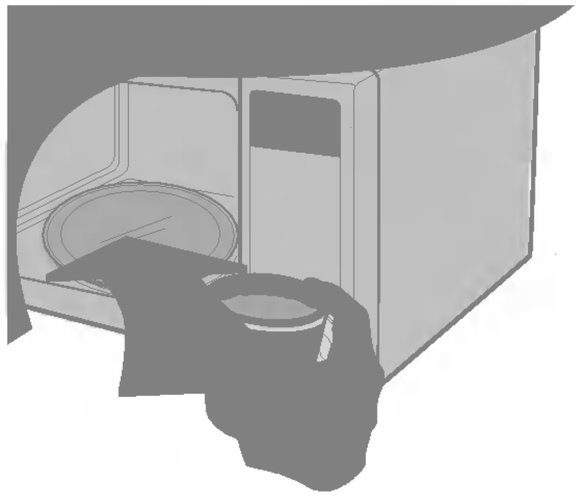

6 Press the **START** button six times to set 30 seconds of cooking time. You will hear a BEEP each time you press the button. Your oven will start before you have finished the sixth press; don't worry this is normal.

7 The **DISPLAY** will count down from 30 seconds. When it reaches 0 it will sound BEEPS. Open the oven door and test the temperature of the water. If your oven is operating the water should be warm. **Be careful when removing the container it may be hot.**

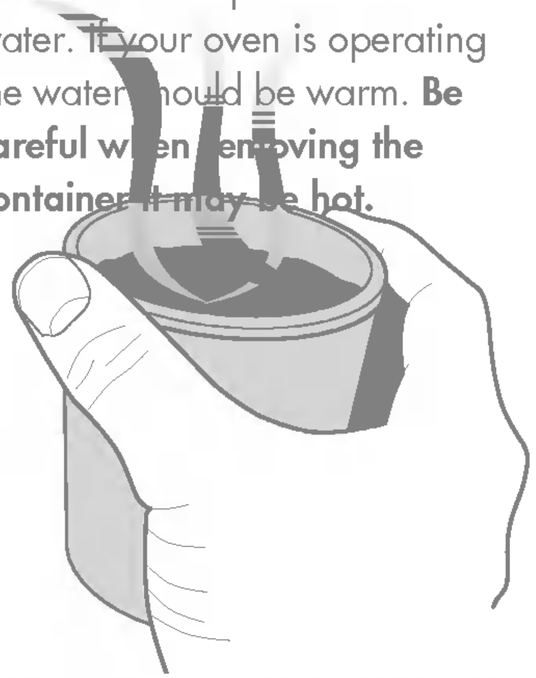

YOUR OVEN IS NOW INSTALLED

8 The contents of feeding bottles and baby food jars shall be stirred or shaken and the temperature checked before consumption, in order to avoid burns.

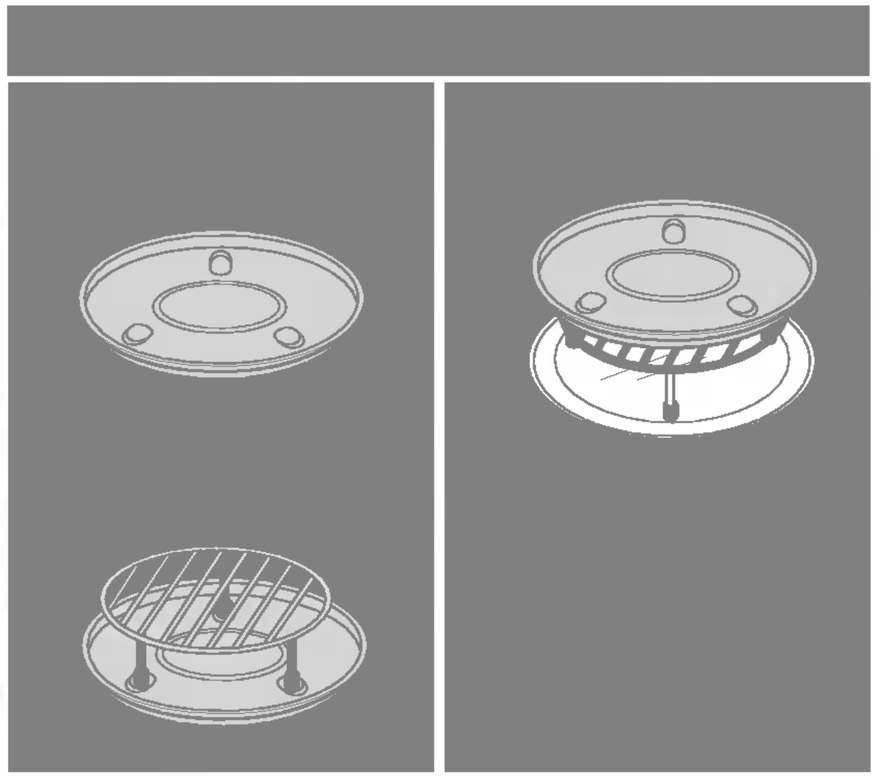

Setting the Clock

You can set either12 hour clock or 24 hour clock.
In the following example I will show you how to set the time for 14:35 when using the 24 clock.
Make sure that you have removed all packaging from your oven.

When your oven is plugged in for the first time or when power resumes after a power cut, a '0' will be shown in the display; you will have to reset the clock.

If the clock (or display) shows any strange looking symbols, unplug your oven from the electrical socket and plug it back in and reset the clock.

During clock setting the colon will flash. After setting, the colon will stop flashing.

1

Make sure you have correctly installed your oven as described earlier in this book.

Press **STOP/CLEAR.**

2

Press **SETTING.**
Press **MORE** or **LESS** once to select clock setting.

3

Press **SETTING** and then press **MORE** or **LESS** once to select the 24H.
(If you want to use a 12 hour clock, Press **MORE** or **LESS** once more.
If you want to change different option after setting clock,
you have to unplug and plug it back in.)
Press **SETTING** for hour confirmation.

4

Press **10 MIN** fourteen times.
Press **1 MIN** five times.
Press **10 SEC** five times.

5

Press **SETTING** to set the time.

The clock starts counting.

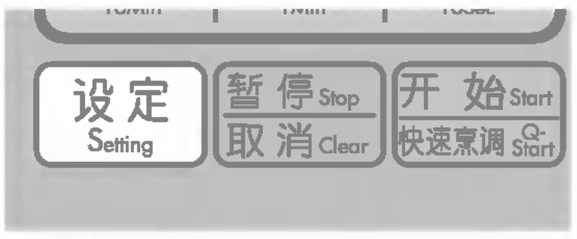

Setting the Scroll Speed

You can set scroll speed.
In the following example I will show you how to set Slow scroll speed.
Make sure that you have removed all packaging from your oven.

When your oven is plugged in for the first time or when power resumes after a power cut, a ' : ' will be shown in the display; you will have to reset the scroll speed.

If display shows any strange looking symbols, unplug your oven from the electrical socket and plug it back in and reset the scroll speed.

1

Make sure that you have correctly installed your oven as described earlier in the book.

Press **STOP/CLEAR.**

2

Press **SETTING** once.

Press **MORE/LESS** twice to select the scroll speed setting.

Press **SETTING** to confirm.

3

Press **MORE/LESS** until display shows "SLOW".

Press **SETTING**

Child
Lock

Your oven has a safety feature that prevents accidental running of the oven. Once the child lock is set, you will be unable to use any functions and no cooking can take place.
However your child can still open the oven door.

P[redacted]

2

Press an[redacted]STOP/CLEAR until "**CHILD LOCKED**" appears on the display and [redacted] sounds.
The **CHI**[redacted]s now set.

3

To canc[redacted] **LOCK** press and hold **STOP/CLEAR** until "**CHILD LO**[redacted]" disappears.
You w[redacted]P when it's released.

Micro Power Cooking

In the following example I will show you how to cook some food on 720W (80%) power for 5 minutes and 30 seconds.

Your oven has five microwave Power settings. High power is automatically selected but repeated presses of the **MICRO** key will select a different power level.

POWER	%	Power Output
HIGH MAX	100%	900W
MEDIUM HIGH	80%	720W
MEDIUM	60%	540W
DEFROST MEDIUM LOW	40%	360W( )
LOW	20%	180W

Don't Use

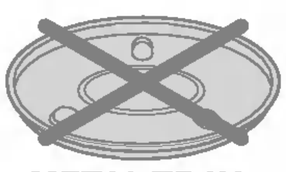

METAL TRAY

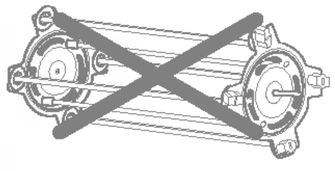

ROTISSERIE

1

Make su[illegible] you have correctly installed your oven as described earlier in this boo[illegible]

Press **STOP/CLEAR.**

2

Press **MI**[illegible]ice to select 720W (80%) power.
"720W" app[illegible] on the display.

3

Press **1** [illegible] times.
Press **10 SEC** [illegible]e times.

Pre[illegible]

Micro Power
Level

Your microwave oven is equipped with 5 power levels to give you maximum flexibility and control over cooking. The table below shows the examples of food and their recommended cooking power levels for use with this microwave oven.

HIGH	900W	* Boil Water * Brown minced beef * Cook poultry pieces, fish, vegetables * Cook tender cuts of meat
MEDIUM HIGH	720W	* Reheating(Liquid) * Roast meat and poultry * Cook mushrooms and shellfish * Cook foods containing cheese and eggs
MEDIUM	540W	* Reheating(Mashed potato, Plated meal, Ready meal) * Prepare eggs * Cook custard * Prepare rice, soup
DEFROST/ MEDIUM LOW	360W	* All thawing * Melt butter and chocolate * Cook less tender cuts of meat
LOW	180W	* Soften butter & cheese * Soften ice cream * Raise yeast dough

Two stage Cooking

In the following example I will show you how to cook some food in two stages. The first stage will cook your food for 11 minutes on HIGH; the second will cook for 35 minutes on 360W(40%).

During two stage cooking the oven door can be opened and food checked. Close the oven door and press **START** and the cooking stage will continue.

At the end of stage1, BEEP sounds and stage 2 commences.

Should you wish to clear the programme press **STOP/CLEAR** twice.

Don't Use

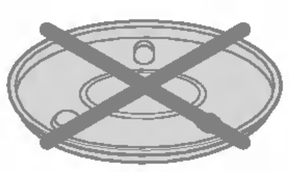

METAL TRAY

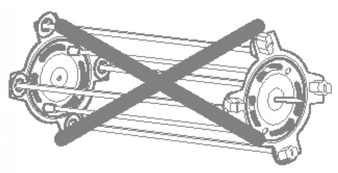

ROTISSERIE

Press **STOP/CLEAR**

2

Set the power and the cooking time **for stage1.**

Press MICROWAVE to select HIGH power.

Press **10 MIN** once.
Press **1 MIN** once.

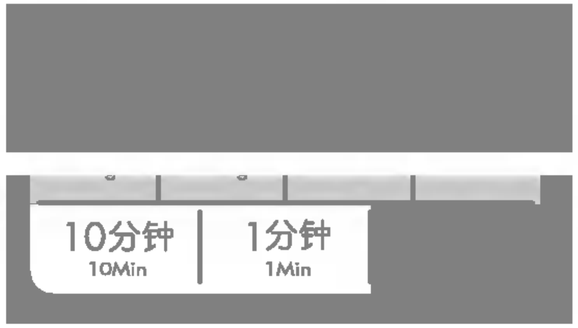

3

Set the power and the cooking time **for stage2.**

Press MICROWAVE four times to select 360W power.

Press **10 MIN** three times.
Press **1 MIN** five times.

Press **START**

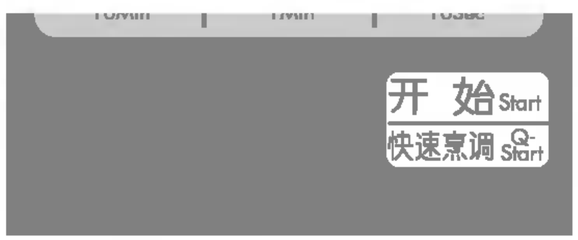

Quick Start

In the following example I will show you how to set 2 minutes of cooking on high power.

The **QUICK START** feature allows you to set 30 seconds intervals of HIGH power cooking with a touch of the **QUICK START** key.

Don't Use

METAL TRAY

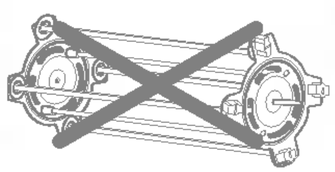

ROTISSERIE

Pr

2

Press **QUICK START** four times to select 2 minutes on HIGH power. Your oven will start before you have finished the fourth press.

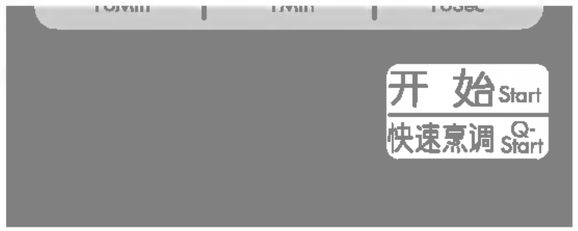

3

During **QUICK START** cooking, you can extend the cooking time up to 99 minutes 99 seconds by repeatedly pressing the **QUICK START** key.

In the following example I will show you how to use the grill to cook some food for 12 minutes and 30 seconds.

This model is fitted with a **QUARTZ GRILL**, so preheating is not needed.

This feature will allow you to brown and crisp food quickly.

The metal tray is placed between a glass tray and a grill rack at the grill mode.

The grill rack(high rack) must be used during grill cooking.

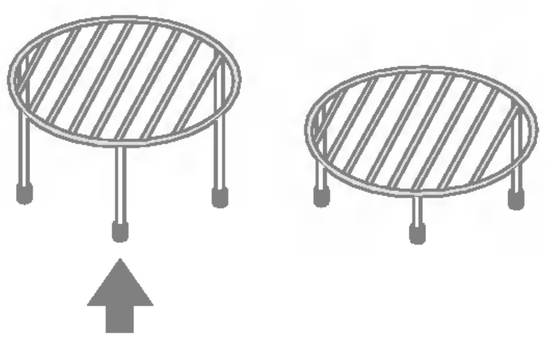

Pre[illegible]

Pre[illegible]

Set the [illegible] time.

3

Press [illegible] ice.
Press **1 MIN** twice.
Press **10 SEC** twice.

Pr[illegible]

Convection Cooking

In the following example I will show you how to preheat the oven first, then cook some food at a temperature of 230 °C .

The convection oven has a temperature range of 40 °C and 100 °C~250 °C (180 °C is automatically available when convection mode is selected).

*** The oven has a ferment function at the oven temperature of 40°C. You may wait until the oven is cool because you cannot use a ferment function if the oven temperature is over 40°C. When you use this function if the oven temperature is over 70°C Error code "E-05" displays.**

Your oven will take a few minutes to reach the selected temperature.

Once it has reached correct temperature, your oven will BEEP to let you know that it has reached the correct temperature. Then place your food in your oven: then tell your oven to start cooking.

1. T

Pr

Pre

3

Press ⊕ fi times to select 230 °C.
The cookin perature can be changed by pressing ⊕ / ⊖ key.

Pre

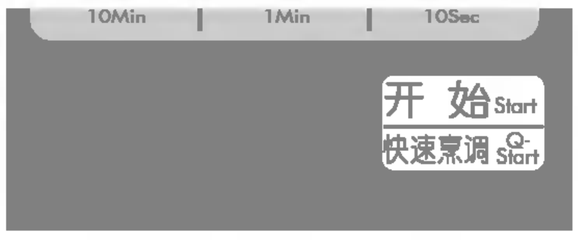

In the following example I will show you how to preheat the oven first, then cook some food at a temperature of 230 °C for 50 minutes.

If you do not set a temperature, your oven will automatically select 180 °C. The cooking temperature can be changed by pressing the ⊕ / ⊖ key.

The convection rack(low rack) must be used during convection cooking.

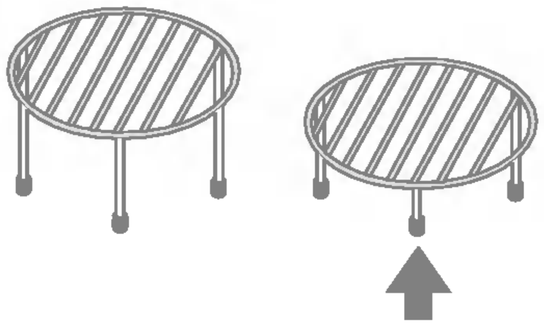

2. T

Pr N

P select 230 °C.

P es.

P

Combination Cooking

In the following example I will show you how to programme your oven with - micro power 360W(40%) and grill for a cooking time of 25 minutes.

Your oven has a combination cooking feature which allows you to cook food with **heater** and **microwave** at the same time or alternately. This generally means it takes less time to cook your food.

You can set three kinds of micro power level(20%, 40% and 60%) in combi mode.

1. GRILL COMBINATION.

Press **STOP/CLEAR.**

Pr[illegible] select Grill combination.

Pr[illegible]s to select 360W power.

Set the cooking time.
Press **10 MIN** two times.
Press **1 MIN** five times.

Press **START**
When [illegible] you can use ⊕ / ⊖ key to increase or decrease cookin[illegible]

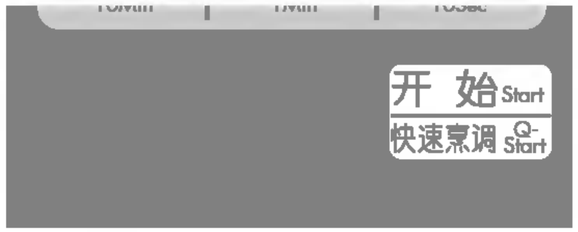

Be careful when removing your food because the container will be hot!

Combination Cooking

In the following example I will show you how to programme your oven with micro power 360W(40%) and at a convection temperature 200 °C for a cooking time of 25 minutes.

Your oven has a combination cooking feature which allows you to cook food with **heater** and **microwave** at the same time or alternately. This generally means it takes less time to cook your food.

2. CONVECTION COMBINATION.

1 Press **STOP/CLEAR.**

2 Press CONVECTION to select Convection combination.

Press MICROWAVE to select micro power level of 360W.

Press ⊕ three times to set convection temperature 200°C.

4 Set the cooking time.
Press 10 MIN two times.
Press 1 MIN five times.

5 Press START.
When cooking, you can use ⊕ / ⊖ key to increase or decrease cooking time.

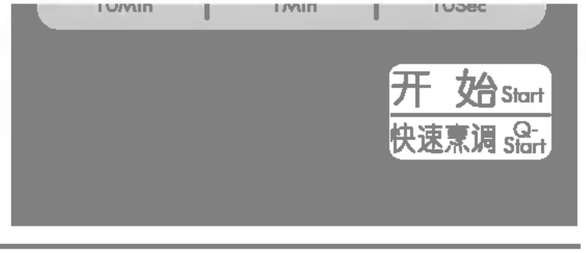

Be careful when removing your food because the container will be hot!

Auto Weight
Defrost

The temperature and density of food varies, I would recommend that the food is checked before cooking commences. Pay particular attention to large joints of meat and chicken, some foods should not be completely thawed before cooking. For example fish cooks so quickly that it is sometimes better to begin cooking while still slightly frozen. The BREAD programme is suitable for defrosting small items such as rolls or a small loaf. These will require a standing time to allow the centre to thaw. In the following example I will show you how to defrost 1.4Kg of frozen poultry.

Your oven has four microwave defrost settings:- **MEAT, POULTRY, FISH** and **BREAD**; each defrost category has different power settings. Repeated presses of the **DEFROST** key will select a different setting.

Category	Press	
	DEFROST 1,2	
MEAT	1	time
POULTRY	2	times
	DEFROST 3,4	
FISH	1	time
BREAD	2	times

Don't Use

METAL TRAY

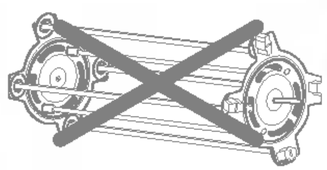

ROTISSERIE

1 Press **STOP/CLEAR.**
Weight the food that you are about to defrost. Be certain to remove any metallic ties or wraps; then place the food in your oven and close the oven door.

2 Press P[illegible]vice to select the **POULTRY** defrosting programme.
"**dEF2**" app[illegible]on the display window.

3 Enter th[illegible]of the frozen food that you are about to defrost.

Press 1.[illegible]eight key one time.
Press **0.1kg** of weight key four times.

4 Pre[illegible]

5 During defrosting your oven will "BEEP", at which point open the oven door, turn food over and separate to ensure even thawing. Remove any portions that have thawed or shield them to help slow down thawing. After checking close the oven door and press **START** to resume defrosting.
Your oven will not stop defrosting (even when the beep sounded) unless the door is opened.

AUTO WEIGHT DEFROST GUIDE

* Food to be defrosted should be in a suitable microwave proof container and place uncovered on the glass turntable.
* If necessary, shield small areas of meat or poultry with flat pieces of aluminum foil. This will prevent thin areas becoming warm during defrosting. Ensure the foil does not touch the oven walls.
* Separate items like minced meat, chops and bacon as soon as possible.
* When BEEP, at this point remove the food from the microwave oven, turn the food over and return to the microwave oven. Press start to continue. At the end of the program, remove the food from the microwave oven, cover with foil and allow to stand until completely thawed. To thaw completely , for example joints of meat and whole chickens should STAND for a minimum of 1 hour before cooking.

Category	Weight Limit	Utensil	Food
Meat **Poultry** **Fish**	0.1 ~ 4.0 kg	Microwave ware (Flat plate)	**Meat** Minced beef, Fillet steak, Cubes for stew, Sirloin steak, Pot roast, Rump roast, Beef burger, Lamp chops, Rolled roast, Cutlets(2cm) When beep, turn food over. After defrosting, let stand for 5-15 minutes. **Poultry** Whole chicken, Legs, Breasts, Turkey breasts(under 2.0kg) When beep, turn food over. After defrosting, let stand for 20-30 minutes. **Fish** Fillets, Steaks, Whole fish, Sea foods When beep, turn food over. After defrosting, let stand for 10-20 minutes.
Bread	0.1 ~ 0.5 kg	Paper towel or flat plate	Sliced bread, Buns, Baguette, etc.

Quick Defrost

Use this function to thaw only 0.5kg of Minced meat very quickly.
This will require a standing time to allow the center to thaw. In the following example will show you how to defrost 0.5kg of frozen meat.

Don't Use

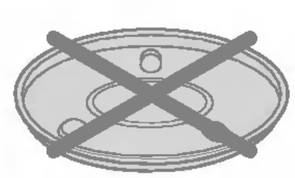

METAL TRAY

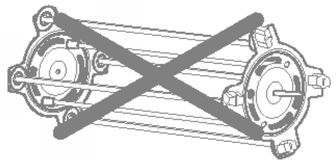

ROTISSERIE

1 Press **STOP/CLEAR.**
Weight the food that you are about to defrost. Be certain to remove any metallic ties or wraps; then place the food in your oven and close the oven door.

2 Press **QUICK DEFROST** once.
(Put the 0.5kg Minced Meat.)

The oven will start automatically.

3 During defrosting your oven will "BEEP", at which point open the oven door, turn food over and separate to ensure even thawing. Remove any portions that have thawed or shield them to help slow down thawing. After checking close oven door and press **START** to resume defrosting.
Your oven will not stop defrosting (even when the beep sounded) unless the door is opened.

QUICK DEFROST GUIDE

Use the Function to defrost quickly for minced meat.
Remove the meat completely from its wrapping. Place the mince onto a microwave-safe plate.
When beeps, at this point remove the mince from the microwave oven, turn the mince over and return to the microwave oven.
Press start to continue. At the end of the program remove the mince from the microwave oven, cover with foil and allow to stand 5-15 minutes or until completely thawed.

Category	*Weight*	*Utensil*	*Instructions*
Minced Meat	0.5 kg	Microwave ware (Flat plate)	Minced meat Turn food over at beep. After defrosting, let stand for 5-15 minutes.

Rotisserie
Cook

In the following example I will show you how to cook 0.5kg of Roast Lamb.

ROTISSERIE COOK MENU allows you to cook most of your favorite food easily by selecting the food type.

Category	*Rotisserie cook*
Roast Beef	Ar-1
Roast Lamb	Ar-2
Kebab	Ar-3
Whole Chicken	Ar-4

Pr

2

Press **ROTISSERIE COOK** of the required food type.
In this examp ress **ROAST LAMB** twice.

3

Select eight of Roast Lamb.
Press **0.1 kg** eight key once.

Pr

Roast Beef **Ar-1**	0.5 – 1.8 kg	Rotisserie over the Metal tray	Refrigerated	1. Brush the beef with melted margarine or butter. 2. Pierce the beef with the roti- bar. Note that the bar pass through the beef completely. 3. Tie the beef with a cotton thread and insert the bar into the roti- holder over the metal tray. 4. Adjust weight and press start. 5. After cooking, remove from the oven. Stand covered with foil for 10- 15 minutes before serving.
Roast Lamb **Ar-2**	0.5 – 1.8 kg	Rotisserie over the Metal tray	Refrigerated	1. Brush the lamb with melted margarine or butter. 2. Pierce the lamb with the roti- bar. Note that the bar pass through the lamb completely. 3. Tie the lamb with a cotton thread and insert the bar into the roti- holder over the metal tray. 4. Adjust weight and press start. 5. After cooking, remove from the oven. Stand covered with foil for 10- 15 minutes before serving.
Kebab **Ar-3**	0.2 – 1.0 kg	Rotisserie over the Metal tray	Refrigerated	1. Cut the meat into the small and equal pieces. Grate the onion and separate its juice. Mix the onion juice and olive oil. Then cover the pieces of meat with the olive oil and onion juice for 3- 4 hours. 2. Fix the meat pieces into the skewers. Note that the skewers pass the meat center. Insert the roti- bar into the Roti- holder over the metal tray. 3. Adjust weight and press start. 4. After cooking, remove from the oven. 600g meat (lamb, beef) 2 tablespoon Salt 1 large onion 1 skewer: approx. 0. 2- 0. 25kg

Whole Chicken **Ar-4**	0.8 – 2.4 kg	Rotisserie over the Metal tray	Refrigerated	Whole chicken approx. 1.2kg (with skin) 2 large onions 3 tablespoon olive oil Salt. 1. Cover the chicken with the onion juice, salt and oil(or butter) for 3- 4 hours. 2. Pierce the chicken with the roti- bar. Note that the bar pass through the chicken completely. 3. Tie its feet, wings and body with a cotton thread and insert the bar into the roti- holder over the metal tray. 4. Adjust weight and press start. 5. After cooking, remove from the oven. Stand covered with aluminium foil for 5 minutes before serving.

CAUTION

Rotisserie is not a toy.
Keep the Rotisserie away
from the child.

B[illegible]to the left plate

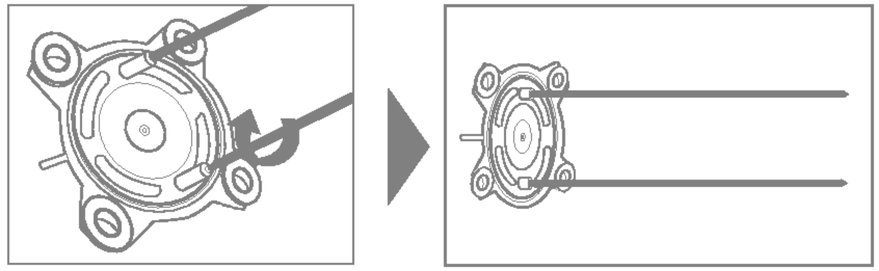

Screw the barbecue bar
clockwise into the left plate

A[illegible]ht plate

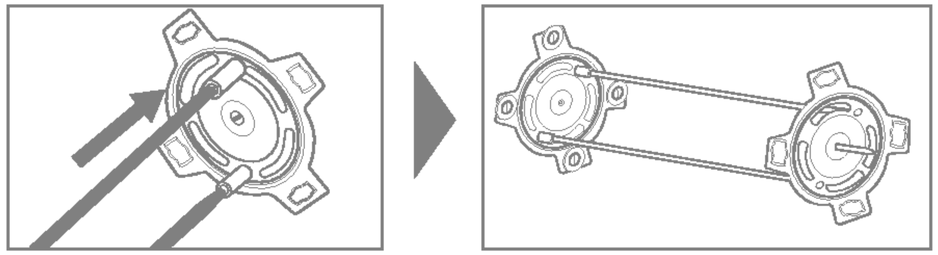

Push barbecue bars into right plate.

A[illegible]ers

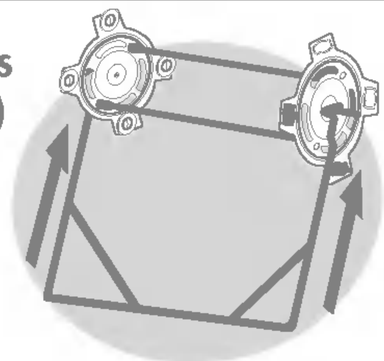

Install the handle on the
rotisserie.

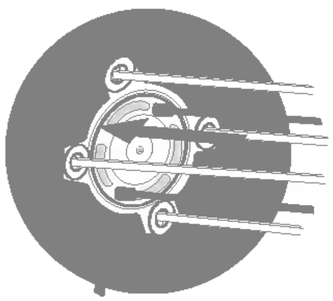

Insert the pointed edge of
the skewer into hole on
the left plate.

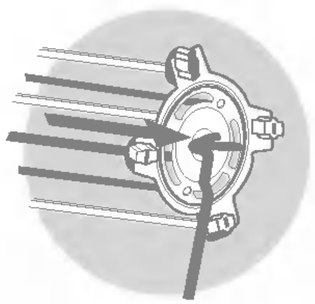

Insert the other edge
of the skewer into a
hole on the right plate.

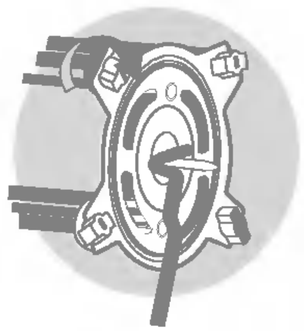

Turn it clockwize until it's
fixed. Repeat 4 times until
rotisserie is assembled.

Rotisserie

Installation & Cooking

CAUTION

Rotisserie is not a toy.
Keep the Rotisserie away from the child.

Press **ROTISSERIE COOK** of the required food type.
In this example press **KEBAB** once.

Press **0.1kg** to set weight.
* See ROTISSERIE COOK (page 22).

Clean the work space, before inserting the kebab.

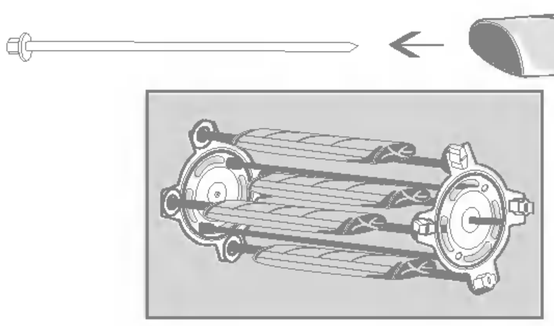

Press **ROTISSERIE COOK** of the required food type.
In this example press **WHOLE CHICKEN** twice.

Press **1.0 kg** or **0.1kg** to set weight.
* See ROTISSERIE COOK (page 22).

Prepare foods with the rotisserie.

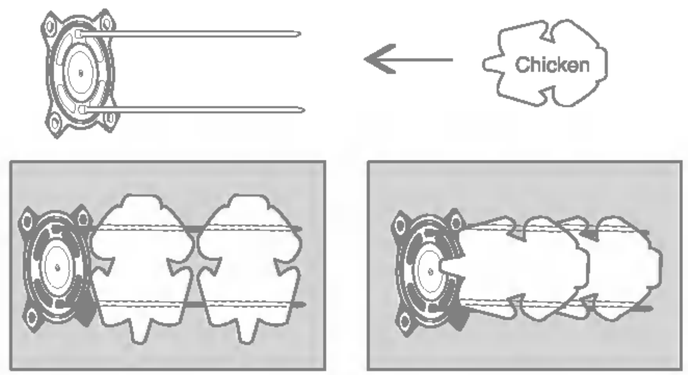

To Clean ROTISSERIE & METAL TRAY

When cooking is completed, separate the ROTISSERIE from the food. Take care when handling both ROTISSERIE & metal tray and food stuff as it is very hot. During cooking it is normal for the ROTISSERIE & metal tray to be stained from the food. Simply clean the ROTISSERIE & metal tray with a warm soapy water and a soft cloth. If the ROTISSERIE & metal tray remain stained after washing, Utensils in hot soapy water for a few minutes.
Do not use metal scouring pads. They will scratch the surface .

2 Insert the shaft of left plate into the shaft of motor.

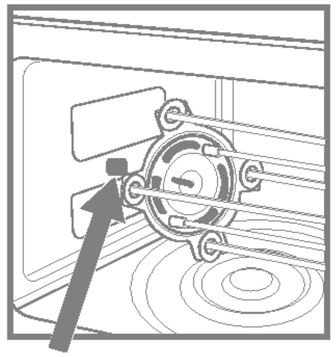

The shaft of motor

3 Put the shaft of right plate on the holder of Rotisserie.

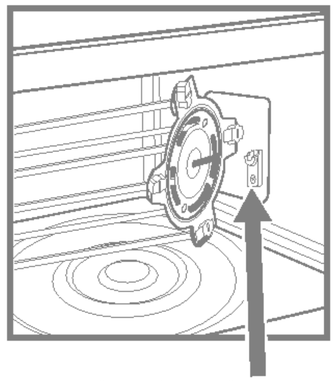

The holder of Rotisserie

4 Press **START**
* See ROTISSERIE COOK (page 22).

After cooking hold the rotisserie bar of both side with the handle and lift up the right end slightly and pull out from the left end.

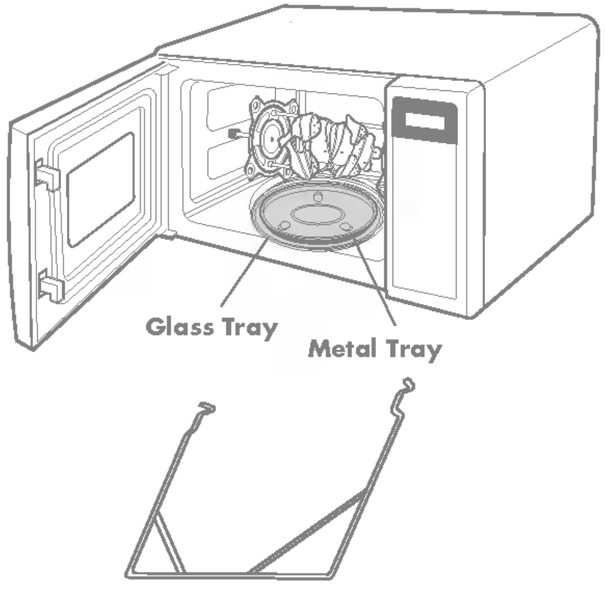

NOTE:

1. The rotisserie cooking is convenient for grilling of meat and poultry. All the surface of the food will become even brown without overturning.
2. The rotisserie cooking can be used in grill mode, convection mode and Persian Cook.
3. The rotisserie bar is used for rotisserie cooking only. After rotisserie cooking is finished remove the rotisserie bar and store with other accessories.

CAUTION

1. DO NOT USE THE METAL TRAY AND ROTISSERIE WITH NO LOAD, IT WILL BE DAMAGED THE OVEN.
2. AFTER COOKING, THE METAL TRAY WILL BECOME EXTREMELY HOT.
3. It is recommended to remove the grease from the turntable every time before cooking. Hot grease on the turntable may cause smoke.

Auto
Reheat

In the following example I will show you how to cook 0.4kg of Chilled Meal.

AUTO REHEAT cooking make food reheating convient and easy to use. The oven has been pre-programmed to automatically reheat food.

Your oven has four **AUTO REHEAT** settings: Chilled Pizza, Soup/Sauce, Chilled Meal, Frozen Meal.

Category	*Auto Reheat*
Chilled Pizza	rh-1
Soup/Sauce	rh-2
Chilled Meal	rh-3
Frozen Meal	rh-4

P

2

Press **AUTO REHEAT** of the required food type
In this example, press **Chilled Meal** once.

3

Select d eight of Chilled Meal.

Press eight key two times to set 0.4 kg.

Pr

Chilled Pizza **rh-1**	0.2 - 0.6 kg	Low rack over the metal tray	Refrigerated	This function is for reheating leftover chilled pizza. Place chilled pizza on the low rack over the metal tray. After cooking, take food out immediately. Stand for 1~2 minutes.
Soup/Sauce **rh-2**	0.2 - 0.6 kg	Microwave-safe bowl	Room	Pour the soup/sauce into a microwave- safe bowl. Cover with lid or plastic wrap. After heating, stir. Allow to stand for 2 minutes with cover. And then stir again.
Chilled meal **rh-3**	0.3 - 0.6 kg	Own tray	Refrigerated	Pierce using a skewer on the surface. Place food on the glass turntable. After cooking, allow to stand for 2- 3 minutes before serving. - Stirrable e. g : Spaghetti bolognese, Beef stew - Non- stirrable e. g : Lasagne, Cottage pie **Note :** For food contained in bag(s), pierce meat portion and rice/ pasta portions, etc. - For stirrable foods, stir at beep. - Non- stirrable foods, it is not necessary to stir at beep.
Frozen meal **rh-4**	0.3 - 0.6 kg	Own tray	Frozen	Same as above.

Auto Cook

In the following example I will show you how to cook 0.5kg of jacket potato.

AUTO COOK allows you to cook most of your favorite food easily by selecting the food type and entering the weight of the food.

Category	*Auto cook*
Jacket Potato	Ac-1
Rice/Pasta	Ac-2
Fresh Vegetable	Ac-3
Frozen Vegetable	Ac-4
Fresh Fish	Ac-5
Frozen Pizza	Ac-6
French Fries	Ac-7
Gratin	Ac-8

Pr

2

Press **AUTO COOK** of the required food type.
In this exam ress **JACKET POTATO** once.

3

Select eight of jacket potato.
Press **0.1 kg** eight key five times.

Pr

Auto Cook	Jacket Potato **Ac-1**	0.1- 1.0 kg	Metal tray	Room	Choose medium sized potatoes 170 -200g. Wash and dry potatoes. Pierce the potatoes several times with a fork. Place the potatoes on the low rack over the metal tray and glass tray. Adjust weight and press start. After cooking, remove the potatoes from the oven. Let stand covered with foil for 5 minutes. CAUTION: The grill and surrounding oven will get very HOT. Use oven gloves.
Don't Use 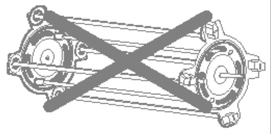 ROTISSERIE	Rice/Pasta **Ac-2**	0.1- 0.3 kg	Microwave-safe bowl	Room	**Rice** Place rice and boiling water with 1/4 to 1 teaspoon salt in a deep and large bowl. Weight: 100g / 200g / 300g Water / Rice: 280ml / 380ml / 500ml Cover: Yes Adjust weight and press start. After cooking, stir and let stand covered for 5 minutes or until water is absorbed. **Pasta** Place pasta and boiling water with 1/4 to 1 teaspoon salt in a deep and large bowl. Weight: 100g / 200g / 300g Water / Pasta: 400ml / 800ml / 1200ml Cover: No Adjust weight and press start. After cooking, stir and let stand for 1 - 2 minutes. Rinse pasta with cold water.

Auto Cook	Fresh Vegetable **Ac-3**	0.2 – 0.8 kg	Microwave-safe bowl	Room	Place vegetables in a microwave- safe bowl. Add water. Cover with wrap. Adjust weight and press start. After cooking, stir and allow to stand for 2minutes. Add amount of water according to the quantity. ** 0.2kg - 0.4 kg : 2 Tablespoon ** 0.5kg - 0.8 kg : 4 Tablespoon
Don't Use	Frozen Vegetable **Ac-4**	0.2 – 0.8 kg	Microwave-safe bowl	Frozen	Place vegetables in a microwave- safe bowl. Add water. Cover with wrap. Adjust weight and press start. After cooking, stir and allow to stand for 2 minutes. Add amount of water according to the quantity. ** 0. 2kg - 0. 4kg : 2 Tablespoon ** 0. 5kg - 0. 8kg : 4 Tablespoon
ROTISSERIE	Fresh Fish **Ac-5**	0.1 - 0.6 kg	Microwave-safe flan dish	Refrigerated	Whole fish, steaks - Oily fish : salmon, mackerel - White fish : cod, haddock Arrange in a single layer in a large microwave- safe flan dish. Add 2 tablespoons of lemon juice. Cover dish tightly with plastic wrap and pierce in several places. Place on the glass turntable. Adjust weight and press start. After cooking, remove the dish from the oven. Allow to stand for 3 minutes before serving.
	Frozen Pizza **Ac-6**	0.1 – 0.6 kg	Low rack over the metal tray	Frozen	This function is for cooking frozen pizza. Remove all package and place on low rack over the metal tray. After cooking, stand for 1~ 2 minutes.

Auto Cook	French fries **Ac-7**	0.2 – 0.5 kg	High rack on the Metal tray	Frozen	Spread frozen potato products out on the metal tray on the high rack. For the best results, cook in a single layer. After cooking, remove from the oven and stand for 1~ 2 minutes.
	Gratin **Ac-8**	0.5 –1.2 kg	Low rack over the Metal tray	Room	Use this key to cook home made Gratins. *Potato Gratin * Ingredients 400g potatoes 100g onions(cut into thin slices) 2/3tablespoon butter 3 slices of bacon 350g white sauce 80g shredded mozzarella cheese Salt, black pepper **(White Sauce)** 3 tablespoon butter, 5 tablespoon flour, 2 1/2 cups of milk Place butter in a large bowl. Microwave at HIGH until butter melts. Add flour and microwave for 2 minutes at HIGH. Add milk, salt and black pepper. Microwave at HIGH for15 minutes. (During cooking, stir several times.) **Method** 1. Bake potatoes for 7-8 minutes on Microwave HIGH. And then peel and slice into small size. Add salt, pepper. 2. Combine onions and butter in a bowl. Microwave at HIGH for 2 minutes. 3. Place one third of the white sauce in gratin dish. Add potatoes, onions and bacon. Cover with the rest of the white sauce. 4. Sprinkle with cheese. Place on low rack over the metal tray. After cooking, stand for 2~ 3 minutes.

Don't Use

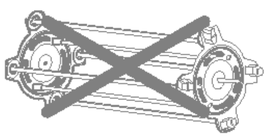

ROTISSERIE

More or Less Cooking

In the following example I will show you how to change the preset Auto Cook, Auto Reheat, Rotisserie Cook programmes for a longer or shorter cooking time.

If you find that your food is over or undercooked when using the AUTO COOK MENU programme, you can increase or decrease cooking time by pressing the ⊕ / ⊖ key.

When cooking with auto and manual function, you can lengthen or shorten the cooking time at any point by pressing the ⊕ / ⊖ key.
There is no need to stop the cooking process.

Pr[illegible]

2

Set the r[illegible] **AUTO COOK** programme.
* See AUTO [illegible]OK (page 30).

Select weight of food.
Press **START.**

3

Press M[illegible] (⊕)
The cookin[illegible]e will increase by **10** seconds for each press of the key.

Press **LESS.** (⊖)
The cooking time will decrease by **10** seconds for each press of the key.

WARNING

Please ensure cooking times are correctly set as over cooking may result in FIRE and subsequent DAMAGE to the OVEN.

Important safety instructions

Read carefully and keep for future reference

1 Do not attempt to tamper with, or make any adjustments or repairs to the door, control panel, safety interlock switches or any other part of the oven. It is hazardous for anyone to carry out any service or repair operation which involves the removal of any cover which gives protection against exposure to microwave energy. Repairs should only be undertaken by a qualified service technician.

2 Do not operate the oven when empty. It is best to leave a glass of water in the oven when not in use. The water will safely absorb all microwave energy, if the oven is accidentally started.

3 Do not use the oven for the purpose of dehumidification. It can be the cause of serious damage of safety. (ex. Operating the microwave oven with the wet newspapers, clothes, toys, pet or portable electric devices, etc.)

4 Do not cook food wrapped in paper towels, unless your cook book contains instructions, for the food you are cooking.

5 Do not use newspaper in place of paper towels for cooking.

6 Do not use wooden containers. They may heat-up and char. Do not use ceramic containers which have metallic (e.g. gold or silver) inlays. Always remove metal twist ties. Metal objects in the oven may arc, which can cause serious damage.

7 Do not operate the oven with a kitchen towel, a napkin or any other obstruction between the door and the front edges of the oven, which may cause microwave energy leakage.

8 Do not use recycled paper products since they may contain impurities which may cause sparks and/or fires when used in cooking.

9 Do not rinse the turntable by placing it in water just after cooking. This may cause breakage or damage.

10 Small amounts of food require shorter cooking or heating time. If normal times are allowed they may overheat and burn.

11 Be certain to place the oven so the front of the door is 8 cm or more behind the edge of the surface on which it is placed, to avoid accidental tipping of the appliance.

12 Before cooking, pierce the skin of potatoes, apples or any such fruit or vegetable.

13 Do not cook eggs in their shell. Pressure will build up inside the egg which will burst.

14 Do not attempt deep fat frying in your oven.

15 Remove the plastic wrapping from food before cooking or defrosting. Note though that in some cases food should be covered with plastic film, for heating or cooking.

16 If the oven door or door seals are damaged, the oven must not be operated until it has been repaired by a qualified service technician.

17 If smoke is observed, switch off or disconnect the oven from the power supply and keep the oven door closed in order to stifle any flames.

18 When food is heated or cooked in disposable containers of plastic, paper or other combustible materials, check the oven frequently due to the possibility of the food container is deteriorating.

19 Only allow children to use the oven without supervision when adequate instructions have been given so that the child is able to use the oven in a safe way and understands the hazards of improper use.

20 Liquids or other foods must not be heated in sealed containers since they are liable to explode.

21 Do not operate the oven, if the door seals and adjacent parts of the microwave oven are faulty, until the oven has been repaired by a qualified service technician.

22 Check the utensils are suitable for use in microwave ovens before use.

23 Do not touch the oven door, outer cabinet, rear cabinet, oven cavity, accessories and dishes during grill mode, convection mode and auto cook operations, unless wearing thick oven gloves, as they will become hot. Before clearing make sure they are not hot.

Important safety instructions

Read carefully and keep for future reference

24 Only use utensils that are suitable for use in microwave ovens.

25 When heating food in plastic or paper containers, keep an eye on the oven due to the possibility of ignition.

26 If smoke is observed, switch off or unplug the appliance and keep the door closed in order to stifle any flames.

27 Microwave heating of beverages can result in delayed eruptive boiling, therefore care must be taken when handing the container.

28 The contents of feeding bottles and baby food jars shall be stirred or shaken and the temperature checked before consumption, in order to avoid burns.

29 Eggs in their shell and whole hard-boiled eggs should not be heated in microwave ovens since they may explode, even after microwave heating has ended.

30 Details for cleaning door seals, cavities and adjacent parts.

31 The oven should be cleaned regularly and any food deposits removed.

32 Failure to maintain the oven in a clean condition could lead to deterioration of the surface that could adversely affect the life of the appliance and possibly result in a hazardous situation.

33 Only use the temperature probe recommended for this oven (for appliances having a facility to use a temperature-sensing probe).

34 If heating elements are provided, during use the appliance becomes hot. Care should be taken to avoid touching heating elements inside the oven.

35 The appliance is not intended for use by young children or infirm persons without supervision.

WARNING: If the door or door seals are damaged, the oven must not be operated until it has been repaired by a competent person.

WARNING: It is hazardous for anyone other than a competent person to carry out any service or repair operation that involves the removal of a cover which gives protection against exposure to microwave energy.

WARNING: Liquids and other foods must not be heated in sealed containers since they are liable to explode.

WARNING: Only allow children to use the oven without supervision when adequate instructions have been given so that the child is able to use the oven in a safe way and understands the hazards of improper use.

Microwave-safe Utensils

Never use metal or metal trimmed utensils in your microwave oven

Microwaves cannot penetrate metal. They will bounce off any metal object in the oven and cause arcing, an alarming phenomenon that resembles lightning.

Most heat resistant non metallic cooking utensils are safe for use in your microwave oven. However, some may contain materials that render them unsuitable as microwave cookware. If you have any doubts about a particular utensil, there's a simple way to find out if it can be used in your microwave oven.

Place the utensil in question next to a glass bowl filled with water in the microwave oven. Microwave at power HIGH for 1 minute. If the water heats up but the utensil remains cool to the touch, the utensil is microwave~safe. However, if the water does not change temperature but the utensil becomes warm, microwaves are being absorbed by the utensil and it is not safe for use in the microwave oven. You probably have many items on hand in your kitchen right now that can be used as cooking equipment in your microwave oven. Just read through the following checklist.

Dinner plates

Many kinds of dinner-ware are microwave-safe. If in doubt consult the manufacturer's literature or perform the microwave test.

Glassware

Glassware that is heat-resistant is microwave-safe. This would include all brands of oven tempered glass cookware. However, do not use delicate glassware, such as tumblers or wine glasses, as these might shatter as the food warms.

Plastic storage containers

These can be used to hold foods that are to be quickly reheated. However, they should not be used to hold foods that will need considerable time in the oven as hot foods will eventually warp or melt plastic containers.

Paper

Paper plates and containers are convenient and safe to use in your microwave oven, provided that the cooking time is short and foods to be cooked are low in fat and moisture. Paper towels are also very useful for wrapping foods and for lining baking trays in which greasy foods such as bacon are cooked. In general, avoid coloured paper products as the colour may run. Some recycled paper products may contain impurities which could cause arcing or fires when used in the microwave oven.

Plastic cooking bags

Provided they are made specially for cooking, cooking bags are microwave safe. However, be sure to make a slit in the bag so that steam can escape. Never use ordinary plastic bags for cooking in your microwave oven, as they will melt and rupture.

Plastic microwave cookware

A variety of shapes and sizes of microwave cookware are available. For the most part, you can probably use items you already have on hand rather than investing in new kitchen equipment.

Pottery, stoneware and ceramic

Containers made of these materials are usually fine for use in your microwave oven, but they should be tested to be sure.

CAUTION

Some items with high lead or iron content are not suitable for cooking utensils.

Utensils should be checked to ensure that they are suitable for use in microwave ovens.

Food characteristics &
Microwave cooking

Keeping an eye on things

The recipes in the book have been formulated with great care, but your success in preparing them depends on how much attention you pay to the food as it cooks. Always watch your food while it cooks. Your microwave oven is equipped with a light that turns on automatically when the oven is in operation so that you can see inside and check the progress of your food. Directions given in recipes to elevate, stir, and the like should be thought of as the minimum steps recommended. If the food seems to be cooking unevenly, simply make the necessary adjustments you think appropriate to correct the problem.

Factors affecting microwave cooking times

Many factors affect cooking times. The temperature of ingredients used in a recipe makes a big difference in cooking times. For example, a cake made with ice-cold butter, milk, and eggs will take considerably longer to bake than one made with ingredients that are at room temperature. All of the recipes in this book give a range of cooking times. In general, you will find that the food remains under-cooked at the lower end of the time range, and you may sometimes want to cook your food beyond the maximum time given, according to personal preference. The governing philosophy of this book is that it is best for a recipe to be conservative in giving cooking times. While overcooked food is ruined for good. Some of the recipes, particularly those for bread, cake, and custards, recommend that food be removed from the oven when they are slightly undercooked. This is not a mistake. When allowed to stand, usually covered, these foods will continue to cook outside of the oven as the heat trapped within the outer portions of the food gradually travels inward. If the food is left in the oven until it is cooked all the way through, the outer portions will become overcooked or even burnt. You will become increasingly skilful in estimating both cooking and standing times for various foods.

Density of food

Light, porous food such as cakes and breads cook more quickly than heavy, dense foods such as roasts and casseroles. You must take care when microwaving porous food that the outer edges do not become dry and brittle.

Height of food

The upper portion of tall food, particularly roasts, will cook more quickly than the lower portion. Therefore, it is wise to turn tall food during cooking, sometimes several times.

Moisture content of food

Since the heat generated from microwaves tends to evaporate moisture, relatively dry food such as roasts and some vegetables should either be sprinkled with water prior to cooking or covered to retain moisture.

Bone and fat content of food

Bones conduct heat and fat cooks more quickly than meat. Care must be taken when cooking bony or fatty cuts of meat that they do not cook unevenly and do not become overcooked.

Quantity of food

The number of microwaves in your oven remains constant regardless of how much food is being cooked. Therefore, the more food you place in the oven, the longer the cooking time. Remember to decrease cooking times by at least one third when halving a recipe.

Shape of food

Microwaves penetrate only about 2.cm into food, the interior portion of thick foods are cooked as the heat generated on the outside travels inward. Only the outer edge of food in cooked by microwave energy; the rest is cooked by conduction. The worst possible shape for a food that is to be microwaved is a thick square. The corners will burn long before the centre is even warm . Round thin foods and ring shaped foods cook successfully in the microwave.

Covering

A cover traps heat and steam which causes food to cook more quickly. Use a lid or microwave cling film with a corner folded back to prevent splitting.

Browning

Meats and poultry that are cooked fifteen minutes or longer will brown lightly in their own fat. Food that are cooked for a shorter period of time may be brushed with a browning sauce such as worcestershire sauce, soy sauce or barbecue sauce to achieve an appetizing colour. Since relatively small amounts of browning sauces are added to food the original flavor of the recipe is not altered.

Covering with greaseproof paper

Greaseproofing effectively prevents spattering and helps food retain some heat. But because it makes a looser cover than a lid or clingfilm, it allows the food to dry out slightly.

Arranging and spacing

Individual foods such as baked potatoes, small cakes and hors d'oeuvres will heat more evenly if placed in the oven an equal distance apart, preferably in a circular pattern. Never stack foods on top of one another.

Stirring
Stirring is one of the most important of all microwaving techniques. In conventional cooking, food is stirred for the purpose of blending. Microwaved food, however, is stirred in order to spread and redistribute heat. Always stir from the outside towards the centre as the outside of the food heats first.

Turning over
Large, tall foods such as roasts and whole chickens should be turned so that the top and bottom will cook evenly. It is also a good idea to turn cut up chicken and chops.

Placing thicker portions facing outwards
Since microwaves are attracted to the outside portion of food, it makes sense to place thicker portions of meat, poultry and fish to the outer edge of the baking dish. This way, thicker portions will receive the most microwave energy and the food will cook evenly.

Shielding
Strips of aluminum foil (which block microwaves) can be placed over the corners or edges of square and rectangular foods to prevent those portions from overcooking. Never use too much foil and make sure the foil is secured to the dish or it may cause 'arcing' in the oven.

Elevating
Thick or dense foods can be elevated so that microwaves can be absorbed by the underside and centre of the foods.

Piercing
Foods enclosed in a shell, skin or membrane are likely to burst in the oven unless they are pierced prior to cooking. Such foods include yolks and whites of eggs, clams and oysters and whole vegetables and fruits.

Testing if cooked
Food cooks so quickly in a microwave oven, it is necessary to test it frequently. Some foods are left in the microwave until completely cooked, but most foods, including meats and poultry, are removed from the oven while still slightly undercooked and allowed to finish cooking during standing time. The internal temperature of foods will rise between 5˚F (3˚C) and 15˚F (8˚C) during standing time.

Standing time
Foods are often allowed to stand for 3 to 10 minutes after being removed from the microwave oven. Usually the foods are covered during standing time to retain heat unless they are supposed to be dry in texture (some cakes and biscuits, for example). Standing allows foods to finish cooking and also helps flavor blend and develop.

To Clean Your Oven

1 **Keep the inside of the oven clean**
Your microwave oven has a stainless steel interior. Unlike painted steel interiors found in most other microwave ovens, the surface will not chip, rust, or corrode. Over time, stains can occur on the stainless steel surface as the result of food products splattering during cooking. This is normal.
Do not use metal scouring pads on the inside of oven cavity. They will scratch the surface.
For interior surfaces: Wash often with warm, sudsy water and a sponge or soft cloth. **Use** only mild, non-abrasive soaps or a mild detergent. **Be sure to keep the areas clean where the door and oven frame touch when closed. Wipe** well with clean water. Over time, stains can occur on the surfaces as the result of food particles spattering during cooking. This is nor-mal.
For stubborn soil, **boil** a cup (250 mL) of water in the oven for 2 or 3 minutes. Steam will soften the soil. To get rid of odors inside the oven, **boil** a cup (250 mL) of water with lemon juice or vinegar.

2 **Keep the outside of the oven clean**
Clean the outside of your oven with soap and water then with clean water and dry with a soft cloth or paper towel. To prevent damage to the operating parts inside the oven, the water should not be allowed to seep into the ventilation openings. To clean control panel, open the door to prevent oven from accidentally starting, and wipe a damp cloth followed immediately by a dry cloth. Press STOP/CLEAR after cleaning.

3 If steam accumulates inside or around the outside of the oven door, wipe the panels with a soft cloth. This may occur when the microwave oven is operated under high humidity conditions and in no way indicates a malfunction of the unit.

4 The door and door seals should be kept clean. Use only warm, soapy water, rinse then dry thoroughly.
DO NOT USE ABRASIVE MATERIALS, SUCH AS CLEANING POWDERS OR STEEL AND PLASTIC PADS.
Metal parts will be easier to maintain if wiped frequently with a damp cloth.

Questions &
Answers

Q What's wrong when the oven light will not glow?
A There may be several reasons why the oven light will not glow.
Light bulb has blown
Door is not closed

Q Does microwave energy pass through the viewing screen in the door?
A No. The holes, or ports, are made to allow light to pass; they do not let microwave energy through.

Q Why does the beep tone sound when a pad on the Control Panel is touched?
A The beep tone sounds to assure that the setting is being properly entered.

Q Will the microwave oven be damaged if it operates empty?
A Yes Never run it empty or without the glass tray.

Q Why do eggs sometimes pop?
A When baking, frying, or poaching eggs, the yolk may pop due to steam build up inside the yolk membrane. To prevent this, simply pierce the yolk before cooking. Never microwave eggs in the shell.

Q Why is standing time recommended after microwave cooking is over?
A After microwave cooking is finished, food keeps on cooking during standing time. This standing time finishes cooking evenly throughout the food. The amount of standing time depends on the density of the food.

Q Is it possible to pop corn in a microwave oven?
A Yes, if using one of the two methods described below
1 Popcorn-popping utensils designed specifically for microwave cooking.
2 Prepackaged commercial microwave popcorn that contains specific times and power outputs needed for an acceptable final product.

FOLLOW EXACT DIRECTIONS GIVEN BY EACH MANUFACTURER FOR THEIR POPCORN PRODUCT. DO NOT LEAVE THE OVEN UNATTENDED WHILE THE CORN IS BEING POPPED. IF CORN FAILS TO POP AFTER THE SUGGESTED TIMES, DISCONTINUE COOKING. OVERCOOKING COULD RESULT IN THE CORN CATCHING FIRE.

CAUTION
NEVER USE A BROWN PAPER BAG FOR POPPING CORN. NEVER ATTEMPT TO POP LEFTOVER KERNELS.

Q Why doesn't my oven always cook as fast as the cooking guide says?
A Check your cooking guide again to make sure you've followed directions correctly, and to see what might cause variations in cooking time. Cooking guide times and heat settings are suggestions, chosen to help prevent overcooking, the most common problem in getting used to a microwave oven. Variations in the size, shape, weight and dimensions of the food require longer cooking time. Use your own judgement along with the cooking guide suggestions to test food condition, lust as you would do with a conventional cooker.

Warning

The wires in this mains lead are colored in accordance with the following codes
BLUE ~ Neutral
BROWN ~ Live
GREEN & YELLOW ~ Earth

As the colors of the wires in the mains lead of this appliance may not correspond with the coloured markings identifying the terminals in your plug proceed as follows:

The wire which is colored BLUE must be connected to the terminal which is marked with the letter N or Colored BLACK.

The wire which is colored BROWN must be connected to the terminal which is marked with the letter L or colored RED.

The wire which is colored GREEN & YELLOW or GREEN must be connected to the terminal which is marked with the letter E or ⏚ .

If the supply cord is damaged, it must be replaced by the manufacturer or its service agent or a similarly qualified person in order to avoid a hazard;

Technical Specification

	MC-9243JLR
Power Input	230 V AC / 50 Hz
Output	900 W (IEC60705 rating standard)
Microwave Frequency	2450 MHz
Outside Dimension	574 mm(W) X 376 mm(H) X 505 mm(D)
Power Consumption	
Microwave	1300 Watts
Grill	1250 Watts
Combination	2800 Watts
Convection	1550 Watt (Max 2750 Watts)

Memo

Memo

LG

Printed in Korea