DVD MICRO HI-FI SYSTEM

OWNER'S MANUAL

MODEL : LX-D3350

(LX-D3350A/D/X, LXS-D3350V, LXS-D3350W)

Please read this manual carefully before operating your set.
Retain it for future reference.

Designs and specifications are subject to change without notice for improvement.

Safety Precautions

CAUTION: TO REDUCE THE RISK OF ELECTRIC SHOCK
DO NOT REMOVE COVER (OR BACK)
NO USER-SERVICEABLE PARTS INSIDE
REFER SERVICING TO QUALIFIED SERVICE PERSONNEL.

This lightning flash with arrowhead symbol within an equilateral triangle is intended to alert the user to the presence of uninsulated dangerous voltage within the product's enclosure that may be of sufficient magnitude to constitute a risk of electric shock to persons.

The exclamation point within an equilateral triangle is intended to alert the user to the presence of important operating and maintenance (servicing) instructions in the literature accompanying the product.

WARNING: TO REDUCE THE RISK OF FIRE OR ELECTRIC SHOCK, DO NOT EXPOSE THIS PRODUCT TO RAIN OR MOISTURE.

WARNING: Do not install this equipment in a confined space such as a book case or similar unit.

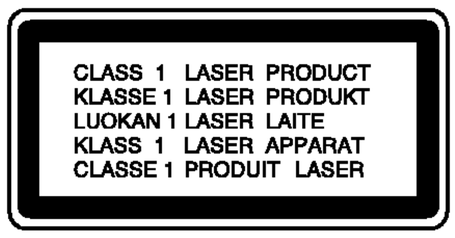

CAUTION:

This unit employs a Laser System.

To ensure proper use of this product, please read this owner's manual carefully and retain for future reference should the unit require maintenance, contact an authorized service location (see service procedure).

Use of controls, adjustments, or the performance of procedures other than those specified herein may result in hazardous radiation exposure.

To prevent direct exposure to laser beam, do not try to open the enclosure. Visible laser radiation when open. DO NOT STARE INTO BEAM.

CAUTION: The apparatus should not be exposed to water (dripping or splashing) and no objects filled with liquids, such as vases, should be placed on the apparatus.

CAUTION concerning the Power Cord

Most appliances recommend they be placed upon a dedicated circuit;
That is, a single outlet circuit which powers only that appliance and has no additional outlets or branch circuits. Check the specification page of this owner's manual to be certain.

Do not overload wall outlets. Overloaded wall outlets, loose or damaged wall outlets, extension cords, frayed power cords, or damaged or cracked wire insulation are dangerous. Any of these conditions could result in electric shock or fire.

Periodically examine the cord of your appliance, and if its appearance indicates damage or deterioration, unplug it, discontinue use of the appliance, and have the cord replaced with an exact replacement part by an authorized servicer.

Protect the power cord from physical or mechanical abuse, such as being twisted, kinked, pinched, closed in a door, or walked upon. Pay particular attention to plugs, wall outlets, and the point where the cord exits the appliance.

POWER: This unit operates on a mains supply of 220V, 50Hz.

WIRING: This unit is supplied with a BSI 1363 approved 13 amp mains plug, fused at 3 amp. When replacing the fuse always use a 3 amp BS 1362, BSI or ASTA approved type. Never use this plug with the fuse cover omitted. To obtain a replacement fuse cover contact your dealer. If the type of plug supplied is not suitable for the mains sockets in your home, then the plug should be removed and a suitable type fitted. Please refer to the wiring instructions below:

WARNING: A mains plug removed from the mains lead of this DVD player must be destroyed. A mains plug with bared wires is hazardous if inserted in a mains socket.

Do not connect either wire to the earth pin, marked with the letter E or with the earth symbol ⏚ or coloured green or green and yellow.

If any other plug is fitted, use a 3 amp fuse, either in the plug, or at the distribution board.

IMPORTANT: The wires in this mains lead are coloured in accordance with the following codes:

- BLUE: NEUTRAL, BROWN: LIVE - As the colours of the wires in the mains lead of this DVD player may not correspond with the coloured marking identifying the terminals in your plug, proceed as follows: The wire which is coloured blue must be connected to the terminal which is marked with the letter N or coloured black. The wire which is coloured brown must be connected to the terminal which is marked with the letter L or coloured red.

Table of Contents

INTRODUCTION

Safety Precautions 2
Table of Contents 3
Before Use 4-5
Playable Discs 4
Precautions 5
Notes on Discs 5
About Symbols 5
Front Panel/ Rear Panel 6
Remote Control 7

PREPARATION

Connections 8-10
Connecting to a TV 8
Connecting to Antenna. 9
Speaker System Connection 9
Connecting to Auxiliary Equipment 10
Connecting to Optional Equipment 10
Before Operation 11-19
Volume Adjustment. 11
Sub woofer level Adjustment 11
MUTE 11
Sound Quality Adjustment 11
SURROUND 11
XDSS (Extreme Dynamic Sound System) 11
OAO (Orientation Acoustic Optimizer) ON/OFF. . 11
DIMMER 11
Setting the Clock 12
Sleep Timer Function 12
Using Microphone (OPTIONAL) 12
Timer Function. 13
Mini Glossary for Audio Stream & Surround Mode 14
Sound Mode 14
General Explanation. 15
On-Screen Display. 15
Initial Settings 16-19
- General Operation 16
- LANGUAGE 16
- DISPLAY 17
- AUDIO. 18
- OTHERS 18
- LOCK (Parental Control) 19

OPERATION

Operation with RADIO 20-21
Presetting the radio stations. 20
Listening to the radio 20
RDS Function - OPTIONAL 21
- About RDS 21
- Programme Search (PTY) 21

Operation with TAPE 22
Basic Playback 22
To Stop Play 22
Tape Counter Reset. 22
To Play Rewind or Fast Forward 22
Recording from Radio, CD or Auxiliary source . . 22
CD- Synchro Recording 22

Operation with DVD and Video CD 23-25
Playing a DVD and Video CD. 23
General Features 23-25
- Moving to another TITLE 23
- Moving to another CHAPTER/TRACK 23
- Search. 23
- Still Picture and Frame-by-Frame Playback . 24
- Slow Motion. 24
- Repeat 24
- Repeat A-B 24
- Time Search 24
- Last Scene Memory. 24
- Zoom. 25
- Marker Search. 25

Special DVD Features 25
- Title Menu 25
- Disc Menu 25
- Camera Angle 25
- Changing the Audio Language 25
- Changing the Audio Channel 25
- Subtitles 25

Operation with Audio CD and MP3/WMA Disc 26-27
Playing an Audio CD and MP3/WMA Disc 26
- Pause 27
- Moving to another Track 27
- Repeat Track/ All/ Off. 27
- Search. 27

Operation with JPEG Disc. 28
Viewing a JPEG disc 28
- Slide Show 28
- Moving to another File 28
- Still Picture 28

Programmed Playback 29
- Repeat Programmed Tracks 29
- Erasing a Track from Program List. 29
- Erasing the Complete Program List 29

Operation with DivX Disc 30

REFERENCE

Troubleshooting 31
Language Code List 32
Country Code List 33
Specifications 34

About the symbols for instructions

⚠ Indicates hazards likely to cause harm to the unit itself or other material damage.

N Indicates special operating features of this unit.

T Indicates tips and hints for making the task easier.

Playable Discs

DVD VIDEO	DVD (8 cm / 12 cm disc)
COMPACT disc DIGITAL VIDEO	Video CD (VCD) (8 cm / 12 cm disc)
COMPACT disc DIGITAL AUDIO	Audio CD (8 cm / 12 cm disc)

In addition, this unit can play a DVD±R, DVD±RW, SVCD, and CD-R or CD-RW that contains audio titles, MP3, WMA, JPEG or DivX files.

Notes

– Depending on the conditions of the recording equipment or the CD-R/RW (or DVD±R/RW) disc itself, some CD-R/RW (or DVD±R/RW) discs cannot be played on the unit.
– Do not attach any seal or label to either side (the labeled side or the recorded side) of a disc.
– Do not use irregularly shaped CDs (e.g., heart-shaped or octagonal). It may result in malfunctions.

Notes on DVDs and Video CDs

Some playback operations of DVDs and Video CDs may be intentionally fixed by software manufacturers. As this unit plays DVDs and Video CDs according to disc content designed by the software manufacturer, some playback features of the unit may not be available or other functions may be added.
Refer also to the instructions supplied with the DVDs and Video CDs. Some DVDs made for business purposes may not be played on the unit.

Regional code of the DVD player and DVDs
Your system has a region code printed on the back of the unit and will only play DVDs labelled with the same region code.

DVDs labelled (ALL) will also play on this system.
If you try to play any other DVD, the message “Check Regional Code” will appear on the TV screen.
Depending on the DVD, no region code indication may be labelled even though playing the DVD is prohibited by area restrictions.

Disc-related terms

Title (DVD only)
The main film content or accompanying feature content or additional feature content, or music album.
Each title is assigned a title reference number enabling you to locate it easily.

Chapter (DVD only)
Sections of a picture or a musical piece that are smaller than titles. A title is composed of one or several chapters. Each chapter is assigned a chapter number, enabling you to locate the chapter you want. Depending on the disc, chapters may not be recorded.

Track (Video CD and audio CD only)
Sections of a picture or a musical piece on a video CD or an audio CD. Each track is assigned a track number, enabling you to locate the track you want.

Scene
On a video CD with PBC (Playback control) functions, moving pictures and still pictures are divided into sections called “Scenes”. Each scene is displayed in the menu screen and assigned a scene number, enabling you to locate the scene you want.
A scene is composed of one or several tracks.

Types of video CDs

There are two types of video CDs:

Video CDs equipped with PBC (Version 2.0)
PBC (Playback control) functions allow you to interact with the system via menus, search functions, or other typical computer-like operations. Moreover, still pictures of high resolution can be played if they are included in the disc.

Video CDs not equipped with PBC (Version 1.1)
Operated in the same way as audio CDs, these discs allow playback of video pictures as well as sound, but they are not equipped with PBC.

Precautions

Handling the unit

When shipping the unit
The original shipping carton and packing materials come in handy. For maximum protection, re-pack the unit as it was originally packed at the factory.

When setting up the unit
The picture and sound of a nearby TV, VCR, or radio may be distorted during playback. In this case, position the unit away from the TV, VCR, or radio, or turn off the unit after removing the disc.

To keep the exterior surfaces clean
Do not use volatile liquids, such as insecticide spray, near the unit. Do not leave rubber or plastic products in contact with the unit for a long period of time. They will leave marks on the surface.

Cleaning the unit

To clean the cabinet
Use a soft, dry cloth. If the surfaces are extremely dirty, use a soft cloth lightly moistened with a mild detergent solution. Do not use strong solvents such as alcohol, benzine, or thinner, as these might damage the surface of the unit.

To obtain a clear picture
The DVD player is a high-tech, precision device. If the optical pick-up lens and disc drive parts are dirty or worn, the picture quality will be poor.
Regular inspection and maintenance are recommended after every 1,000 hours of use. (This depends on the operating environment.)
For details, please contact your nearest dealer.

Notes on Discs

Handling discs

Do not touch the playback side of the disc.
Hold the disc by the edges so that fingerprints will not get on the surface.
Do not stick paper or tape on the disc.

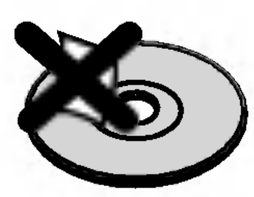

Storing discs

After playing, store the disc in its case.
Do not expose the disc to direct sunlight or sources of heat, or leave it in a parked car exposed to direct sunlight, as there may be a considerable temperature increase inside the car.

Cleaning discs

Fingerprints and dust on the disc can cause poor picture quality and sound distortion. Before playing, clean the disc with a clean cloth. Wipe the disc from the center out.

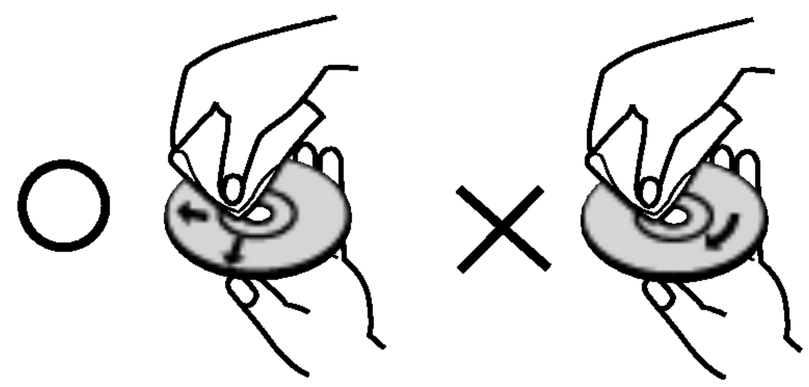

Do not use strong solvents such as alcohol, benzine, thinner, commercially available cleaners, or anti-static spray intended for older vinyl records.

About Symbols

About the ✋ symbol display

" ✋ " may appear on the TV screen during operation. This icon means the function explained in this owner's manual is not available on that specific DVD video disc.

About the disc symbols for instructions

A section whose title has one of the following symbol is applicable only to the disc represented by the symbol.

- DVD — DVD
- VCD — Video CDs
- CD — Audio CDs
- MP3 — MP3 disc
- WMA — WMA disc
- JPEG — JPEG disc
- DivX — DivX disc

Front Panel/ Rear Panel

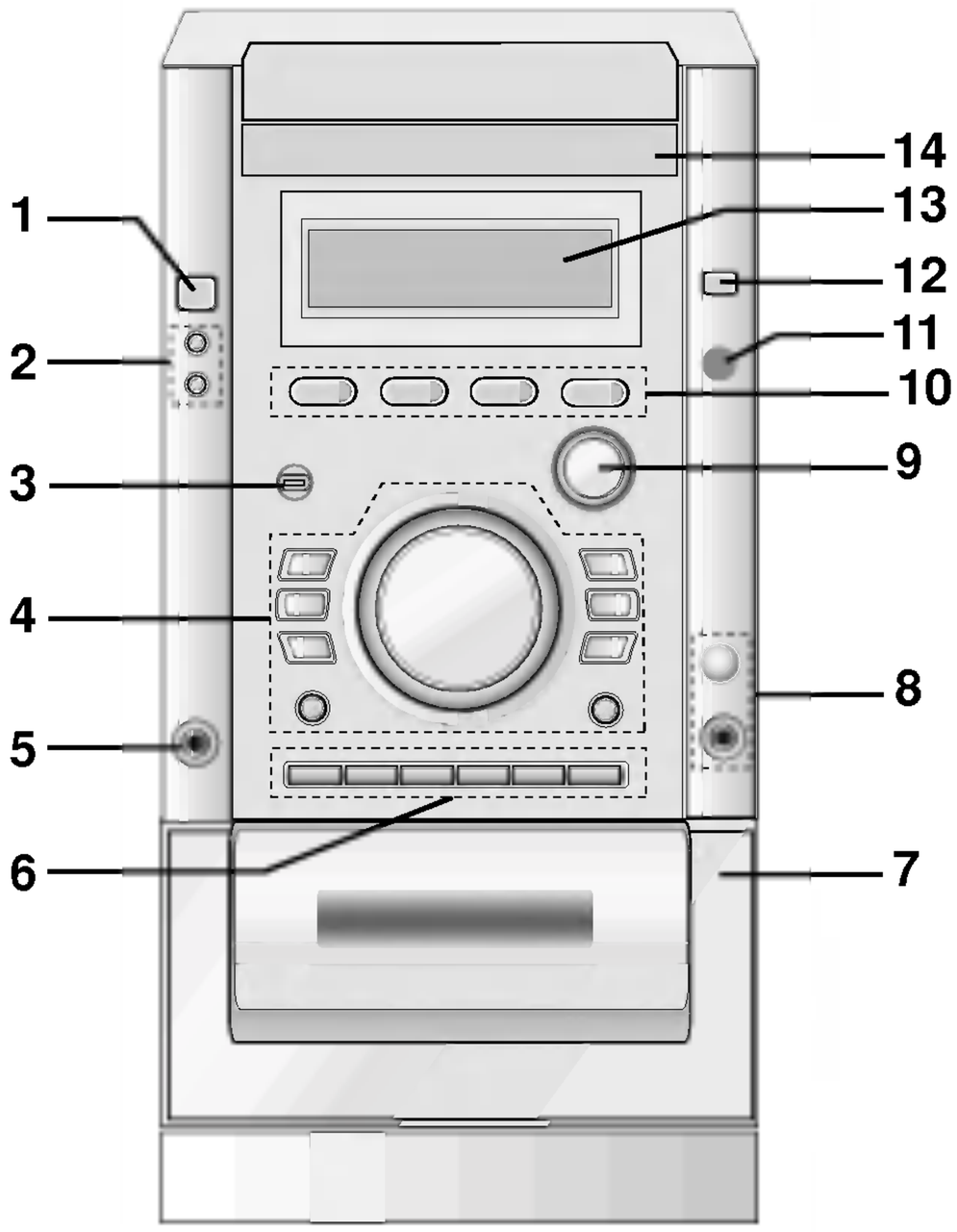

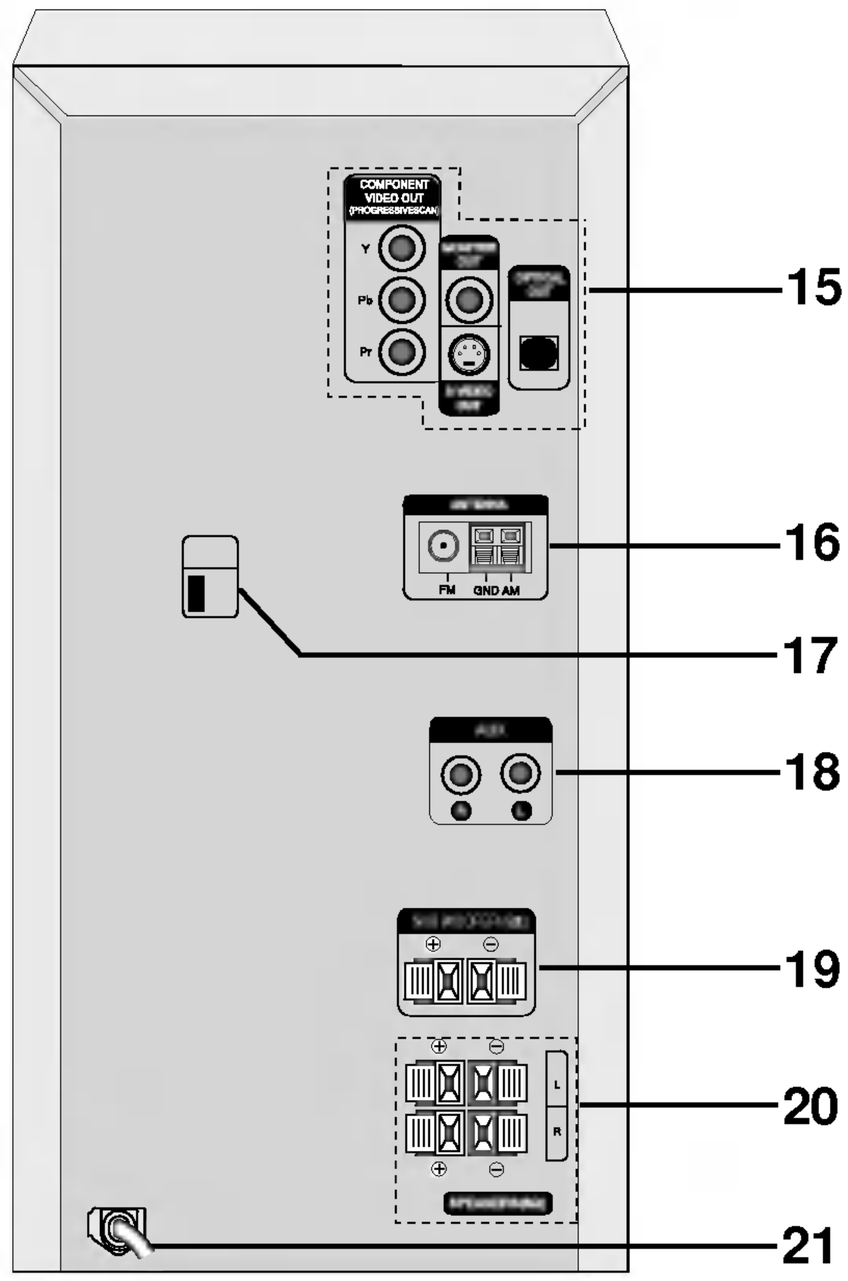

1. POWER (⏻ STANDBY/ON) button
2. • CLOCK button
   • TIMER button
3. XDSS button
4. • VOLUME knob
   • PRESET (-/+) buttons
   • TAPE REVERSE PLAY (◀) button
   • PLAY (▶) button
   • CD SKIP (|◀◀ ◀◀/▶▶ ▶▶|) , TAPE REWIND/ FAST FORWARD (|◀◀ ◀◀/▶▶ ▶▶|) buttons
   • TUNING (-/+) buttons
   • CD PAUSE (II)/STEP button
   • STOP (■)/CLEAR button
   • OAO button
   • RECORD/ RECORD PAUSE (●REC/II) button
5. HEADPHONE SOCKET (🎧 PHONES) -∅3.5mm
6. • EQUALIZER (EQ) button
   • PLAY MODE button
   • SET/COUNT. RESET/RDS (OPTIONAL) button
   • CD SYNCHRO RECORDING (CD SYNC.) button
   • MODE/RIF button
   • PROGRAM/MEMORY button
7. ⏏ PUSH EJECT position
8. • MIC VOLUME KNOB (MIC VOL.) : OPTIONAL
   • MIC JACKS (MIC) : OPTIONAL
9. WOOFER LEVEL knob
10. FUNCTION SELECT buttons (TUNER/BAND, DVD/CD, TAPE, AUX)
11. REMOTE SENSOR
12. OPEN/CLOSE (⏏) button
13. DISPLAY WINDOW
14. CD TRAY
15. • COMPONENT VIDEO OUT/ PROGRESSIVE SCAN (Y Pb Pr) Connector
    • MONITOR OUT Connector
    • S-VIDEO OUT Connector
    • OPTICAL OUT Connector
16. FM/AM ANTENNA Connector
17. VOLTAGE SELECTOR : OPTIONAL
18. AUX INPUT (L/R)
19. SUB WOOFER OUTPUT
20. SPEAKER Connector
21. POWER CORD

Remote Control

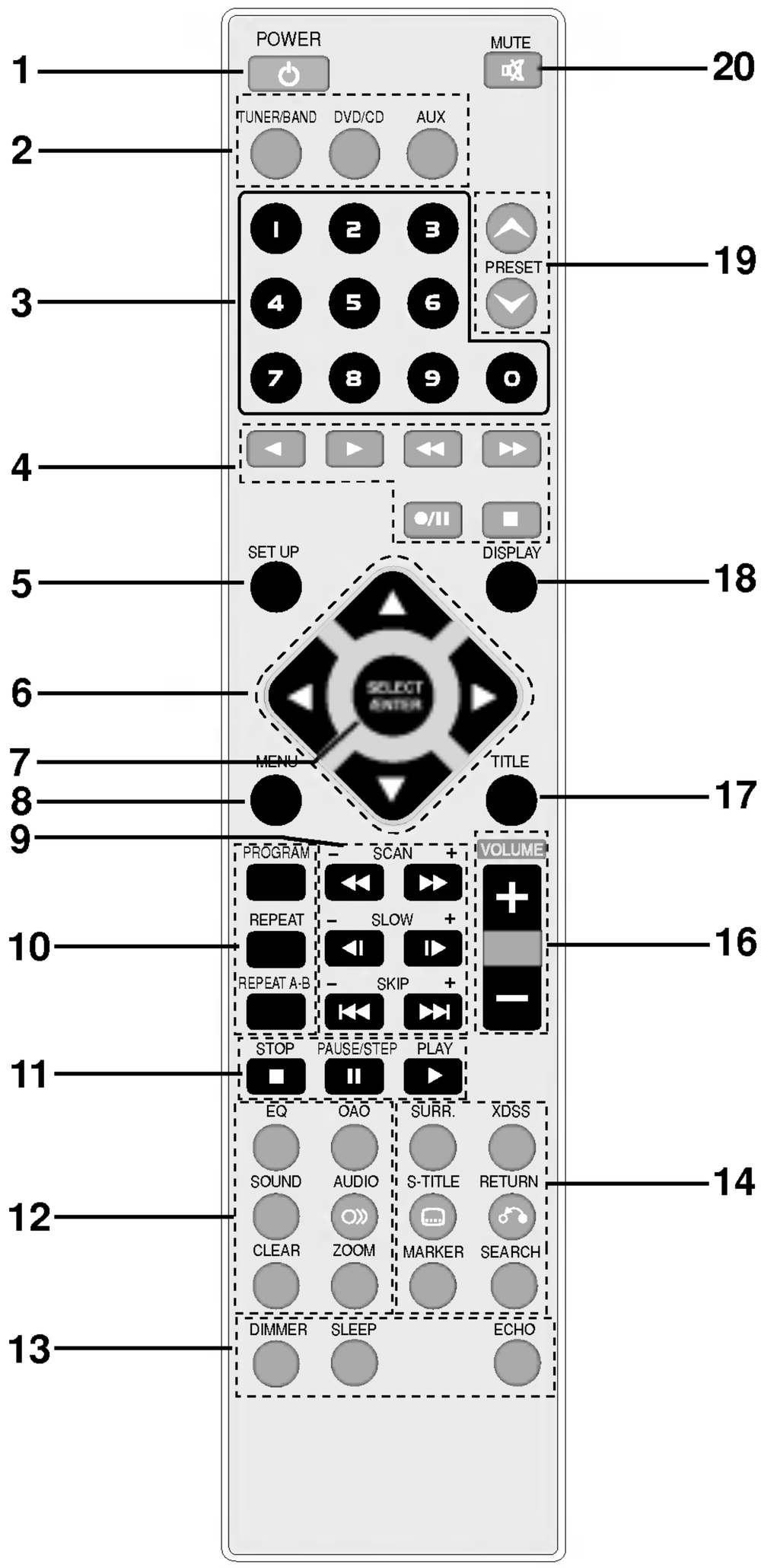

1. POWER button
2. FUNCTION SELECT buttons
   (TUNER/BAND, DVD/CD, AUX)
3. NUMERIC buttons (0-9)
4. TAPE FUNCTION buttons
   - REVERSE PLAY (◀: optional)
   - PLAY (▶)
   - REWIND/ FAST FORWARD PLAY (◀◀/▶▶)
   - RECORD/ RECORD PAUSE (●/II)
   - TAPE STOP (■)
5. SET UP button
6. ARROW buttons
   (For use in highlighting a selection on a GUI menu screen, TITLE and MENU screen.)
7. SELECT/ENTER button
8. MENU button
   (Use the MENU button to display the menu screen included on DVD video discs.)
9. SCAN (◀◀/▶▶)/ SLOW (◀I/I▶)/SKIP (I◀◀/▶▶I) buttons
10. PROGRAM/ REPEAT/ REPEAT A-B buttons
11. STOP (■), PAUSE/STEP, PLAY (▶) buttons
12. EQUALIZER (EQ)/ OAO/ SOUND/ AUDIO/ CLEAR / ZOOM buttons
13. DIMMER/ SLEEP/ ECHO buttons
14. SURROUND (SURR.)/ XDSS/ SUBTITLE (S-TITLE) RETURN / MARKER/ SEARCH buttons
16. VOLUME -/+ buttons
17. TITLE button
    (Use the TITLE button to display the title screen included on DVD video discs.)
18. DISPLAY button
19. PRESET (⌄/⌃) buttons
20. MUTE button

Remote Control Operation Range

Point the remote control at the remote sensor and press the buttons.

- **Distance:** About 23 ft (7 m) from the front of the remote sensor
- **Angle:** About 30° in each direction of the front of the remote sensor

Remote control battery installation

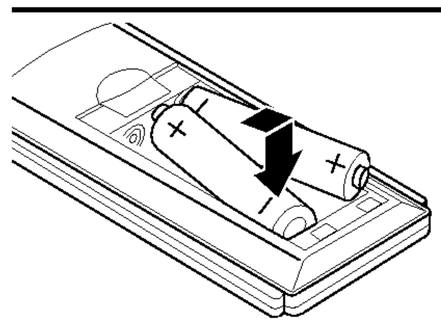

Detach the battery cover on the rear of the remote control, and insert two R03 (size AAA) batteries with ⊕ and ⊖ aligned correctly.

⚠ **Caution**

Do not mix old and new batteries. Never mix different types of batteries (standard, alkaline, etc.).

Connecting to a TV

- Make one of the following connections, depending on the capabilities of your existing equipment.

Tips

- Depending on your TV and other equipment you wish to connect, there are various ways you could connect the unit. Use one of the connections described below.
- Please refer to the manuals of your TV, VCR, Stereo System or other devices as necessary to make the best connections.

Caution

– Make sure the unit is connected directly to the TV. Select the correct AV input on your TV.
– Do not connect your unit to TV via your VCR. The DVD image could be distorted by the copy protection system.

Video connection

Connect the MONITOR OUT jack from the unit to the VIDEO IN jack on the TV using the video cable supplied **(V)**.

S-Video connection

Connect the S-VIDEO OUT jack on the unit to the S-VIDEO IN jack on the TV using the S-Video cable **(S)**.

Component Video (Color Stream®) connection

Connect the COMPONENT VIDEO OUT/ PROGRESSIVE SCAN jacks from the unit to the corresponding in jacks on the TV using an Y Pb Pr cable **(C)**.

Progressive Scan (ColorStream® pro) connection

- If your television is a high-definition or "digital ready" television, you may take advantage of the units progressive scan output for the highest video resolution possible.
- If your TV does not accept the Progressive Scan format, the picture will appear scrambled if you try Progressive Scan on the unit.

Connect the COMPONENT VIDEO/ PROGRESSIVE SCAN jacks from the unit to the corresponding in jacks on the TV using an optional Y Pb Pr cable **(C)**.

Note

– Set the Progressive to "On" on the Setup menu for progressive signal, see page 17.

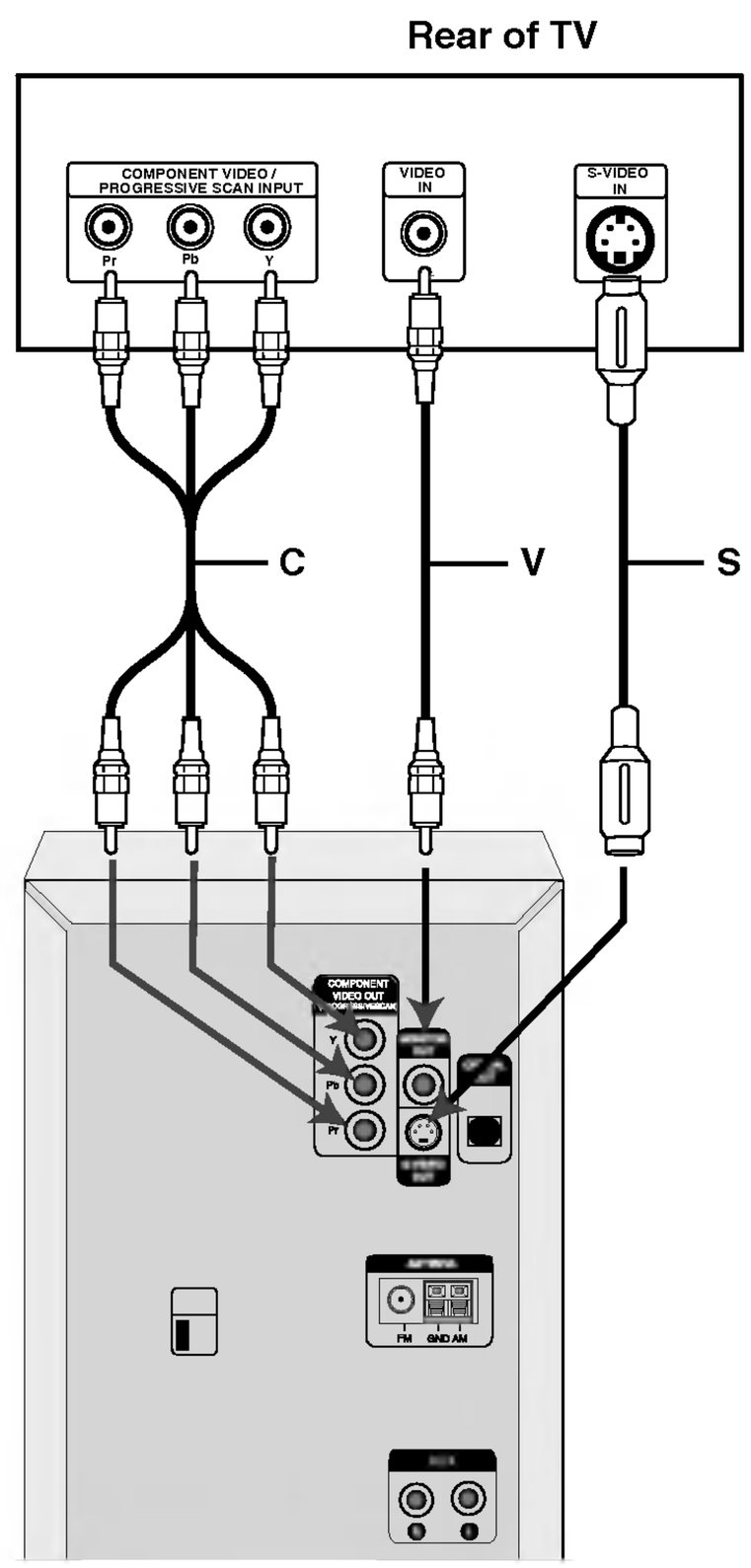

Connecting to Antenna

Connect the supplied FM/AM antennas for listening to the radio.
- Connect the AM loop antenna to the AM antenna connector.
- Connect the FM wire antenna to the FM antenna connector.

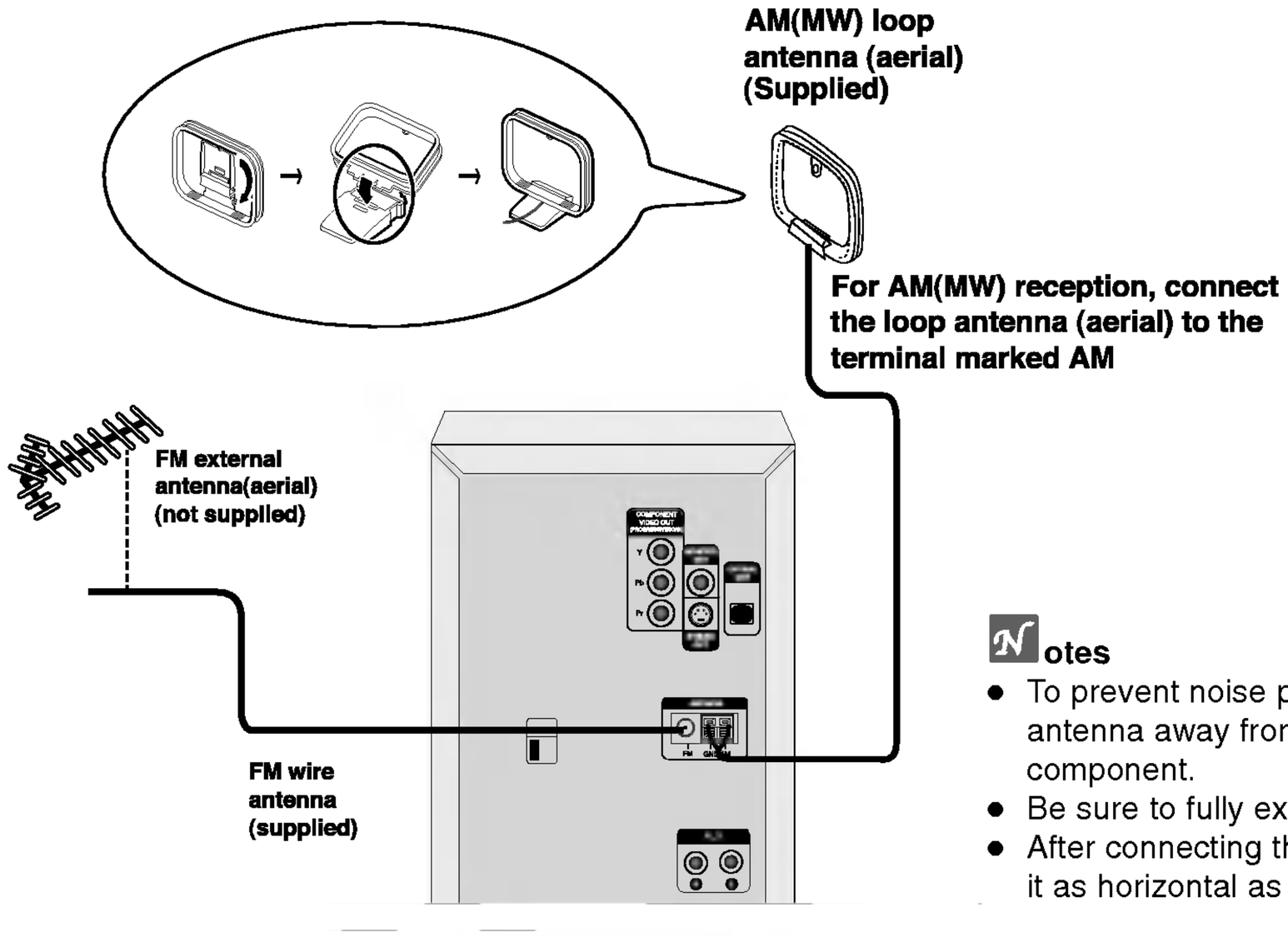

Notes
- To prevent noise pickup, keep the AM loop antenna away from the unit and other component.
- Be sure to fully extend the FM wire antenna.
- After connecting the FM wire antenna, keep it as horizontal as possible.

Speaker System Connection

Connect the speaker cords to the speaker connector.

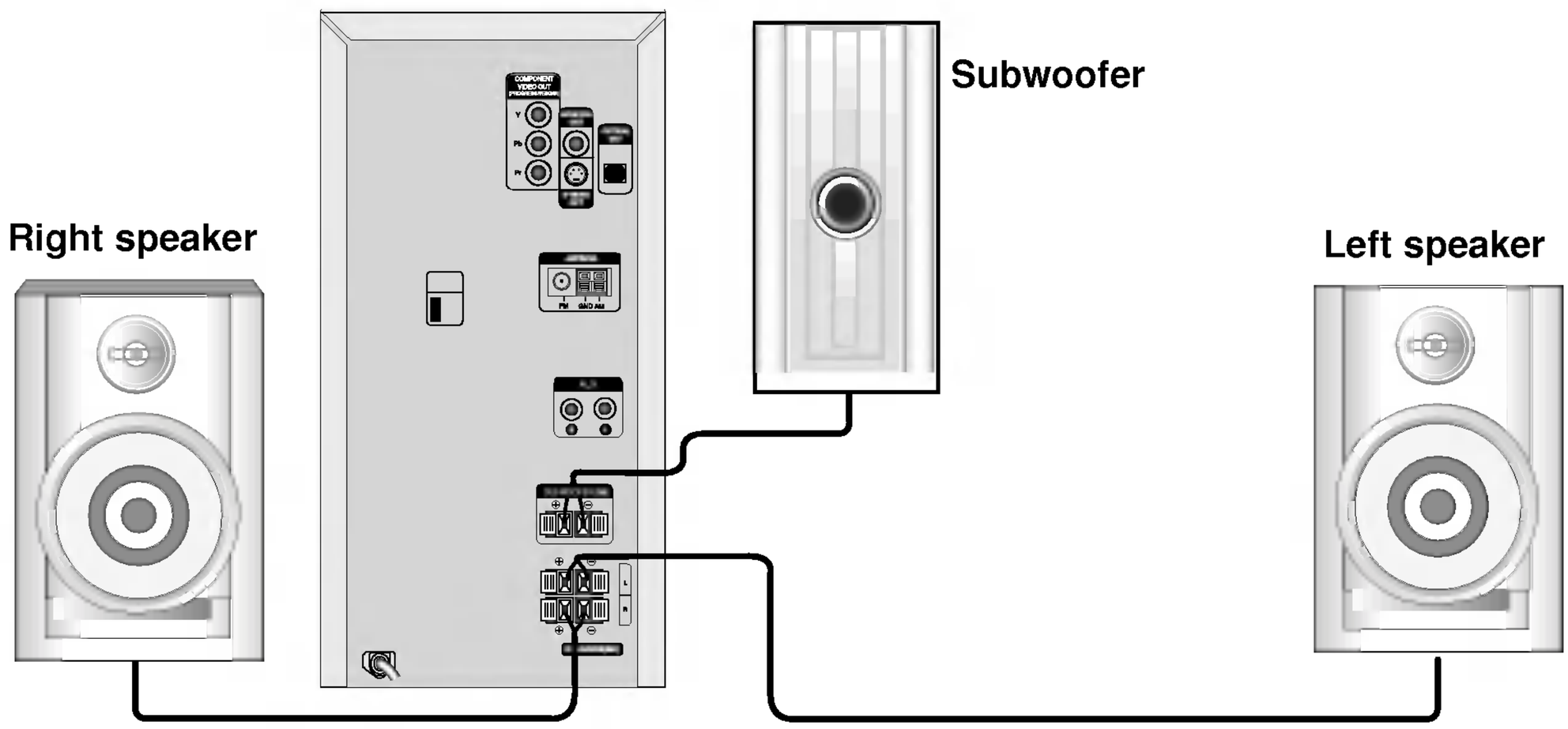

Notes
- Be sure to match the speaker cord to the appropriate terminal on the components: + to + and – to –. If the cords are reversed, the sound will be distorted and will lack base.
- If you use front speakers with low maximum input rating, adjust the volume carefully to avoid excessive output on the speakers.
- Do not disassemble the front cover of supplied speaker.

Connecting to Auxiliary Equipment

You can use VCR or other unit connected to the AUX connector.

1 Connect a VCR or auxiliary device, etc to the AUX connector.

2 Select AUX function pressing the AUX button on the unit or the remote control.

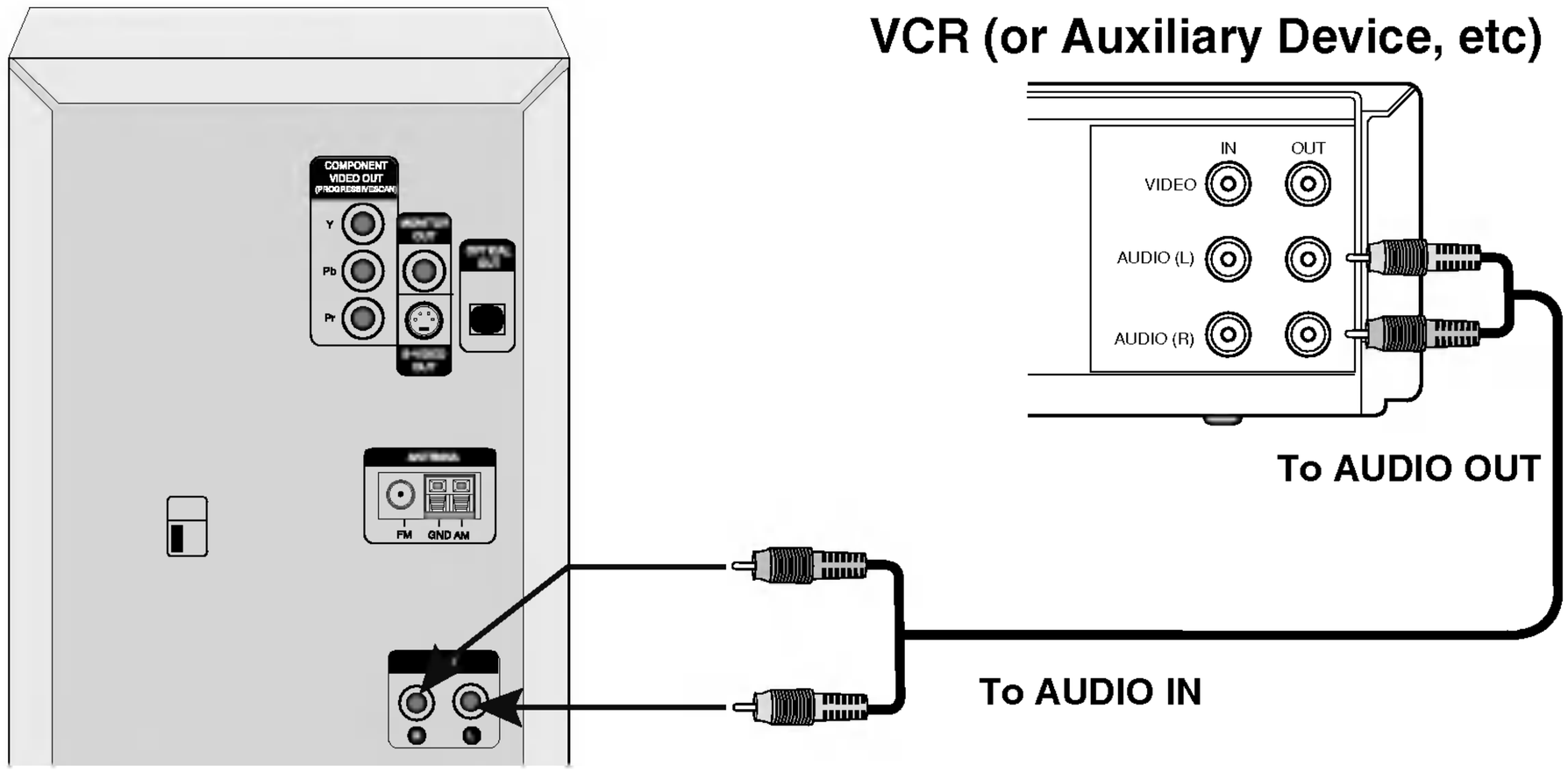

Connecting to Optional Equipment

Connecting to an amplifier equipped with two channel digital stereo (PCM) or to an Audio/ Video receiver equipped with a multi-channel decoder (Dolby Digital™ or MPEG 2)

Connect the OPTICAL OUT connector of this unit to the corresponding in jack on your Amplifier or Receiver.

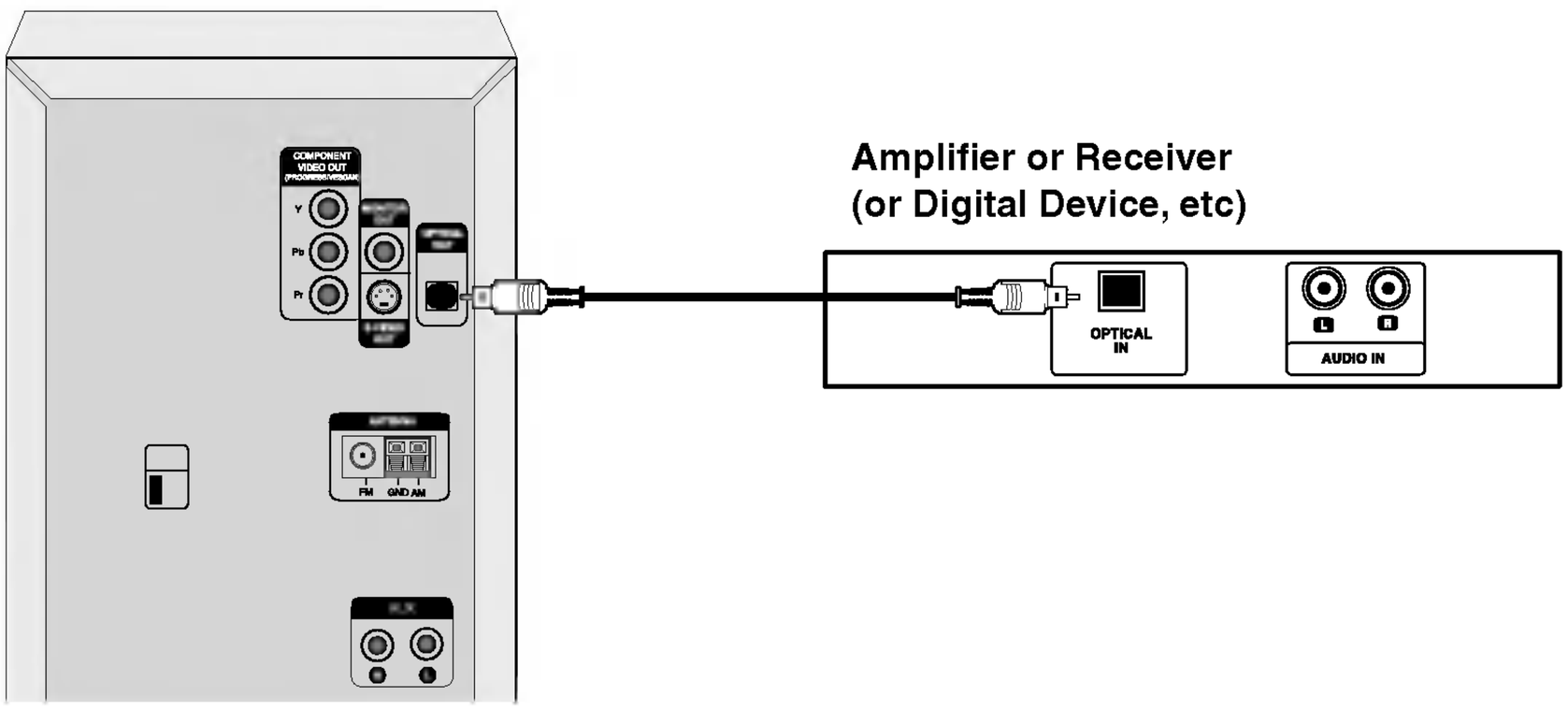

Note

If the audio format of the digital output does not match the capabilities of your unit, the receiver will produce a strong, distorted sound or no sound at all.

Volume Adjustment

- Turn VOLUME knob clockwise to increase the sound level, or counterclockwise to decrease it.
- Use VOLUME + to increase the sound level, or use VOLUME - to decrease it on the remote control.

Sub woofer level Adjustment

Turn WOOFER LEVEL knob clockwise to increase the sound level on the front panel, or counterclockwise to decrease it.

MUTE

Press MUTE to turn off the sound, press again to restore.
You can mute your unit in order, for example, to answer the telephone, 🔇 flashes in the display window.

Sound Quality Adjustment

- **To activate stereo sound**
  You can choose between 4 fixed sound impressions. Select a desired sound mode using the EQUALIZER (EQ).
  FLAT : Linear frequency response
  ROCK : More bass, more treble
  POP : Less bass, less treble
  CLASSIC : For orchestral music
- **Headphone Jack**
  Connect a stereo headphone plug (ø3.5mm) into the headphone jack.
  The speakers are automatically disconnected when you plug in the headphones (not supplied).

SURROUND

To activate surround mode
Press SURROUND (SURR.) to reinforce surround effect.
SURROUND ON ↔ SURROUND OFF

XDSS (Extreme Dynamic Sound System)

Press XDSS to reinforce treble and bass.
- The “XDSS ON” indicator lights up.
To cancel it press XDSS again.
- The “XDSS OFF” indicator lights up.

OAO (Orientation Acoustic Optimizer) ON/OFF

Press OAO to reinforce the bass sound.
The “OAO ON” or “OAO OFF” indicator lights. To cancel, press OAO again.

DIMMER

This function is darken the display window by half in power-on status. Press **DIMMER** on the remote control.
To cancel it press the button again.

Setting the Clock

1 Press CLOCK.
(If the clock requires setting, press and hold CLOCK for more than 2 seconds.)
- The hours display begins to blink.

2 Select either the 12 hour cycle or the 24 hour cycle by PRESET (-/+) on the front panel.

AM 12:00 (12HR) or 0:00 (24HR)

3 Press SET to confirm the selected hour cycle.

4 Use PRESET (-/+) to set the current hour.

5 Press SET.

6 Use PRESET (-/+) to set current minutes.

7 Press SET and the correct time is shown on the display.

8 Press CLOCK at any time to show the time on the display, for about 5 seconds.

Sleep Timer Function

When the sleep timer is set, the unit automatically turns off after the specified time has elapsed.

1 To specify the time delay before the power is turned off, press SLEEP.
In the display window you can see *SLEEP 180* for about 5 seconds. This means that the system turns off automatically after 180 minutes.

2 Each time you press SLEEP the setting changes in the following order.
SLEEP 180 →150 → 120 →90→80→70 → 60→ 50 → 40 → 30 → 20 →10 → OFF→SLEEP 180...

3 To check the remaining time until the power is turned off.
While the sleep function is active press **SLEEP** briefly. The time remaining until the unit turns off is displayed for about 5 seconds.

Note
If you press **SLEEP** while the sleep time is displayed, the SLEEP time is reset.

To cancel Sleep Timer setting

If you wish to stop the function, press the **SLEEP** button repeatedly until "*SLEEP 10*" appears, and then press **SLEEP** once again after "*SLEEP 10*" shows on the display window.

Using Microphone (OPTIONAL)

You can sing to a music source by connecting a microphone to the unit.

1 Connect your microphone to the MIC socket.
"ECHO-OFF" will be shown in the display window.

2 Play a music you want.

3 Sing along with the accompaniment.
Adjust the microphone volume by turning MIC VOLUME KNOB.

For your reference
You can record during using microphone.
Refer to the "Recording" explanation section.
(See page 22.)

Notes
- When not using the microphone, set the MIC volume knob to minimum or turn off the MIC and remove the microphone from the MIC socket.
- If the microphone is set too near the speaker, a howling sound may be produced. In this case, move the microphone away from the speaker or decrease the sound level by using the MIC volume control.
- If sound through the microphone is extremely loud, it may be distorted. In this case, turn the MIC volume control toward minimum.

To Adjust ECHO Volume

You can give an echo effect to the sound from the microphones.

Press the ECHO repeatedly.

ECHO - OFF → ECHO - 1 → ECHO - 2

Timer Function

With the TIMER function you can have the radio reception and recording, CD or tape playing turned on and off at the time desired.

1 Press CLOCK to check the current time.

For your reference
If you don't set clock, timer function doesn't work.

2 Press TIMER to enter the timer setting mode.
TUNER-CD-TAPE flash in the display window in turn.

For your reference
If you want to correct the previous memorized TIMER setting, press and hold the TIMER button more than 2 seconds.
- The previous memorized timer setting for on Time and "◷" indicators appear in the display.

3 Press SET when the desired function flashes.

4 1. a. When you select TUNER function, 'PLAY' and 'REC' indicator flash in the display window alternately for about 3 seconds.
'PLAY' indicator : TUNER play only
'REC' indicator : TUNER play and recording
b. Press SET when the desired function flashes.
c. Select the previous memorized preset number with PRESET (-/+) on the front panel and press SET.
'ON TIME' indicator appears for about 0.5 seconds in the display window and then disappears.
2. When you select CD or TAPE function,
'ON TIME' indicator appears for about 0.5 seconds in the display window and then disappears.

5 Set the turn on hour pressing PRESET (-/+).

6 Press SET to confirm the turn on hour time.

7 Set the turn on minutes time pressing PRESET (-/+).

8 Press SET to confirm the turn on minutes time.
'OFF TIME' indicator appears for about 0.5 seconds in the display window and then disappears .

9 Set the turn off hour time pressing PRESET (-/+).

10 Press SET.

11 Set the turn off minutes pressing PRESET (-/+).

12 Press SET.

13 Adjust the volume level pressing PRESET (-/+).

14 Press SET.
"◷" appear in the display window and the timer setting has been completed.

15 Turn the system off.
The selected timer functions are automatically switched on and off at the preset times.

To cancel or check the timer

Each time the TIMER button is pressed you can select the timer set or cancel. You can also check the timer setting status.
To activate or check the timer, press the **TIMER** button repeatedly so that "◷" appears in the display window.
To cancel the TIMER, press the **TIMER** button repeatedly so that "◷" disappears from the display window.

Note
If the disc is inserted the DVD,VCD or MP3 except audio CD on the unit, the timer function plays to the TUNER.

Mini Glossary for Audio Stream & Surround mode

DIGITAL

The Dolby Digital surround format lets you enjoy up to 5.1 channels of digital surround sound from a Dolby Digital program source. If you play DVDs with " " mark, you can enjoy even better sound quality, greater spatial accuracy, and improved dynamic range.
Manufactured under license from Dolby Laboratories.
"Dolby", "Pro Logic" and double-D symbol are trademarks of Dolby Laboratories.

BYPASS

Outputs the sound from the front left and right speakers and subwoofer.

Sound Mode DVD VCD CD

You can enjoy surround sound simply by selecting one of the pre-programmed sound fields according to the program you want to listen to.

When DVD is inserted

You can change the Digital Audio Output mode by pressing the **AUDIO** button on the remote control during playback.
Each time you press SOUND button, the "BYPASS" indicator will only be shown on the display window.

When Video CD is inserted

Each time you press SOUND button, the sound mode of Video CD is changed on the display window as the following order.

BYPASS → STUDIO → CLUB → HALL → THEATER 1 → CHURCH → BYPASS...

Note

After you select the "Bypass" of sound mode by pressing SOUND button, press AUDIO button.
The Left, Right and Stereo of audio channel will be displayed on the TV screen.

When CD is inserted

Each time you press SOUND button, the sound mode of Audio CD is changed on the display window as the following order.

BYPASS → STUDIO → CLUB → HALL → THEATER 1 → CHURCH → BYPASS...

For your reference

- **The unit memorizes the last mode settings for each source individually.**
- **You can identify the encoding format of program software by looking at its packaging.**
  - Dolby Digital discs are labelled with the logo.
  - Dolby Surround encoded programs are labelled with the logo.

Note

When you play sound tracks with 96kHz sampling frequency, the output signals will be converted to 48kHz (sampling frequency).

⚠ **Caution:**
Before using the remote control, press the **DVD/CD** button to select the device to be operated.

General Explanation

This manual gives basic instructions for operating the unit. Some DVDs require specific operation or allow only limited operation during playback.
When this occurs, the symbol ✋ appears on the TV screen, indicating that the operation is not permitted by the unit or is not available on the disc.

On-Screen Display

General playback status can be displayed on the TV screen. Some items can be changed on the menu.

On-screen display operation

1 **Press DISPLAY during playback.**

2 **Press ▲ / ▼ to select an item.**
The selected item will be highlighted.

3 **Press ◀ or ▶ to change the setting of an item.**
The number buttons can be also be used for setting numbers (e.g., title number). For some functions, press SELECT/ENTER to execute the setting.

Temporary Feedback Field Icons

Title	Repeat title
A-B	Repeat sequence
■■	Resume play from this point
✋	Action prohibited or not available

Notes
- Some discs may not provide all of the features on the on-screen display example shown below.
- If no button is pressed for 10 seconds, the on-screen display disappears.

Example: On-Screen Display during playing DVD

Items		Function / Action using ▲ / ▼ to select item	Selection Method
Title Number	◀ 1 / 3 ▶	Shows the current title number and total number of titles / skips to the desired title number.	◀/▶, Numbers, or SELECT/ENTER
Chapter Number	◀ 1 / 12 ▶	Shows the current chapter number and total number of chapters / skips to the desired chapter number.	◀/▶, Numbers, or SELECT/ENTER
Time search	0:20:09	Shows the elapsed playing time / searches by elapsed time.	Numbers, SELECT/ENTER
Audio language and Digital Audio Output mode	◀ 1 ENG DDD ▶ 5.1 CH	Shows the current audio soundtrack language, encoding method, and channel number / changes the setting.	◀/▶ or AUDIO
Subtitle language	◀ 1 ENG ▶	Shows the current subtitle language / changes the setting.	◀/▶ or SUBTITLE
Angle	◀ 1 / 3 ▶	Shows the current angle number and total number of angles / changes the angle.	◀/▶
Sound	◀ Bypass ▶	Shows the current sound mode / changes the setting.	◀/▶ or SOUND

Example: On-Screen Display during playing VCD

Items		Function / Action using ▲ / ▼ to select item	Selection Method
Track Number	◀ 1 / 3 ▶	Shows the current track number, total number of tracks and PBC On mode / skips to the desired track number.	◀/▶, Numbers, or SELECT/ENTER
Time	0:20:09	Shows the elapsed playing time (display only).	Numbers, SELECT/ENTER
Audio Channel	◀ Stereo ▶	Shows the audio channel / changes the audio channel.	◀/▶ or AUDIO
Sound	◀ Bypass ▶	Shows the current sound mode / changes the setting.	◀/▶ or SOUND

Initial Settings

By using the Setup menu, you can make various adjustments to items such as picture and sound. You can also set a language for the subtitles and the Setup menu, among other things. For details on each Setup menu item, see pages 16 to 19.

To display and exit the Menu:
Press SETUP to display the menu. A second press of SETUP will take you back to initial screen.
To go to the next level:
Press ▶ on the remote control.
To go back to the previous level:
Press ◀ on the remote control.

General Operation

1 **Press SETUP.**
The setup menu appears.

2 **Use ▲ / ▼ to select the desired option then press ▶ to move to the second level.**
The screen will be shown the current setting for the selected item, as well as alternate setting(s).

3 **Use ▲ / ▼ to select the second desired option then press ▶ to move to the third level.**

4 **Use ▲ / ▼ to select the desired setting then press SELECT/ENTER to confirm your selection.**
Some items require additional steps.

5 **Press SETUP or PLAY to exit the setup menu.**

LANGUAGE

OSD

Select a language for the Setup menu and on-screen display.

Disc Audio / Subtitle / Menu DVD

Select the language you prefer for the audio track (disc audio), subtitles, and the disc menu.

Original: Refers to the original language in which the disc was recorded.

Other: To select another language, press number buttons to enter the corresponding 4-digit number according to the language code list on page 32. If you enter the wrong language code, press CLEAR on the remote control.

DISPLAY

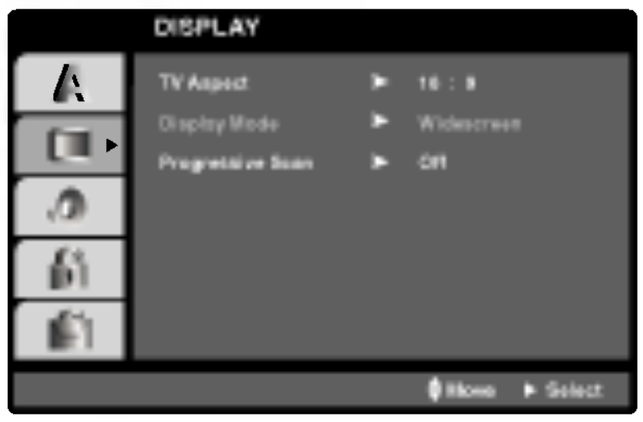

TV Aspect DVD

4:3: Select when a standard 4:3 TV is connected.
16:9: Select when a 16:9 wide TV is connected.

Display Mode DVD

Display Mode setting works only when the TV Aspect mode is set to “4:3”.

Letterbox: Displays a wide picture with bands on the upper and lower portions of the screen.

Panscan: Automatically displays the wide picture on the entire screen and cuts off the portions that do not fit.

Progressive Scan DVD

Progressive Scan Video provides the highest quality pictures with less flickering.
If you are using the Component Video jacks for connection to a TV or monitor that is compatible with a progressive scan signal, set Progressive Scan to On.

To Turn ON progressive scan:

Connect component out of the DVD to the input of your monitor/television, set your television or monitor to Component Input.

1. Select “Progressive Scan” on the DISPLAY menu then press ▶.
2. Select “On” using the ▲ / ▼ buttons.
3. Press SELECT/ENTER to confirm your selection. The confirm menu will appear.

4. When the confirm menu appears on your screen Cancel is highlighted as default. Use the ◀ / ▶ buttons to highlight “ENTER”.
5. Pressing ENTER will set the player to Progressive scan mode.

⚠Caution

Once the setting for progressive scan output is entered, an image will only be visible on a progressive scan compatible TV or monitor. If you set Progressive Scan to On in error, you must reset the unit.

1) Remove any disc from the unit and close the disc tray. See that “NO DISC” is displayed on the display window
2) Press and hold STOP (■) for five seconds then release it. The video output will be restored to the standard setting, and a picture will once again be visible on a conventional analog TV or monitor.

AUDIO

Each DVD disc has a variety of audio output options. Set the player's AUDIO options according to the type of audio system you use.

Dolby Digital / DTS / MPEG DVD

Bitstream: Select "Bitstream" if you connect the DVD Player's DIGITAL OUT jack to an amplifier or other equipment with a Dolby Digital or MPEG decoder.

PCM : Select when connected to a two-channel digital stereo amplifier. DVDs encoded in Dolby Digital or MPEG will be automatically downmixed to two-channel PCM audio.

Sample Freq. (Frequency) DVD

If your receiver or amplifier is NOT capable of handling 96 kHz signals, select 48 kHz. When this choice is made, this unit automatically converts any 96 kHz signals to 48 kHz so your system can decode them.

If your receiver or amplifier is capable of handling 96 kHz signals, select 96 kHz. When this choice is made, this unit passes each type of signal through without any further processing.
Check the documentation for your amplifier to verify its capabilities.

Dynamic Range Control (DRC) DVD

With the DVD format, you can hear a program's sound track in the most accurate and realistic presentation possible, thanks to digital audio technology. However, you may wish to compress the dynamic range of the audio output (the difference between the loudest sounds and the quietest ones). This allows you to listen to a movie at a lower volume without losing clarity of sound. Set DRC to On for this effect.

Vocal

Set Vocal to On only when a multi-channel Karaoke DVD is playing. The karaoke channels on the disc will mix into a normal stereo sound.

OTHERS

PBC VCD

Set Playback Control (PBC) to On or Off.

On:Video CDs with PBC are played according to the PBC.

Off:Video CDs with PBC are played the same way as Audio CDs.

DivX(R) Registration DivX

You can show the DivX DRM (Digital Right Management) Registration code for your unit only.

The Registration code is used for VOD (Video-On-Demand) service agent. You can purchase or rental an encrypt movie file.

Notes

If you rent the DivX VOD file, it has several options of viewing limits as show below.

- Display the number which you can watch the file.

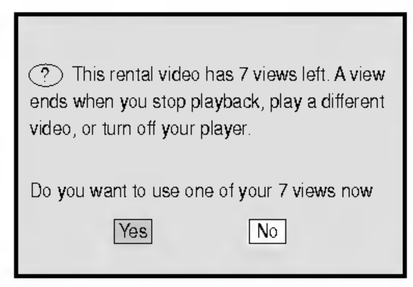

- The rental has been expired.

- Display the authorization error.

LOCK (Parental Control)

Rating DVD

Some movies contain scenes that may not be suitable for children to view. Many of these discs contain parental control information that applies to the complete disc or to certain scenes on the disc. Movies and scenes are rated from 1 to 8, depending on the country. Some discs offer more suitable scenes as an alternative.

The parental control feature allows you to block access to scenes below the rating you input, thereby preventing your children from being able to view material you believe is unsuitable.

1 **Select "Rating" on the LOCK menu then press ▶.**

2 **To access the Rating, Password and Country Code features, you must input the 4-digit security code you created.**
If you have not yet entered a security code you are prompted to do so.

Input a 4-digit code and press SELECT/ENTER. Enter it again and press SELECT/ENTER to verify. If you make a mistake before pressing SELECT/ENTER, press CLEAR.

3 **Select a rating from 1 to 8 using the ▲ / ▼ buttons.**
Rating 1-8: Rating one (1) has the most restrictions and rating eight (8) is the least restrictive.

Unlock
If you select unlock, parental control is not active and the disc plays in full.

Note

If you set a rating for the player, all disc scenes with the same rating or lower are played. Higher rated scenes are not played unless an alternate scene is available on the disc. The alternative must have the same rating or a lower one. If no suitable alternative is found, playback stops. You must enter the 4-digit password or change the rating level in order to play the disc.

4 **Press SELECT/ENTER to confirm your rating selection, then press SETUP to exit the menu.**

Password (Security Code)

You can enter or change password.

1 Select Password on the LOCK menu then press ▶.
2 Follow step 2 as shown left (Rating). "Change" or "New" is highlighted.
3 Enter the new 4-digit code, then press SELECT/ENTER. Input it again to verify.
4 Press SETUP to exit the menu.

If you forget your Security Code

If you forget your security code you can clear it using the following steps:

1 Input the 6-digit number "210499" on the setup menu and the security code is cleared.
2 Enter a new code as described above.

Note

When " INPUT PASSWD ■■■■ " appears on the TV screen, press STOP (■) and then press SETUP to move to the setup menu.

Country Code DVD

Enter the code of the country/area whose standards were used to rate the DVD video disc, based on the list in the reference chapter. (See page 33.)

1 **Select "Country Code" on the LOCK menu then press ▶.**

2 **Follow step 2 as shown left (Rating).**

3 **Select the first character using ▲ / ▼ buttons.**

4 **Shift the cursor using ▶ button and select the second character using ▲ / ▼ buttons.**

5 **Press SELECT/ENTER to confirm your country code selection.**

Presetting the radio stations

You can preset 50 stations for FM and AM.
Before tuning, make sure that you have turned the volume down to the minimum level.

1 **Press TUNER/BAND to show either FM or AM in the display window.**
Every time you press this button, AM and FM changes alternately.

2 **Press TUNING (-/+) on the front panel until the frequency indication starts to change.**

Notes

- **Automatic Tuning**
  Press the TUNING (-/+) for more than 0.5 second.
  - Scanning stops when the unit tunes in a station.
- **Manual Tuning**
  Press the TUNING (-/+) briefly and repeatedly.

3 **Press PROGRAM/MEMORY on the front panel.**
A preset number will flash in the display window.

4 **Press PRESET (-/+) (or PRESET ⌄/⌃ on the remote control) to select the preset number you want.**

5 **Press PROGRAM/MEMORY again.**
The station is stored.

6 **Repeat steps 2 to 5 to store other stations.**

To clear all memorized stations

Press and hold **PROGRAM/MEMORY** on the front panel for about two seconds, "*CLEAR ALL*" appears in the display window and then press CLEAR on the front panel, the stations are cleared.

For your reference
If all stations have already been entered, "*MEM FULL*" message will appear in the display window for a moment and then a preset number will flash. To change the preset number, follow the steps 4-5.

To recall preset numbers

Press and hold PRESET (-/+) (or PRESET ⌄/⌃ on the remote control) until the desired preset number appears or press the button repeatedly.

Listening to the radio

1 **Press TUNER/BAND to select either AM or FM in the display window.**
The last received station is tuned in.

2 **Press PRESET (-/+) (or PRESET ⌄/⌃ on the remote control) repeatedly to select the preset station you want.**
Each time you press this button, the unit tunes in the next preset station.

3 **Adjust the volume by rotating VOLUME knob (or pressing VOLUME -/+ on the remote control) repeatedly.**

To listen to non-preset radio stations

- For manual tuning, see "Manual Tuning".
- For automatic tuning, see "Automatic Tuning".

To turn the radio off

Press POWER to turn off the unit or to select another function mode (TAPE, DVD/CD or AUX).

For your reference

- **If a FM program is noisy**
  Press MODE/RIF repeatedly so that "ST" disappears in the display window. There will be no stereo effect, but the reception will improve. Press MODE/RIF again to restore the stereo effect.
- **To improve reception**
  Reposition the supplied antennas.

Notes

- Use MODE/RIF (Radio Interference Filter) function to switch to Mono reception if stereo reception is distorted by noise.
- While recording weak AM broadcasts, if noises occurs, press MODE/RIF once.

RDS Function - OPTIONAL

About RDS

This unit is equipped with RDS (Radio Data System), which brings a wide range of information from FM radio. RDS is a system for transmitting station call signs or network information, a description of station programme type text message about the station or specifics of musical selection and the correct time.

RDS Tuning

When a FM station containg RDS data is tuned in, the unit will automatically display the station's call sign and the RDS indicator will light in the Display Window as well as indicators for the programme type recognition (PTY), Radio Text (RT), Clock Time (CT) and RDS services programme (PS) if transmitted by the station.

RDS Display Options

The RDS system is capable of transmitting a wide variety of information in addition to the initial call sign that appears when a station is first tuned. In normal RDS operation the display will indicate the station name, broadcast network or call letters. Pressing **RDS** on the front panel enables you to cycle through the various data types in the sequence:

(PS → FREQUENCY → PTY → RT → CT)

- **PTY (Programme type recognition)-** The programme type is shown on the display window.
- **RT (Radio text recognition)-** The radio station's name is displayed on the display window.
- **CT (Time controlled by the channel)-** Enable the unit to receive the actual time and show it on the display window.
- **PS (Programme Service name)-** The programme title is displayed on the display window.

Notes

- Some RDS stations may not choose to include some of these additional features. If the data required for the selected mode is not being transmitted, the Display Window will show a **PTY NONE, RT NONE, CT NONE, PS NONE** message.

Programme Search (PTY)

A major benefit of RDS is its ability to encode broadcasts with Programme Type (PTY) codes that indicate the type of material being broadcast. The following list shows the abbreviations used to indicate each PTY along with an explanation of the PTY.

NEWS	News
AFFAIRS	Current Affairs
INFO	Information
SPORT	Sports
EDUCATE	Educational
DRAMA	Drama
CULTURE	Culture
SCIENCE	Science
VARIED	Varied Speech Programme
POP M	Popular Music
ROCK M	Rock Music
EASY M	Easy Listening Music
LIGHT M	Classical Music
CLASSICS	Serious Classical Music
OTHER M	Other Music
WEATHER	Weather Information
FINANCE	Financial Programmes
CHILDREN	Children's Programmes
SOCIAL	Social Affairs Programmes
RELIGION	Religious Broadcasts
PHONE IN	Phone-In Programmes
TRAVEL	Travel and Touring
LEISURE	Leisure and Hobby
JAZZ	Jazz Music
COUNTRY	Country Music
NATION M	National Music
OLDIES	Oldies Music
FOLK M	Folk Music
DOCUMENT	Documentary Programmes
TEST	Station Alarm Test Message
ALARM 1	Emergency Broadcast Information

You may search for a specific Programme Type (PTY) by following these steps:

1. **Press TUNER/BAND to select FM mode.**
2. **Select a desired station by pressing TUNING (-/+).**
   When the RDS transmission is received, the display shows the program service name (PS) after RDS indicator appears.
3. **Press the RDS to select PTY mode.**
4. **To search for a different PTY, press the PRESET (-/+) while the last PTY in use is still displayed to scroll through the list of available PTY types.**
5. **When the PTY is selected, press the TUNING (-/+) within 5 seconds.**
   The unit will go into an automatic search mode and attempt to find the next station with acceptable signal strength that matches the desired PTY type.

Basic Playback

1 Press TAPE to select tape function.
(*"NO TAPE"* appears in the display window.)

2 Open cassette deck by pushing to the ⏏PUSH EJECT position.

3 Insert a cassette with the tape side to the bottom and then close deck.

4 Press ▶(or ◀ : optional) on the front panel or remote control.

AUTO STOP DECK

After auto stop deck plays front side of cassette, the unit stops automatically.

AUTO REVERSE DECK : OPTIONAL

You can select direction of the cassette you want by pressing PLAY MODE.

Pressing	Display	Function
-		After the cassette plays front or reverse (backward play) side, stops automatically.
Once	)	After the cassette plays front and reverse side, stops automatically.
Twice	( )	After the cassette of plays six times repeatedly front and reverse side, stops automatically.

To Stop Play

Press STOP(■)/CLEAR on the front panel or TAPE STOP (■) on the remote control during playback.

Tape Counter Reset

Press COUNTER RESET (COUNT.RESET) during playback.
Playing time appears *"TAPE 0000"* in display window.

To Play Rewind or Fast Forward

After press ⏮ ◀◀/▶▶ ⏭ on the front panel or ◀◀/▶▶ on the remote control during playback or stop, press ▶(or ◀ :optional) at the tape position you want.

Recording from Radio, CD or Auxiliary source

1 Press the function (CD, TUNER/BAND or AUX) you want.

2 Open the cassette deck and insert a blank cassette into the cassette compartment.

To set the recording direction : OPTIONAL
Press PLAY MODE repeatedly to set the recording direction.

3 Press ●REC/II on the front panel or ●/II on the remote control.
"REC" flashes and holds the cassette in pause mode.

4 Press ●REC/II on the front panel or ●/II remote control.
The recording is begun.

To pause the recording
Press **●/II** (or **●REC/II**) during recording .

To stop the recording
Press STOP(■).

CD- Synchro recording

This feature is a convenient to record tracks from CD to cassette.

1 Select the CD function and load a CD to be recorded.
You may wish to program a selection of tracks for recording.

2 Open the cassette deck and insert a blank cassette into the tape tray.

To set the recording direction
Press PLAY MODE repeatedly to set the recording direction.

3 Press CD SYNC. in stop mode.
"REC" flashes and "CD SYNC" displays in the display window.

4 The synchronized recording is started automatically after about 7 seconds.

Notes

- If you wish to record from the desired track, select the desired track with ⏮/⏭ before commencing CD synchro recording.
- A function change is not possible during recording.

Playing a DVD and Video CD

Playback Setup DVD VCD

- Turn on the TV and select the video input source connected to the unit.
- Audio system: Turn on the audio system and select the input source connected to the unit.

1 Press OPEN/CLOSE (⏏) to open the disc tray.

2 Load your chosen disc in the tray, with the playback side facing down.

3 Press OPEN/CLOSE (⏏) to close the tray.
READING appears on the TV screen, and playback starts automatically. If playback does not start, press PLAY.
In some cases, the disc menu might appear instead.

If a menu screen is displayed

The menu screen may be displayed first after loading a DVD or Video CD which offer a menu.

DVD

Use the ▲ / ▼ / ◀ / ▶ buttons to select the title/chapter you want to view, then press SELECT/ ENTER to start. Press TITLE or MENU to return to the menu screen.

VCD

Use the number buttons to select the track you want to view and press RETURN to return to the menu screen. Menu settings and operating procedures may differ. Follow the instructions on the each menu screen. You also may set PBC to Off (See "PBC" on page 18).

Notes

– If parental control is set and the disc is not within the rating settings you must input the password. (See "Lock Menu" on page 19.)

General Features

Note

Unless stated otherwise, all operations described use the remote control. Some features may also be available on the Setup menu.

Moving to another TITLE DVD

When a disc has more than one title, you can move to another title. Press DISPLAY while playback is stopped then the appropriate number (0-9) or use ◀ / ▶ to move to another title.
You can play any title by inputting its number while playback is stopped.

Moving to another CHAPTER/TRACK DVD VCD

When a title on a disc has more than one chapter or a disc has more than one track, you can move to another chapter/track as follows:

- Press ⏮ or ⏭ briefly during playback to select the next chapter/track or to return to the beginning of the current chapter/track.
- Press ⏮ twice briefly to step back to the previous chapter/track.
- To go directly to any chapter during DVD playback, press DISPLAY and press ▲ / ▼ to select the chapter/track icon. Then, input the chapter/track number or use ◀ / ▶.

Search DVD VCD

1 Press ◀◀ or ▶▶ during playback.
The player will now go into SEARCH mode.
2 Press ◀◀ or ▶▶ repeatedly to select the required speed: ◀◀X2, ◀◀X4, ◀◀X8, ◀◀X16, ◀◀X100 (backward) or ▶▶X2, ▶▶X4, ▶▶X8, ▶▶X16, ▶▶X100 (forward).
With a Video CD, the Search speed changes: ◀◀X2, ◀◀X4, ◀◀X8, ◀◀X16 (backward) or ▶▶X2, ▶▶X4, ▶▶X8, ▶▶X16 (forward).
3 To exit SEARCH mode, press PLAY.

General Features (continued)

Still Picture and Frame-by-frame playback

DVD VCD

1 Press PAUSE/STEP on the remote control during playback.
The player will now go into PAUSE mode.
2 You can advance the picture frame-by-frame by pressing PAUSE/STEP repeatedly on the remote control.
3 To exit still motion mode, press PLAY.

Slow Motion DVD VCD

1 Press ◀I or I▶ during playback.
The player will enter SLOW mode.
2 Use the ◀I or I▶ to select the required speed: ◀I 1/2, ◀I 1/4, ◀I 1/8 or ◀I 1/16 [(backward) - DVD only] or I▶ 1/2, I▶ 1/4, I▶ 1/8 or I▶ 1/16 (forward).
3 To return to normal PLAY, press PLAY.

Note
Slow motion playback in reverse is not applicable for Video CD.

Repeat DVD VCD

You can play a title/chapter/all/track on a disc.

Press REPEAT during playback to select a desired repeat mode.

DVD Video Discs - Repeat Chapter/Title/Off
- Chapter: repeats the current chapter.
- Title: repeats the current title.
- Off : does not play repeatedly.

Video CDs - Repeat Track/All/Off
- Track : repeats the current track
- All : repeats all the tracks on a disc.
- Off : does not play repeatedly.

Note
– On a Video CD with PBC, you must set PBC to Off on the setup menu to use the repeat function (See “PBC” on page 18).

Repeat A-B DVD VCD

To repeat a sequence in a title:

1 Press REPEAT A-B at your chosen starting point.
“ A - ” appears briefly on the TV screen.
2 Press REPEAT A-B again at your chosen end point.
“A - B” appears briefly on the TV screen, and the repeat sequence begins.
3 To cancel the sequence, press REPEAT A-B.

Time Search DVD VCD

The Time Search function allows you to start playing at any chosen time on the disc.

1 Press DISPLAY during playback. The on-screen display appears on the screen.
The Time Search box shows the elapsed playing time of the current disc.
2 Within 10 seconds, press ▲ / ▼ to select the Time Search icon in the on-screen display.
The “-:--:--” appears in the Time Search box.
3 Within 10 seconds, use the number buttons to enter the required start time. Enter hours, minutes, and seconds from left to right in the box.
If you enter the wrong numbers, press CLEAR to remove the numbers you entered. Then enter the correct numbers.
4 Within 10 seconds, press SELECT/ENTER to confirm the start time.
Playback starts from the selected time on the disc. If you enter an invalid time, playback will continue from the current point.

Last Scene Memory DVD

This player memorizes last scene from the last disc that is viewed. The last scene remains in memory even if you remove the disc from the player or switch off the player. If you load a disc that has the scene memorized, the scene is automatically recalled.

Note
This player does not memorize the scene of a disc if you switch off the player before commencing to play the disc.

General Features (continued)

Zoom DVD VCD

The Zoom function allows you to enlarge the video image and to move through the enlarged image.

1 Press ZOOM during playback or still playback to activate the Zoom function.
If you press ZOOM repeatedly, the magnification level increases up to four steps.
100% size (screen fit mode) → 400% size → 800% size→ 1600% size → 100% size (screen fit mode)

2 Use the ▲ / ▼ / ◀ / ▶ buttons to move through the zoomed picture.

Note
The zoom function may not work for some DVDs.

Marker Search DVD VCD

You can start playback from a memorized point. Up to nine points can be memorized.
To enter a mark, follow these steps.

1 During disc playback, press MARKER when playback reaches the spot that you want to memorize.
The Marker icon will appear on the TV screen briefly.

2 Repeat step 1 to enter up to nine Marker points on a disc.

To Recall a Marked Scene

1 During disc playback, press SEARCH.
The MARKER SEARCH menu will appear on the screen.

2 Within 10 seconds, press ◀ / ▶ to select a Marker number that you want to recall.

3 Press SELECT/ENTER.
Playback will start from the Marked scene.

4 To remove the MARKER SEARCH menu, press SEARCH.

To clear a Marked Scene

1 During disc playback, press SEARCH.
The MARKER SEARCH menu will appear on the screen.

2 Press ◀ / ▶ to select the Marker number that you want to erase.

3 Press CLEAR.
The Marker number will be erased from the list.

4 Repeat steps 2 and 3 to erase additional Marker numbers.

5 To remove the MARKER SEARCH menu, press SEARCH.

Special DVD Features DVD

Checking the contents of DVD Video discs: Menus

DVDs may offer menus that allow you to access special features. To use the disc menu, press MENU. Then, press the appropriate number button to select an option. Or, use the ▲ / ▼ / ◀ / ▶ buttons to highlight your selection, then press SELECT/ENTER.

Title Menu DVD

1 Press TITLE.
If the current title has a menu, the menu will appear on the screen. Otherwise, the disc menu may appear.

2 The menu can list camera angles, spoken language and subtitle options, and chapters for the title.

3 To remove the title menu, press TITLE again.

Disc Menu DVD

Press MENU.
The disc menu is displayed.

Camera Angle DVD

If the disc contains scenes recorded at different camera angles, you can change to a different camera angle during playback.

1 Press DISPLAY and then press the ▲ / ▼ to select a angle.
The number of the current angle appears on the display window.

2 Select a desired angle pressing the ◀ / ▶ buttons.

Changing the Audio Language DVD

Press AUDIO repeatedly during playback to hear a different audio language or audio track.

Changing the Audio Channel VCD

Press AUDIO repeatedly during playback to hear a different audio channel (Left, Right or Stereo).

Subtitle DVD

Press SUBTITLE (S-TITLE) repeatedly during playback to see the different subtitle languages.

Note
If ✋ appears, the feature is not available on the disc.

Playing an Audio CD and MP3/WMA Disc CD MP3 WMA

The unit can play MP3/WMA formatted recordings on CD-ROM, CD-R, or CD-RW discs.

Audio CD

Once you insert an audio CD a menu appears on the TV screen. Press ▲ / ▼ to select a track then press PLAY or SELECT/ENTER and playback starts.

MP3 / WMA

1. Press ▲ / ▼ to select a folder, and press SELECT/ENTER to see the folder contents.
2. Press ▲ / ▼ to select a track then press PLAY or SELECT/ENTER. Playback starts.

Notes

- If you are in a file list on the MP3/WMA menu and want to return to the Folder list, use the ▲ / ▼ to highlight ⇧.. on the stop mode and press SELECT/ENTER.
- Press MENU to move to the next page.
- On a CD with MP3/WMA file and JPEG file, you can switch MP3/WMA and JPEG menu. Press TITLE and MP3/WMA or JPEG word on top of the menu is highlighted. Then, use ◀ / ▶ to select MP3/WMA or JPEG then press SELECT/ENTER.

MP3 / WMA disc compatibility with this player is limited as follows:

- Sampling frequency: within 32 - 48 kHz (MP3), within 24 - 48kHz (WMA)
- Bit rate: within 32 - 320kbps (MP3), 40 - 192kbps (WMA)
- The player cannot read an MP3/WMA file that has a file extension other than ".mp3" / ".wma".
- CD-R physical format should be ISO 9660
- If you record MP3 / WMA files using software that cannot create a file system (eg. Direct-CD) it is impossible to playback MP3 / WMA files. We recommend that you use Easy-CD Creator, which creates an ISO 9660 file system.
- File names should have a maximum of 8 letters and must incorporate an .mp3 or .wma extension.
- They should not contain special letters such as / ? * : " < > | etc.
- The total number of files on the disc should be less than 999.

This DVD player requires discs and recordings to meet certain technical standards in order to achieve optimal playback quality. Pre-recorded DVDs are automatically set to these standards. There are many different types of recordable disc formats (including CD-R containing MP3 or WMA files) and these require certain pre-existing conditions (see above) to ensure compatible playback.

Customers should note that permission is required in order to download MP3 / WMA files and music from the Internet. Our company has no right to grant such permission. Permission should always be sought from the copyright owner.

Operation with Audio CD and MP3/WMA Disc

Pause CD MP3 WMA

1 Press PAUSE/STEP during playback.

2 To return to playback, press PLAY or press PAUSE/STEP again.

Moving to another Track CD MP3 WMA

- Press ⏮ or ⏭ briefly during playback to go to the next track or to return to the beginning of the current track.
- Press ⏮ twice briefly to step back to the previous track.
- In case of audio CD, to go directly to any track, enter the track number using the numbered buttons (0-9) during playback.

Repeat Track/All/Off CD MP3 WMA

1 To repeat the track currently playing, press REPEAT.
The Repeat icon and "TRACK" appears on the menu screen.

2 To repeat all tracks on a disc, press REPEAT a second time.
The Repeat icon and "ALL" appears on the menu screen.

3 To cancel Repeat mode, press REPEAT a third time.
The Repeat icon and "OFF" appears on the menu screen.

Search CD MP3 WMA

1 Press ◀◀ or ▶▶ during playback.
The player will now go into SEARCH mode.

2 Press ◀◀ or ▶▶ repeatedly to select the required speed: ◀◀X2, ◀◀X4, ◀◀X8 (backward) or ▶▶X2, ▶▶X4, ▶▶X8 (forward).
Search speed and direction are indicated on the menu screen.

3 To return to playback, press PLAY.

Viewing a JPEG disc JPEG

This unit can play discs with JPEG files. Before playing JPEG recordings, read the notes on JPEG Recordings on right.

1 Insert a disc and close the tray.
The JPEG menu appears on the TV screen.

2 Press ▲ / ▼ to select a folder, and press SELECT/ENTER. A list of files in the folder appears.

Tip
If you are in a file list and want to return to the Folder list, use the ▲ / ▼ buttons on the remote to highlight " " and press SELECT/ENTER to return to the previous menu screen.

3 If you want to view a particular file, press ▲ / ▼ to highlight a file and press SELECT/ENTER or PLAY.
Slide Show starts from the selected file if Speed option is not Off.
While viewing a file, you can press STOP(■) to move to the previous menu (JPEG menu).

Tip
- Press MENU to move to the next page.
- There are four Slide Speed options: :
  > (Slow), >> (Normal), >>> (Fast) and II (off).
  Use ▲ / ▼ / ◀ / ▶ to highlight the Speed. Then, use ◀ / ▶ to select the option you want to use then press SELECT/ENTER.
- If you set Speed option to Off, Slide Show is not active.

Slide Show

Use ▲ / ▼ / ◀ / ▶ to highlight the (Slide Show) then press SELECT/ENTER.

Moving to another File

Press ⏮ or ⏭ once during viewing a picture to advance to the next file or to the previous file.

Still Picture

1 Press PAUSE/STEP during slide show.
The player will now go into PAUSE mode.
2 To return to the slide show, press PLAY or press PAUSE/STEP again.

JPEG disc compatibility with this player is limited as follows:
- Depending upon the size and number of JPEG files, it could take a long time for the DVD player to read the disc's contents. If you don't see an on-screen display after several minutes, some of the files may be too large — reduce the resolution of the JPEG files to less than 2760 x 2048 pixels and burn another disc.
- The total number of files and folders on the disc should be less than 999.
- Some discs may be incompatible due to a different recording format or the condition of disc.
- Ensure that all the selected files have the ".jpg" extensions when copying into the CD layout.
- If the files have ".jpe" or ".jpeg" extensions, please rename them as ".jpg" file.
- File names without ".jpg" extension will not be able to be read by this DVD player. Even though the files are shown as JPEG image files in Windows Explorer.

Programmed Playback CD MP3 WMA

The Program function enables you to store your favorite tracks from any disc in the player memory.
A program can contain 300 tracks (Audio CD/MP3/WMA).

1 Insert a disc.

Audio CD and MP3/WMA Discs:
Audio CD or MP3/WMA menu appears as below.

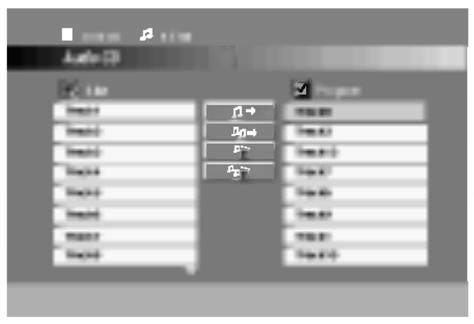

Audio CD Menu

MP3/WMA Menu

2 Select a track on the List.

3 Press PROGRAM. Or, select " ♫→ (Add)" icon then SELECT/ENTER to place the selected track on the Program list. Repeat to place additional tracks on the list.

Note
You can add all tracks in the disc. Select " ♫→ (Add All)l" icon then press SELECT/ENTER.

4 Select the track you want to start playing on the Program list.

Tip
Press MENU to move to the next page.

5 Press PLAY or SELECT/ENTER to start.
Playback begins in the order in which you programmed the tracks and "PROG." appears on the display window. Playback stops after all of the tracks on the Program list have played once.

Repeat Programmed Tracks

You can play a title/chapter/all/track on a disc.

1 Press REPEAT when playing a disc. The repeat icon appears.
2 Press REPEAT to select a desired repeat mode.
- Track: repeats the current track
- All: repeats all the tracks on a disc.
- Off(No display): does not play repeatedly.

Erasing a Track from Program List

1 Use ▲ / ▼ / ◀ / ▶ to select the track that you wish to erase from the Program list.
2 Press CLEAR. Or, select " 🗑 (Delete) icon then Press SELECT/ENTER to place the selected track on the Program list. Repeat to erase additional tracks on the list.

Erasing the Complete Program List

Select " ♫🗑 (Del all)", then press SELECT/ENTER. The complete Program for the disc is erased.

Note
The programs are also cleared when the disc is removed.

To resume normal playback from programmed playback
Select a track on the List then press SELECT/ENTER. "PROG." disappears from the display window.

Operation with DivX Disc

The unit can play the MPEG4 encoded files (.avi, mpg, .mpeg, .divx etc) and subtitle files (.srt, .smi, sub).

1 Insert the MPEG4 encoded disc and close the tray.
The DivX menu appears on the TV screen.

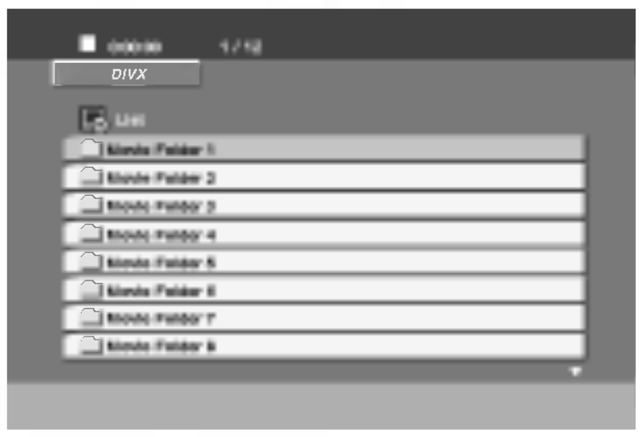

2 Press ▲ / ▼ to select a folder, and press SELECT/ENTER to see the folder contents.

3 Press ▲ / ▼ to select a track then press PLAY or SELECT/ENTER.
Playback starts.

Pause DivX

1. Press PAUSE/STEP during playback.
2. To return to playback, press PLAY.

Repeat Track/All/Off DivX

You can play a title/chapter/all/track on a disc.

1 Press REPEAT when playing a disc. The repeat icon appears.

2 Press REPEAT to select a desired repeat mode.
- Track: repeats the current track
- All: repeats all the tracks on a disc.
- Off (No display): does not play repeatedly.

Subtitle DivX

Press SUBTITLE (S-TITLE) repeatedly during playback to see the different subtitle language.

Search DivX

1 Press ◀◀ or ▶▶ during playback.
2 Press ◀◀ or ▶▶ repeatedly to select the required speed.
3 To exit SEARCH mode, press PLAY.

Display DivX

Press DISPLAY during playback.

General playback status can be displayed on the TV screen.

DivX disc compatibility with this player is limited as follows:

- Available resolution size of the DivX file is under 720x576 (W x H) pixel.
- The file name of the DivX subtitle is available by 20-40 characters (differs from language).
- If there is impossible code to express in the DivX file, it may be displayed as " _ " mark on the display.
- **If the number of the screen frame is over 30 per 1 second, this unit may not operate normally.**
- **If the video and audio structure of recorded file is not interleaved, either video or audio is outputted.**
- **If the file is recorded with GMC, the unit supports some of 1-point of the record level.**
  * GMC?
  GMC is the acronym for Global Motion Compensation. It is an encoding tool specified in MPEG4 standard. Some MPEG4 encoders, like DivX or Xvid, have this option. There are different levels of GMC encoding, usually called 1-point, 2-point, or 3-point GMC.

Playable DivX subtitle file

● ".srt ", ".smi ", ".sub ".

Playable DivX file

● ".avi ", ".mpg ", ".mpeg "

Playable Codec format

● "DIVX3.xx ", "DIVX4.xx ", "DIVX5.xx ", "XVID ", "MP43 ", "3IVX ", "MP42 ".

Playable Audio format

● "AC3 ", "DTS ", "PCM ", "MP3 ", "WMA ".
- Sampling frequency: within 32 - 48 kHz (MP3), within 24 - 48kHz (WMA)
- Bit rate: within 32 - 320kbps (MP3), 40 - 192kbps (WMA)

Troubleshooting

Check the following guide for the possible cause of a problem before contacting service.

Symptom	Cause	Correction
No power.	• The power cord is disconnected.	• Plug the power cord into the wall outlet securely.
The power is on, but the unit does not work.	• No disc is inserted.	• Insert a disc. (Check that the DVD or, audio CD indicator in the DVD display is lit.)
No picture.	• The TV is not set to receive DVD signal output.	• Select the appropriate video input mode on the TV so the picture from the unit appears on the TV screen.
	• The video cable is not connected securely.	• Connect the video cable into the jacks securely.
	• The connected TV power is turned off.	• Turn on the TV.
There is no sound or only a very low-level sound is heard.	• The equipment connected with the audio cable is not set to receive DVD signal output.	• Select the correct input mode of the audio so you can listen to the sound from the unit.
	• The audio cables are not connected securely .	• Connect the audio cable into the jacks securely.
	• The power of the equipment connected with the audio cable is turned off.	• Turn on the equipment connected with the audio cable.
	• The audio connecting cord is damaged.	• Replace it with new one.
The playback picture is poor.	• The disc is dirty.	• Clean the disc.
The unit does not start playback.	• No disc is inserted.	• Insert a disc. (Check that the DVD, or audio CD indicator in the DVD display is lit.)
	• An unplayable disc is inserted.	• Insert a playable disc. (Check the disc type, color system and Regional code.)
	• The disc is placed upside down.	• Place the disc with the playback side down.
	• The disc is not placed within the guide.	• Place the disc on the disc tray correctly inside the guide.
	• The disc is dirty.	• Clean the disc.
	• A menu is on the TV screen.	• Press the SET-UP button to turn off the menu screen.
	• The Rating level is set.	• Cancel the Rating function or change the rating level.
Severe hum or noise is heard.	• The plugs and jacks are dirty.	• Wipe them with a cloth slightly moistened with alcohol.
	• The disc is dirty.	• Clean the disc.
	• The speakers and components are connected poorly.	• Connect the speakers and components securely.
	• The unit is located with too close to the TV.	• Move your TV away from the audio components.
Radio stations cannot be tuned in.	• The antenna is positioned or connected poorly.	• Connect the antenna securely.
		• Adjust the antennas and connect an external antenna if necessary.
	• The signal strength of the stations is too weak (when tuning in with automatic tuning).	• Tune in the station manually.
	• No stations have been preset or preset stations have been cleared (when tuning by scanning preset stations).	• Preset the stations.
The remote control does not work properly.	• The remote control is not pointed at the remote sensor of the unit.	• Point the remote control at the remote sensor of the unit.
	• The remote control is too far from the unit.	• Operate the remote control within about 23 ft (7 m).
	• There is an obstacle in the path of the remote control and the unit.	• Remove the obstacle.
	• The batteries in the remote control are exhausted.	• Replace the batteries with new ones.

Language Code List

Enter the appropriate code number for the initial settings “Disc Audio”, “Disc Subtitle” and/or “Disc Menu” (See page 16).

Code	Language	Code	Language	Code	Language	Code	Language
6566	Abkhazian	7074	Fiji	7678	Lingala	8373	Singhalese
6565	Afar	7073	Finnish	7684	Lithuanian	8375	Slovak
6570	Afrikaans	7082	French	7775	Macedonian	8376	Slovenian
8381	Albanian	7089	Frisian	7771	Malagasy	8379	Somali
6577	Ameharic	7176	Galician	7783	Malay	6983	Spanish
6582	Arabic	7565	Georgian	7776	Malayalam	8385	Sudanese
7289	Armenian	6869	German	7784	Maltese	8387	Swahili
6583	Assamese	6976	Greek	7773	Maori	8386	Swedish
6588	Aymara	7576	Greenlandic	7782	Marathi	8476	Tagalog
6590	Azerbaijani	7178	Guarani	7779	Moldavian	8471	Tajik
6665	Bashkir	7185	Gujarati	7778	Mongolian	8465	Tamil
6985	Basque	7265	Hausa	7865	Nauru	8484	Tatar
6678	Bengali; Bangla	7387	Hebrew	7869	Nepali	8469	Telugu
6890	Bhutani	7273	Hindi	7879	Norwegian	8472	Thai
6672	Bihari	7285	Hungarian	7982	Oriya	6679	Tibetan
6682	Breton	7383	Icelandic	8065	Panjabi	8473	Tigrinya
6671	Bulgarian	7378	Indonesian	8083	Pashto, Pushto	8479	Tonga
7789	Burmese	7365	Interlingua	7065	Persian	8482	Turkish
6669	Byelorussian	7165	Irish	8076	Polish	8475	Turkmen
7577	Cambodian	7384	Italian	8084	Portuguese	8487	Twi
6765	Catalan	7465	Japanese	8185	Quechua	8575	Ukrainian
9072	Chinese	7487	Javanese	8277	Rhaeto-Romance	8582	Urdu
6779	Corsican	7578	Kannada	8279	Rumanian	8590	Uzbek
7282	Croatian	7583	Kashmiri	8285	Russian	8673	Vietnamese
6783	Czech	7575	Kazakh	8377	Samoan	8679	Volapük
6865	Danish	7589	Kirghiz	8365	Sanskrit	6789	Welsh
7876	Dutch	7579	Korean	7168	Scots Gaelic	8779	Wolof
6978	English	7585	Kurdish	8382	Serbian	8872	Xhosa
6979	Esperanto	7679	Laothian	8372	Serbo-Croatian	7473	Yiddish
6984	Estonian	7665	Latin	8378	Shona	8979	Yoruba
7079	Faroese	7686	Latvian, Lettish	8368	Sindhi	9085	Zulu

Country Code List

Enter the appropriate code number for the initial setting "Country Code" (See page 19).

Code	Country
AD	Andorra
AE	United Arab Emirates
AF	Afghanistan
AG	Antigua and Barbuda
AI	Anguilla
AL	Albania
AM	Armenia
AN	Netherlands Antilles
AO	Angola
AQ	Antarctica
AR	Argentina
AS	American Samoa
AT	Austria
AU	Australia
AW	Aruba
AZ	Azerbaidjan
BA	Bosnia-Herzegovina
BB	Barbados
BD	Bangladesh
BE	Belgium
BF	Burkina Faso
BG	Bulgaria
BH	Bahrain
BI	Burundi
BJ	Benin
BM	Bermuda
BN	Brunei Darussalam
BO	Bolivia
BR	Brazil
BS	Bahamas
BT	Bhutan
BV	Bouvet Island
BW	Botswana
BY	Belarus
BZ	Belize
CA	Canada
CC	Cocos (Keeling) Islands
CF	Central African Republic
CG	Congo
CH	Switzerland
CI	Ivory Coast
CK	Cook Islands
CL	Chile
CM	Cameroon
CN	China
CO	Colombia
CR	Costa Rica
CS	Former Czechoslovakia
CU	Cuba
CV	Cape Verde
CX	Christmas Island
CY	Cyprus
CZ	Czech Republic
DE	Germany
DJ	Djibouti
DK	Denmark
DM	Dominica
DO	Dominican Republic
DZ	Algeria
EC	Ecuador
EE	Estonia
EG	Egypt
EH	Western Sahara

Code	Country
ER	Eritrea
ES	Spain
ET	Ethiopia
FI	Finland
FJ	Fiji
FK	Falkland Islands
FM	Micronesia
FO	Faroe Islands
FR	France
FX	France (European Territory)
GA	Gabon
GB	Great Britain
GD	Grenada
GE	Georgia
GF	French Guyana
GH	Ghana
GI	Gibraltar
GL	Greenland
GM	Gambia
GN	Guinea
GP	Guadeloupe (French)
GQ	Equatorial Guinea
GR	Greece
GS	S. Georgia & S. Sandwich Isls.
GT	Guatemala
GU	Guam (USA)
GW	Guinea Bissau
GY	Guyana
HK	Hong Kong
HM	Heard and McDonald Islands
HN	Honduras
HR	Croatia
HT	Haiti
HU	Hungary
ID	Indonesia
IE	Ireland
IL	Israel
IN	India
IO	British Indian Ocean Territory
IQ	Iraq
IR	Iran
IS	Iceland
IT	Italy
JM	Jamaica
JO	Jordan
JP	Japan
KE	Kenya
KG	Kyrgyzstan
KH	Cambodia6
KI	Kiribati
KM	Comoros
KN	Saint Kitts & Nevis Anguilla
KP	North Korea
KR	South Korea
KW	Kuwait
KY	Cayman Islands
KZ	Kazakhstan
LA	Laos
LB	Lebanon

Code	Country
LC	Saint Lucia
LI	Liechtenstein
LK	Sri Lanka
LR	Liberia
LS	Lesotho
LT	Lithuania
LU	Luxembourg
LV	Latvia
LY	Libya
MA	Morocco
MC	Monaco
MD	Moldavia
MG	Madagascar
MH	Marshall Islands
MK	Macedonia
ML	Mali
MM	Myanmar
MN	Mongolia
MO	Macau
MP	Northern Mariana Islands
MQ	Martinique (French)
MR	Mauritania
MS	Montserrat
MT	Malta
MU	Mauritius
MV	Maldives
MW	Malawi
MX	Mexico
MY	Malaysia
MZ	Mozambique
NA	Namibia
NC	New Caledonia (French)
NE	Niger
NF	Norfolk Island
NG	Nigeria
NI	Nicaragua
NL	Netherlands
NO	Norway
NP	Nepal
NR	Nauru
NU	Niue
NZ	New Zealand
OM	Oman
PA	Panama
PE	Peru
PF	Polynesia (French)
PG	Papua New Guinea
PH	Philippines
PK	Pakistan
PL	Poland
PM	Saint Pierre and Miquelon
PN	Pitcairn Island
PR	Puerto Rico
PT	Portugal
PW	Palau
PY	Paraguay
QA	Qatar
RE	Reunion (French)
RO	Romania
RU	Russian Federation
RW	Rwanda
SA	Saudi Arabia
SB	Solomon Islands

Code	Country
SC	Seychelles
SD	Sudan
SE	Sweden
SG	Singapore
SH	Saint Helena
SI	Slovenia
SJ	Svalbard and Jan Mayen Islands
SK	Slovak Republic
SL	Sierra Leone
SM	San Marino
SN	Senegal
SO	Somalia
SR	Suriname
ST	Saint Tome and Principe
SU	Former USSR
SV	El Salvador
SY	Syria
SZ	Swaziland
TC	Turks and Caicos Islands
TD	Chad
TF	French Southern Territories
TG	Togo
TH	Thailand
TJ	Tadjikistan
TK	Tokelau
TM	Turkmenistan
TN	Tunisia
TO	Tonga
TP	East Timor
TR	Turkey
TT	Trinidad and Tobago
TV	Tuvalu
TW	Taiwan
TZ	Tanzania
UA	Ukraine
UG	Uganda
UK	United Kingdom
UM	USA Minor Outlying Islands
US	United States
UY	Uruguay
UZ	Uzbekistan
VA	Vatican City State
VC	Saint Vincent & Grenadines
VE	Venezuela
VG	Virgin Islands (British)
VI	Virgin Islands (USA)
VN	Vietnam
VU	Vanuatu
WF	Wallis and Futuna Islands
WS	Samoa
YE	Yemen
YT	Mayotte
YU	Yugoslavia
ZA	South Africa
ZM	Zambia
ZR	Zaire
ZW	Zimbabwe

Specifications

General Section

Power supply	Refer to the main label.
Power consumption	140W
Mass	7.6kg
External dimensions (W x H x D)	170 x 340 x 300 mm

Tuner/Amplifier Section

FM	Tuning Range	87.5 - 108.0 MHz or 65 -74 MHz, 87.5 -108.0 MHz
	Intermediate Frequency	10.7 MHz
	Signal to Noise Ratio	60/55 dB (Mono/Stereo)
	Frequency Response	60 - 10000 Hz
AM	Tuning Range	522 - 1611 kHz or 530 - 1610 kHz or 530 - 1720 kHz
	Intermediate Frequency	450 kHz
	Signal to Noise Ratio	35 dB
	Frequency Response	100 - 2000 Hz
Output Power		Speaker : 30W + 30W (6Ω / 2ch THD 10 %) Subwoofer: 60W (6Ω, THD 10 %)
T.H.D		0.5%
Frequency Response		40 - 20000 Hz
Signal-to-noise ratio		80 dB

Cassette tape player/DVD/VCD/CD player Section

DVD/VCD/CD player

Frequency response (audio)	40 - 18000 Hz
Signal-to-noise ratio (audio)	More than 70 dB (1 kHz)
Signal-to-noise ratio (video)	More than 60 dB (1 kHz)
Dynamic range (audio)	More than 70 dB
Video output	1.0 V (p-p), 75 Ω
S-video output	(Y) 1.0 V (p-p), 75 Ω (C) 0.3 V (p-p), 75 Ω
Component Video output	(Y) 1.0 V (p-p), 75 Ω, negative sync., RCA jack x 1 (Pb)/(Pr) 0.7 V (p-p), 75 Ω, RCA jack x 2

Cassette tape player

Tape Speed	3 kHz ± 3%
Wow Flutter	0.25% (MTT -111, JIS-WTD)
F.F/REW. Time	120sec (C-60)
Frequency Response	125 - 8000Hz
Signal to Noise Ratio	43dB(P/B)/43dB(R/B)
Channel Separation	50dB(P/B)/45dB(R/P)
Erase Ratio	55dB (MTT-5511)

Speaker Section

Speaker Name	Speaker (L/R)	Subwoofer
Type	2 Way 2 Speaker	1 Way 1 Speaker
Impedance	6 Ω	6 Ω
Frequency Response	80 - 20000 Hz	55 - 1200 Hz
Sound Pressure Level	85 dB/W (1m)	82 dB/W (1m)
Rated Input Power	30 W	60 W
Max. Input Power	60 W	120 W
Net Dimensions (W x H x D)	200X340X208mm	170X335X263mm
Net Weight	2.9 kg	3.3 kg

P/NO : 3834RH0105Y