LG

LG DLP PROJECTOR

AN110B-JD
AN110W-JD

OWNER'S MANUAL

Please read this manual carefully before operating your set. Retain it for future reference.

Record model number and serial number of the set below.
See the label attached on the bottom of the set and quote this information to your dealer if you require service.

Model number :
Serial number :

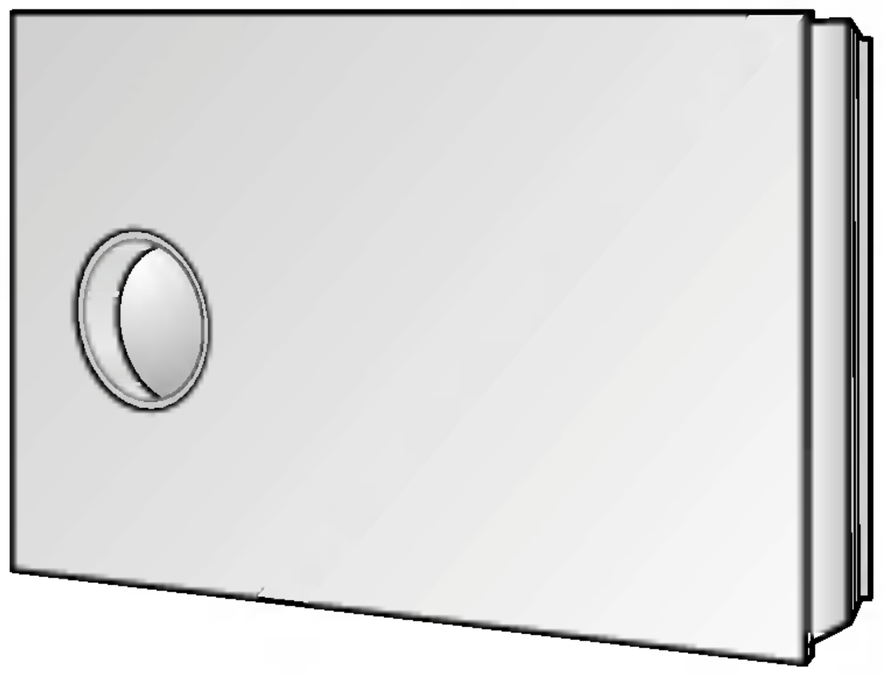

DLP PROJECTOR

FCC NOTICE

- **A Class B digital device**
  This equipment has been tested and found to comply with the limits for a Class B digital device, pursuant to Part 15 of the FCC Rules. These limits are designed to provide reasonable protection against harmful interference in a residential installation. This equipment generates, uses and can radiate radio frequency energy and, if not installed and used in accordance with the instructions, may cause harmful interference to radio communications. However, there is no guarantee that interference will not occur in a particular installation. If this equipment does cause harmful interference to radio or television reception, which can be determined by turning the equipment off and on, the user is encouraged to try to correct the interference by one or more of the following measures:
  - Reorient or relocate the receiving antenna.
  - Increase the separation between the equipment and receiver.
  - Connect the equipment into an outlet on a circuit different from that to which the receiver is connected.
  - Consult the dealer or an experienced radio/TV technician for help.
- **Any changes or modifications not expressly approved by the party responsible for compliance could void the user's authority to operate the equipment.**

Warning
This is a class B product. In a domestic environment this product may cause radio interference, in which case the user may be required to take adequate measures.

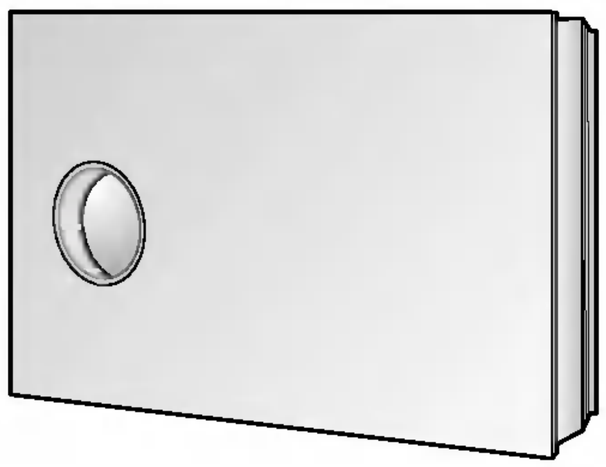

Contents

Introduction
Safety Instructions 4

Part Descriptions
Main Body 7
Control Panel 8
Remote Control 9
Installing Batteries 9
Projector Status Indicators 10
Accessories 11
Optional Extras 11

Installing and Composition
Installation Instructions 12
Basic Operation of the Projector 13
Installing the projector to the wall 14
Turning on the Projector 20
Turning off the Projector 20
Selecting source mode 20
Focus, Zoom, Position of the Screen Image ..21

Connection
Connecting to a Desktop PC 22
Connecting to a Notebook PC 22
Connecting to a Video Source 23
Connecting to a DVD 23
Connecting to a D-TV Set-Top Box 24
HDMI 25

Function
Video Menu Options
Adjusting Video 26
APC (Auto Picture Control) 26
Auto Color Temperature Control 27
Gamma Function 27
White peaking Function 28
Color Temperature Control 28
Color enhancement Control 28

Special Menu Options
Selecting Language 29
Using ARC Function 29
Flip horizontal Function 30
XD Demo 30
Auto sleep Function 30
Using Keystone function 31
Using Blank function 31
Selecting Blank image color 32
Lamp mode Function 32
Checking Lamp time 32
Tilt function 33
Using Still function 33

Screen Menu Options
Auto configure Function 34
Manual configure 34
Using ZOOM function 35
Screen Position 35

RS-232C
External Control Device Setup 36

Information
Supported Monitor Display 41
Maintenance 42
Replacing the Lamp 43
Memo 45
Specifications 47

Disposal of your old appliance

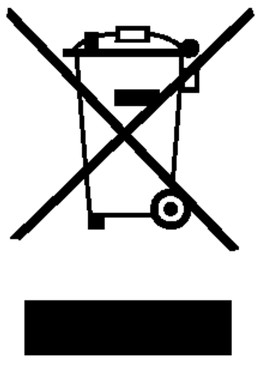

1. When this crossed-out wheeled bin symbol is attached to a product it means the product is covered by the European Directive 2002/96/EC.
2. All electrical and electronic products should be disposed of separately from the municipal waste stream via designated collection facilities appointed by the government or the local authorities.
3. The correct disposal of your old appliance will help prevent potential negative consequences for the environment and human health.
4. For more detailed information about disposal of your old appliance, please contact your city office, waste disposal service or the shop where you purchased the product.

Safety Instructions

Please take note of the safety instructions to prevent any potential accident or misuse of the projector.

➟ Safety Instructions are given in two forms as detailed below.

⚠ **WARNING** : The violation of this instruction may cause serious injuries and even death.
⚠ **NOTES** : The violation of this instruction may cause light injuries or damage to the projector.

➟ After reading this manual, keep it in the place that the user always can contact easily.

Indoor Installation

⚠ WARNING

Stand the projector when you install.

If not, the power turns off.

Do not place the Projector in direct sunlight or near heat sources such as radiators, fires and stove etc.

This may cause a fire hazard !

Do not place inflammable materials beside the projector

This may cause a fire hazard !

Do not allow children to hang on the installed projector.

It may cause the projector to fall, causing injury or death.

Indoor Installation

⚠ NOTES

Disconnect the power and remove all connections before moving.

Do not place the projector close to sources of steam or oil such as a humidifier.

This may create a fire hazard or an electric shock hazard !

Do not place the projector where it might be exposed to excessive dust.

This may cause a fire hazard !

Only use the projector on a level and stable place.

It may become unstable and affect operation.

Ensure good ventilation around the projector. The distance between the projector and the ceiling or bottom should be more than 20cm/8 inches.

An excessive increase in its internal temperature may cause a fire hazard!

Do not block the vents of the projector or restrict air-flow in any way.

This would cause the internal temperature to increase and could cause a fire hazard!

Do not place the projector directly on a carpet, rug or place where ventilation is restricted.

This would cause its internal temperature to increase and might create a fire hazard !

Outdoor Installation

⚠ WARNING

Do not use the projector in a damp place such as a bathroom where it is likely to get wet.

This may cause a fire or an electric shock hazard !

Power

⚠ WARNING

Earth wire should be connected.

If the earth wire is not connected, there is a possible danger of electric shock caused by the current leakage.
If grounding methods are not possible, a separate circuit breaker should be employed and installed by a qualified electrician.
Do not connect ground to telephone wires, lightning rods or gas pipe.

The mains plug should be inserted fully into the power outlet to avoid a fire hazard !

This may cause a fire hazard !

Do not place heavy objects on the power cord

This may cause a fire or an electric shock hazard !

Power — ⚠ WARNING

Do not plug too many devices into one outlet.

It may result in overheating of the outlet and causes a fire hazard !

Power — ⚠ NOTES

Never touch the power plug with a wet hand This may cause an electric shock hazard !	Hold the plug firmly when unplugging. If you pull the cord the cord may be damaged. This may cause a fire hazard !	Prevent dust collecting on the power plug pins or outlet. This may cause a fire hazard !
Do not plug in when the power cord or the plug is damaged or the connecting part of the power outlet is loose. This may cause a fire or an electric shock hazard !	Ensure the power cord does not come into contact with sharp or hot objects such as a heater. This may cause a fire or an electric shock hazard !	Place the projector where people will not trip or tread on the power lead. This may cause a fire or an electric shock hazard !

Do not turn the projector On/Off by plugging-in or unplugging the power plug to the wall outlet.
(Do not use a switched power outlet to turn the unit on and off.)

It may cause mechanical failure or could give an electric shock.

Using — ⚠ WARNING

Do not place anything containing liquid on top of the projector such as flowerpot, cup, cosmetics or candle. This may cause a fire hazard !	In case of impact shock or damage to the projector, switch it off and unplug it from the outlet. Contact a service center. This may cause a fire or an electric shock hazard !	Do not allow any objects to fall into the projector. This may cause an electric shock hazard !
If water is spilt into the projector, unplug it from the outlet immediately and consult a Service Agent. This may cause an electric shock hazard !	Dispose of used batteries carefully and safely. In the case of a battery being swallowed by a child please consult a doctor immediately.	In the event that an image does not appear on the screen, please switch the unit off and unplug it from power outlet. Contact a Service Agent. This may cause a fire or an electric shock hazard !
Do not remove any covers (except lens cover). High risk of Electric Shock!	Don’t look directly onto the lens when the projector is in use. Eye damage may occur!	Do not touch metal parts during or soon after operation since the vents and lamp cover will remain very hot!

CAUTION concerning the Power Cord

Most appliances recommend they be placed upon a dedicated circuit; that is,a single outlet circuit which powers only that appliance and has no additional outlets or branch circuits.Check the specification page of this owner's manual to be certain.

Do not overload wall outlets. Overloaded wall outlets,loose or damaged wall outlets, extension cords, frayed power cords,or damaged or cracked wire insulation are dangerous.Any of these conditions could result in electric shock or fire. Periodically examine the cord of your appliance,and if its appearance indicates damage or deterioration, unplug it, discontinue use of the appliance, and have the cord replaced with an exact replacement part by an authorized servicer.

Protect the power cord from physical or mechanical abuse, such as being twisted, kinked, pinched, closed in a door, or walked upon. Pay particular attention to plugs, wall outlets, and the point where the cord exits the appliance.

Using ⚠ WARNING

Never touch the wall outlet when there is leakage of gas, open the windows and ventilate.

It can cause a fire or a burn by a spark.

Do not drop the projector or allow impact shock.

This may cause mechanical failure or personal injury !

Using ⚠ NOTES

Do not place heavy objects on top of projector.

This may cause mechanical failure or personal injury!

Take care not to cause impact to the lens particularly when moving the projector.

Do not touch the lens of the projector. It is delicate and easily damaged.

Do not use any sharp tools on the projector as this will damage the casing.

Cleaning ⚠ WARNING

Do not use water while cleaning the projector

This may cause damage to the projector or an electric shock hazard.

In the unlikely event of smoke or a strange smell from the projector, switch it off, unplug it from the wall outlet and contact your dealer or a service center.

This may cause a fire or an electric shock hazard !

Use an air spray or soft cloth that is moist with a neutral detergent and water for removing dust or stains on the projection lens.

Cleaning ⚠ NOTES

Contact a Service Center once a year to clean the internal parts of the projector.

Accumulated dust can cause mechanical failure.

Unplug this product from the wall outlet before cleaning. Do not use liquid cleaners or aerosol cleaners.

This may cause damage to the Projector or cause an electric shock hazard !

Others ⚠ WARNING

Do not attempt to service the projector yourself. Contact your dealer or a service center.

This may cause damage to the projector and could give an electric Shock as well as invalidating the warranty !

Others ⚠ NOTES

Be sure to unplug if the projector is not to be used for a long period.

Accumulated dust may cause a fire hazard!

Refer to 43~44 page to replace the lamp.

Do not mix new batteries with old batteries.

This may cause the batteries to overheat and leak.

Only use the specified type of battery.

This could cause damage to the remote control.

Part Descriptions

Main Body

* The projector is manufactured using high-precision technology. You may, however, see on the Projector screen tiny black points and/or bright points (red, blue, or green). This can be a normal result of the manufacturing process and does not always indicate a malfunction.

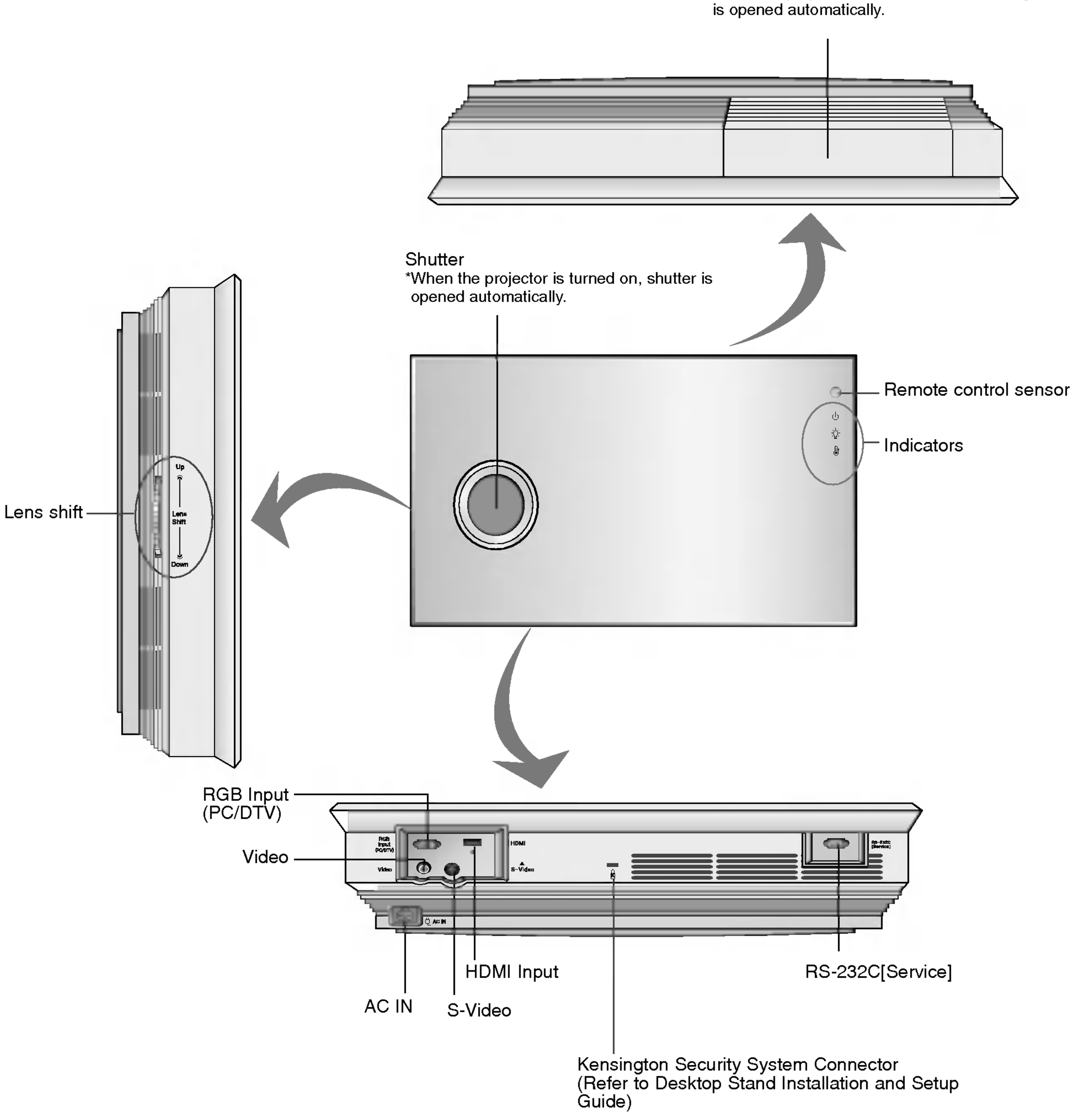

Control Panel

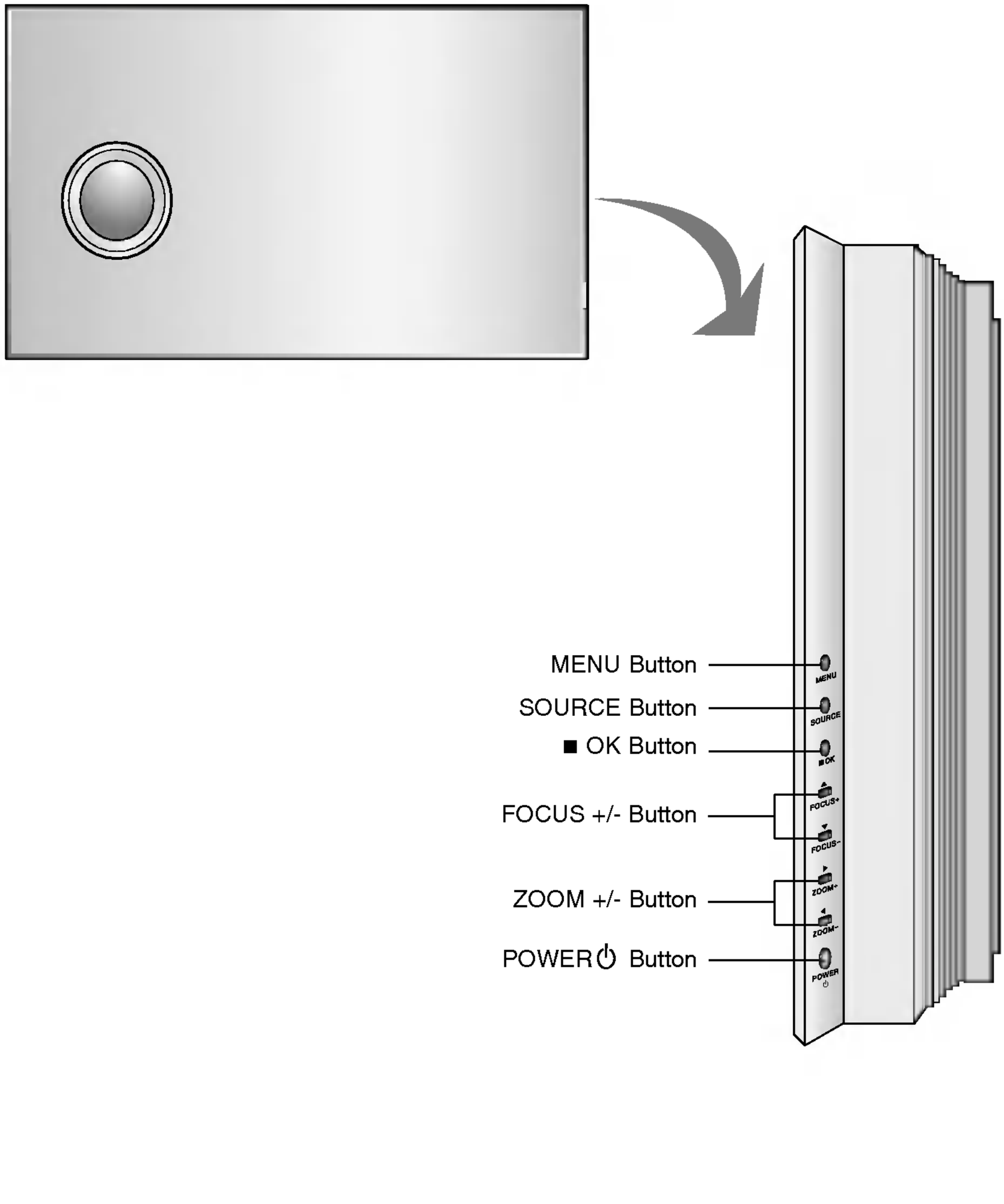

Remote Control

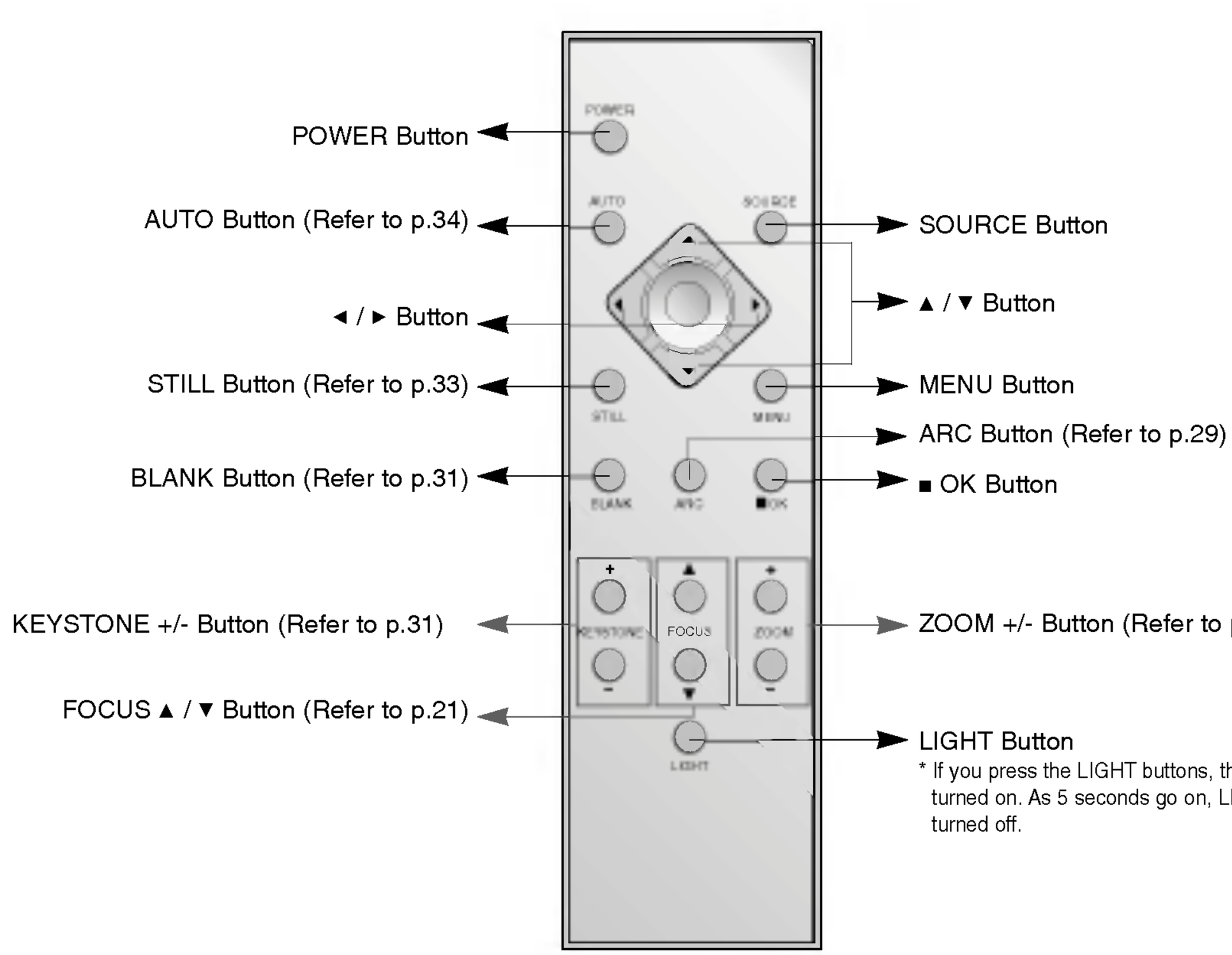

Installing Batteries

CAUTION
RISK OF EXPLOSION IF BATTERY IS REPLACED BY AN INCORRECT TYPE.
DISPOSE OF USED BATTERIES ACCORDING TO THE INSTRUCTIONS.

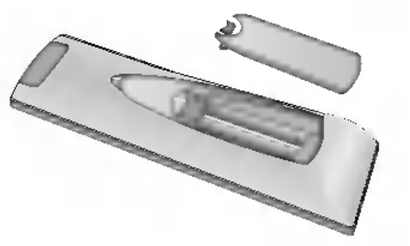

- Open the battery compartment cover on the back of the remote control and insert the batteries with correct polarity, match “+” with “+”, and match “-” with “-”.
- Install two 1.5V “AAA” batteries.
  Don’t mix used batteries with new batteries.

Projector Status Indicators

* Lamp Indicator, operation indicator and temperature indicator at the top of the projector show the user the operating status of the projector.

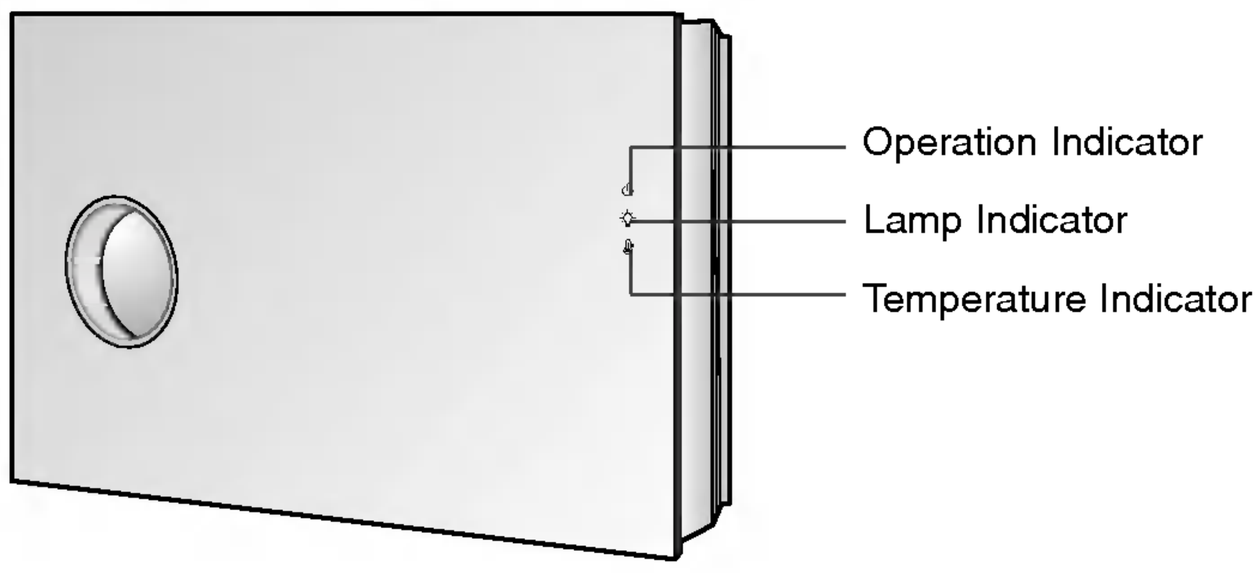

Operation Indicator	Orange	Standby.
	Green(flashing)	Lamp cooling until the lamp turn on.
	Green	On operation. (Turn on the lamp)
	Orange(flashing)	Projector lamp is cooling as power out (2 minutes)
	Off	Power off.
Lamp Indicator	Red	Projector lamp is reaching the end of its life and needs to be replaced with a new lamp. (over 4000 hours) The OSD, “Replace the lamp” is displayed 5 seconds from the first power on.
	Red(flashing)	The projector has trouble in the lamp or around it at power-on. Retry Power On again later. If lamp indicator is red (flashing) again, contact a service center.
	Green(flashing)	The lamp cover is not closed.
	Orange(flashing)	It’s state of not opening well the door or shutter. Contact a service center.
Temperature Indicator	Orange	This projector is in high temperature. Turn the power of projector off and check the ventilator.
	Red	The projector is turned off as its high temperature.
	Red (flashing)	Power has turned off due to problem with the internal cooling fan. Contact a service center.

* If operation indicator is red, it’s state of checking the closed door or shutter.

Accessories



Remote Control

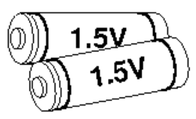

2 Batteries (size AAA)



Power Cord



Video Cable



Computer Cable



RCA to D-Sub Adaptor

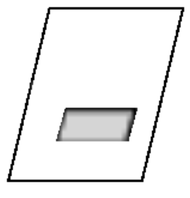

Operating guide

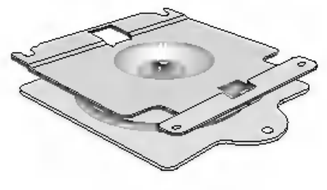

Wall mounting bracket

* Bolt and anchor are included in the wall bracket.

Optional Extras

* Contact your dealer to purchase these items.
* Contact your service personnel for replacing a new lamp.
* Projector lamp is reaching the end of its life and needs to be replaced with a new lamp.

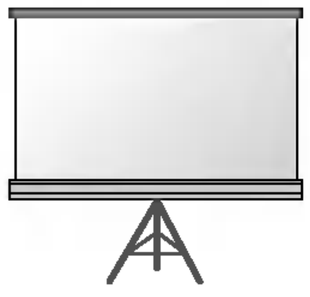

Projection Screen



Lamp



Desktop Stand



SCART to RCA jack (option)



S-Video Cable



HDMI Cable



HDMI to DVI Cable



RS-232C Cable

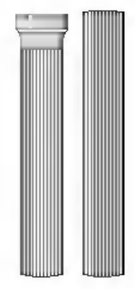

Cable Cover

Installation and Composition

Installation Instructions

* Don't place the projector in the following conditions. It may cause malfunction or product damage.

Provide proper ventilation for this projector.

- The projector is equipped with ventilation holes(intake) on the bottom and ventilation holes(exhaust) on the front. do not block or place anything near these holes, or internal heat build-up may occur, causing picture degradation or damage to the projector.

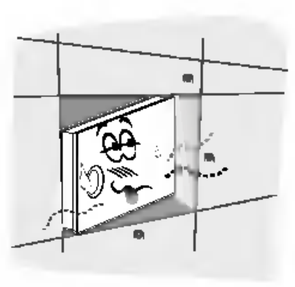

- Ensure good ventilation around the projector.
  The distance between the projector and the ceiling or bottom should be more than 20cm/8 inches.

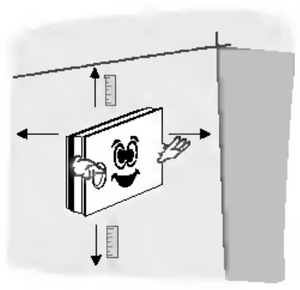

- Never insert materials as paper into the lower of the projector.

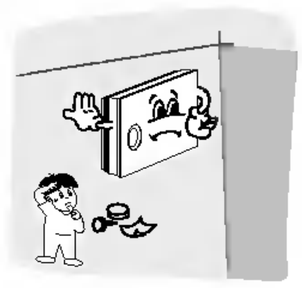

Place this projector in adequate temperature and humidity conditions.

- Install this projector only in a location where adequate temperature and humidity is available. (refer p.47)

Don't place the projector where it can be covered with dust.

- This may cause overheating of the projector.

The projector is manufactured using high-precision technology. You may, however, see tiny black points and/or bright points (red, blue, or green) that continuously appear on the projector Screen. This is a normal result of the manufacturing process and does not indicate a malfunction.

To display DTV programs, it is necessary to connect a DTV receiver (Set-top Box) and connect it to the projector.

If there is no input signal, the Menu will not be displayed on screen.

Basic Operation of the Projector

1. Place the projector on a wall.
2. Place the projector the correct distance from the screen. The distance between the projector and the screen determines the actual size of the image.
3. Position the projector so that the lens is set at a right angle to the screen. If the projector is not set at a right angle, the screen image will be crooked. If this is so then the keystone adjustment may correct this (Refer to page 31.)
4. Connect the cables of the projector to a wall power socket and other connected sources.

projection distance based on the picture format

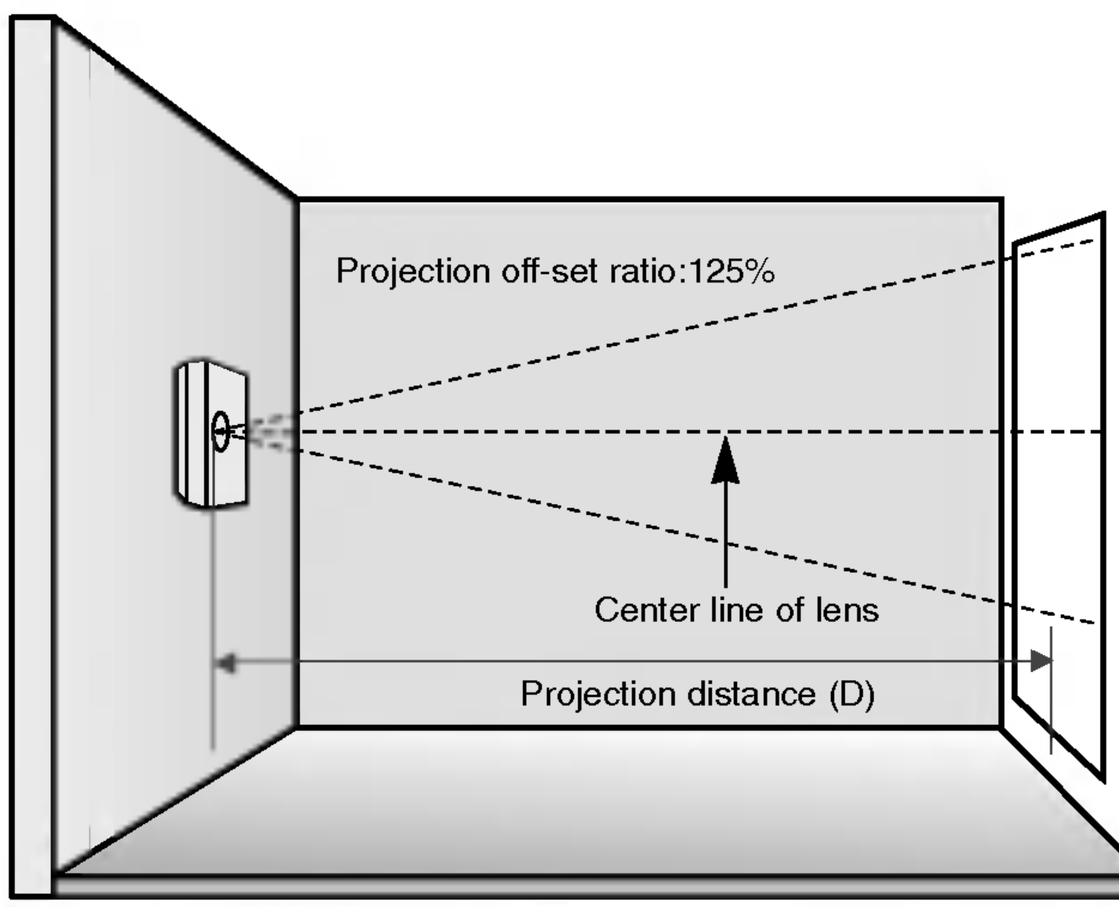

16:9 picture format									mm / inches
screen size	40″	60″	80″	100″	120″	140″	160″	180″	200″
The shortest distance (D)	1507/59	2273/89	3039/120	3804/150	4570/180	5336/210	6101/240	6867/270	7633/301
The longest distance (D)	2109/830	3180/1252	4251/1674	5323/2096	6394/2517	7466/2939	8537/3361	9608/3783	10680/4205

* The longest/shortest distance show status when adjusted by the zoom function.

Installing the projector to the wall

Safety instructions on installing the wall

Please take note of the safety instructions to prevent any potential accident or misuse of the projector.

➟ Safety Instructions are given in two forms as detailed below.

⚠ **WARNING** : The violation of this instruction may cause serious injuries and even death.

⚠ **NOTES** : The violation of this instruction may cause light injuries or damage to the projector.

➟ After reading this manual, keep it in the place that the user always can contact easily.

⚠ WARNING

Do not install this product on the place where it cannot be supported. It may cause the product to fall and could cause injuries.	Do not hang on or impact this product. It may cause the product to fall and could cause injuries.

⚠ NOTES

Follow the instructions when installing this product. Otherwise it may cause serious injuries or damage of the product.	Do not install this product by yourself. Get some help from others. It may cause the product to fall and could cause injuries.
Before installing, check whether the material of wall satisfies the specifications and make sure to use enclosed anchors supplied with the product. Otherwise it may cause safety problem.	When drilling use drill and drill bit specified by the manufacturer. And the depth of the hole should satisfy the specifications. Otherwise it may cause safety problem.
Do not place a heat source (radiator or heater) or a humidifier under the installed product. It may cause a fire or could give an electric shock.	Do not install this product near a sprinkler, a sensor, a high voltage electric line, any power source or the place where impact or vibration can affect.
Unplug the product before installing. Otherwise it may cause a fire or could give an electric shock.	Do not install this product barehanded. It may cause injuries.

Accessories for wall mounting bracket


Wall mounting bracket


Bolts for wall mounting bracket


Wall anchor bolt sleeves


Bolts for fixing the bracket


Fixing fixers


Bolts for using the wood

Installing Wall mounting bracket

1 Detach the products

- Detach bolt from wall mounting bracket.
- Detach product fixing bracket from Wall mounting bracket.

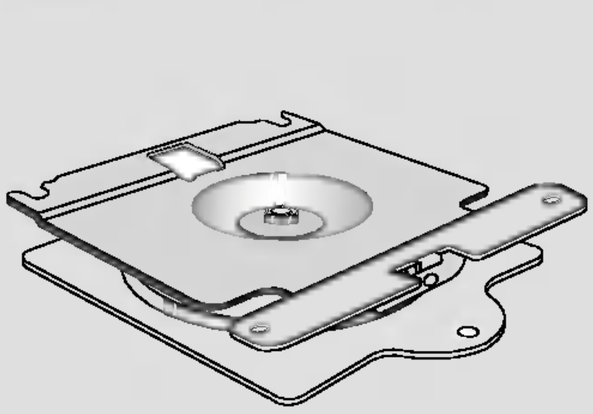

➡ Press the upper of the wall bracket with both hands to tilt the bracket. It's convenient when joining the fixing bolt.(Refer to p.18)

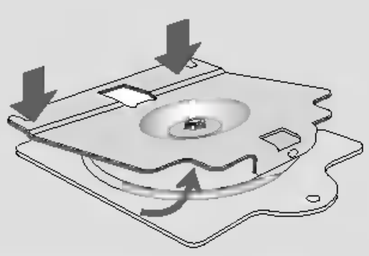

2 Assemble projector with the product fixing bracket

a. Carefully place the lens side down on a cushioned surface that will protect the lens from damage.

b. Insert the 2 fixing fixers on the top of the projector.(It's top that the point of auto ventilation door.)

c. Insert the product brackets detached in the fig.1 on the projector with bracket fixing bolts.

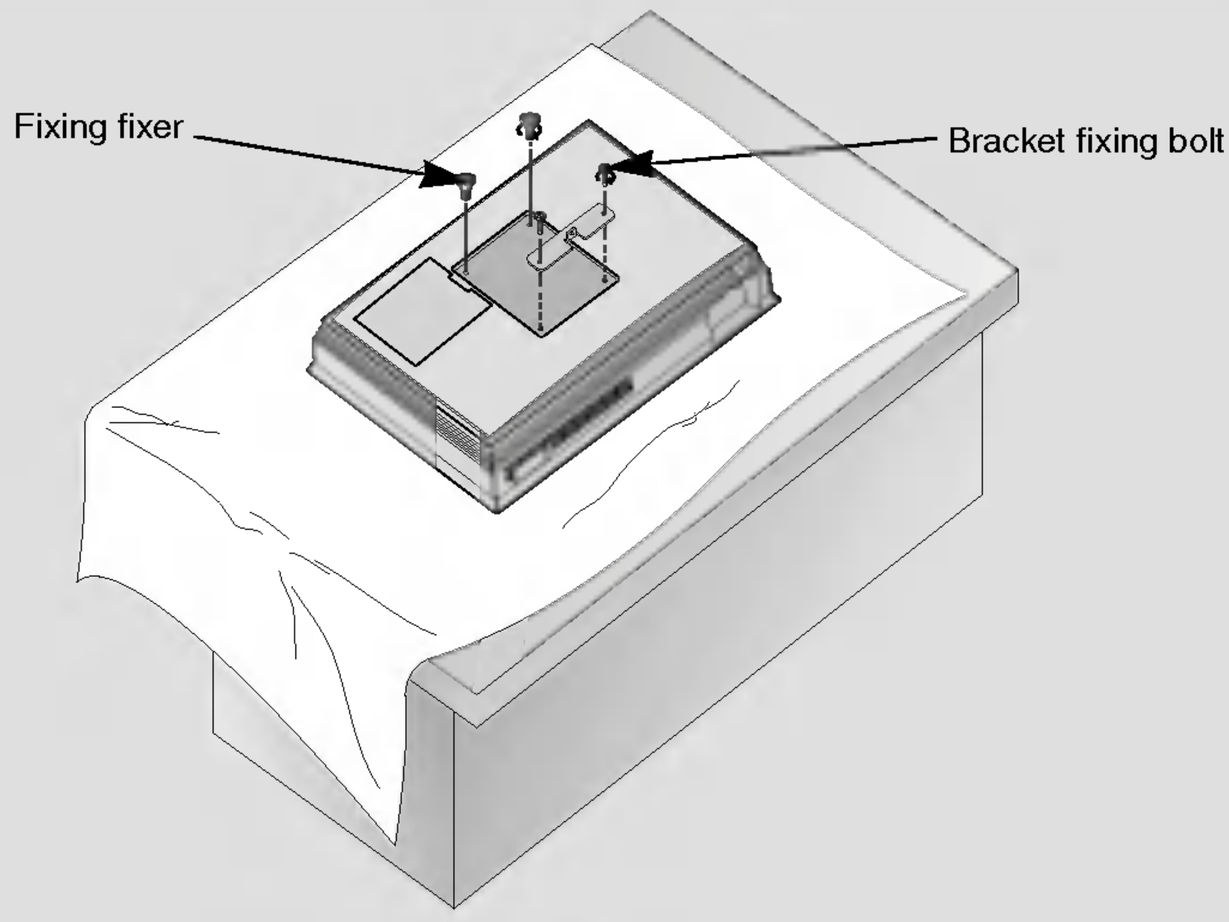

3 Insert anchors or bolts for using the wood after marking the positions where products are mounted on the wall

- Check the surface or thickness that the wall mounting bracket.
- When the surface that the wall mounting bracket is concrete, strong , weak natural rock, brick and hollow block, you can use the supplied anchors or bolts.
- Only thickness of strike off material is less than 20mm, you can use the supplied anchors or bolts.
- Only making wood into wall, you can use the supplied bolts for using the wood.
- Plasterboard is not a sufficiently strong enough material.

Using the wall anchor bolt sleeves and bolts for wall mounting bracket

a. After matching the positions of the wall bracket, mark the positions of the anchor.

b. At the position of anchor marked in the wall, using on 6mm drill appropriate for the material on the wall, drill each hole to a depth of above 40~50mm.

c. Clean each drilled hole and insert an anchor supplied with the wall mounting bracket into each hole.

a

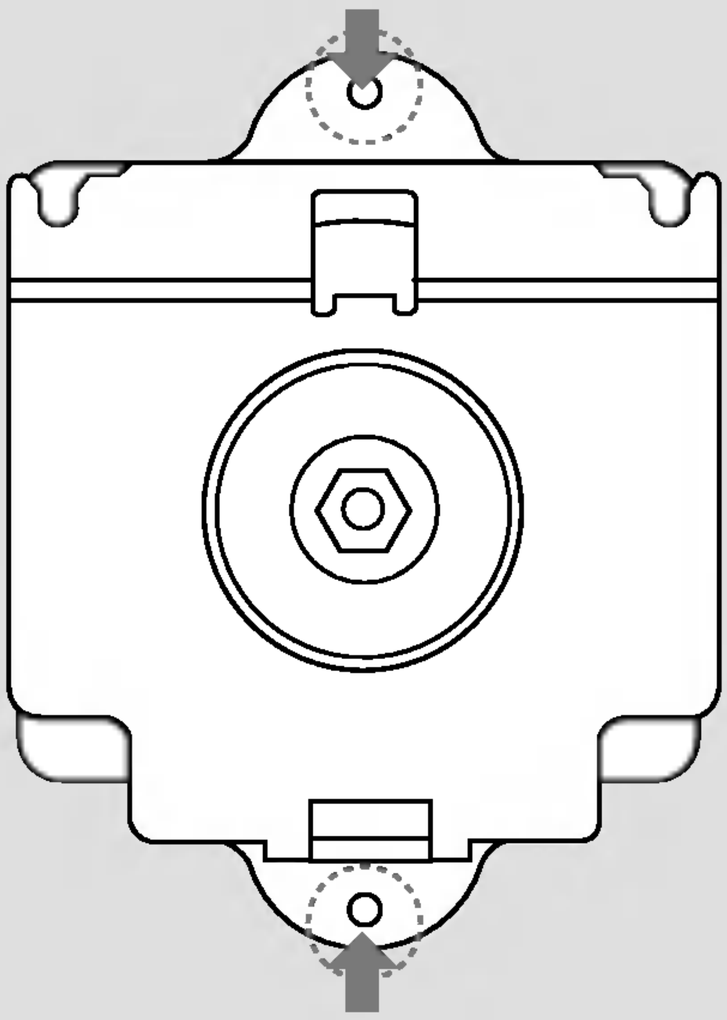

➡ : Anchors insertion position

b

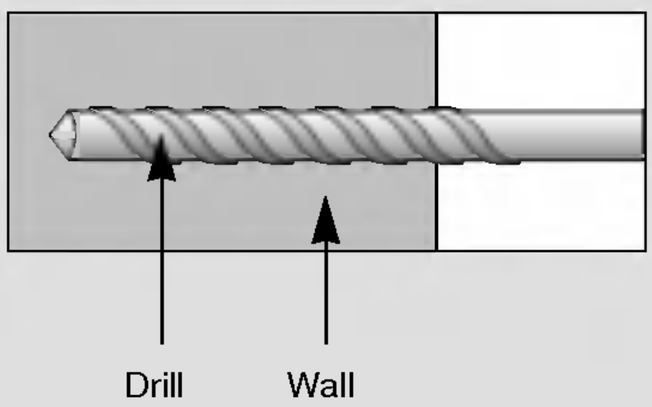

c

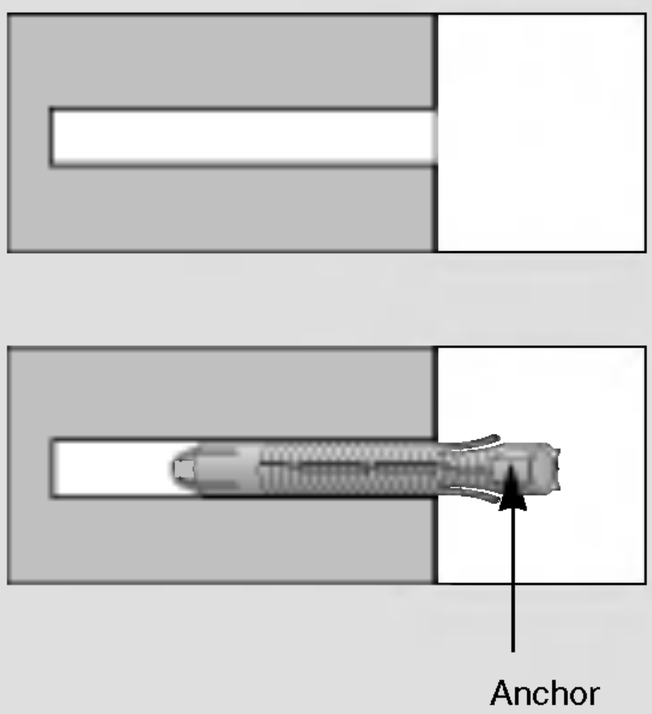

4 Install the wall mounting bracket on the wall

Using the wall anchor bolt sleeves and bolts for wall mounting bracket

a. Mount the wall mounting bracket on the wall as setting the hole.

b. Insert the bolts for wall mounting bracket as setting the each hole.

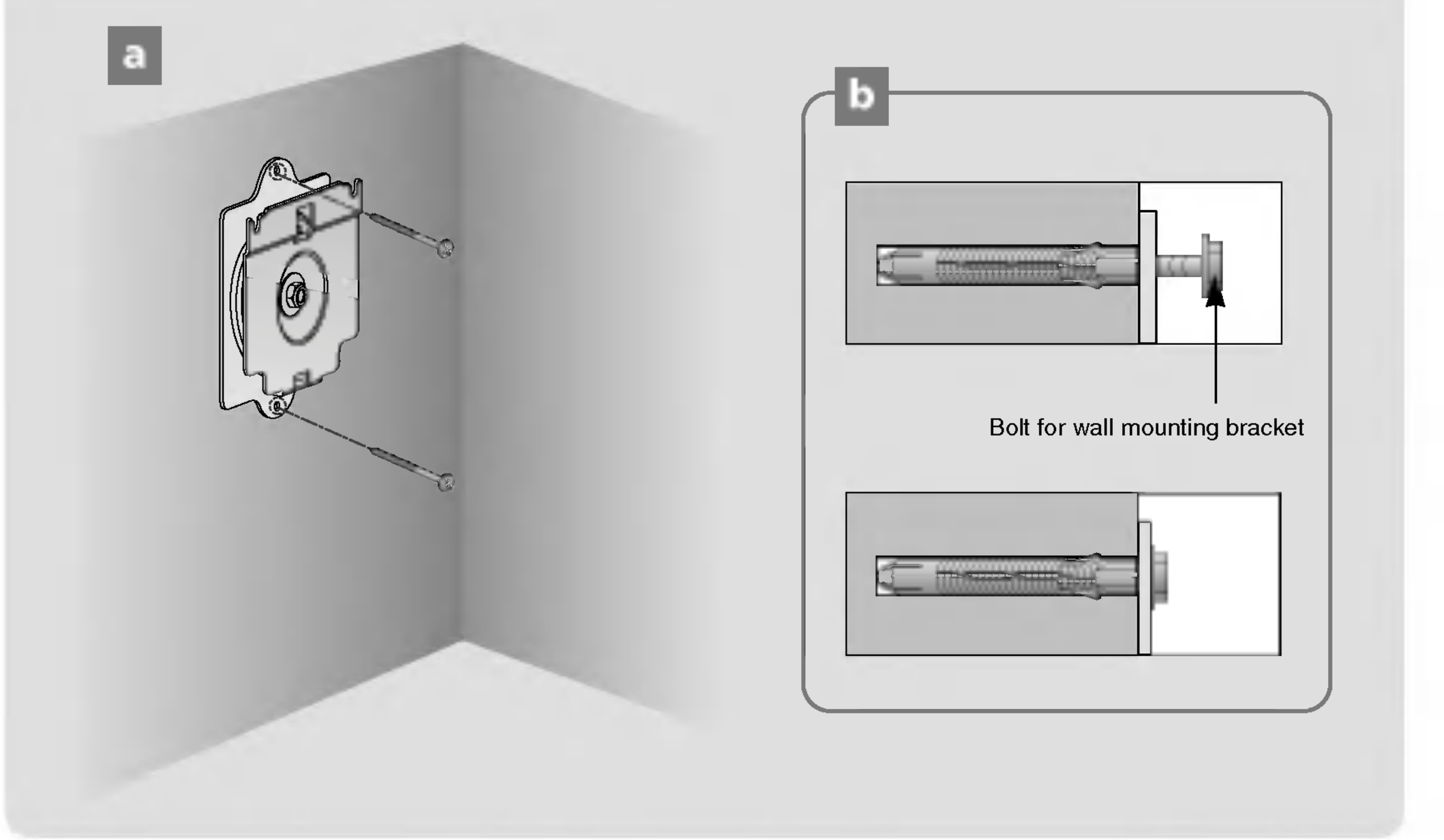

Using the bolts for using the wood

● Only making wood into wall, you can use.

- After matching the position of the wall, mount the wall mounting bracket using the bolts for using the wood supplied.

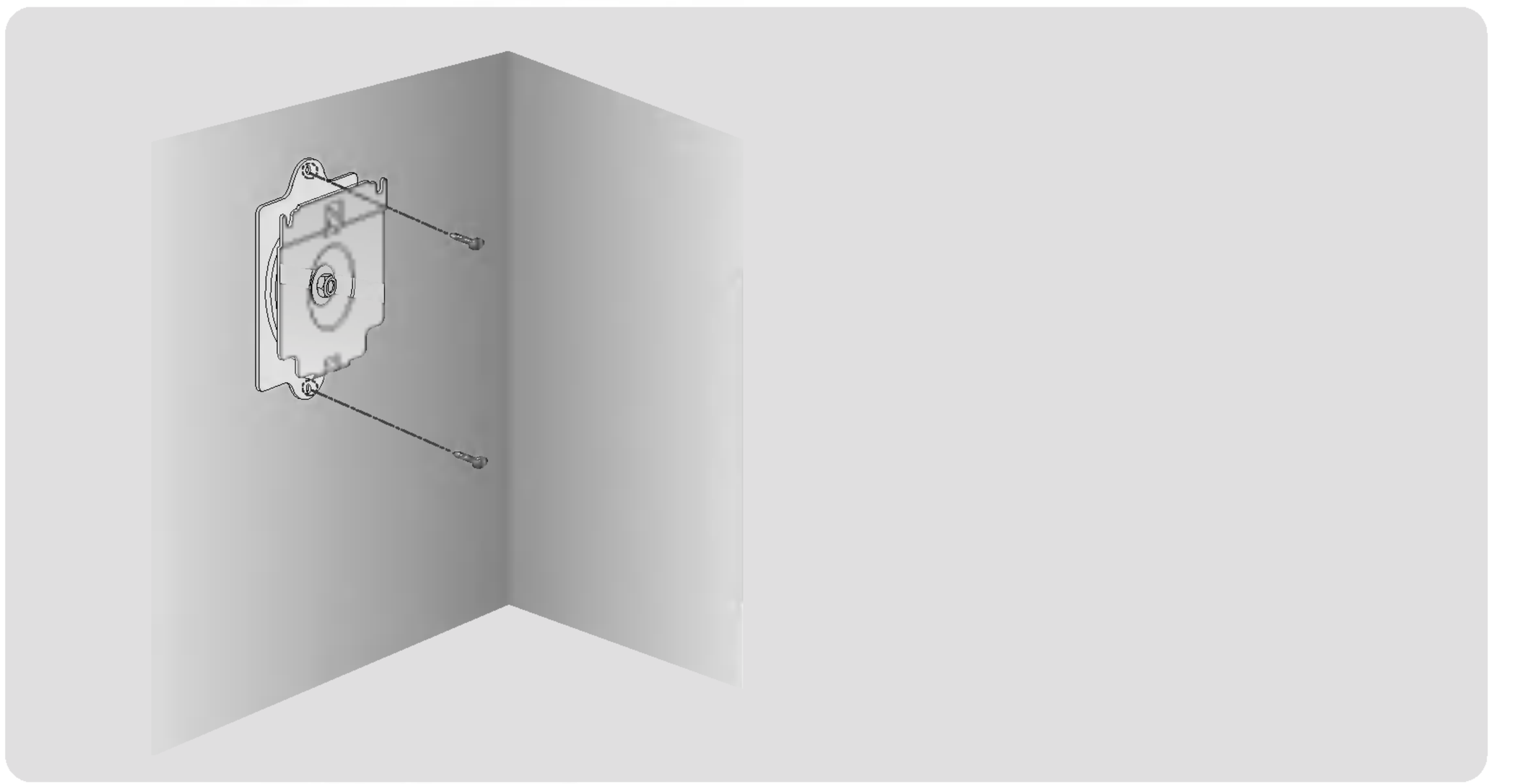

5 Assemble the projector with the wall mounting bracket

- Assemble a projector with the wall mounting bracket installed on the wall as below Fig. Do not install this product by yourself. Get some help from others. It may cause the product to fall and could cause injuries.

a. Hang fixing 2 fixers on a upper groove.

b. Insert the product bracket to the groove of the lower wall mounting bracket.

c. After assembling and fixing the projector, insert the bolts for fixing bracket to the hole.

d. Entirely check the projector fixed as pulling the lower projector.

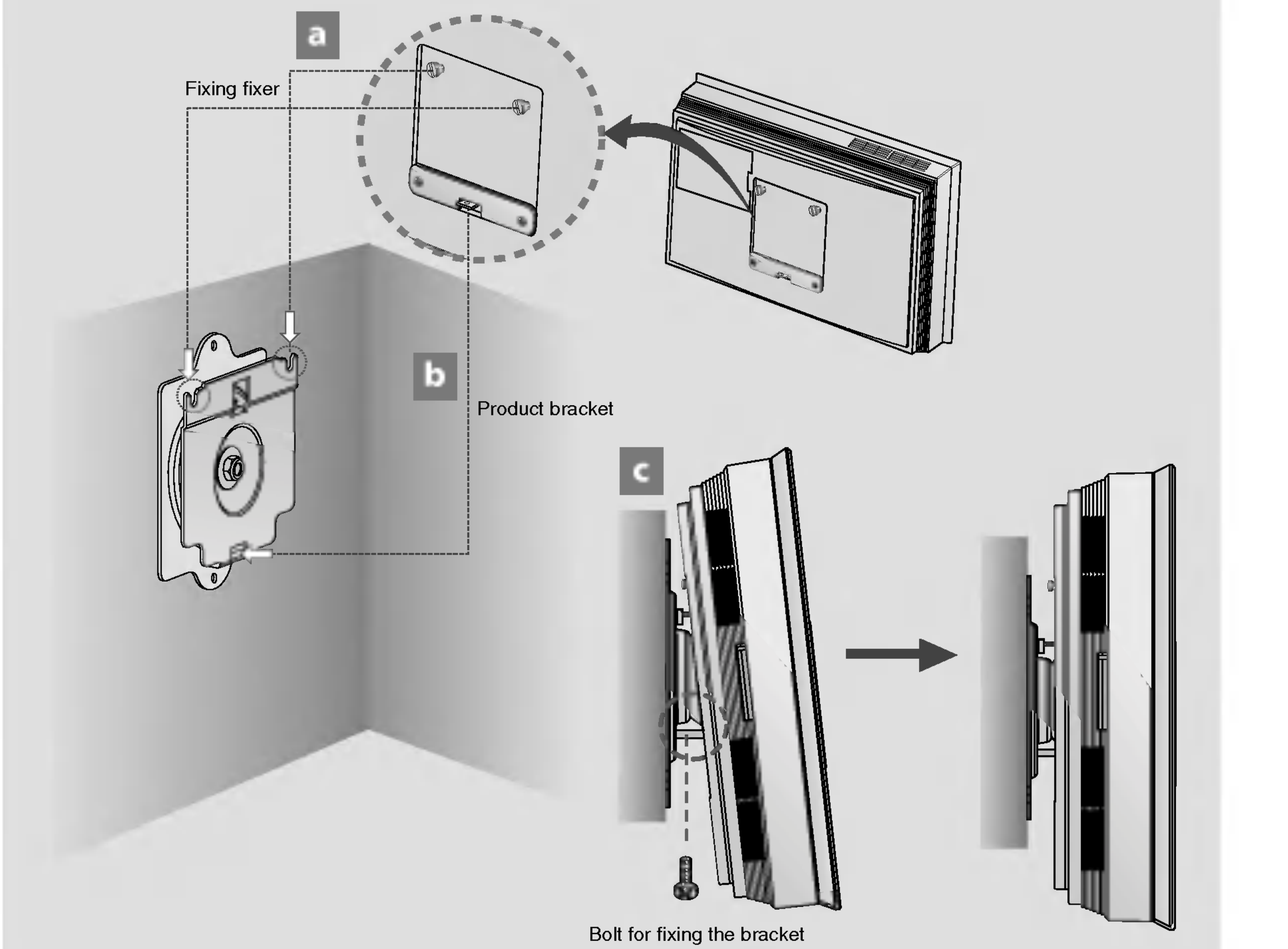

Adjusting Tilt Angle

- Adjustable angle range is 5°(upside/downside/left/right) and turn range is ±10.
- Do not adjust tilt angle with too much force. It may cause damage of product or could cause injuries.

<Adjusting Tilt Angle>

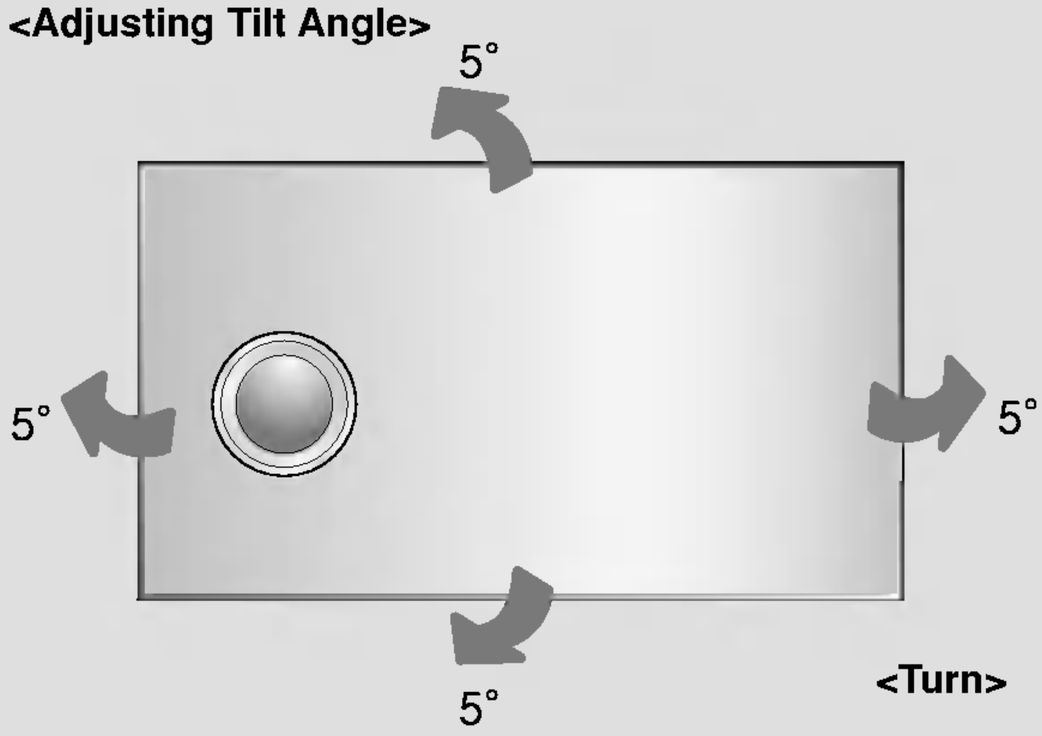

<Turn>

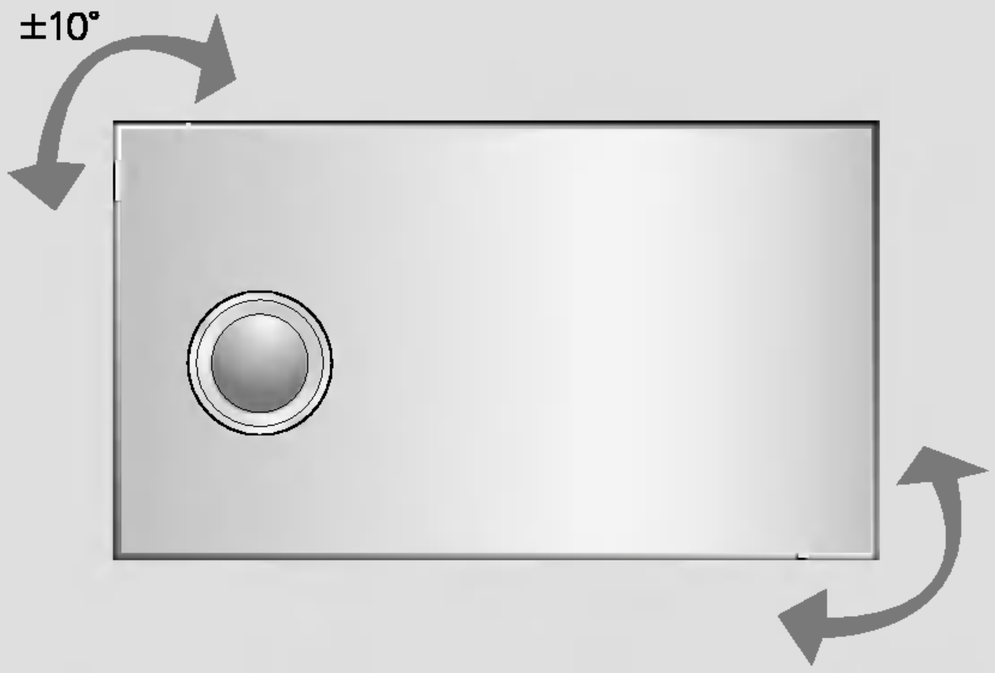

Adequate installation space from the wall

- Leave 16.8 mm between the projector and the wall when installing the wall bracket on the wall.



Turning on the Projector

1. Connect power cord correctly.
2. Press the **POWER** button on the remote control or top cover.
   (Green operation indicator flashes during cooling of the lamp.)
   - When projector is turned on, auto sliding door and shutter are opened, automatically.
   - It will take about 25 second to display the picture after power on because the projector lamp has to warm up.
   - An image will appear after the operation indicator light turns (Green).
   - Select the source mode with the SOURCE button.
   - Leave the projector plugged in for at least 2 minutes after switching off the projector, as this will allow the lamp cooling to continue which will help to preserve the lamp life.

Note!

* Don't unplug the power cord while the ventilation fan (inlet/outlet) is working. If so, you take longer time by lamp on.

Turning off the Projector

1. Press the **POWER** button on the top cover or remote control.

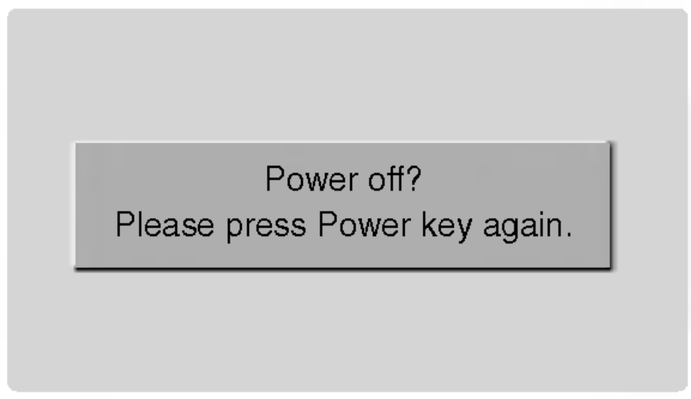

2. Press the **POWER** button on the top cover or remote control again to cut off the power.
3. If the operation indicator LED is orange and blinking, do not disconnect the mains supply until the operation indicator LED is lit up constantly (orange).
   - If the operation indicator LED is orange and blinking, the power button on the top cover or on the remote control will not operate.

Selecting source mode

1. Press the **SOURCE** button.



2. Each press of the ◄, ► button changes the display as below.

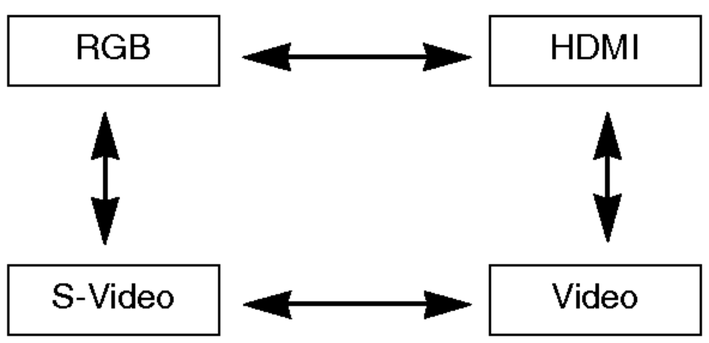

Focus, Zoom, Position of the Screen Image

When an image appears on the screen, check if it is in focus and fits the screen.

- Adjust the focus by using **FOCUS** button of the remote control or the control panel.

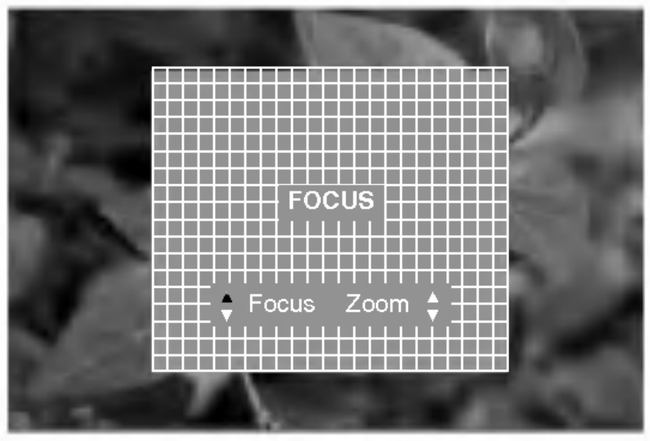

- Adjust the screen size by using **ZOOM** button of the remote control or the control panel.

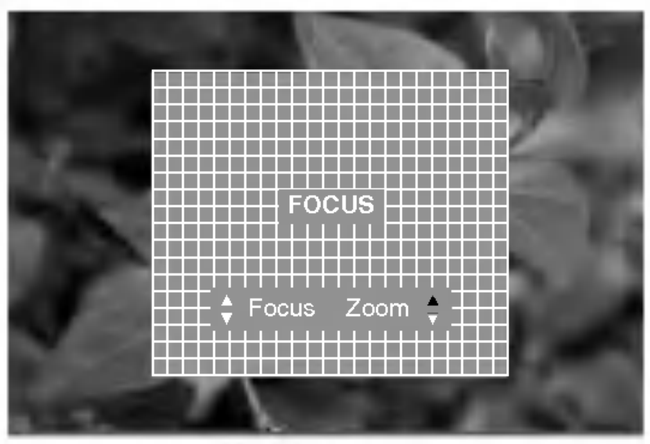

If you want to adjust the screen image to upside/downside, adjust the lens shift as shown below.

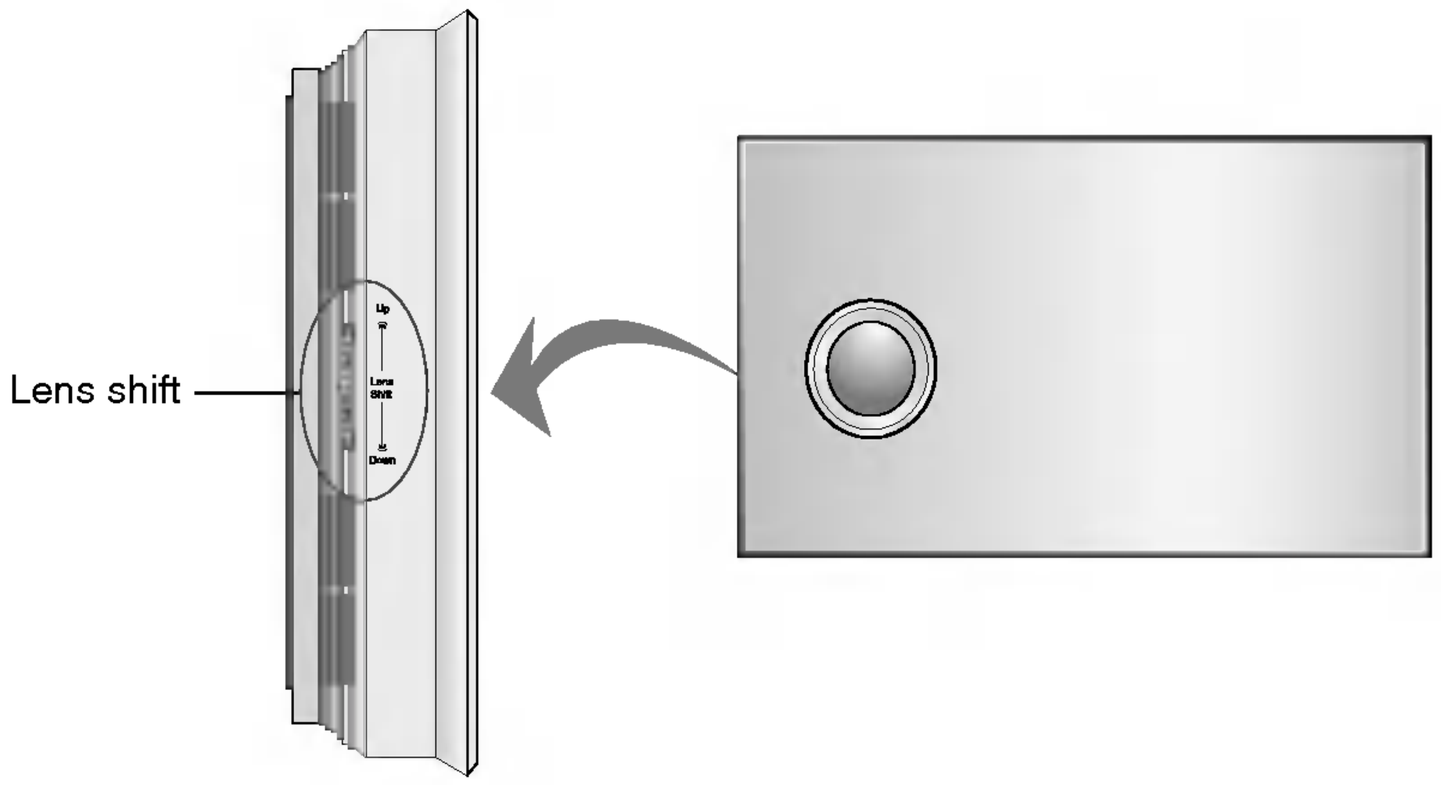

- Adjust the Lens shift to upside/downside the set the wanted position of screen.

Connection

Connecting to a Desktop PC

* You can connect the projector to a computer that has VGA, SVGA, XGA and SXGA output.
* Refer to page 41 for the supported monitor displays of the projector.

< How to connect >

a. Connect computer cable to **RGB Input (PC/DTV)** of the projector.

b. If the PC has HDMI output, connect HDMI to DVI cable to **HDMI** Input of the projector.

* If connecting the HDMI, audio is not supported.

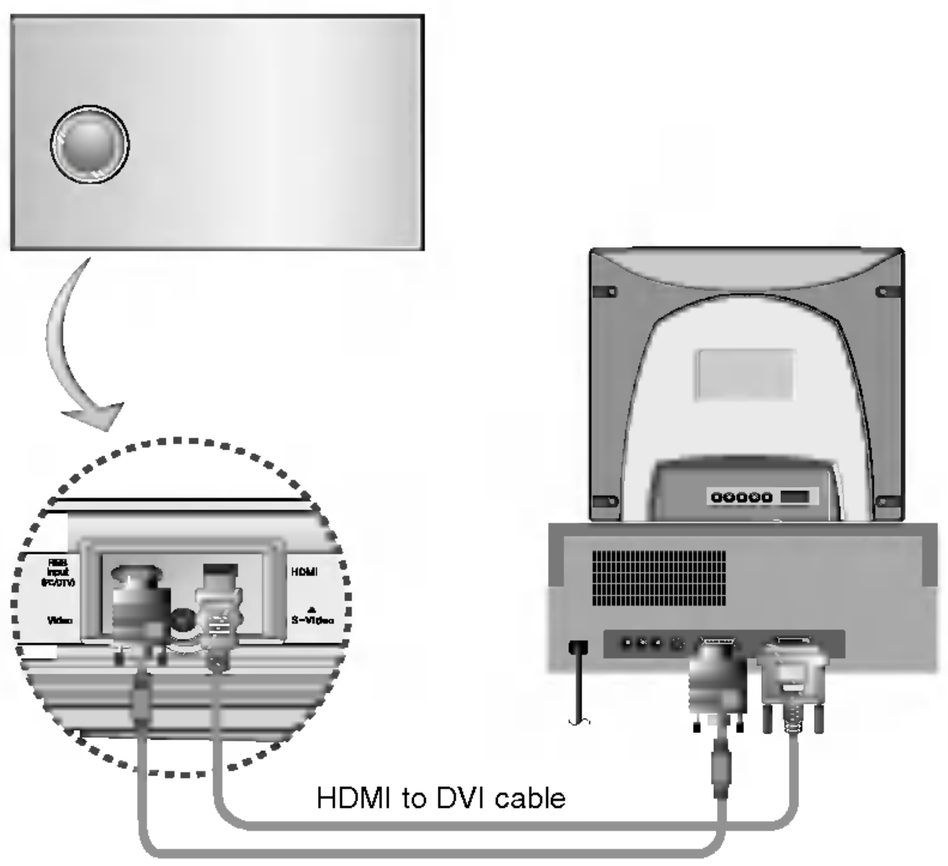

Connecting to a Notebook PC

< How to connect >

- Connect computer cable to **RGB Input (PC/DTV)** of the projector.

* If you set your computer, such as a notebook type IBM PC/AT compatible, to output the signal to both the display of your computer and the external monitor, the picture of the external monitor may not appear properly. In such cases, set the output mode of your computer to output the signal only to the external monitor. For details, refer to the operating instructions supplied with your computer.

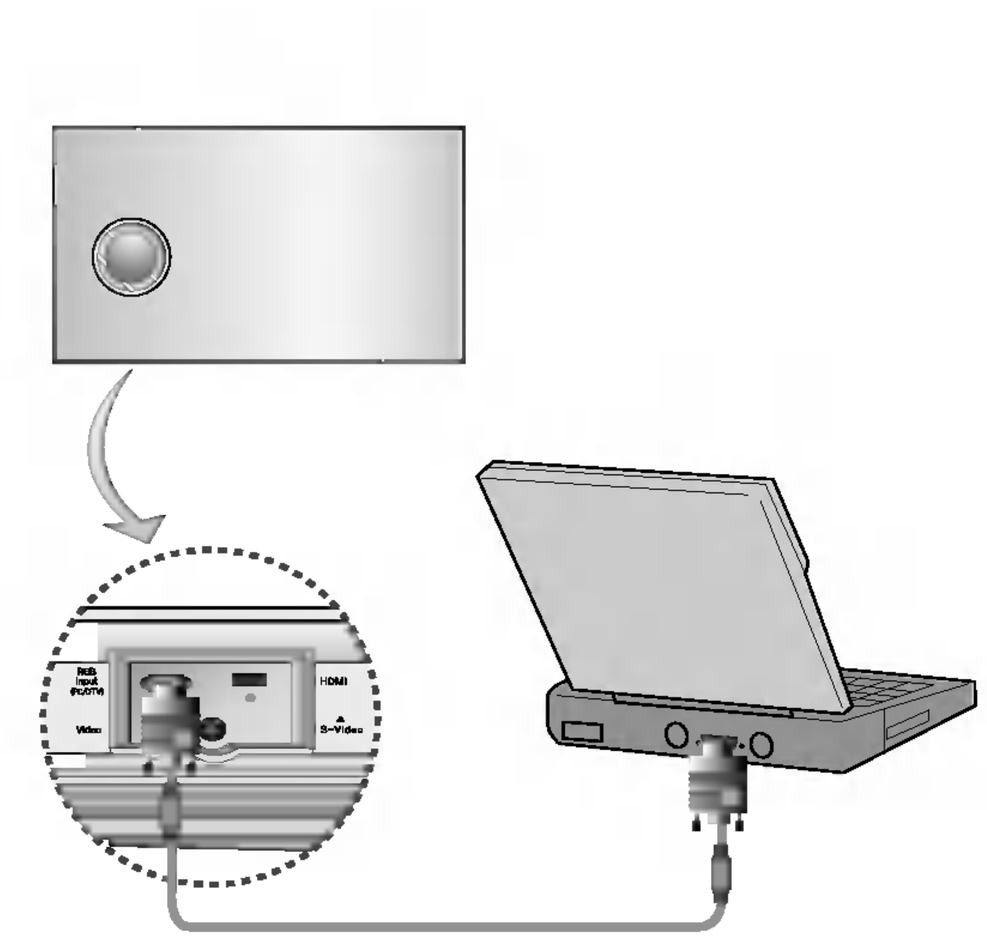

Connecting to a Video Source

* You can connect a VTR, a camcorder, a LDP or any other compatible video image source to the projector.

< How to connect 1 >

a. Connect the Video input jacks of the projector to the output jacks of the A/V source with Video cable.

< How to connect 2 >

b. Connect the S-Video input jack of the projector to the S-Video output jack of an A/V source with an S-Video cable.

* You can get better picture quality when connecting S-Video source to the projector.

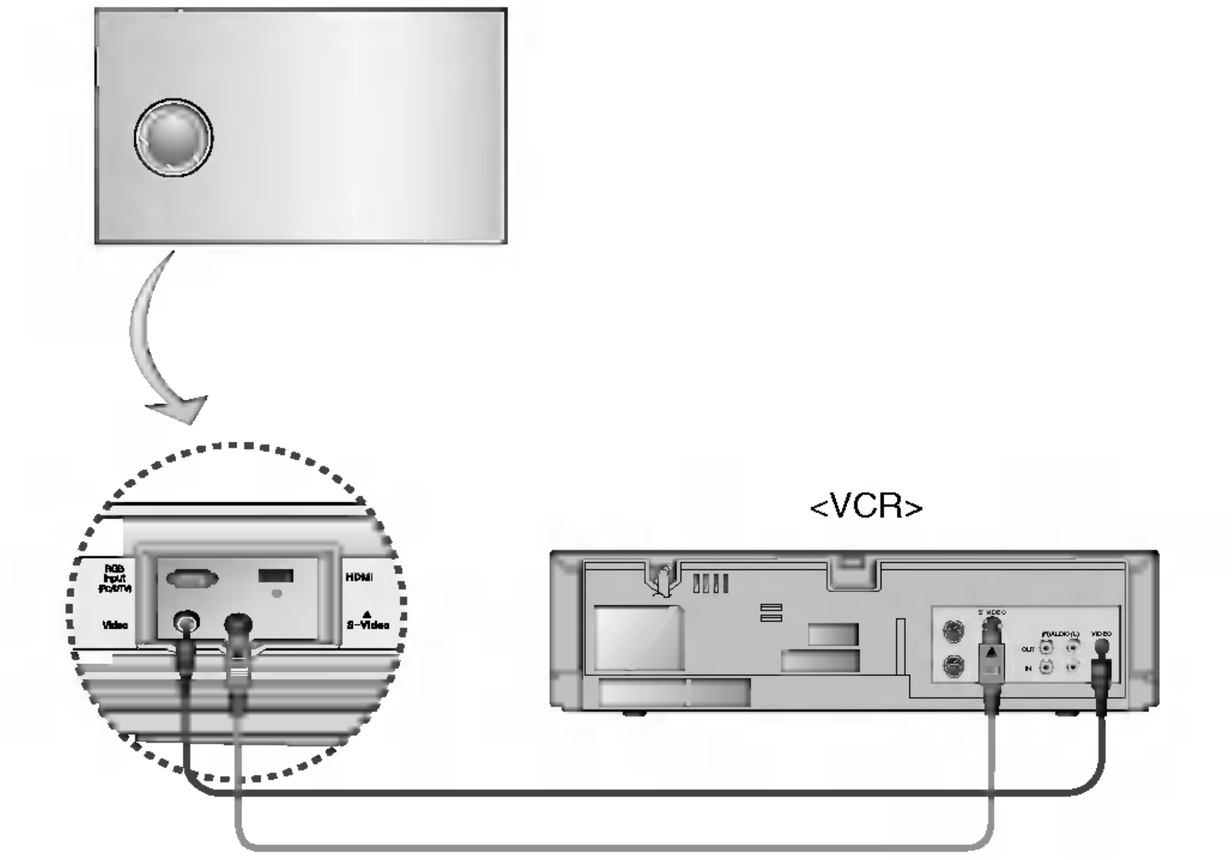

Connecting to a DVD

* The output jacks (Y, P_B, P_R) of the DVD might be labelled as Y, Pb, Pr / Y, B-Y, R-Y / Y, Cb, Cr according to the equipment.

< How to connect >

a. Connect the DVD Component cable to the RCA to D-Sub Adaptor and then connect the RCA to D-Sub Adaptor to **RGB Input (PC/DTV)** of the projector.

* When connecting the component cable, match the jack colors with the component cable.(Y=green, P_B=blue, P_R=red)

b. If the DVD has HDMI output, connect HDMI cable to **HDMI** Input of the projector.

c. If the DVD has DVI output, connect HDMI to DVI cable to **HDMI** Input of the projector.

* If connecting the HDMI, audio is not supported.

d. Use a DVD with Component 480i(576i)/ 480p(576p)/720p/1080i mode.

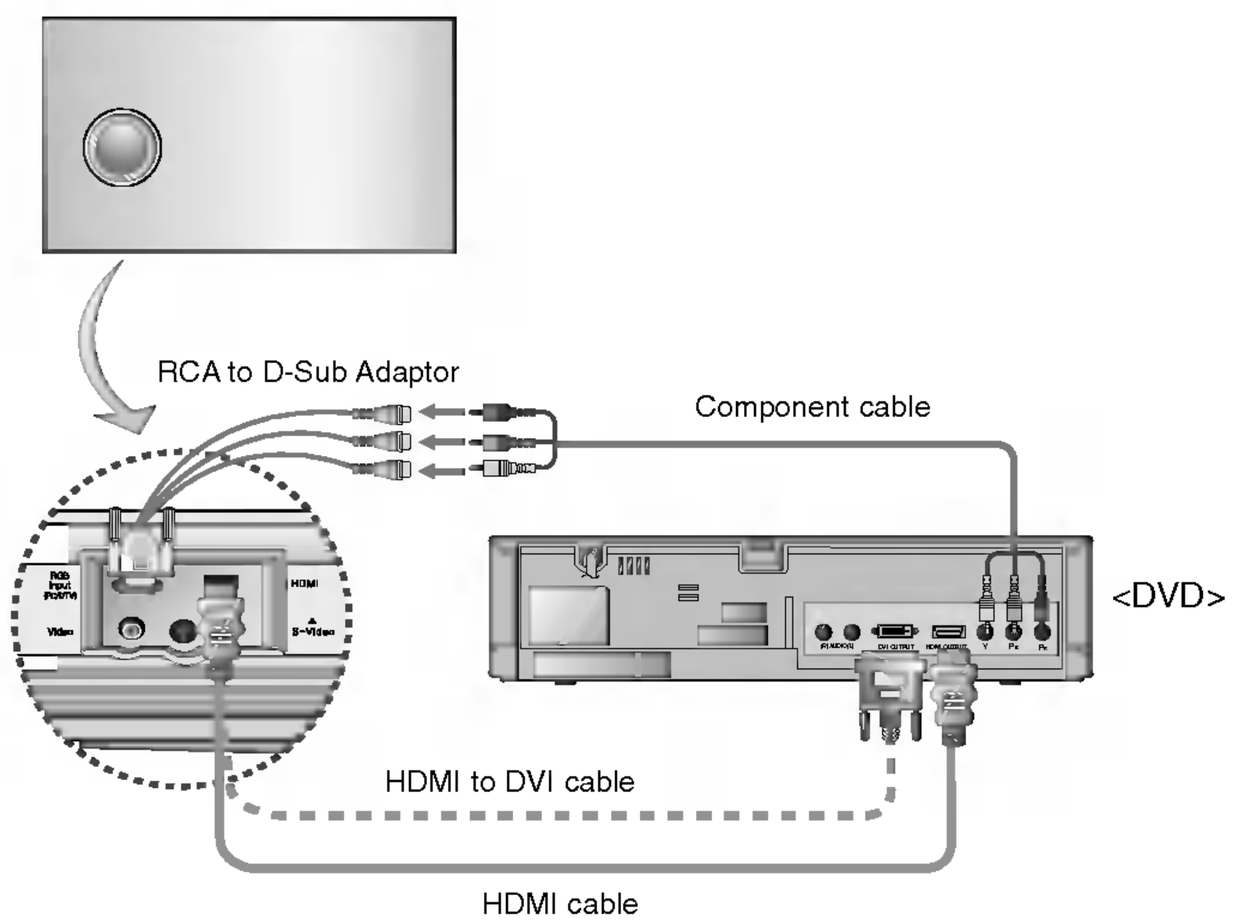

Connecting to a D-TV Set-Top Box

*** To receive Digital TV (D-TV) programs, it is necessary to purchase a D-TV receiver (Set-Top Box) and connect it to the projector.**
*** Please refer to the owner's manual of the D-TV Set-Top Box for the connection between projector and D-TV Set-Top Box.**

< How to connect an RGB/HDMI source >

a. Connect computer cable to **RGB Input (PC/DTV)** of the projector.

b. If the D-TV Set-Top Box has HDMI output, connect HDMI cable to **HDMI** Input of the projector.

c. If the D-TV Set-Top Box has DVI output, connect HDMI to DVI cable to **HDMI** Input of the projector.

* If connecting the HDMI, audio is not supported.

d. Use a DTV receiver with DTV 480p(576p)/ 720p/1080i mode.

* It can be supported the DVI/HDCP.

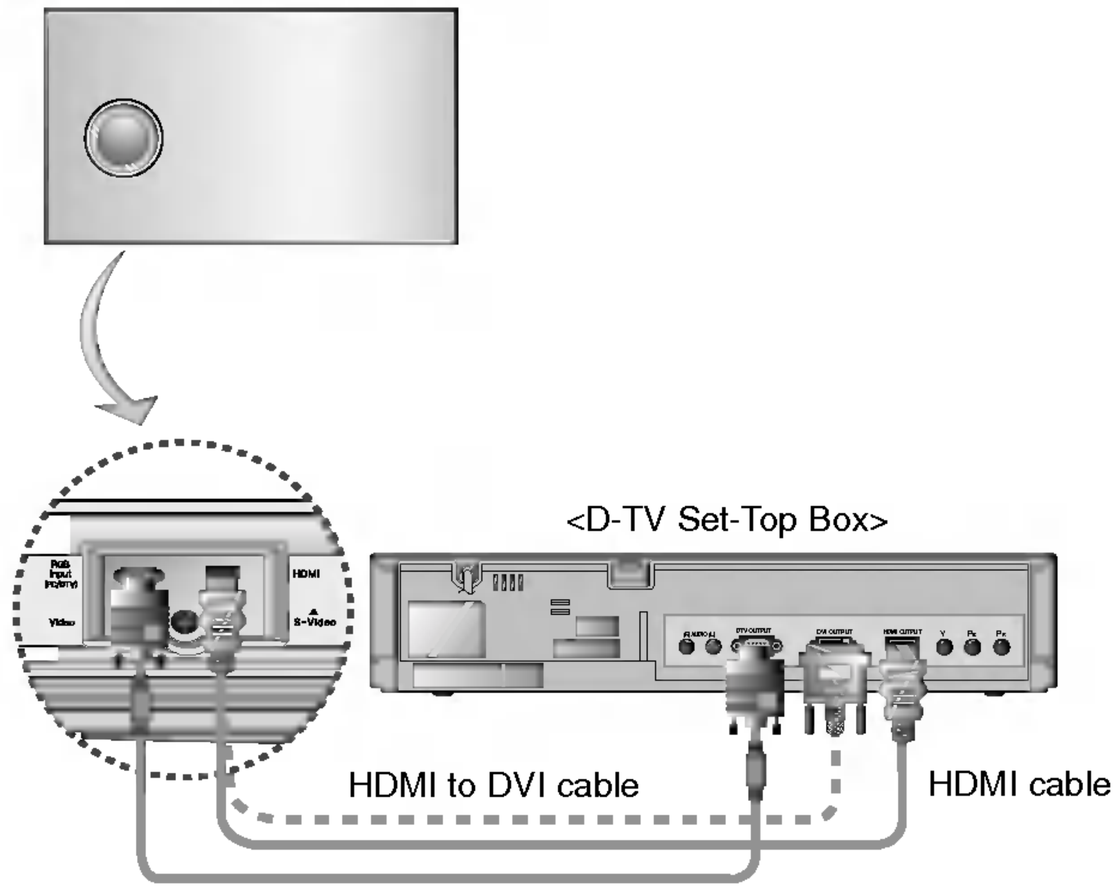

< How to connect a Component source >

a. Connect the D-TV Set-Top Box Component cable to the RCA to D-Sub Adaptor and then connect the RCA to D-Sub Adaptor to **RGB Input (PC/DTV)** of the projector.

* When connecting the component cable, match the jack colors with the component cable.(Y=green, P_B=blue, P_R=red)

b. Use a DTV receiver with DTV 480p(576p)/ 720p/1080i mode.

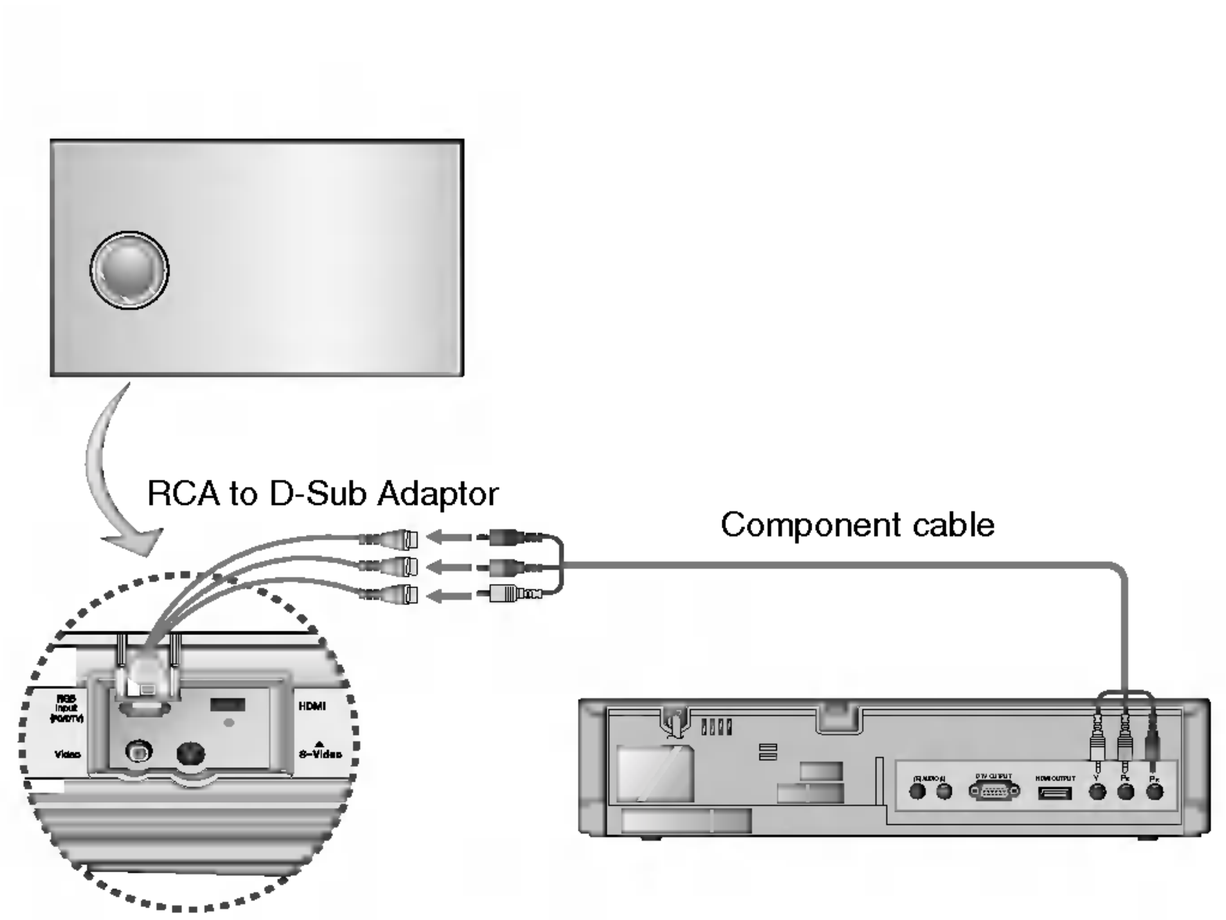

HDMI

HDMI™
HIGH DEFINITION MULTIMEDIA INTERFACE

- HDMI™, the HDMI logo and High-Definition Multimedia Interface is a trademark or registered trademark of HDMI Licensing."
- This TV can receive the High-Definition Multimedia Interface(HDMI) or the Digital Visual Interface(DVI).
- This TV supports HDCP(High-bandwidth Digital Contents Protection) Protocol for 720x480p, 1280x720p, and 1920x1080i resolution.
- When you connect this TV with a source device(DVD player, Set Top Box or PC) supporting Auto HDMI/DVI function, the output resolution of the source device will be automatically set to 1280x720p.
- If the source device does not support Auto HDMI1/DVI, you need to set the output resolution appropriately.
- If the source device has a DVI output and no HDMI output, a separated audio connection is necessary.

< How to connect >

1. When the source device (DVD player or Set Top Box) supports HDMI

- Connect the source device to HDMI1/DVI or HDMI2 port of this TV with an HDMI cable(not supplied with this product).
- If the source device supports Auto HDMI function, the output resolution of the source device will be automatically set to 1280x720p. If the source device does not support Auto HDMI, you need to set the output resolution appropriately.
- To get the best picture quality, adjust the DVD Player or Set Top Box's output resolution to 1280x720p, and the PC graphics card's output resolution to 1024x768, 60Hz.
- If the source device has an HDMI output, no other audio connection is necessary because HDMI-to-HDMI connection includes both video and audio.
  But a separated audio connection is necessary.

2. When the source device(DVD player or Set Top Box) supports DVI

- Connect the source device to HDMI1/DVI port of this TV with a HDMI-to-DVI cable(not supplied with this product). Do not use HDMI2 port for DVI connection if you want to connect audio.
- If the source device supports Auto DVI function, the output resolution of the source device will be automatically set to 1280x720p. If the source device does not support Auto DVI, you need to set the output resolution appropriately.
- To get the best picture quality, adjust the DVD Player or Set Top Box's output resolution to 1280x720p, and the PC graphics card's output resolution to 1024x768, 60Hz.
- A separated audio connection is necessary.

3. When the computer supports DVI

-If the computer has an DVi output, connect the source device to HDMI of this DTV with a DVI cable.
-To get the best picture quality, adjust the PC mode the 1024x768, 60Hz.

< HDMI Accessories >

- HDMI cable is not supplied with the product.


HDMI Cable


HDMI to DVI Cable

Function

*** In this manual, the OSD(On Screen Display) may be different from your Projector's because it is just example to help with the Projector operation.**
* If there is no input signal present, the Menu will not be displayed on the screen.
* This operating guide explains operation of RGB(PC) mode mainly.

Video Menu Options

Adjusting Video

1. Press the **MENU** button and then use ▲, ▼ button to select the ■ menu.

2. Press the ► button and then use ▲ , ▼ button to select a video item you want to adjust.

3. Press the ◄, ► button to adjust the screen condition as you want.

4. Press the ■**OK** button to save.

   - Each adjustment of ■ menu options will not affect other input source. As required, re-adjust ■ menu options for the following input source : Video/S-Video/Component (480i(576i)), Component (480p(576p), 720p, 1080i)
   - To restore the original image condition after changing it, press ■**OK** button after selecting [**Reset**] item.
   - In the broadcasting system NTSC, the picture item **Tint** is displayed and can be adjusted.
   - To exit the menu display, repeatedly, press the **MENU** button.

< RGB mode >

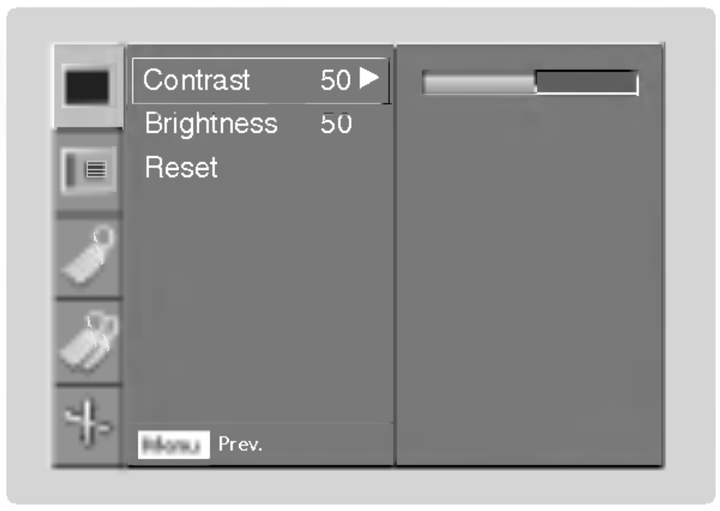

< Video mode >

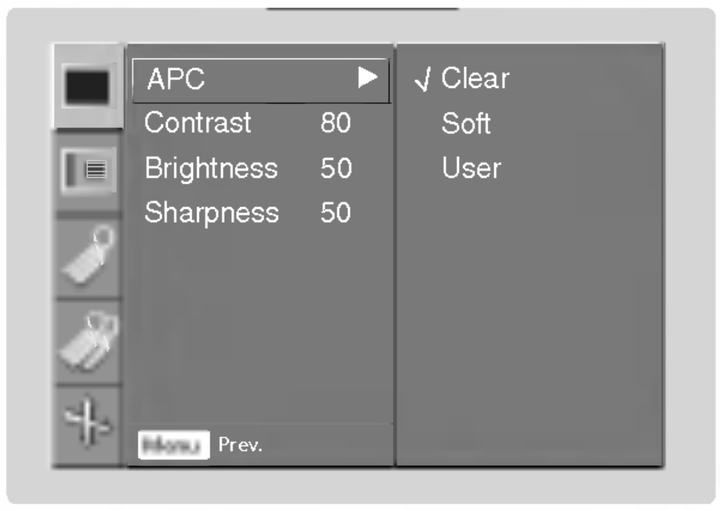

APC (Auto Picture Control)

* Use APC to set the projector for the best picture appearance.
* This function will not work in RGB mode.

1. Press the **MENU** button and then use ▲, ▼ button to select the ■ menu.

2. Press the ► button and then use ▲ , ▼ button to select **APC** item.

3. Press the ► button and then use ▲ , ▼ button to adjust the screen condition as you want.

4. Press the ■**OK** button to save.

   - Each press of the ▲, ▼ button changes the screen as shown below.

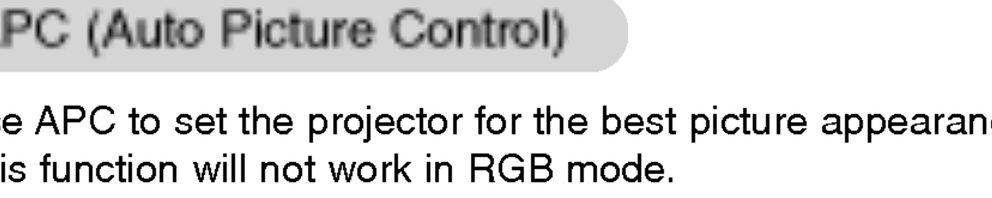

   - To exit the menu display, repeatedly, press the **MENU** button.

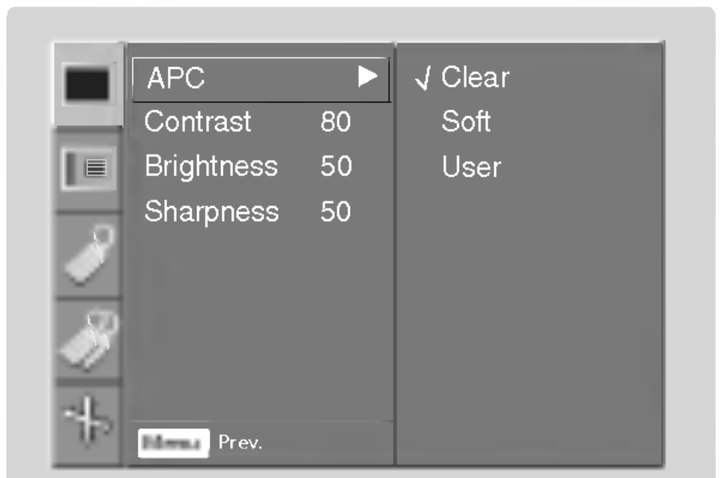

Auto Color Temperature Control

- To initialize values (reset to default settings), select the **Normal** option.

1. Press the **MENU** button and then use ▲, ▼ button to select the menu.
2. Press the ► button and then use ▲ , ▼ button to select **ACC** item.
3. Press the ► button and then use ▲ , ▼ button to make appropriate adjustments.
4. Press the ■**OK** button to save.

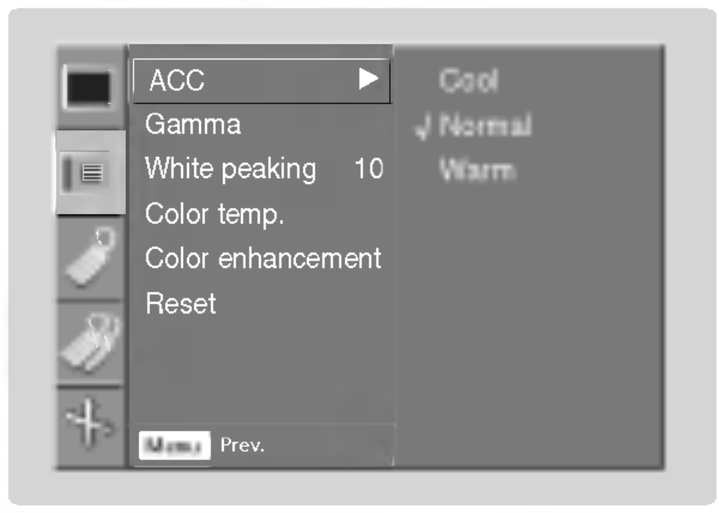

- Each press of the ▲, ▼ button changes the screen as shown below.

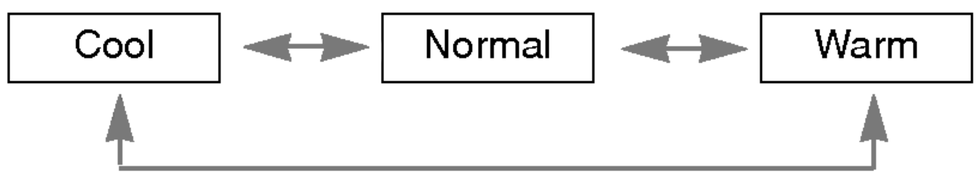

- To exit the menu display, repeatedly, press the **MENU** button.

Gamma Function

1. Press the **MENU** button and then use ▲, ▼ button to select the menu.
2. Press the ► button and then use ▲ , ▼ button to select **Gamma** item.
3. Press the ► button and then use ▲ , ▼ button to adjust the screen condition as you want.
4. Press the ■**OK** button to save.

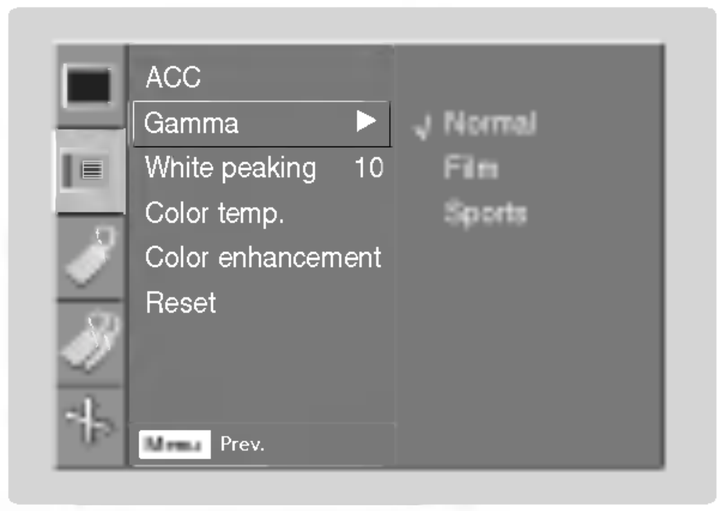

- Each press of the ▲, ▼ button changes the screen as shown below.



- To exit the menu display, repeatedly, press the **MENU** button.

White peaking Function

1. Press the **MENU** button and then use ▲, ▼ button to select the menu.
2. Press the ► button and then use ▲ , ▼ button to select **White peaking** item.
3. Press the ◄, ► button to adjust the screen condition as you want.
4. Press the ■**OK** button to save.
   - It's available to adjust [White peaking] in RGB(PC) and HDMI(DVI) mode only.
   - The default value may changed based on input mode.
   - Adjust to higher value to see the bright picture and adjust to lower value to see the quality picture.
   - To exit the menu display, repeatedly, press the **MENU** button.

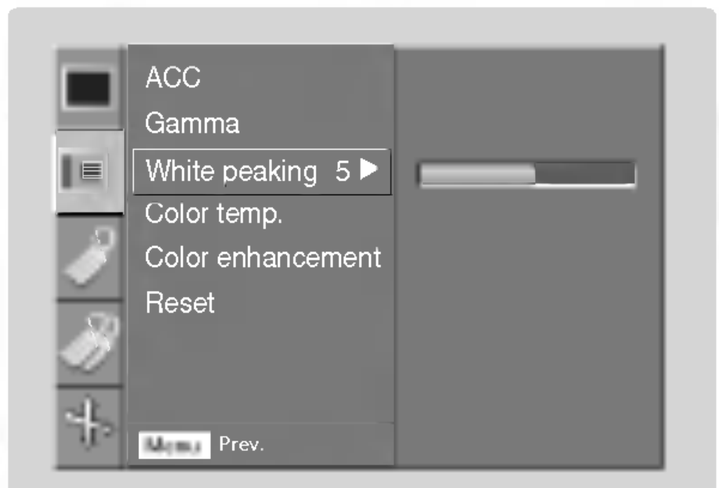

Color Temperature Control

* You can adjust color to any color temperature you prefer.

1. Press the **MENU** button and then use ▲, ▼ button to select the menu.
2. Press the ► button and then use ▲ , ▼ button to select **Color temp.** item.
3. Press the ► button and then use ▲ , ▼ button to select **Gain R**, **Gain G**, **Gain B** or **Offset R**, **Offset G**, **Offset B**.
4. Use the ◄, ► button to make appropriate adjustments.
   - The **Gain R**, **Gain G**, **Gain B** adjustment range is 0 ~ 100.
   - The **Offset R**, **Offset G**,**Offset B** adjustment range is -50 ~ +50.
5. Press the ■**OK** button to save.
   - To exit the menu display, repeatedly, press the **MENU** button.

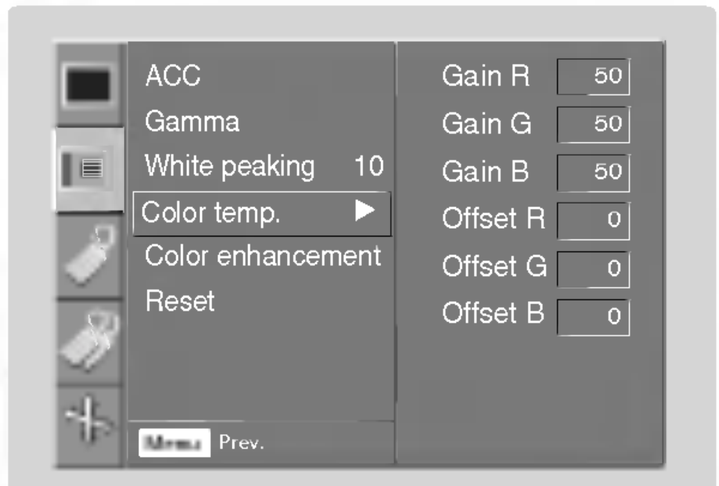

Color enhancement Control

* You can adjust color to any color enhancement you prefer.

1. Press the **MENU** button and then use ▲, ▼ button to select the menu.
2. Press the ► button and then use ▲ , ▼ button to select **Color enhancement** item.
3. Press the ► button and then use ▲ , ▼ button to select **Color**, **Red**, **Green** or **Blue**, **Yellow**, **Cyan**, **Magenta**.
4. Use the ◄, ► button to adjust the screen condition as you want.
   - The adjustment range of **Color**, **Red**, **Green** and **Blue**, **Yellow**, **Cyan**, **Magenta** is 0~ 100.
5. Press the ■**OK** button to save.
   - To exit the menu display, repeatedly, press the **MENU** button.

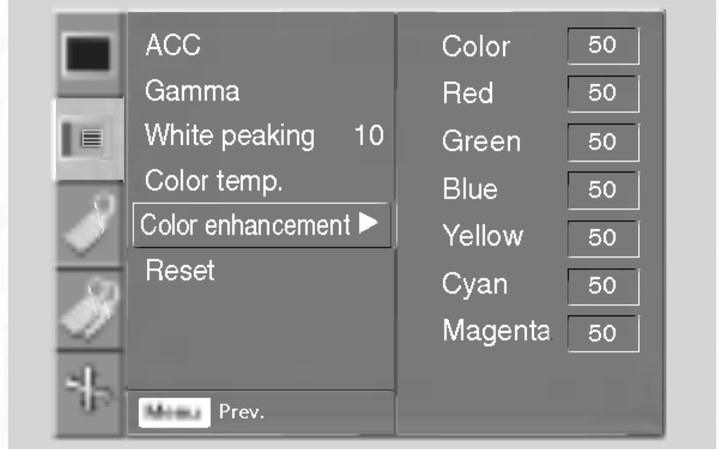

Reset (Reset to original factory value)

- To restore the original image condition after changing it, press ■**OK** button after selecting [**Reset**] item.

Special Menu Options

Selecting Language

1. Press the **MENU** button and then use ▲, ▼ button to select the menu.



2. Press the ► button and then use ▲ , ▼ button to select **Language** item.

3. Press the ► button and then use ▲ , ▼ button to select the language you want to use.

4. Press the ■**OK** button to save.

- On-Screen-Display (OSD) is marked in the selected language from this point.
- To exit the menu display, repeatedly, press the **MENU** button.

Using ARC Function

1. Press the **ARC** button.
   Each press of the button changes the display as below.

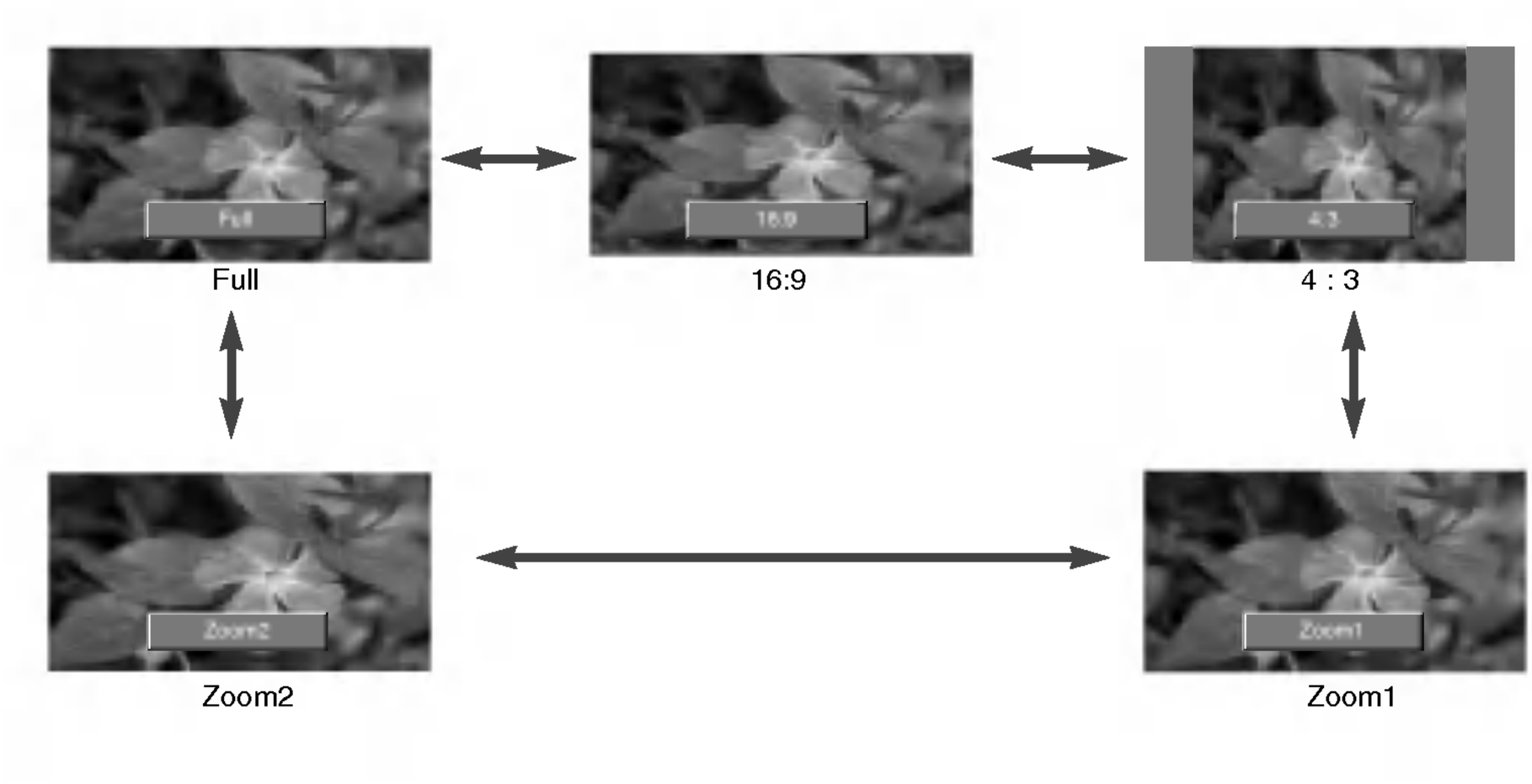

Full
16:9
4 : 3
Zoom2
Zoom1

Note!

You can also use this function by using the **MENU** button.

Flip horizontal Function

* This function reverses the projected image horizontally.
  Use this function when rear projecting an image.

1. Press the **MENU** button and then use ▲, ▼ button to select the menu.
2. Press the ► button and then use ▲ , ▼ button to select **Flip horizontal** item.
3. Press the ► button to see reversed image.

- Each time you press the ► button, the image will be reversed.
- To exit the menu display, repeatedly, press the **MENU** button.

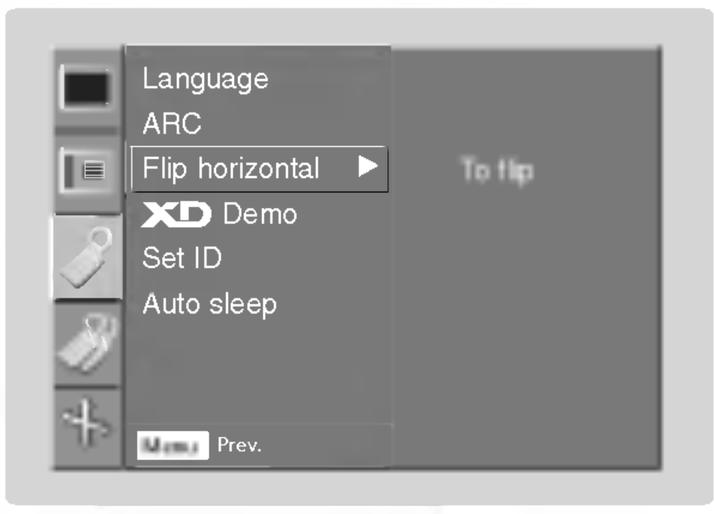

XD Demo

* Use it to see the difference between XD Demo on and XD Demo off.

1. Press the **MENU** button and then use ▲, ▼ button to select the menu.
2. Press the ► button and then use ▲ , ▼ button to select **XD Demo** item.
3. Press the ► button to begin **XD Demo**.
4. Press the **MENU** button to stop **XD Demo**.

- To exit the menu display, repeatedly, press the **MENU** button.

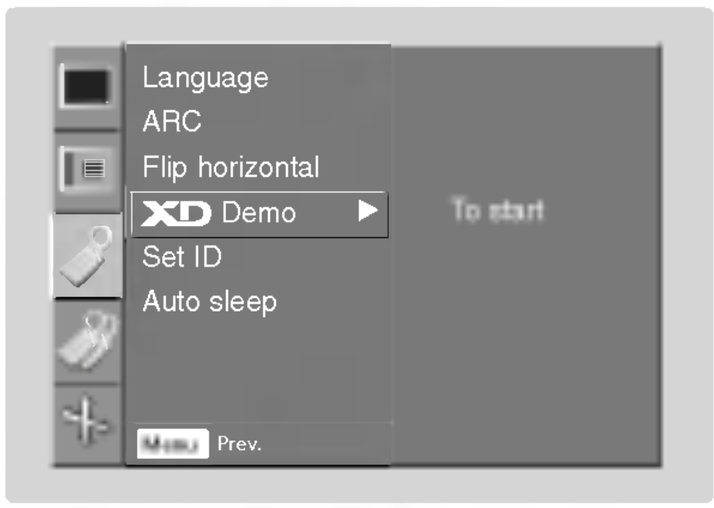

Auto sleep Function

* The sleep timer turns the projector off at the preset time.

1. Press the **MENU** button and then use ▲, ▼ button to select the menu.
2. Press the ► button and then use ▲ , ▼ button to select **Auto sleep** item.
3. Press the ► button and then use ▲ , ▼ button to select the wanted preset time.
4. Press the ■**OK** button to save.

- To exit the menu display, repeatedly, press the **MENU** button.

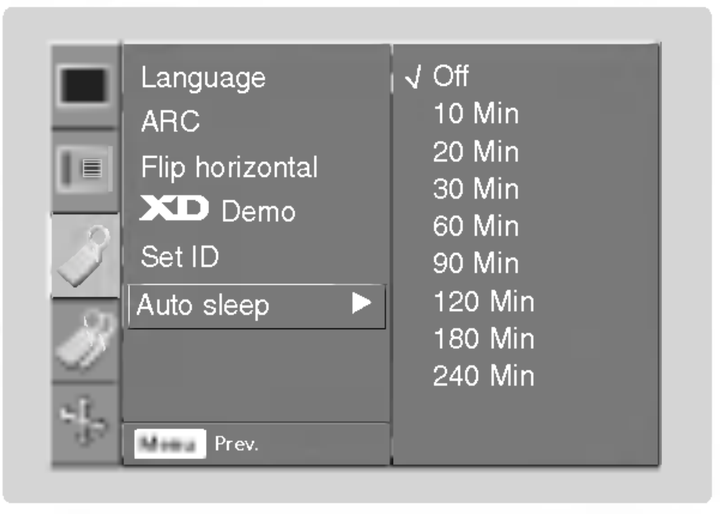

Special Menu Options

Using Keystone function

* Use this function when the screen is not at a right angle to the projector and the image is a trapezoid shape.
* Only use the **Keystone** function when you can't get the best angle of projection, because it may cause a blazing fire of the screen.

1. Press the **KEYSTONE +** or **KEYSTONE -** button.

2. Press the **KEYSTONE +** or **KEYSTONE -** button to adjust the screen condition as you want.

   - **Keystone** are adjusted from -20 to +20.
   - You can also use this function by using the **MENU** button.



Using Blank function

* This function may be effective if you need to get attention of the audience during presentations, meetings or briefings.

1. Press the **BLANK** button.
   - The screen turns off to a background color.
   - You can choose the background color.
     (Refer to **'Selecting blank image color'**)

2. Press any button to cancel the blank function.

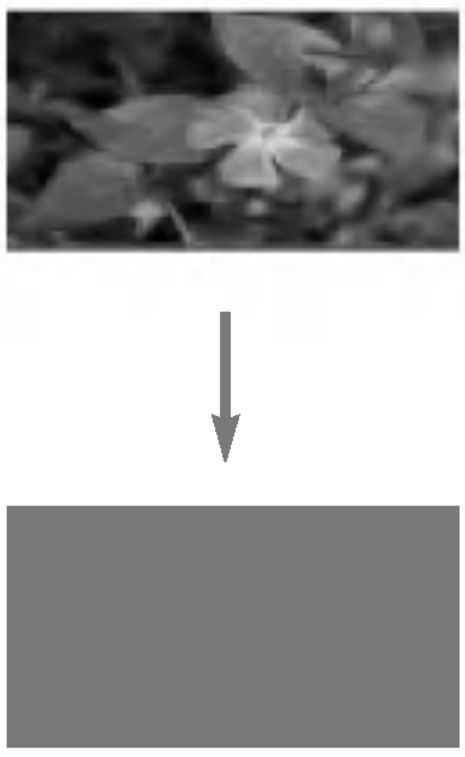

Selecting Blank image color

1. Press the **MENU** button and then use ▲, ▼ button to select the menu.
2. Press the ► button and then use ▲ , ▼ button to select **Blank image** item.
3. Press the ► button and then use ▲ , ▼ button to select the color you want to use.
4. Press the ■**OK** button to save.
   - Background color will be changed to the selected Blank function color from this point.
   - To exit the menu display, repeatedly, press the **MENU** button.

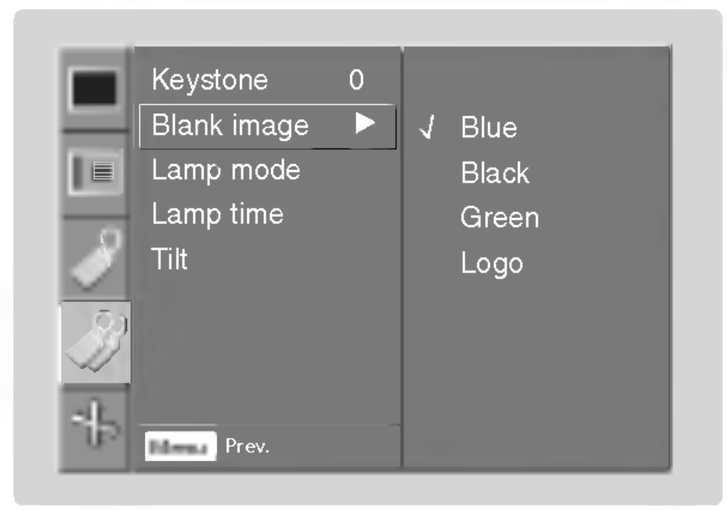

Lamp mode Function

1. Press the **MENU** button and then use ▲, ▼ button to select the menu.
2. Press the ► button and then use ▲ , ▼ button to select **Lamp mode** item.
3. Press the ► button and then use ▲ , ▼ button to select **Normal mode** or **Silent mode**.
4. Press the ■**OK** button to save.
   - To exit the menu display, repeatedly, press the **MENU** button.

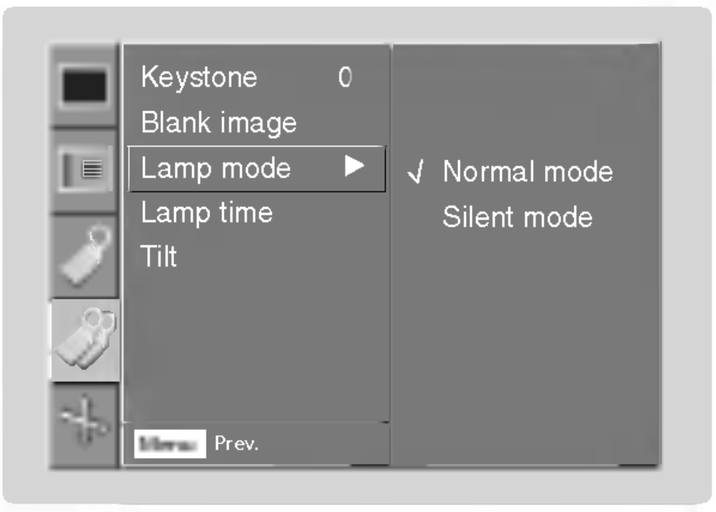

Checking Lamp time

1. Press the **MENU** button and then use ▲, ▼ button to select the menu.
2. Press the ► button and then use ▲ , ▼ button to select **Lamp time** item.
   - The used lamp time is displayed.
   - When projector lamp is reaching the end of its life (over 4000 hours), the lamp indicator will be turned red.
   - The lamp warning LED illuminates red continuously in the case of excessive lamp time.
   - To exit the menu display, repeatedly, press the **MENU** button.

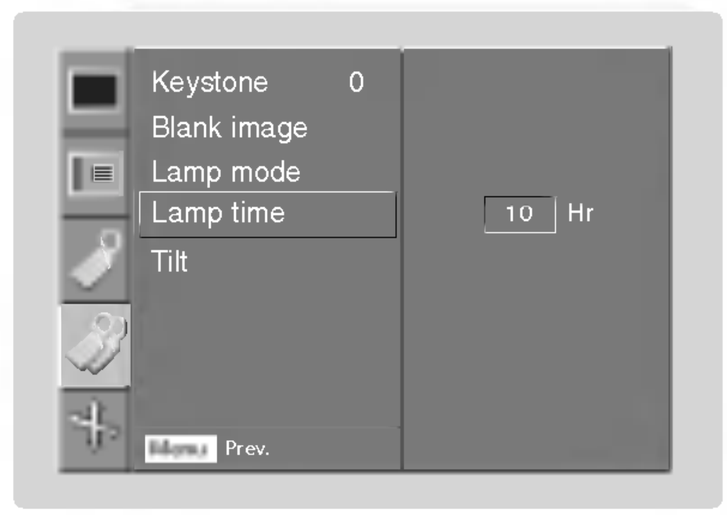

Tilt function

1. Press the **MENU** button and then use ▲, ▼ button to select the menu.

2. Press the ► button and then use ▲ , ▼ button to select **Tilt** item.

3. You can check tilt state of the projector.

   - If tilt state is out of the safety area(avobe 15°), warning message is displayed and then automatically, power turns off.
   - To exit the menu display, repeatedly, press the **MENU** button.

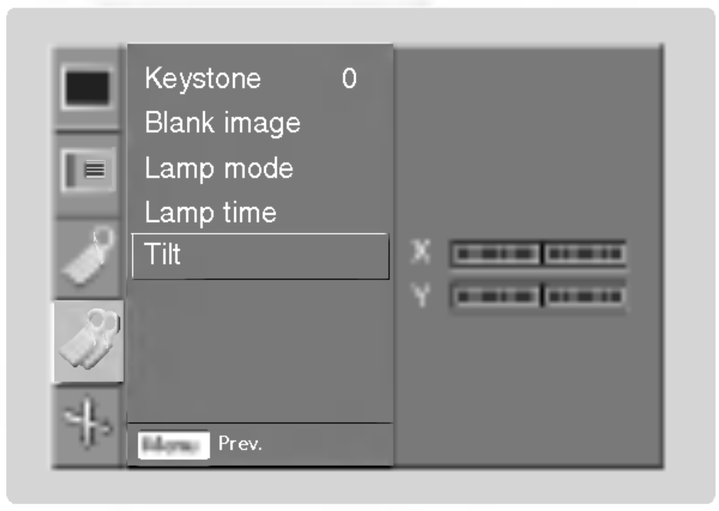

Using Still function

1. Press the **STILL** button.

   * You can freeze the input image.



<Moving Image>





<Still Image>

2. To exit Pause, press any button .

   * The STILL function would release automatically after about 10 minutes.

Screen Menu Options

Auto configure Function

* This function assures you of getting the best video quality by automatically adjusting the difference of horizontal size and synchronization of the image.
* Auto Tracking function works in RGB input only.

1. Press the **AUTO** button.
   - Image positioning and synchronization are automatically adjusted.

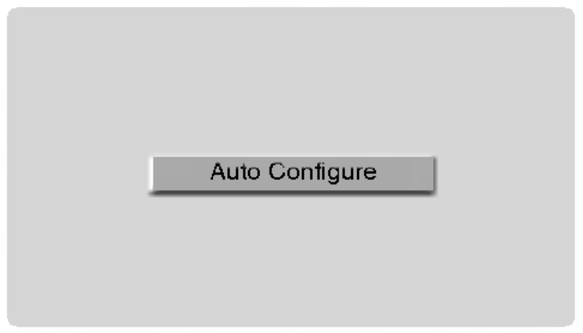

2. Adjust **Manual configure** in menu after operation of **Auto configure** if you want to get better picture quality in accordance with diverse PC input modes. In certain circumstances, you can't get the best picture quality only with auto-correction.

Note!

You can also use this function by using the MENU button. (Only in RGB mode)

For best results, perform this function while displaying a still image.

Manual configure

* It's available to adjust [Manual Configure] in RGB mode only.
* **Phase Function**
  This function is for the detailed adjustment of the clock function.
* **Clock Function**
  This function adjusts the horizontal width of the projected image to get the image to fit on the screen size.

1. Press the **MENU** button and then use ▲, ▼ button to select the menu.

2. Press the ► button and then use ▲ , ▼ button to select **Manual configure** item.

3. Press the ► button and then use ▲ , ▼ button to select **Phase**, **Clock**, **H Position** or **V Position**.

4. Press the ◄, ► button to adjust the screen condition.

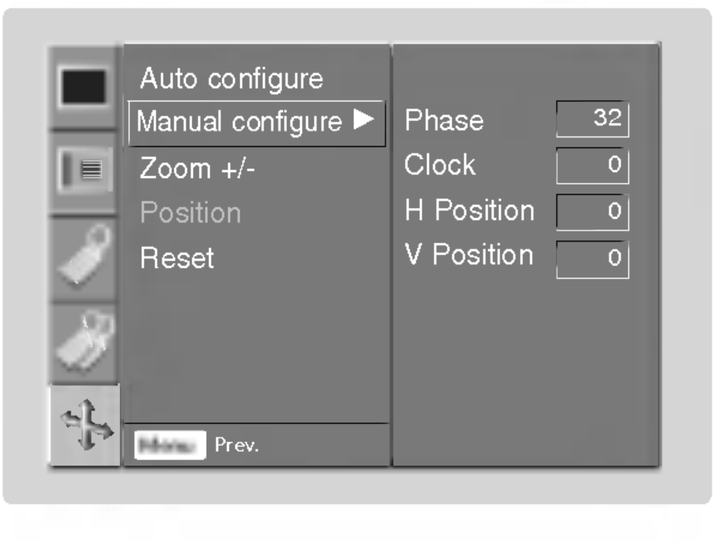

   - The **Phase** adjustment range is 0 ~ 63.
   - The **Clock** adjustment range is -50 ~ +50.
   - Based on the input mode, the adjustment range may be changed.

5. Press the ■**OK** button to save.
   - To exit the menu display, repeatedly, press the **MENU** button.

Using ZOOM function

1. Press the **MENU** button and then use ▲, ▼ button to select the menu.
2. Press the ► button and then use ▲ , ▼ button to select **Zoom +/-** item.
3. Press the ► button and then use ◄, ► button to zoom in or out the picture size condition as you want.

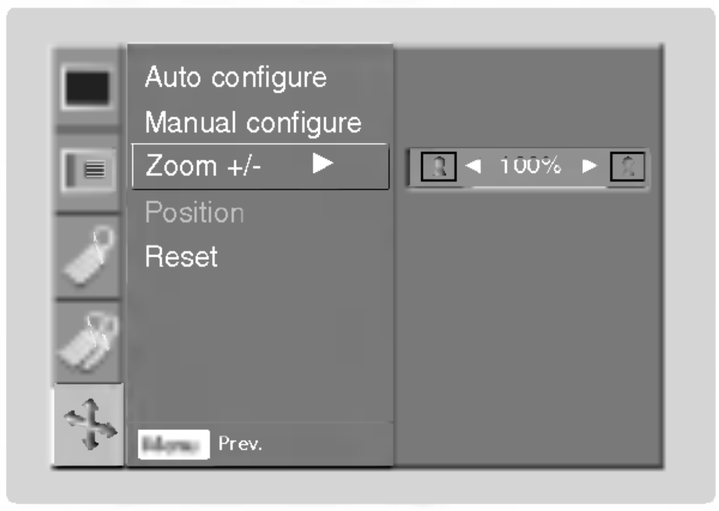

- **Zoom +/-** adjustment range is 100% ~ 250%.
- To exit the menu display, repeatedly, press the **MENU** button.

Screen Position

* You are available o this function after adjusting Zoom +/-.

1. Press the **MENU** button and then use ▲, ▼ button to select the menu.
2. Press the ► button and then use ▲ , ▼ button to select **Position** item.
3. Press the ► button and then use ▲, ▼, ◄, ► button to adjust the position.
4. Press the ■**OK** button to save.

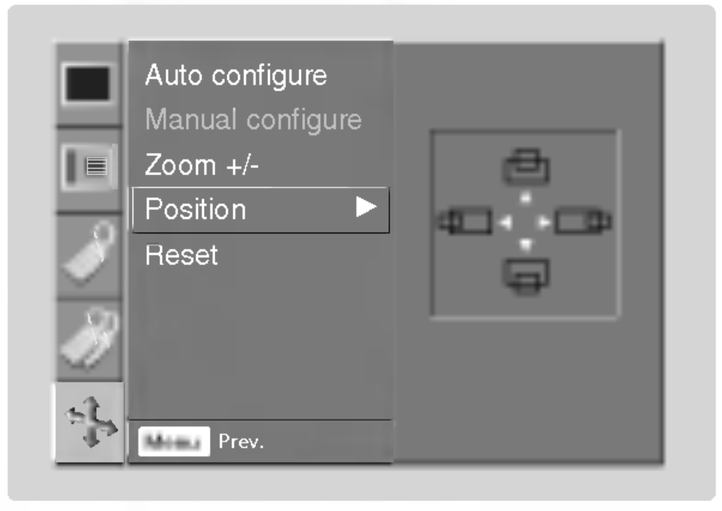

- To exit the menu display, repeatedly, press the **MENU** button.

Reset (Reset to original factory value)

- To restore the original image condition after changing it, press ■**OK** button after selecting [**Reset**] item.
- You can initialize Manual configure, Zoom +/-, Position.

External Control Device Setup

* Connect the RS-232C input jack to an external control device (such as a computer or a video control system) and control the Projector's functions externally.

SET ID

1. Press the **MENU** button and then use ▲, ▼ button to select the menu.

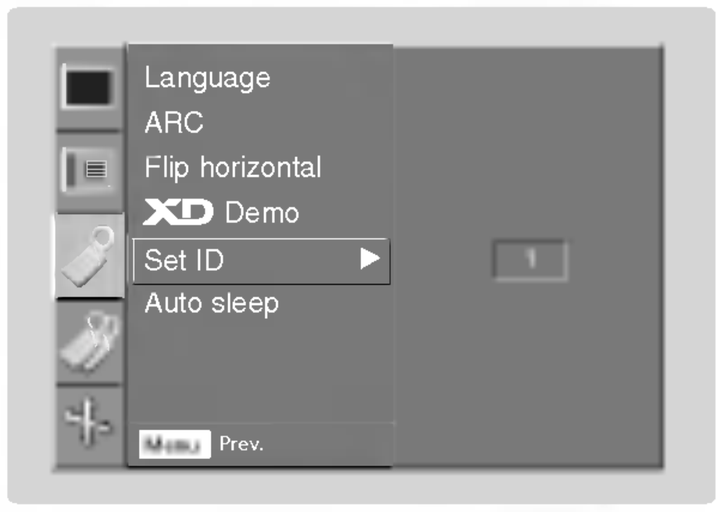

2. Press the ► button and then use ▲ , ▼ button to select **Set ID** item.

3. Press the ► button and then use ◄, ► button to adjust Set ID to select the desired projector ID number.

4. Press the ■**OK** button to save.

- The adjustment range of **Set ID** is 1~99.
- Only the projector with the specified ID number will operate from the remote control.
- To exit the menu display, repeatedly, press the **MENU** button.

How to connect external control equipment

• Connect the serial port of the PC to the RS-232C jack on the projector back panel.
• RS-232C cable is not supplied with the projector.

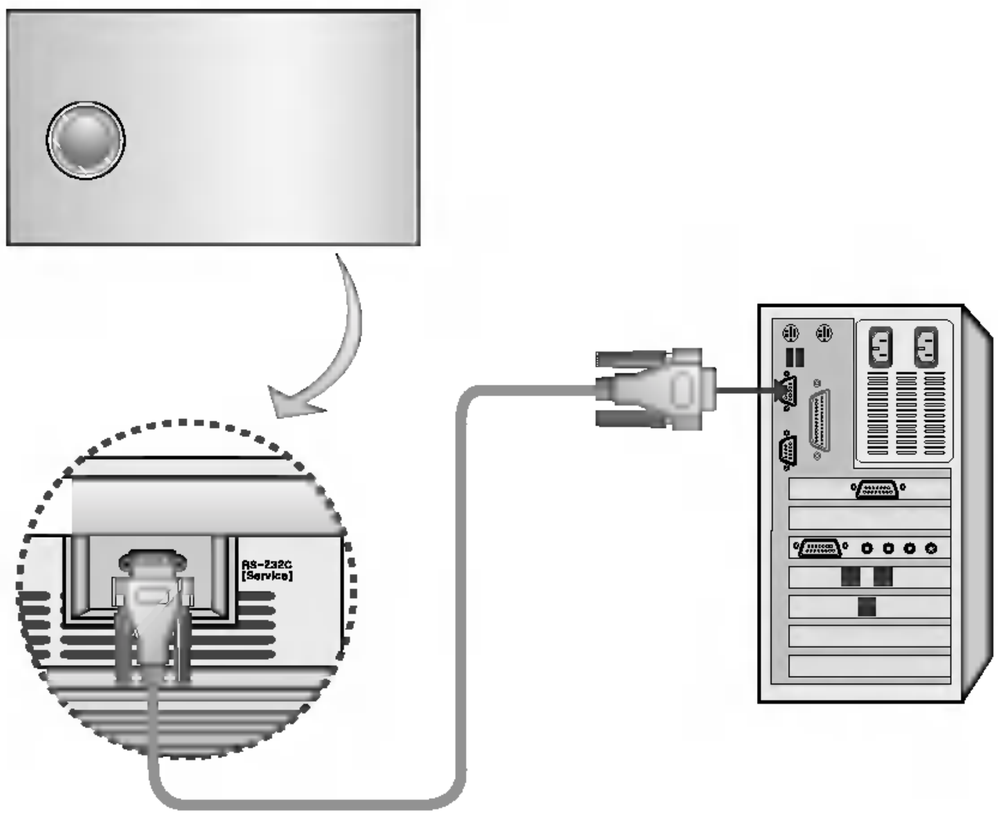

• Use the RS232C cable to control the projector externally (Refer to Fig.1).

<Fig.1, RS-232 Interface Cable>

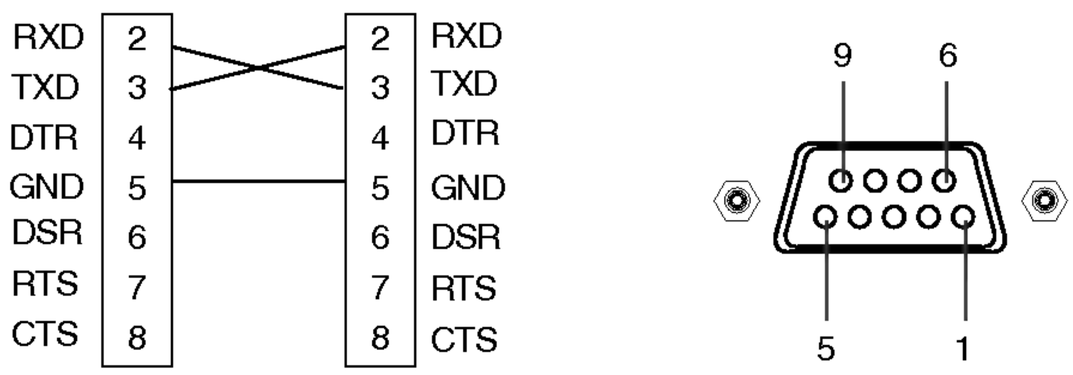

* 1, 9 Pin No Connection

Communication Parameter Setup

• Baud Rate : 115200 bps(UART)
• Data Length : 8 bit
• Parity : none
• Stop bit : 1 bit
• Flow Control : none
• Communication code : ASCII code

Command Reference List

	Command 1	Command 2	Data (Hexadecimal)
01. Power	k	a	0 ~ 1
02. Input Select	k	b	*
03. Aspect Ratio	k	c	*
04. Screen Mute	k	d	0 ~ 1
05. Contrast	k	g	0 ~ 64
06. Brightness	k	h	0 ~ 64
07. Color	k	i	0 ~ 64
08. Tint	k	j	0 ~ 64
09. Sharpness	k	k	0 ~ 64
10. OSD Select	k	l	0 ~ 1
11. Remote Control Lock / Key Lock	k	m	0 ~ 1
12. Color Temperature	k	u	0 ~ 2
13. Low Power	j	q	0 ~ 1
14. Auto configuration	j	u	1
15. Input Select	x	b	*

* This data will be explained in this document in detail.

❑ Communication Protocol

1. Transmission

[Command1][Command2][ ][Set ID][ ][Data][Cr]

* [Command 1] : First command to control the set.(k, j, x, ASCII code, 1 Character)
* [Command 2] : Second command to control the set..(ASCII code, 1 Character)
* [Set ID] : You can adjust the set ID to choose desired projector ID number in special menu. See previous page. Adjustment range is '01 ~ 99(0x01~0x63)'. When selecting Set ID '0', every connected projector set is controlled.
  In command Line, Set ID is used to 16 antilogarithm value.
* [DATA] : To transmit command data. Transmit 2 character when organized ASCII code.
  * Transmit 'FF' data to read status of command.
* [Cr] : Carriage Return
  ASCII code '0x0D'
* [ ] : ASCII code character correspond to "Space Bar" which is in order to classify command, set ID and Data.

2. OK Acknowledgement

[Command2] [ ] [Set ID] [ ] [OK] [Data] [x]

* The Projector transmits ACK (acknowledgement) based on this format when receiving normal data. At this time, if the data is data read mode, it indicates present status data. If the data is data write mode, it returns the data of the PC computer.

3. Error Acknowledgement

[Command2] [ ] [Set ID] [ ] [NG] [Data] [x]

* The Projector transmits ACK (acknowledgement) based on this format when receiving abnormal data from non-viable functions or communication errors.

Data : [1] : illegal code(This command is not supported.)
[2] : not support function(This function doesn't work.)
[3] : wait more time(Try again a few minute later.)

01. Power (Command2:a)

➜ To control Power On/Off of the Projector.

Transmission

[k] [a] [ ] [Set ID] [ ] [Data] [Cr]

Data 0 : Power Off
1 : Power On

Ack

[a] [ ] [Set ID] [ ] [OK] [Data] [x]

Data 0 : Power Off
1 : Power On

➜ To show Power On/Off status.

Transmission

[k] [a] [ ] [Set ID] [ ] [FF] [Cr]

Ack

[a] [ ] [Set ID] [ ] [OK] [Data] [x]

Data 0 : Power Off
1 : Power On

* In like manner, if other functions transmit '0xFF' data based on this format, Acknowledgement data feed back presents status about each function.

02. Input Select (Command2:b)

➜ To select input source for the Set.

Transmission

[k] [b] [ ] [Set ID] [ ] [Data] [Cr]

Data 2 : Video 3 : S-Video
4 : Component 6 : RGB-DTV
7 : RGB-PC 8 : HDMI(DVI)-DTV
9 : HDMI(DVI)-PC

Ack

[b] [ ] [Set ID] [ ] [OK] [Data] [x]

Data 2 : Video 3 : S-Video
4 : Component 6 : RGB-DTV
7 : RGB-PC 8 : HDMI(DVI)-DTV
9 : HDMI(DVI)-PC

03. Aspect Ratio (Command2:c)

➜ To adjust the screen format.

Transmission

[k] [c] [ ] [Set ID] [ ] [Data] [Cr]

Data 1 : Normal Screen(4:3)
2 : Wide(16:9)
4 : Zoom1
5 : Zoom2
8 : FULL

Ack

[c] [ ] [Set ID] [ ] [OK] [Data] [x]

Data 1 : Normal Screen(4:3)
2 : Wide(16:9)
4 : Zoom1
5 : Zoom2
8 : FULL

04. Screen Mute (Command2:d)

➜ To select screen mute on/off.

Transmission

[k] [d] [ ] [Set ID] [ ] [Data] [Cr]

Data 0 : Screen Mute Off (Picture On)
1 : Screen Mute On (Picture Off)

Ack

[d] [ ] [Set ID] [ ] [OK] [Data] [x]

Data 0 : Screen Mute Off (Picture On)
1 : Screen Mute On (Picture Off)

05. Contrast (Command2:g)

➜ To adjust screen contrast.

Transmission

[k] [g] [ ] [Set ID] [ ] [Data] [Cr]

Data Min : 0 ~ Max : 64
* Refer to 'Real data mapping 1'.

Ack

[g] [ ] [Set ID] [ ] [OK] [Data] [x]

Data Min : 0 ~ Max : 64

* **Real data mapping 1**

0 : Step 0
⋮
A : Step 10
⋮
F : Step 15
10 : Step 16
⋮
64 : Step 100

* **Real data mapping 2**

0 : Step -50
⋮
32 : Step 0
⋮
64 : Step 50

06. Brightness (Command2:h)

➜To adjust screen brightness.

Transmission

[k] [h] [ ] [Set ID] [ ] [Data] [Cr]

Data Min : 0 ~ Max : 64
* Refer to 'Real data mapping 1'.

Ack

[h] [ ] [Set ID] [ ] [OK] [Data] [x]

Data Min : 0 ~ Max : 64

07. Color (Command2:i)

➜To adjust the screen color.

Transmission

[k] [i] [ ] [Set ID] [ ] [Data] [Cr]

Data Min : 0 ~ Max : 64
* Refer to 'Real data mapping 1'.

Ack

[i] [ ] [Set ID] [ ] [OK] [Data] [x]

Data Min : 0 ~ Max : 64

08. Tint (Command2:j)

➜To adjust the screen tint.(Video/S-Video/Component)

Transmission

[k] [j] [ ] [Set ID] [ ] [Data] [Cr]

Data Red : 0 ~ Green : 64
* Refer to 'Real data mapping2'.

Ack

[j] [ ] [Set ID] [ ] [OK] [Data] [x]

Data Red : 0 ~ Green : 64

09. Sharpness (Command2:k)

➜To adjust the screen sharpness.(Video/S-Video/Component)

Transmission

[k] [k] [ ] [Set ID] [ ] [Data] [Cr]

Data Min : 0 ~ Max : 64
* Refer to 'Real data mapping 1'.

Ack

[k] [ ] [Set ID] [ ] [OK] [Data] [x]

Data Min : 0 ~ Max : 64

10. OSD Select (Command2:l)

➜To select OSD On/Off.

Transmission

[k] [l] [ ] [Set ID] [ ] [Data] [Cr]

Data 0 : OSD Off (OSD Lock Mode On)
1 : OSD On (OSD Lock Mode Off)

Ack

[l] [ ] [Set ID] [ ] [OK] [Data] [x]

Data 0 : OSD Off (OSD Lock Mode On)
1 : OSD On (OSD Lock Mode Off)

11. Remote Control Lock/Key Lock (Command2:m)

➜To lock the front panel controls on the projector and remote control.

Transmission

[k] [m] [ ] [Set ID] [ ] [Data] [Cr]

Data 0 : Lock Off
1 : Lock On

Ack

[m] [ ] [Set ID] [ ] [OK] [Data] [x]

Data 0 : Lock Off
1 : Lock On

* If you're not using the remote control, use this mode. When main power is On/Off, external control lock is released.

12. Color Temperature (ACC) (Command2:u)

➜ Adjust the color temperature.

Transmission

[k] [u] [ ] [Set ID] [ ] [Data] [Cr]

Data 0 : Normal 1 : Cool 2:Warm

Ack

[u] [ ] [Set ID] [ ] [OK] [Data] [x]

Data 0 : Normal 1 : Cool 2:Warm

13. Low Power (Command1:j, Command2:q)

➜ To reduce the power consumption of the projector.

Transmission

[j] [q] [ ] [Set ID] [ ] [Data] [Cr]

Data 0 : Low Power Off(Normal)
1 : Low Power On(Silent)

Ack

[q] [ ] [Set ID] [ ] [OK] [Data] [x]

Data 0 : Low Power Off(Normal)
1 : Low Power On(Silent)

14. Auto Configure (Command1:j, Command2:u)

➜ To adjust picture position and minimize image shaking automatically. It works only in RGB mode.

Transmission

[j] [u] [ ] [Set ID] [ ] [Data] [Cr]

Data 1 : To set

Ack

[u] [ ] [Set ID] [ ] [OK] [Data] [x]

Data 1 : To set

15. Input Select (Command1:x, Command2:b)

➜ To select input source for the Set.

Transmission

[x] [b] [ ] [Set ID] [ ] [Data] [Cr]

Data 20 : Video 30 : S-Video
40 : Component 50 : RGB-DTV
60 : RGB-PC 70 : HDMI(DVI)-DTV
80 : HDMI(DVI)-PC

Ack

[b] [ ] [Set ID] [ ] [OK] [Data] [x]

Data 20 : Video 30 : S-Video
40 : Component 50 : RGB-DTV
60 : RGB-PC 70 : HDMI(DVI)-DTV
80 : HDMI(DVI)-PC

Supported Monitor Display

* The following table lists the display formats supported by the projector.

Sources	Format	Vertical Freq.(Hz)	Horizontal Freq. (kHz)
VGAEGA	640X350	70.090Hz	31.468kHz
	640X350	85.080Hz	37.861kHz
PC98 / VGA text	640X400	70.090Hz	31.468kHz
	640X400	85.080Hz	37.861kHz
	720X400	70.082Hz	31.469kHz
	720X400	85.039Hz	37.927kHz
VGA	640X480	59.940Hz	31.469kHz
	640X480	72.800Hz	37.861kHz
	640X480	75.00Hz	37.500kHz
	640X480	85.008Hz	43.269kHz
SVGA	800X600	56.250Hz	35.156kHz
	800X600	60.317Hz	37.879kHz
	800X600	72.188Hz	48.077kHz
	800X600	75.00Hz	46.875kHz
	800X600	85.061Hz	53.674kHz
XGA	1024X768	60.004Hz	48.363kHz
	1024X768	70.069Hz	56.476kHz
	1024X768	75.029Hz	60.023kHz
	1024X768	84.997Hz	68.677kHz
SXGA	1152X864	60.053Hz	54.348kHz
	1152X864	70.01Hz	63.995kHz
	1152X864	75.00Hz	67.500kHz
	1280X768	60.00Hz	47.693kHz
	1280X960	60.00Hz	60.00kHz
	1280X1024	60.020Hz	63.981kHz

* If the projector does not support the input signal, “Out of range” message appears on the screen.
* The projector supports DDC1/2B type as Plug & Play function. (Auto recognition of PC monitor)
* The Synchronization input form for horizontal and vertical frequencies are Separate, Composite and SOG.
* According to PC, the optimum vertical frequency may not be displayed up to the optimum frequency of set in ‘Registration information (Display registration information)’. (ex, The optimum vertical frequency may be displayed up to 75Hz or under in the resolution of 640X480 or 800X600.)

<DVD/DTV Input>

Signal		Component-*1	RGB(DTV)-*2
NTSC(60Hz)	480i	O	X
	480p	O	O
	720p	O	O
	1080i	O	O
PAL(50Hz)	576i	O	X
	576p	O	O
	1080i	O	O

* Cable type
1- RCA to D-Sub Adaptor
2- Computer Cable

Maintenance

* The projector needs little maintenance. You should keep the lens clean because any dirt or stains may appear on the screen. If any parts need to be replaced, contact your dealer. When cleaning any part of the projector, always turn the power off and unplug the projector first.

Cleaning the lens

Clean the lens whenever you notice dirt or dust on the surface of it. Wipe the lens surface gently with an air spray or a soft, dry lint-free cloth.

To remove dirt or stains on the lens, moisten a soft cloth with water and a neutral detergent and wipe the lens surface gently.

Cleaning the Projector Case

To clean the projector case, first unplug the power cable. To remove dirt or dust, wipe the casing with a soft, dry, lint-free cloth. To remove stubborn dirt or stains, moisten a soft cloth with water and a neutral detergent and then wipe the casing.
Do not use alcohol, benzene, thinners or other chemical detergents as these can cause the casing to be warped or discolored.

Replacing the Lamp

Last of Lamp unit replacement

The projector lamp usually lasts for about 4000 hours. You can see the used lamp time in the Selecting Function section. You must replace the lamp when:

- The projected image gets darker or starts to be deteriorated.
- The lamp indicator is red.
- The message “Replace the lamp” appears on the screen when turning the projector lamp on.

<Front panel of the Projector>

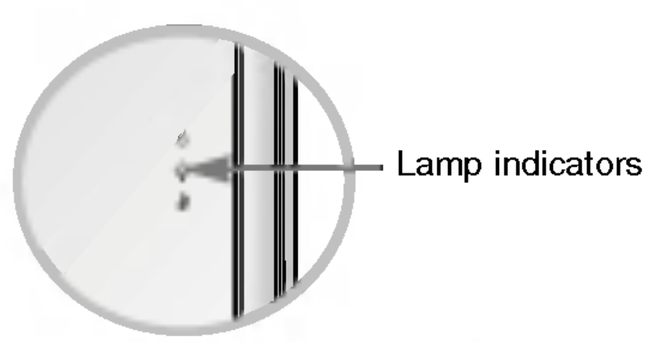

Be careful when replacing lamp

- Press the POWER button on the control panel or remote control to cut off the power.
- If the operation indicator LED is orange and blinking, do not disconnect the mains supply until the operation indicator LED is lit up constantly (orange).
- Allow the lamp to cool for 1 hour before replacing it.
- Replace only with the same type lamp from a LG Electronics Service Center using and other lamp may cause damage to the Projector and lamp.
- Pull out the lamp only when replacing the lamp.
- Keep the lamp unit out of reach of children or and heat sources such as radiators, stoves.
- To reduce the risk of fire, lamp shall not be exposed to liquids or foreign material.
- Do not place the lamp near any heat source.
- Make sure the new lamp is securely tightened with screws. If not, the image may be dark or there could be a risk of fire.
- Never touch the lamp unit glass or otherwise image quality may be worse or lamp life may be reduced.

To obtain a replacement Lamp unit

Lamp model number is on page 47. Check the lamp model and then purchase it at LG Electronics Service Center.
Using other lamp may cause damage to the projector.

Lamp unit disposal

Dispose of the used lamp by returning it to the LG electronic service center.

Replacing the Lamp

1 Turn off the projector and unplug the power cable. Carefully place the lens side down on a cushioned surface that will protect the lens from damage.

(Allow the lamp to cool for 1 hour before replacing it.)

2 Remove the two retaining screws on the lamp cover with a screwdriver or similar objects and then lift off the lamp cover.

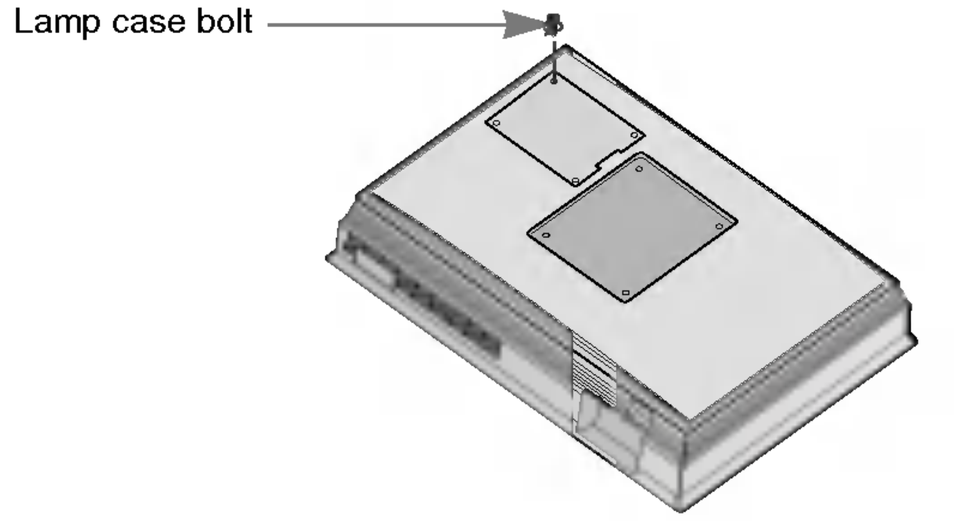

3 After lifting the lamp cover off, remove the two retaining screws on the lamp case with a screwdriver or similar objects.

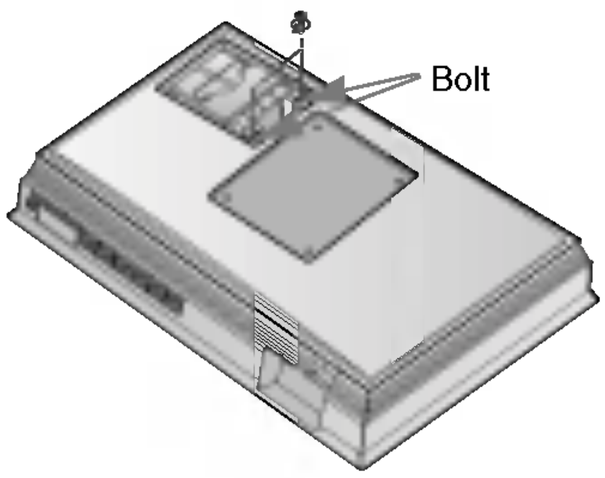

4 Lift up the fixed wire knob on the lamp.

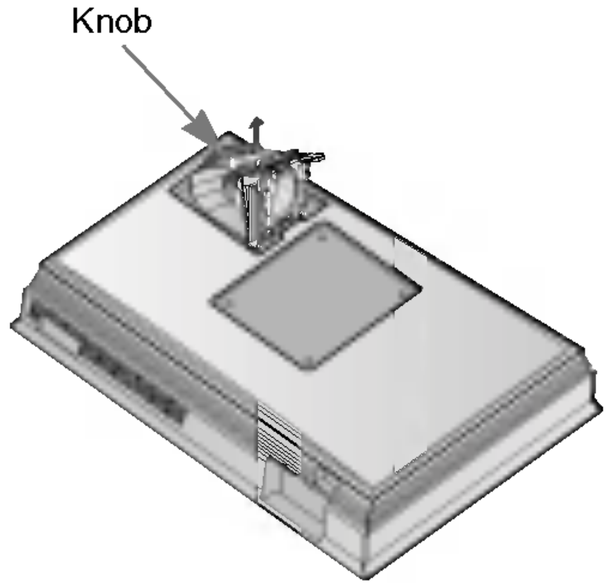

5 Pull out the handle slowly and remove the lamp case.

6 Insert the new lamp gently into the correct position. Make sure it is inserted correctly.

7 Tighten the screws you removed in step 3.

(Make sure it is fixed hardly.)

8 Replace the lamp cover and tighten the cover screws.

(If the lamp cover is open, the lamp indicator flashes green and the projector is not turned on.)

Note!

Using and other lamp may cause damage to the projector or lamp.
Make sure the lamp cover is securely fastened. If the lamp cover is open, and the projector is not turned on.
In this case, contact your service center after checking the lamp to fix well.

Memo

Memo

Specifications

MODEL	AN110B-JD/AN110W-JD
resolution	1280(Horizontal) x 768(Vertical)pixel
horizontal / vertical ratio	15:9(horizontal:vertical)
DLP panel size	0.65 inches
screen size	1.01~5.08m(40~200 inches)
remote control distance	12m
zoom ratio	1:1.4
Video compatibility	NTSC/PAL/SECAM/NTSC4.43/PAL-M/PAL-N
Power	AC 200 - 240V~50/60Hz, 1.3A-1A, 250W
height(mm/inches)	254.4/10.0
breadth(mm/inches)	443.4/17.4
length(mm/inches)	93.9/3.6

Operating Condition

temperature

In operation : 32~104°F(0°C~40°C)
In storage and transit : -4~140°F(-20°C~60°C)

humidity

In operation : 0~ 80% relative humidity by dry hygrometer
Not in operation : 0 ~ 90% relative humidity by dry hygrometer

Projector Lamp

lamp model

AJ-LAN1

lamp power consumption

200W

LAMP Replacement

⚠ **WARNING :** Lamp is no user replaceable part. Do not touch and open the lamp replace cover of bottom enclosure. It could cause injury and electric shock due to high temperature and voltage.
Only service personnel can replace lamp after minimum 3 min. from disconnect mains plug to avoid injury cause by high temperature of lamp.
* Applicable Lamp: Manufactured by USHIO Inc., type NSH200LG

P/NO : 3828VA0577Aⓐ