DISHWASHER
OWNER'S MANUAL

MODEL : LD-1416T

Please read this manual carefully before operating your dishwasher. Retain it for future reference.

CONTENTS

Dishwasher

SAFETY AND CAUTION	3
INSTALLATION INSTRUCTIONS	5
PARTS NAME	9
FUNCTION OF CONTROL BUTTON	10
HOW TO USE AND OPERATE	12
OPERATING SEQUENCE	18
PROGRAM	19
USER MAINTENANCE INSTRUCTIONS	20
TROUBLE SHOOTING GUIDE	21
SPECIFICATION	

SAFETY AND CAUTION

IMPORTANT SAFETY INSTRUCTIONS

⚠ WARNING - When using your dishwasher, follow basic precautions, including the following:

- Please read this manual carefully before using the dishwasher for the first time.
- This manual contains very important notes regarding the installation, use and maintenance of your dishwasher.
- The manufacturer can not be responsible for problems caused by ignoring these safety and caution instructions.
- This dishwasher is designed for normal household use.
- Do not use the dishwasher for industrial and commercial use, or other purpose.
- The appliance is not intended for use by young children or infirm persons without supervision.

During installation

- Electrical connection must be in accordance with the rating label.
- Electrical safety is only guaranteed when the earth system of your house is in accordance with the related local regulations.(Do not use an extension cable or cord.)
- If the hot water exceeds 65℃, adjust the water heater setting. If the hot water temperature can not be maintained below 65℃, the dishwasher must be connected to cold water.
- If power supply cord is damaged, it must only be replaced by the manufacturer or its service agent or a similar qualified person in order to avoid a hazard.
- This appliance must be positioned so that the plug is accessible.
- The appliance is to be connected to the water mains using new hose-sets and that old hose-sets should not be reused.

During use

- Only suitable household utensils should be placed in the dishwasher.
  (Please avoid utensils; that are non-heatresistant, metal decorated, etc.)
- Do not use any kinds of solvent in your dishwasher. They may cause an explosion or fire.
- Do not spray water on the appliance.
  It may cause the failure of electric parts or electric shock.
- Do not push down or sit on the inner door when the door opened. It may cause the deformation or failure of your dishwasher.
- Do not use the detergent for hand washing.
  The detergent for dishwasher should be used for normal operation.
- This appliance is fitted with a safety function that automatically stops the operation of the dishwasher when it is exposed to heavy disturbance on its mains.
- Dishwasher detergents are strongly alkaline. They can be extremely dangerous if swallowed. Avoid contact with skin and eyes and keep children away from the dishwasher when the door is open.
  Check that the detergent receptacle is empty after completion of the wash cycle.
- Some pre-treatment sprays or liquids can damage your dishwasher's control panel and plastic components, so do not use these products on or around your dishwasher.
- Be careful! Water could be splashed out when door is opened.



SAFETY AND CAUTION

Child Safety

- Controls may be locked using "Child Lock" mode to prevent from all the setting from being changed by a child.
- Keep children away from detergents and rinse-aids.
- Do not allow children to operate the dishwasher.
- Young children should be supervised to ensure that they do not play with the appliance.

CAUTION concerning the Power Cord

Most appliances recommend they be placed upon a dedicated circuit; that is, a single outlet circuit which powers only that appliance and has no additional outlets or branch circuits. Check the specification page of this owner's manual to be certain.

Do not overload wall outlets. Overloaded wall outlets, loose or damaged wall outlets, extension cords, frayed power cords, or damaged or cracked wire insulation are dangerous. Any of these conditions could result in electric shock or fire. Periodically examine the cord of your appliance, and if its appearance indicates damage or deterioration, unplug it, discontinue use of the appliance, and have the cord replaced with an exact replacement part by an authorized servicer.

Protect the power cord from physical or mechanical abuse, such as being twisted, kinked, pinched, closed in a door, or walked upon. Pay particular attention to plugs, wall outlets, and the point where the cord exits the appliance.

SAVE THESE INSTRUCTIONS

GROUNDING INSTRUCTIONS

This appliance must be grounded. In the event of a malfunction or breakdown, grounding will reduce the risk of electric shock by providing a path of least resistance for electric current. This appliance is equipped with a cord having an equipment-grounding conductor and a grounding plug. The plug must be plugged into an appropriate outlet that is installed and grounded in accordance with all local codes and ordinances.

WARNING - Improper connection of the equipment-grounding conductor can result in a risk of electric shock. Check with a qualified electrician or service representative if you are in doubt whether the appliance is properly grounded. Do not modify the plug provided with the appliance; if it will not fit the outlet have a proper outlet installed by a qualified electrician.

INSTALLATION INSTRUCTIONS

⚠ WARNING

Any electrical work required to install this appliance should be carried out by a qualified electrician or competent person. Any plumbing work required to install this appliance should be carried out by a qualified plumber or competent person.

Step 1 :
PREPARE CUPBOARD OPENING

1 This dishwasher is designed to fit to the size shown as below.

2 Select a location as close to sink as possible for easy connections to water and drain lines.

3 The dishwasher should not be installed more than 3 meters from sink for proper drainage.

4 If dishwasher is to be installed in a corner, a minimum 5cm of space is required between the washer and an adjacent cabinet or a wall.

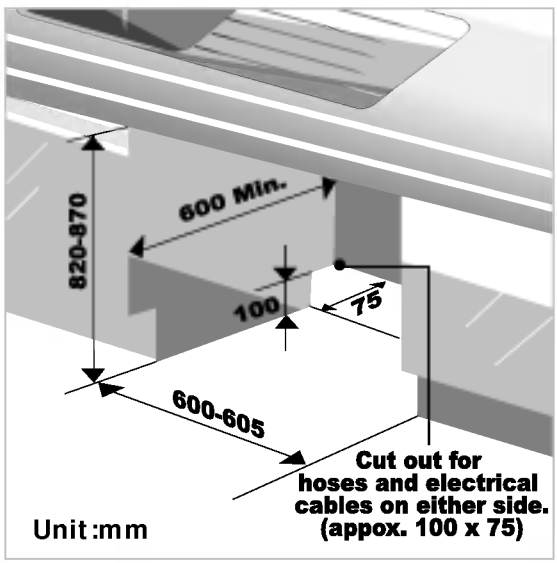

If bare chipboard is adjacent to or above the dishwasher, it should be sealed with a waterproofing paint or sealant to prevent swelling due to steam.

Step 2 :
PREPARE ELECTRICAL WIRING

⚠ CAUTION

For personal safety, remove house fuse or open circuit breaker before installation. Do not use an extension cord or adapter plug with this appliance. Electrical and grounding connections must comply with the national electrical code/provincial and municipal code and/or other local codes.

1 This appliance must be supplied with correct rating voltage and hertz as shown on instruction manual, and connected to an individual, properly grounded branch circuit, protected by minimum 15 amp circuit breaker or time delay fuse. Wiring must be 2 wires with ground.

2 The power plug must be in a accessible location adjacent to and not behind the dishwasher and within 1.2 meters of the dishwasher side.(See page 7 Fig.A)

3 The power plug must be correctly earthed, if in doubt, have it checked by a qualified Electrician. No other appliance should be connected to the same plug outlet by a double adapter or similar plug.

Step 3 :
PREPARE DISHWASHER FOR INSTALLATION

1 Lay the dishwasher on its back.

2 Adjust the legs to the needed height of cabinet as shown in below figure.

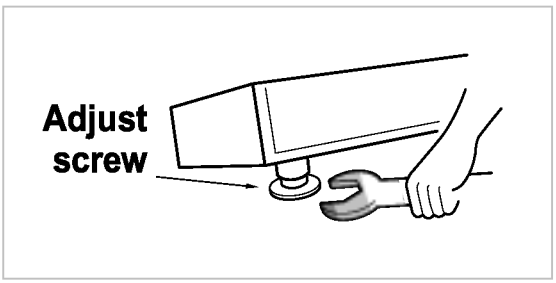

Step 4 :
INSTALL THE DISHWASHER IN CUPBOARD

1 Before sliding the dishwasher into the cupboard opening, all necessary final height adjustment and balancing adjustment should be done using the spanner.

2 Slide the dishwasher into the cabinet opening carefully. Make sure that the drain hose inside the cabinet is not kinked or stretched.

⚠ CAUTION

If the height of cupboard is below 850mm, you should remove the top table by unscrewing the 2 screws. (Two of rear)

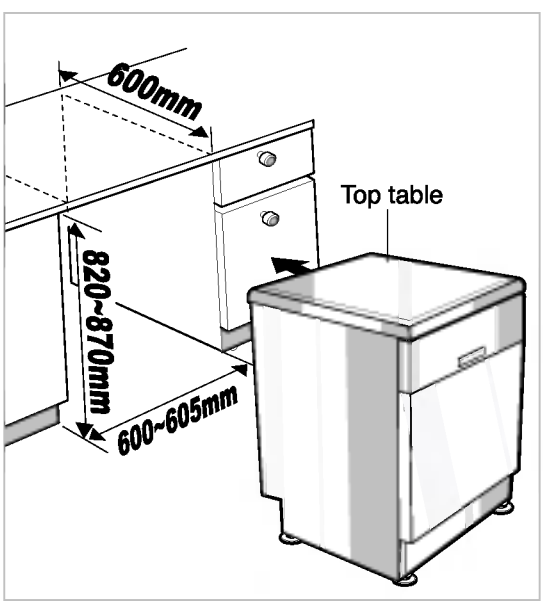

Step 5 :
DRAIN LINE CONNECTION

1 If the end of drain hose does not fit to the drain line, use a piece of rubber connector(not supplied) that must be resistant to heat and detergent and may be obtained from a plumbing shop.

2 There are 2 typical connections as shown in Figure A, B.

The "S" trap spigot must be drilled out cleanly and free of obstruction to its maximum internal diameter, if used for drainage.

To prevent siphoning, one of the following instruction methods must be followed:

■ When the drain hose is connected to a sink "s" trap or waste disposal unit, the hose must be looped up to the underside of the bench top and secured.

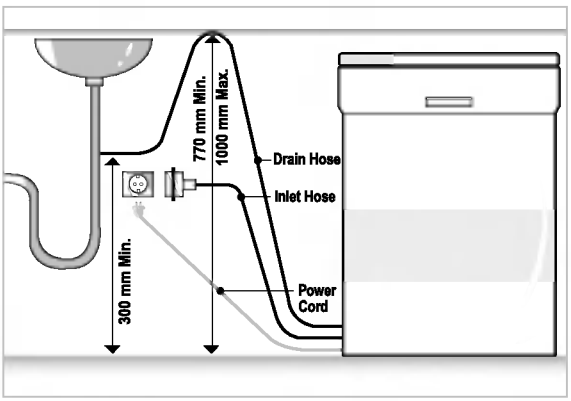

Fig. A

■ When the drain hose is connected to a separate stand pipe, it is essential that an air tight connection is made.
Refer to Fig.B

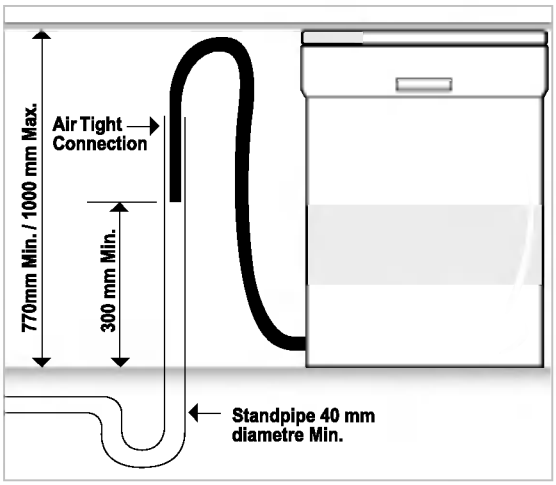

Fig. B : Drainage connection - stand pipe.

Drain Hose Extension

Extend Drain Hose as shown below.

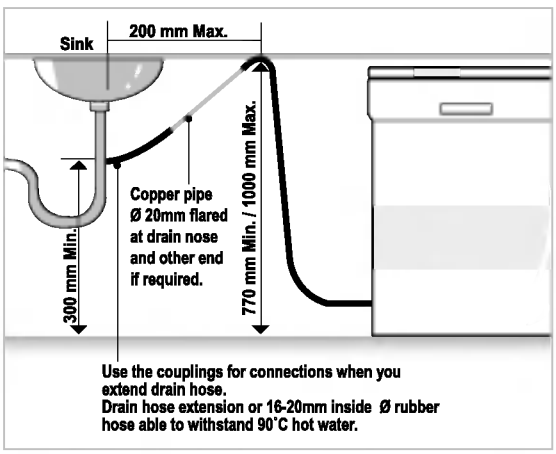

⚠ CAUTION

When you connect or extend Drain Hose, make sure that drain hose is not kinked. (Bends should have 40 mm radius.)

Step 6 :
WATER SUPPLY CONNECTION

1 Connect the water supply hose to the water tap as shown.(Some models consist of an inlet valve and hose.)
This dishwasher may be fed with either hot or cold water. If the water can not be maintained below 65°C, the dishwasher must be connected to cold water.

2 When connecting, the sealant tape or sealing compound to avoid water leaks.

Make sure that the line is not kinked or sharply bent.

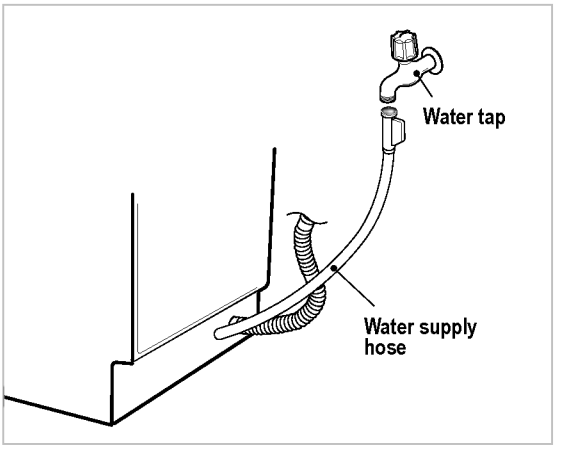

Step 7 :
FINAL CHECK AND ASSEMBLING

1 Securely hand tighten supply hose to water supply.
Plug power supply cord into an earthed the power plug and switch on.

2 After installing the product, operate the dishwasher through one cycle (Quick cycle is recommended) without loading the dishes.
Through this, you can check for water leak and operating conditions.
When you operate the product the first, the noise may be occurred.
In that case, turn off power switch and restart the dishwasher.

Step 8 :
HOW TO LEVEL THE PRODUCT

After installing the product, if you feel some sticky or hear a frictional sound between the side portion of door and tub when you open or close the door, you have to adjust the level of product.

Case 1. In case the door is slanted to the right

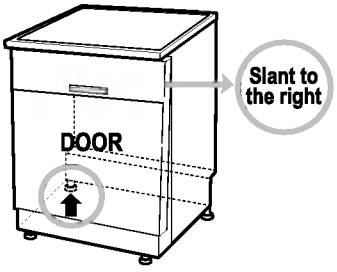

Fig. C

- If the door is slanted to the right as shown in figure C, repeat the procedure shown as below until the door is operated normally.
  1) Unscrew(counter-clockwise) the left leg of back side and high the level.
  2) Check the opening of door if there still remains sticky or friction sound.
- When the product is correctly leveled, There should be no slant , stickiness or friction sound.

Case 2. In case the door is slanted to the left

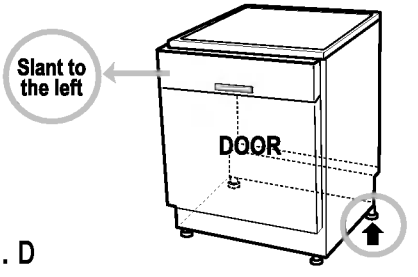

Fig. D

- If the door is slanted to the left as shown in figure D, repeat the procedure shown as below until the door is operated normally.
  1) Unscrew(counter-clockwise) the right leg of back side and high the level.
  2) Check the opening of door if there still remains sticky or friction sound.
- When the product is correctly leveled, There should be no slant , stickiness or friction sound.

PARTS NAME

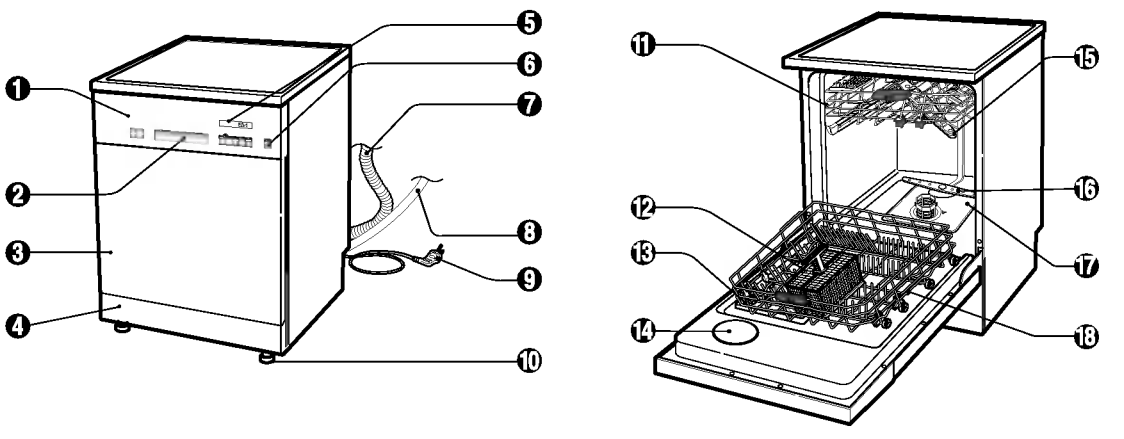

1. Control Panel
2. Door Handle
3. Front Cover
4. Lower Cover
5. Process Monitor
6. Power Switch
7. Drain Hose
8. Inlet Hose
9. Power Cord
10. Adjust Leg
11. Upper Rack
12. Cutlery Basket
13. Detergent & Rinse Aid Dispenser
14. Vapor Vent Cover
15. Upper Spray Arm
16. Lower Spray Arm
17. Filter ASM
18. Lower Rack

FUNCTION OF CONTROL BUTTON

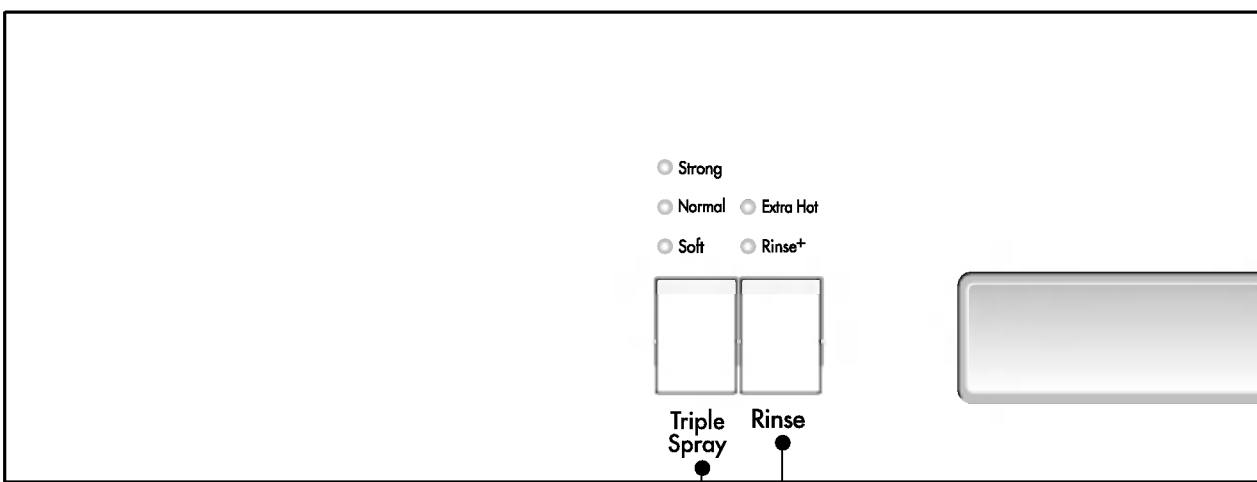

TRIPLE SPRAY

- With each press, the level of water jet is changed to Strong, Normal and Soft in a sequence.

RINSE

- Repeated pressing of the Rinse button will select Extra Hot, Rinse+.
- If you select the **Extra Hot** function, the operationg temperature will be up to 80℃. (Intensive, Eco 70°, Eco 50°)
- When you select **Rinse+**, an additional rinse cycle is added.

INDICATOR

- Refill with rinse aid
- Child Lock

TIME LEFT

- Before starting, the display window shows the running time of the selected program.
- After starting, the display window shows the remaining time.
- If the dishwasher has a trouble, the trouble type is displayed.

"dE" : **Drainage trouble**
"FE" : **Problem of overfilling water**
"iE" : **Water inlet trouble**
"Ei" : **Water leakage trouble**
"HE" : **Heater trouble**

If this error letters are displayed, please refer to the trouble shooting guide page 21 and follow the guide.

※ "Cd" : No error message (See page 18)

DELAY START

- If you want to delay the start of selected program, press this button before pressing program button.
- Pressing the **Delay Start** will increase time by 1 hour.
- The delay start time can be adjusted from 1 hour to 19 hours.

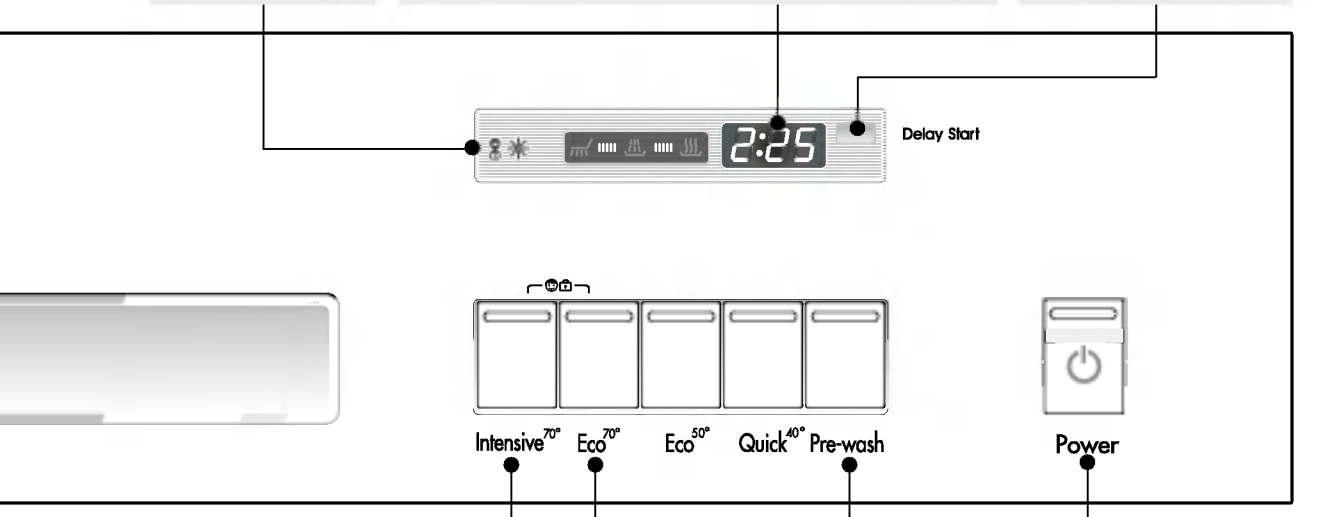

PROGRAM

- When you want to select program, press each button.

CHILD LOCK

- Used to lock or unlock the control buttons to prevent all the setting from being changed by a child.
- This function is automatically canceled when power failure occur.
- For locking/ unlocking, press **Intensive** and **Eco 70°** button for a few seconds simultaneously.

BEEP ON/OFF

- The dishwasher must be switched on.
- The beep on/off function can be set by pressing the **Intensive** and **Pre-wash** button simultaneously for a few seconds. Then, a "on" will appear in the time display.
- The beep on/off function is automatically canceled when power failure occur.

POWER

- For operating, press this button first for power on.
- After operating, this button automatically switches off for safety and energy saving.
- In case of irregular surge disturbance to the machine, the power may be automatically turned off for safety.

1. Loading your Dishwasher

For the best washing performance, it is important that the dishwasher is loaded according to instructions. Before loading items into the dishwasher, you must scrape off large particles in particular non soluble items such as bones, toothpicks, pips, etc.

When loading the dishwasher, observe the following general guidelines:

- Position crockery such that water will contact all surfaces.
- Deep based items should be placed at an angle to help water run off and dry properly.
- Items with burnt on scraps should be soaked prior to loading in the dishwasher.

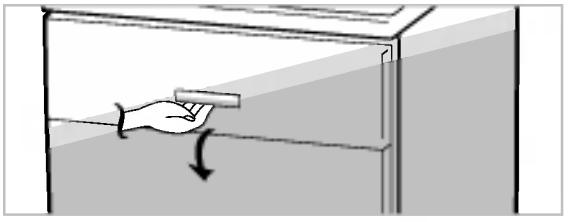

2. Loading the Lower Rack

The lower basket is best loaded with dinner plates, soup bowls, dishes, pots, pans, lids and even the grill tray.
Plates should be positioned upright and facing the center of the rack.
Pots, pans and large dishes must be turned upside down.

Take care not to obstruct the rotation of the spray arms.

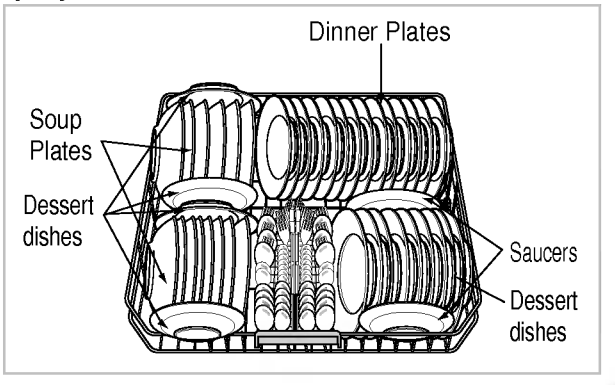

Be careful large items not to prevent the detergent dispenser lid from opening

3. Using the Cutlery Basket

Cutlery should be mixed within each section of the cutlery basket to prevent nesting of similar items. Place the cutlery in the cover with the handles down. The cover can be hinged and clipped away from the basket if you choose not to use them.
For the knives, place at seperate rack for knives located at upper rack.

Take care when loading and unloading sharp items.

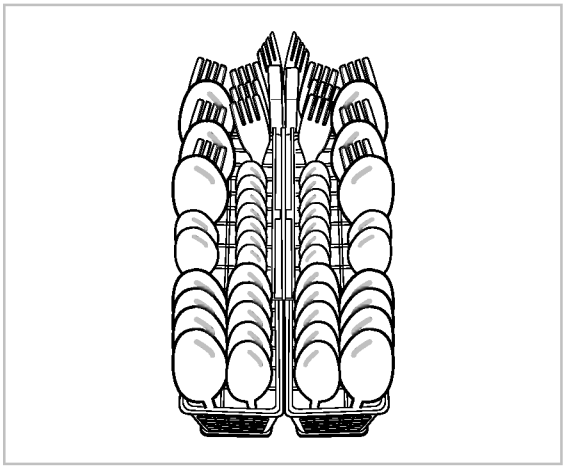

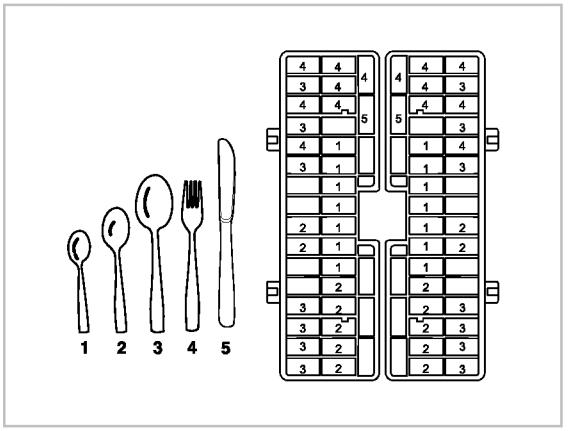

4. Loading the Upper Rack

The upper rack is best loaded with more delicate items, small plates, long cutlery, cups, glasses and dishwasher safe plastic items. Plates should be positioned upwards with the plate bottom facing the front of the rack.
Cups, glasses and bowls must be positioned upside down.
Extra cups or cooking utensils can be laid on the fold down cup racks which may also provide support for long stem glasses.
Take care not to obstruct the rotation of the spray arm under the upper rack.

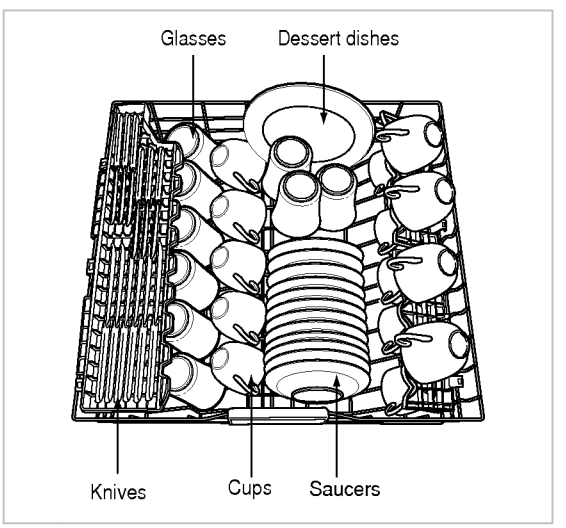

Non Dishwasher Safe Items

The combination of high water temperatures and dishwasher detergent may damage particular items, therefore we do not recommend using the dishwasher to wash the following:

- Copper or anodized aluminum
- Hand painted silver or gold leaf crockery
- Wood or bone handled utensils
- Iron or non rust proof utensils
- Plastic items which are not dishwasher safe.

5. Adjusting the Upper Rack

Your upper rack can be raised or lowered to cater for different sized crockery. Before adjusting, ensure that the rack is empty.
You can change the position of the upper rack by lifting the rack upward, into the upper position, or by pulling on the two levers on either side of the rack to move it down to its lower position.
We recommend that where possible the upper rack remains level.
And when you pull the rack upward, hold the middle location of the upper rack (☛ marked position)

After adjusting the rack levels, check that the spray arm is free to rotate.

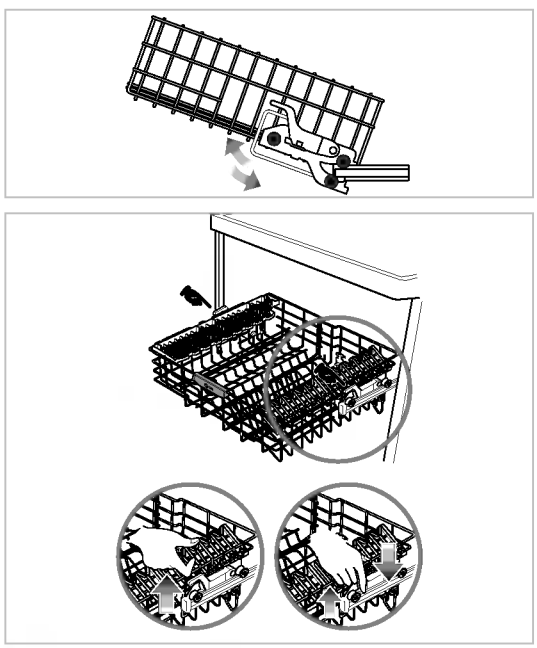

⚠ WARNING

Before adjusting, ensure rack is empty of all crockery.
Otherwise crockery may be damaged or you may be injured.

6. Adding Detergent Dispenser

- Detergent must be put into the detergent chamber before starting every program except the Pre-wash.
- Please follow the manufacturer's instructions printed on the manual when determining the correct dosage.
- If your dishes are only moderately dirty, you may be able to use less detergent than recommended.
- Chambers hold 15g and 25g.
- The amount of detergent depends on the program. Refer to the guide table.

PROGRAM	AMOUNT OF DETERGENT
Intensive	25g
Eco 70°	20g
Eco 50°	15g
Quick	10g
Pre-wash	No detergent

- After the detergent is supplied, the chamber lid should be closed.
- The detergent is dispensed automatically during the operation.
- The chamber lid remains open after operation.

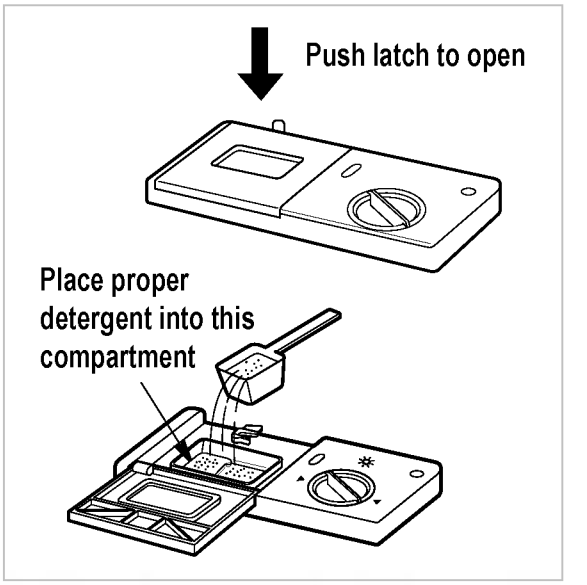

⚠ WARNING

The detergent used is a special Dishwasher detergent and like all household chemicals should be treated as a poison and kept out of reach of children. At completion of each wash program, the detergent compartment should be checked and any remaining detergent removed.

Detergent Information

Use only the detergent intended for household dishwashers. (Ordinary hand-washing detergent should not be used, because the foam can interfere with proper operation.)

7. Adding Rinse Aid Dispenser

■ For filling

To fill the Rinse Aid chamber, rotate the round cap counter clockwise and remove. Fill the container to the maximum level with a good quality Rinse Aid, then replace and lock the cap.
The Rinse Aid is automatically dispensed during the final rinse cycle.

The dosage setting is factory set to suit most installations. If, after washing, you notice cloudy spots, streaks or water marks on your glassware, it may be necessary increase the setting. To do so, remove the cap and rotate the indicator arrow to a higher setting then replace the cap . If the glasses are smeared or there is foam present on the bottom of the glass or the bottom of the machine. Select a lower setting.

■ For refilling

Depending on the dosage setting and the number of washes, the chamber may need only to be topped up once per month approximately. The rinse aid level can be checked by two methods.

- By the indicator window on the dispenser when the dishwasher door is fully open.
  - ● **Black indicates sufficient Rinse Aid**
  - o **Clear indicates Rinse Aid required**
- By the light on the control panel when the dishwasher is working on.

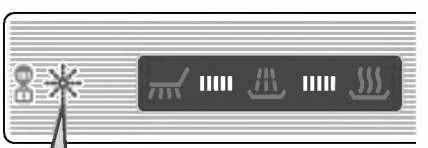

When the lamp is lit, it means the rinse aid is almost empty. Refill the Rinse Aid chamber as soon as possible.

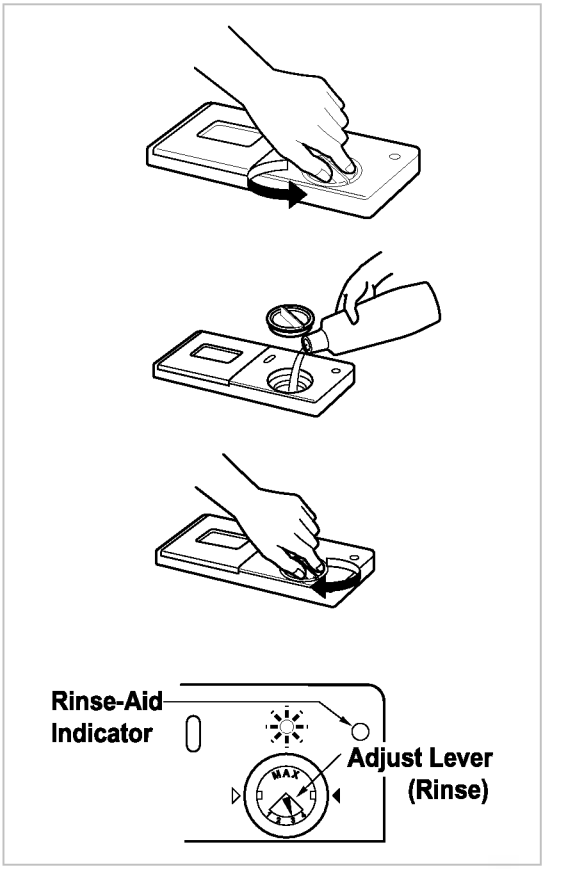

Rinse Aid Information

Rinse Aid is necessary in order to get spot and streak free dishes as well as improved drying. Using the correct amount will improve wash performance. However, using too much can produce excess foam leading to possible water leaks.

8. Fold down dividers

■ Fold-down dividers at the lower and the upper rack can be lowered to improve stacking of pots and pans.

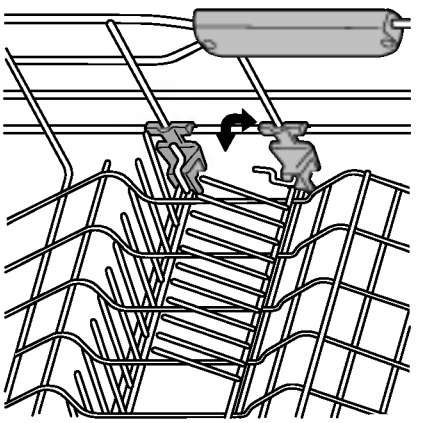

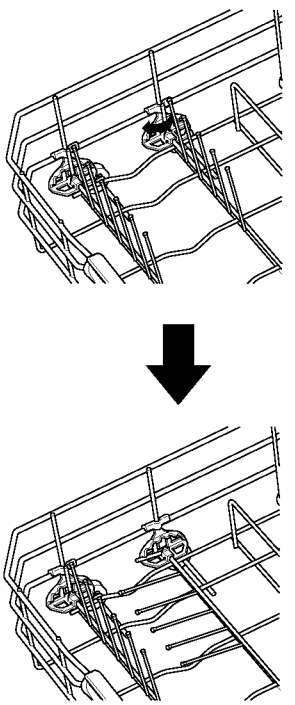

9. Removable Rack

■ A removable rack at the lower rack is detachable for loading pots and pans.

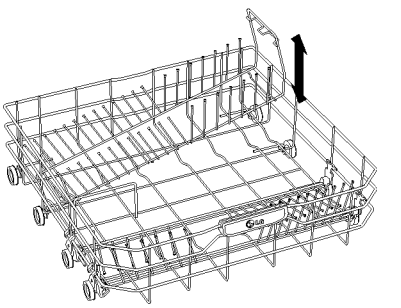

10. Glass supporter

■ A glass supporter can be folded down to arrange glasses and cups easily on the upper rack.

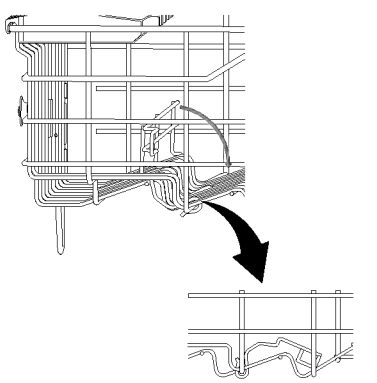

11. Separable basket

■ Slide two baskets in opposite directions, then pull them apart.

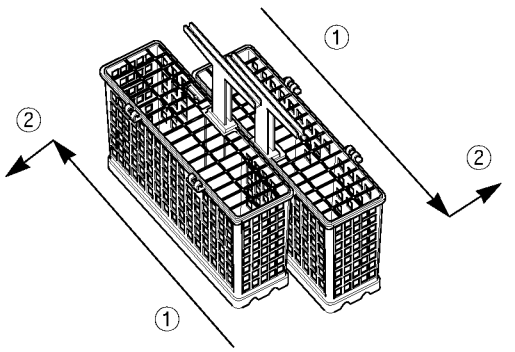

12. Drying

■ To assist drying, we recommend that the door be fully opened after the cycle.

13. Energy Test (AS / NZS 2007)

■ Appliance loaded in accordance with standard specifications.

- Example of loaded dishwasher : p.12~13
- Capacity : 14 place settings
- Comparability course : Eco, 50℃ Triple Spray-Strong
- Rinse Aid setting : 3
- Reference cleaner : 6g of detergent onto the inside surface of the door and fill 24g into the detergent dispenser.
- Height-adjustable Rack-U must be inserted into the uppermost position.

OPERATING SEQUENCE

Press the "Power" button

Check there is rinse aid

The corresponding indicator lights will illuminate if refilling is required.

Open the door and check the filters

Ensure they are clean and properly positioned (See "User Maintenance Instructions").

Load the dishes

Remove any excess food.
Pull the lower rack out and arrange the dishes and cutlery.
Pull the upper rack out and arrange the cups, glasses, etc.

⚠ CAUTION

Do not load the items in upper rack with the lower rack is pulled out and loaded.

Ensure the spray arms can freely rotate

Measure out detergent

Add the required amount of detergent into the dispenser and close the lid.

Setting and starting the program

Press the program button to select the desired program.
After 3 seconds, the machine will start.
If necessary, select the option function corresponding to the desired program.
The indicator lights of the program and all the phases of the program will come on.

Before starting, the display window shows the running time of the selected program.
After starting, the display window shows the remaining time.
The time in the display window will start to decrease minute by minute.
If the door is opened during the program a safety device ensures that the machine stops.
Once the door is re-closed the program will start from where it was interrupted.

At the end of the washing program

"End" is displayed on the digital display and a buzzer sounds. The display then shows "Cd" to indicate that the dishwasher is in "Cool dry" mode.

Cool dry-"Cd"

This process is not part of the program.
At the end of the program, the fan will continue to operate for about an hour to diminish any remaining moisture.
If you want, you can now open and unload the dishwasher.
Otherwise the dishwasher automatically switches off for safety and energy saving later.

⚠ CAUTION

Empty the lower rack first and then the upper one. This will avoid water dripping from the upper rack onto the dishes below.

⚠WARNING

In general it is not advisable to open the door while the machine is working.
If the door is opened, a safety device ensures that the machine stops.
Care must be taken if the door is opened during the hot phase or immediately after a program has finished, as steam may escape.

PROGRAM

▶ According to the water temperature, pressure, voltage, running time may be varied.
▶ Running time doesn't contain "Cool dry - 60 min".

Program	WASH		RINSE				DRY	Cool dry
	Pre Wash	Main Wash	Rinse 1	Rinse 2	Rinse 3	Heating Rinse		
Intensive	50℃	70℃				70℃		
Eco 70°		60℃				70℃		
Eco 50°		40℃				50℃		
Quick		35℃				40℃		
Pre-wash								

Intensive Wash

This program is ideal for very dirty crockery, in particular pots, pans and casserole dishes.

Eco 70° Wash

This program is for heavily soiled.

Eco 50° Wash

This program offers the most efficient energy and water consumption for a good washing performance. It is recommended that it will be used every time.

Quick Wash

Can use for lightly soiled recently used dishes and cutlery.

Pre-wash

Can use this program for only removing soil before washing dishes by hand.

※ *"Cool dry" is not part of the program.(See page 18)*

※ ***Auto Restart***
If the dishwasher is turned off by a power failure, it will restart automatically from the position it stopped at adjusting accordingly.

USER MAINTENANCE INSTRUCTIONS

To prevent trouble and poor operating, it is important to check and care for the filters and spray arms at intervals.

Filters

- Remove the lower rack first.
- Turn the mesh filter counterclockwise off.
- Take out the mesh filter, upper STS filter and outer filter.
- Clean them if necessary.
- Replace them in the reverse order.

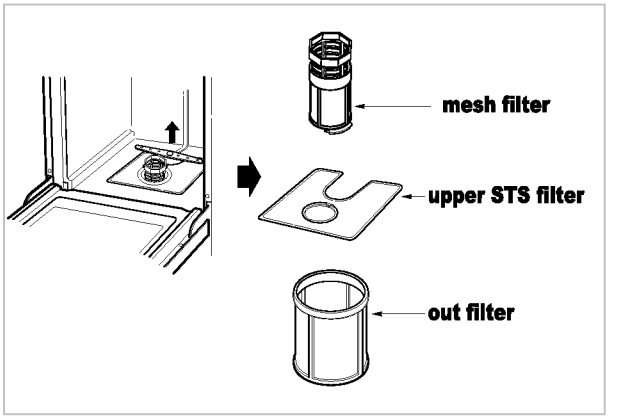

Upper Spray Arm

- Pull the upper rack forwards.
- Check that the water jet holes are not blocked by food particles.
- When necessary to clean, remove the arm by unscrewing the nut.
- Clean the spray arm and replace it in the reverse order.

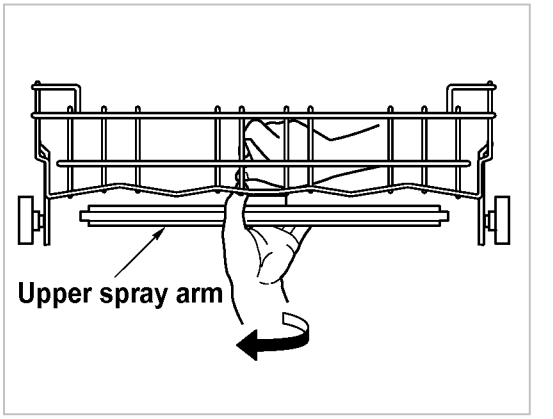

Lower Spray Arm

- Check that the water jet holes are not blocked by food particles.
- When necessary to clean, remove the arm by pulling up.
- Clean the spray arm and replace it pulling down.

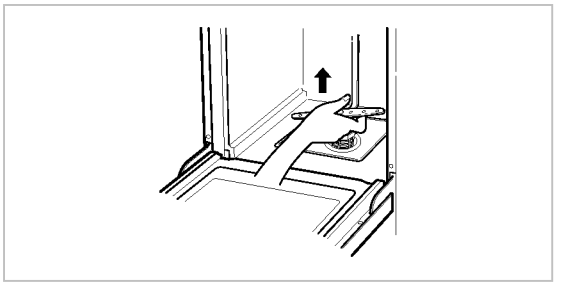

TROUBLE SHOOTING GUIDE

- If a problem occurs check below to see whether this can be solved.
- In the unlikely event that the problem cannot be rectified, please contact aservice engineer.

Problem	Possible Causes
The lamps do not come on when the power switch on.	• Plug is not properly inserted in the socket. • Fuse blown or circuit breaker tripped. • The electricity of the house was cut off.
The machine does not start.	• Door is not fully closed. • The start button is not pressed.
Water is not pumped away. (The display show "OE" code.)	• The drain hose is kinked. • The filter is clogged. (Clean the filter.)
The display shows "FE" code. (Automatically Drain Pump operated.)	• Excessive water is supplied than normal water level. • The inlet valve is troubled.
The display shows "1E" code.	• Water is not supplied. (Water tap is not opened.)
The display shows "E1" code.	• Water leakage in Hose connections. • Water is leaked by damages.
The display shows "HE" code.	• The circuit of Heater is troubled.
The spray arms does not rotate smoothly.	• The mounting of spray arms is blocked by food particles. (Clean the holes of the spray arm.)
White deposits are left on the dish washer after washing.	• The amount of detergent or rinse-aid set incorrectly.
Streaks are left on glassware.	• Too little Rinse-aid dispensed.
Dry results are not satisfactory.	• Too little Rinse-aid dispensed.
Washing results are not satisfactory.	• Incorrect amount of detergent. • Utensils incorrectly arranged or overloaded. • Filters are clogged. • Water jet holes of spray arms blocked. • Spray arms' rotation obstructed by utensils. • Unsuitable program selected.
The display shows "Cd "code.	• No error message.(See page 18.)

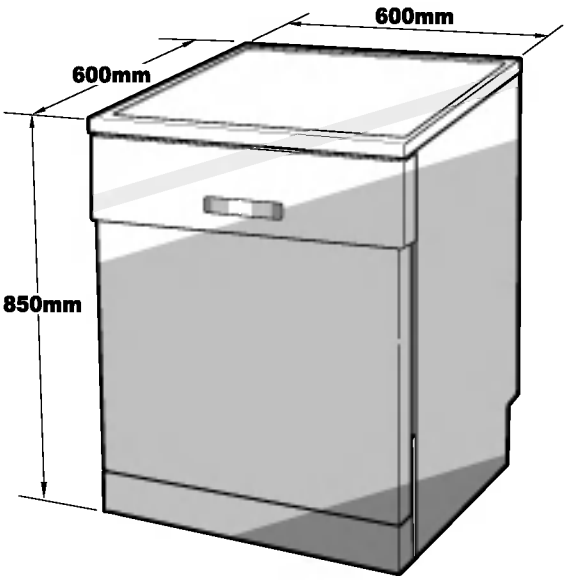

Capacity	14 Place settings
Weight	52 kg
Power Supply	See rating label
Power Consumption	See rating label
Water Feed Pressure	50 ~ 800 kPa