LG

MICROWAVE OVEN

OWNER'S MANUAL

PLEASE READ THIS OWNER'S MANUAL THOROUGHLY BEFORE OPERATING.

MB4344B
MB4344BS

P/ No. : 3828W5A8006

Precautions

Precautions to avoid possible exposure to excessive microwave energy.

You cannot operate your oven with the door open due to the safety interlocks built into the door mechanism. These safety interlocks automatically switch off any cooking activity when the door is opened; which in the case of a microwave oven could result in harmful exposure to microwave energy.
It is important not to tamper with the safety interlocks.

Do not place any object between the oven front face and the door or allow food or cleaner residue to accumulate on sealing surfaces.

Do not operate your oven if it is damaged. It is particularly important that the oven door closes properly and that there is no damage to the: (1) door(bent), (2) hinges and latches (broken or loosened), (3) door seals and sealing surfaces.

Your oven should not be adjusted or repaired by anyone except qualified service personnel.

Warning

When heating liquids, e.g. soups, sauces and beverages in your microwave oven, delayed eruptive boiling can occur without evidence of bubbling. This could result in a sudden boil over of the hot liquid. To prevent this possibility the following steps should be taken:

1. Avoid using straight sided containers with narrow necks.
2. Do not overheat.
3. Stir the liquid before placing the container in the oven and again halfway through the heating time.
4. After heating, allow to stand in the oven for a short time, stir or shake them(especially the contents of feeding bottles and baby food jars) again carefully and check the temperature of them before consumption to avoid burns (especially, contents of feeding bottles and baby food jars).
   Be careful when handling the container.

Warning

Always allow food to stand after being cooked by microwaves and check the temperature of them before consumption. Especially contents of feeding bottles and baby food jars.

Contents

How the Microwave Oven Works

Microwaves are a form of energy similar to radio and television waves and ordinary daylight. Normally, microwaves spread outwards as they travel through the atmosphere and disappear without effect. Microwave ovens, however, have a magnetron which is designed to make use of the energy in microwaves. Electricity, supplied to the magnetron tube, is used to created microwave energy.

These microwaves enter the cooking area through openings inside the oven. A turntable or tray is located at the bottom of the oven. Microwaves cannot pass through metal walls of the oven, but they can penetrate such materials as glass, porcelain and paper, the materials out of which microwave-safe cooking dishes are constructed.

Microwaves do not heat cookware, though cooking vessels will eventually get hot from the heat generated by the food.

A very safe appliance

Your microwave oven is one of the safest of all home appliances. When the door is opened, the oven automatically stops producing microwaves. Microwave energy is converted completely to heat when it enters food, leaving no "left over" energy to harm you when you eat your food.

Precautions ____ 2
Contents ____ 3
Unpacking & Installing ____ 4 ~ 5
Setting the Clock ____ 6
Child Lock ____ 7
Micro Power Cooking ____ 8
Micro Power Level ____ 9
Two Stage Cooking ____ 10
Quick Start ____ 11
Grill Cooking ____ 12
Combi. Cooking ____ 13
Quick Defrost ____ 14 ~ 15
European menu ____ 16 ~ 18
Auto Cook ____ 19 ~ 21
Auto Defrost ____ 22 ~ 23
Auto Roast ____ 24 ~ 26
More or Less Cooking ____ 27
Safety precautions ____ 28
Microwave - safe Utensils ____ 29
Food characteristics & Microwave cooking ____ 30 ~ 31
Questions & Answers ____ 32
Technical Specification ____ 33
MAFF Reheating Cooked Chilled Foods ____ 34
GUARANTEE ____ 35

Unpacking & Installing

By following the basic steps on these two pages you will be able to quickly check that your oven is operating correctly. Please pay particular attention to the guidance on where to install your oven. When unpacking your oven make sure you remove all accessories and packing. Check to make sure that your oven has not been damaged during delivery.

1 Unpack your oven and place it on a flat level surface.

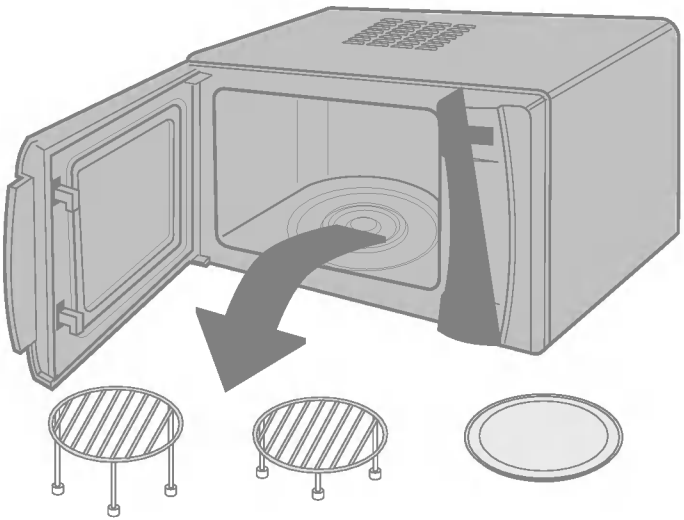

HIGH RACK

LOW RACK

GLASS TRAY

ROLLER REST

2 Place the oven in the level location of your choice with more than 85cm height but make sure there is at least 30cm of space on the top and 10cm at the rear for proper ventilation. The front of the oven should be at least 8cm from the edge of the surface to prevent tipping.
An exhaust outlet is located on top or side of the oven. Blocking the outlet can damage the oven.

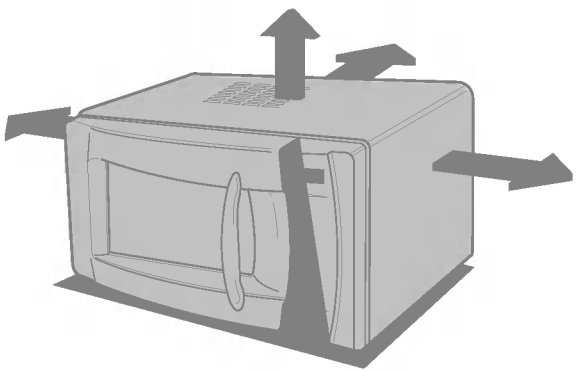

THIS OVEN SHOULD NOT BE USED FOR COMMERCIAL CATERING PURPOSES

3 Plug your oven into a standard household socket. Make sure your oven is the only appliance connected to the socket. **If your oven does not operate properly, unplug it from the electrical socket and then plug it back in.**

4 Open your oven door by pulling the **DOOR HANDLE**. Place the **ROTATING RING** inside the oven and place the **GLASS TRAY** on top.

5 Fill a **microwave safe container** with 300 ml (1/ 2 pint) of water. Place on the **GLASS TRAY** and close the oven door. If you have any doubts about what type of container to use please refer to page 29.

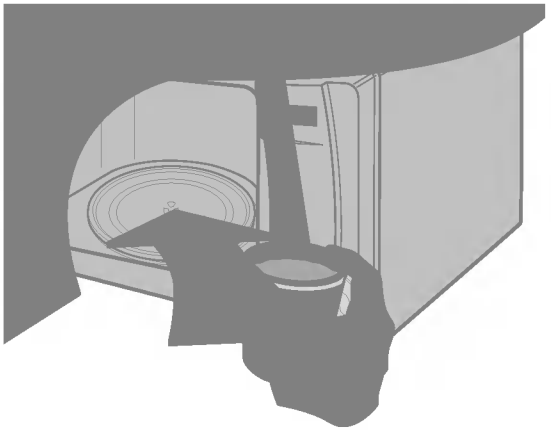

6 Press the **STOP/CLEAR** button, and press the **START** button 1 time to set 30 seconds of cooking time. You will hear a BEEP when you press the button.



7 The **DISPLAY** will count down from 30 seconds. When it reaches 0 it will sound BEEPS. Open the oven door and test the temperature of the water. If your oven is operating the water should be warm. **Be careful when removing the container it may be hot.**

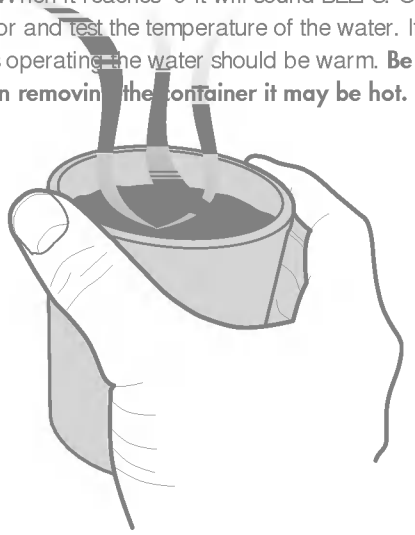

Setting the Clock

You can set either 12 hour clock or 24 hour clock .
In the following example I will show you how to set the time for 14:35 when using the 24 clock.
Make sure that you have removed all packaging from your oven.



When your oven is plugged in for the first time or when power resumes after a power cut, a '0' will be shown in the display; you will have to reset the clock.

If the clock (or display) shows any strange looking symbols, unplug your oven from the electrical socket and plug it back in and reset the clock.

During clock setting the colon will flash. After setting, the colon will stop/ clear flashing.

1

Make sure that you have correctly installed your oven as described earlier in this book.

Press **STOP/CLEAR .**



2

Press **CLOCK** once.

(If you want to use different option, Press **CLOCK** once.
If you want to change different option after setting clock,
you have to unplug and plug it back in.)



3

Press **10 MIN** fifteen times.
Press **1 MIN** five times.
Press **10 SEC** five times.

If the key (10 MIN / 1 MIN / 10 SEC) is pressed and held, the time will increase rapidly.



4

Press **CLOCK** to set the time.

The clock starts counting.



Child Lock



Your oven has a safety feature that prevents accidental running of the oven. Once the child lock is set, you will be unable to use any functions and no cooking can take place.
However your child can still open the oven door!

[illegible]



2

Press a[illegible]**STOP/CLEAR** until "**L**" appears in the display and BEEP sounds.
The **CHILD LOCK** is now set.

The time will disappear on the display if you have set the clock.



"**L**" [illegible]d to let you know that **CHILD LOCK** is set.



4

To cancel [illegible] **LOCK** press and hold **STOP/CLEAR** until "**L**" disappears.
You w[illegible]EEP when it's released.



Micro Power
Cooking

In the following example I will show you how to cook some food on 80% power for 5 minutes and 30 seconds.



Your oven has five microwave Power settings. High power is automatically selected but repeated presses of the **POWER** key will select a different power level .

POWER		
HIGH MAX	850W	100%
MEDIUM HIGH	680W	80%
MEDIUM	510W	60%
DEFROST MEDIUM LOW	340W	40%
LOW	170W	20%

1

Make sure you have correctly installed your oven as described earlier in this book.

Press **STOP/CLEAR.**



2

Press **POWER** once to select 80% power.

"680" appears on the display.



3

Press **1 MIN** five times.

Press **10 SEC** three times.



Press **START/QUICK START.**



Micro Power Level

Your microwave oven is equipped with 5 power levels to give you maximum flexibility and control over cooking. The table below shows the examples of food and their recommended cooking power levels for use with this microwave oven.



HIGH	100% (850W)	* Boil Water * Brown minced beef * Cook poultry pieces, fish, vegetables * Cook tender cuts of meat
MEDIUM HIGH	80% (680W)	* All reheating * Roast meat and poultry * Cook mushrooms and shellfish * Cook foods containing cheese and eggs
MEDIUM	60% (510W)	* Bake cakes and scones * Prepare eggs * Cook custard * Prepare rice, soup
DEFROST/ MEDIUM LOW	40% (340W)	* All thawing * Melt butter and chocolate * Cook less tender cuts of meat
LOW	20% (170W)	* Soften butter & cheese * Soften ice cream * Raise yeast dough

Two stage Cooking

In the following example I will show you how to cook some food in two stages. The first stage will cook your food for 11 minutes on HIGH; the second will cook for 35 minutes on 40%(340W).



During two stage cooking the oven door can be opened and food checked. Close the oven door and press **START** and the cooking stage will continue.

At the end of stage1, BEEP sounds and stage 2 commences.

Should you wish to clear the programme press **STOP/CLEAR** twice.

P[redacted]



2

Set the [redacted]d the cooking time **for stage1.**
Press **POW**[redacted]nce to select HIGH power.

Press **10 MIN** once.
Press **1 MIN** once.

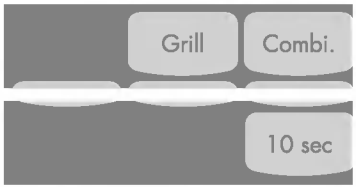

3

Set the [redacted]nd the cooking time **for stage2.**
Press **POW**[redacted]ur times to select 40% power.

Press **10 MIN** three times.
Press **1 MIN** five times.

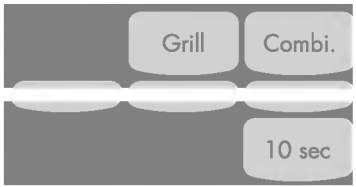

P[redacted]





The **QUICK START** feature allows you to set 30 seconds intervals of HIGH power cooking with a touch of the **START** key.

P



Press S times to select 2 minutes on HIGH power.
Your oven w rt before you have finished the fourth press.



During START cooking, you can extend the cooking time up to 10 minutes b peatedly pressing the **START** key.

Grill
Cooking

In the following example I will show you how to use the grill to cook some food for 12 minutes and 30 seconds.



This model is fitted with a **SHEATH GRILL**, so preheating is not needed.

This feature will allow you to brown and crisp food quickly.

The grill rack can be used in two positions - high or low, depending on food type and size.

GRILL RACK

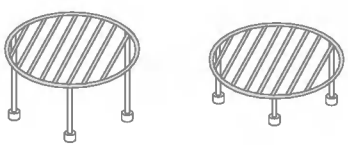

P[redacted]



Pr[redacted]



Set the [redacted] time.

Press [redacted]ce.
Press **1 MIN** twice.
Press **10 SEC** three times.



P[redacted]





Your oven has a grill + micro cooking feature which allows you to cook food with **heater** and **microwave** at the same time (or alternately). This generally means it takes less time to cook your food.

The **sheath heater** grills the surface of the food while **microwave** heats inside. Moreover, preheating your oven is not necessary.

P



2

Press C ee times.
"Co-3" app on the display.



3

Set the time.
Press **10 Mi** o times.
Press **1** e times.



4

Press **START**.
Whe ki ou can use MORE/ LESS keys to increase/ decrease cooking time.
Be careful when removing your food because the container will be hot!



Combi. Cooking Mode

CATEGORY	MICRO POWER (%)	HEATER POWER (%)
Co-1	20	80
Co-2	40	60
Co-3	60	40

Quick Defrost

Use this function to thaw only 0.5kg of Minced meat very quickly.
This will require a standing time to allow the center to thaw. In the following example will show you how to defrost 0.5kg of forzen minced meat.



Press **STOP/ CLEAR.**

1 Weight the food that you are about to defrost. Be certain to remove any metallic ties or wraps; then place the food in your oven and close the oven door.



Press **QUICK DEFROST** to select the **MEAT** defrosting programme.

2 The oven will start automatically.



During defrosting your oven will "BEEP", at which point open the oven door, turn food over and separate to ensure even thawing. Remove any portions that have thawed or shield them to help slow down thawing. After checking close the oven door and press **START/ QUICK START** to resume defrosting.

3

Your oven will not stop defrosting (even when the beep sounded) unless the door is opened.

QUICK DEFROST GUIDE

Use this function to defrost quickly for minced meat.

Remove the meat completely from it's wrapping. Place the mince onto a microwave-safe plate. When BEEP, at this point remove the mince from the microwave oven, turn the mince over and return to the microwave oven. Press start to continue. At the end of the program remove the mince from the microwave oven, cover with foil and allow to stand 5-15 minutes or until completely thawed.

CATEGORY	WEIGHT	UTENSIL	INSTRUCTIONS
Minced Meat	0.5kg	Microwave ware (Flat plate)	Minced meat Turn food over at beep. After defrosting, let stand for 5-15 minutes.

European Menu

In the following example I will show you how to cook 0.5 kg of Baked beans.



European Menu allows you to cook most of your favorite food easily by selecting the food type and entering the weight of food by pressing the More/ Less key.

CATEGORY	Press Auto Cook
OATMEAL	1 time
PASTA	2 times
BAKEN BEAN	3 times
HOTDOG	4 times
STEW	5 times
SCRAMBLED EGG	6 times
GRILLED FISH	7 times
SAUSAGE	8 times

Press **Menu** three times.
"Sc-3" appears in the display.

Select desired weight of Baked beans.
Press MORE five times to enter 0.5kg.

TRAT.









<table>
<tr><th>FOOD CATEGORY</th><th>WEIGHT LIMIT</th><th>UTENSILS</th><th>FOOD TEMP.</th><th>INSTRUCTIONS</th></tr>
<tr><td>1. OATMEAL</td><td>1- 4 serves</td><td>Microwave-safe bowl</td><td>Room</td><td>Place the oats and milk in a deep microwave- safe bowl.
Cook uncovered. The oven will beep, stir the oats well and press start to continue. After cooking, stir well and stand for 1 minute before serving.
<table>
<tr><td></td><td>1 serve</td><td>2 serves</td><td>3 serves</td><td>4 serves</td></tr>
<tr><td>Oats 1 package Approx. 40g</td><td>1/ 3 cup (1 package)</td><td>2/ 3 cups (2 packages)</td><td>1 cup (3 packages)</td><td>1 1/ 3 cups (4 packages)</td></tr>
<tr><td>Cold Milk</td><td>3/ 4 cup (180ml)</td><td>1 1/ 2 cups (360ml)</td><td>2 1/ 2 cups (540ml)</td><td>3 cups (720ml)</td></tr>
</table></td></tr>
<tr><td>2. PASTA</td><td>0. 1 kg - 0. 3 kg</td><td>Microwave-safe bowl</td><td>Room</td><td>Place pasta and boiling water with 1/ 4 to 1 teaspoon salt in a deep and large bowl.
<table>
<tr><td>Weight</td><td>100g</td><td>200g</td><td>300g</td><td>Cover</td></tr>
<tr><td>Boiling water</td><td>400ml</td><td>700ml</td><td>1000ml</td><td>No</td></tr>
</table>Cook uncovered. The oven will beep, stir the pasta well and press start to continue. After cooking, stir and stand for 1 minute if required. Rinse pasta with cold water.</td></tr>
<tr><td>3. BAKED BEANS, REHEAT</td><td>0.2 kg - 0. 8 kg</td><td>Microwave-safe dish</td><td>Room</td><td>Pour beans into the microwave- safe dish. Cover.
Place dish on the glass tray.
After reheating, stir and then stand for 1- 2 minutes with cover.</td></tr>
<tr><td>4. HOTDOGS INCLUDING BRINE</td><td>0.2 kg - 0. 6 kg</td><td>Microwave-safe bowl</td><td>Room</td><td>Place contents of can including brine in a microwave- save bowl.
Heat uncovered. After heating, stir well. Drain and serve.</td></tr>
<tr><td>5. STEW</td><td>0.2 kg - 0.6 kg</td><td>Microwave-safe bowl</td><td>Room</td><td>Place stew in a microwave- save bowl. Cover with wrap loosely.
After heating, stir well and stand for 2 minutes.</td></tr>
<tr><td>6. SCRAMBLED EGGS</td><td>1- 4 eggs</td><td>Microwave-safe bowl</td><td>Refrigerated</td><td>Place desired number of eggs and milk into a large bowl. Whisk slightly.
Cover with wrap. After cooking, remove from the oven.
Stir well and stand for 1- 2 minutes with cover until firm.
Add amount of milk according to the quantity.
** 1 egg : 1 Tablespoon of milk
2 eggs : 2 Tablespoons of milk
3 eggs : 3 Tablespoons of milk
4 eggs : 4 Tablespoons of milk</td></tr>
</table>

FOOD CATEGORY	WEIGHT LIMIT	UTENSILS	FOOD TEMP.	INSTRUCTIONS
7. GRILLED FISH	0.2-0.6kg	High rack	Refrigerated	Clean and dry. Place on the high rack. The oven will beep, turn food over and press start to continue. After cooking, remove from the oven. And serve.
8. SAUSAGE	0.1-0.5kg	High rack	Refigerated	Remove package. Place on the high rack. The oven will beep, turn food over and press start to contiune. After cooking, remove from the oven. And serve.



AUTO COOK allows you to cook most of your favorite food easily by selecting the food type and entering the weight of the food by pressing the MORE/ LESS key.

CATEGORY	Press Auto Cook
JACKET POTATO	1 time
FRESH VEGETABLE	2 times
FROZEN VEGETABLE	3 times
RICE	4 times
POPCORN	5 times
CHILLED PIZZA	6 times
SAUCE	7 times
CURRY	8 times

P



Press AUTO COOK once.
"Ac-1" appears on the display.

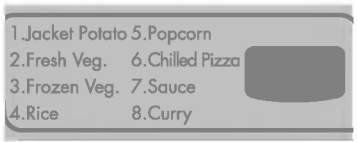

Select weight of potato.
Press MORE five times to enter 0.5kg.

If the MORE/ LESS keys are pressed and held, the weight will increase/ decrease rapidly.



Pr



<table>
<tr><th>FOOD CATEGORY</th><th>WEIGHT LIMIT</th><th>UTENSILS</th><th>FOOD TEMP.</th><th>INSTRUCTIONS</th></tr>
<tr><td>1. JACKET POTATO</td><td>0.1 kg ~ 1.0 kg</td><td>On glass tray</td><td>Room</td><td>Choose medium sized potatoes 170 - 200g.
Wash and dry potatoes. Pierce the potatoes several times with fork. Place the potatoes on the glass turntable. Adjust weight and press start. After cooking, remove the potatoes from the oven. Let stand covered with foil for 5 minutes.</td></tr>
<tr><td>2. FRESH VEGETABLE</td><td>0.2 kg ~ 0.8 kg</td><td>Microwave-safe bowl</td><td>Room</td><td>Place vegetables in a microwave-safe bowl. Add water.
Cover with wrap. After cooking, stir and allow to stand for
2 minutes. Add amount of water according to the quantity.
** 0.2kg - 0.4kg : 2 Tablespoon
** 0.5kg - 0.8kg : 4 Tablespoon</td></tr>
<tr><td>3. FROZEN VEGETABLE</td><td>0.2 kg ~ 0.8 kg</td><td>Microwave-safe bowl</td><td>Frozen</td><td>Place vegetables in a microwave-safe bowl. Add water.
Cover with wrap. After cooking, stir and allow to stand for
2 minutes. Add amount of water according to the quantity.
** 0.2kg - 0.4kg : 2 Tablespoon
** 0.5kg - 0.8kg : 4 Tablespoon</td></tr>
<tr><td>4. RICE</td><td>0.1 kg ~ 0.3 kg</td><td>Microwave-safe bowl</td><td>Room</td><td>Wash rice. Darin water.
Place rice & boiling water in a deep and large bowl.
<table><tr><td>Weight</td><td>100g</td><td>200g</td><td>300g</td><td>Cover</td></tr><tr><td>Boiling water</td><td>200ml</td><td>400ml</td><td>600ml</td><td>Yes / Vent corner</td></tr></table>** Rice - After cooking, stand covered for 5 minutes or until water is absorbed.</td></tr>
<tr><td>5. POPCORN</td><td>100 g</td><td>Microwave-safe bowl</td><td>Room</td><td>Use popcorn product for microwave oven.
Remove plastic overwrap.Place unfolded bag on the glass tray.
(Follow the package directions)
After popping, remove bag from the oven.
CAUTION : Product is HOT! Open bag carefully by pulling diagonally on corners.</td></tr>
</table>

FOOD CATEGORY	WEIGHT LIMIT	UTENSILS	FOOD TEMP.	INSTRUCTIONS
6. CHILLED PIZZA	0.1 kg ~ 0.4 kg	Microwave-safe flat dish	Refrigerated	This function is for reheating leftover chilled pizza. Place chilled pizza on the flat dish. After heating, stand for 1-2 minutes.
7. SAUCE	0.2 kg ~ 0.6 kg	Microwave-safe bowl	Room	Pour the sauce into a microwave-safe bowl. Cover with lid or plastic wrap. After heating, stir. Stand for 2 minutes with cover. And then stir again.
8. CURRY	0.2 kg ~ 0.8 kg	Microwave-safe dish	Room	Pour curry into the microwave-safe dish. Cover. Place dish on the glass tray. After reheating, stir and then stand for 1-2 minutes with cover.

Auto Defrost

The temperature and density of food varies, I would recommend that the food is checked before cooking commences. Pay particular attention to large joints of meat and chicken, some foods should not be completely thawed before cooking. For example fish cooks so quickly that it is sometimes better to begin cooking while still slightly frozen. The BREAD programme is suitable for defrosting small items such as rolls or a small loaf. These will require a standing time to allow the centre to thaw. In the following example I will show you how to defrost 1.4 kg of frozen poultry.



Your oven has four microwave defrost settings:- **MEAT, POULTRY, FISH** and **BREAD**; each defrost category has different power settings. Repeated presses of the **AUTO DEFROST** key will select a different setting.

Category	Press DEFROST	
MEAT	1	time
POULTRY	2	times
FISH	3	times
BREAD	4	times

1 Press **STOP/CLEAR.**
Weigh the food that you are about to defrost. Be certain to remove any metallic ties or wraps; then place the food in your oven and close the oven door.



2 Press **AUTO DEFROST** twice to select the **POULTRY** defrosting programme. "**dEF2**" appears on the display window.



3 Enter the weight of the frozen food that you are about to defrost.

Press [illegible] seven times to enter 1.4 Kg.



Press [illegible]



During defrosting your oven will "BEEP", at which point open the oven door, turn food over and separate to ensure even thawing. Remove any portions that have thawed or shield them to help slow down thawing. After checking close the oven door and press **START** to resume defrosting.
Your oven will not stop/clear defrosting (even when the beep sounds) unless the door is opened.

AUTO DEFROSTING GUIDE

* Food to be defrosted should be in a suitable microwave proof container and place uncovered on the glass turntable.
* If necessary, shield small areas of meat or poultry with flat pieces of aluminum foil. This will prevent thin areas becoming warm during defrosting. Ensure the foil does not touch the oven walls.
* Separate items like minced meat, chops, sausages and bacon as soon as possible.
  When BEEP, turn food over. Remove defrosted portions. Continue to defrost remaining pieces.
  After defrosting, allow to stand until completely thawed.
* For example joints of meat and whole chickens should STAND for a minimum of 1 hour before cooking.

Category	Weight Limit	Utensil	Food
Meat **Poultry** **Fish**	0.1 ~ 4.0 kg	Microwave ware (Flat plate)	**Meat** Minced beef, Fillet steak, Cubes for stew, Sirloin steak, Pot roast, Rump roast, Beef burger Pork chops, Lamp chops, Rolled roast, Sausage, Cutlets(.2cm) Turn food over at beep. After defrosting, let stand for 5-15 minutes. **Poultry** Whole chicken, Legs, Breasts, Turkey breasts(under 2.0kg) Turn food over at beep. After defrosting, let stand for 20-30 minutes. **Fish** Fillets, Steaks, Whole fish, Sea foods Turn food over at beep. After defrosting, let stand for 10-20 minutes.
Bread	0.1 ~ 0.5 kg	Paper towel or flat plate	Sliced bread, Buns, Baguette, etc.

Auto
Roast

In the following example I will show you how to cook 0.5 kg of Grilled shrimps.



Auto Roast allows you to cook most of your favorite food easily by selecting the food type and entering the weight of food by pressing the **More/Less** key.

CATEGORY	Press **Auto Roast**
Gratin	1 time
Lasagna	2 times
Grilled shrimp	3 times
Roast beef	4 times
Roast pork	5 times
Chicken pieces	6 times

P



Press A three times.
"Ar-3" appe on the display.



Select d ight of Grilled shrimps.
Press **More** k e times to enter 0.5kg.



P

1. GRATIN	0.5kg – 1. 2kg	Low tray	Room	Use this key to cook home made Gratins. Place food on the low rack. After cooking, remove from the oven and stand for 1~ 2 minutes. *** Potato Gratin *** **Ingredients** 400g potatoes 100g onions (cut into thin slices) 2/ 3 tablespoon butter 3 slices of bacon 350g white sauce 80g shredded mozzarella cheese Salt, black pepper **(White Sauce)** 3 tablespoon butter, 5 tablespoon flour, 2 1/ 2cups of milk Place butter in a large bowl. Microwave at HIGH until butter melts. Add flour and microwave for 2 minutes at HIGH. Add milk, salt and black pepper. Microwave at HIGH for15 minutes. (During cooking, stir several times.) **Method** 1. Bake potatoes with Jacket Potato Function. And then peel and slice into small size. Add salt, pepper. 2. Combine onions and butter in a bowl. Microwave at HIGH for 2 minutes. 3. Place one third of the white sauce in gratin dish. Add potatoes, onions and bacon. Cover with the rest of the white sauce. 4. Sprinkle with cheese. Place on low rack on the glass tray. After cooking, stand for 2~3 minutes.

2. LASAGNA	0.3kg-0.6kg	Low rack	Refrigerated	REMOVE CARTON & PROTECTIVE FILM ON DINNER. Place on the low rack. After cooking, remove from the oven and let stand for 1- 2 minutes.
3. GRILLED SHRIMP	0.1kg-0.6kg	High rack	Refrigerated	Clean and dry. Place on the high rack. The oven will beep, turn food over and press start to continue. After cooking, remove from the oven. And serve.
4. ROAST BEEF	0.5kg-1.5kg	Low rack	Refrigerated	Brush the beef with melted margarine or butter. Place on the low rack on the metal tray. The oven will beep, turn food over and press start to continue. After cooking, stand covered with foil for 10 minutes before serving.
5. ROAST PORK	0.5kg-1.5kg	Low rack	Refrigerated	Brush the pork with melted margarine or butter. Place on the low rack on the metal tray. The oven will beep, turn food over and press start to continue. After cooking, stand covered with foil for 10 minutes before serving.
6. CHICKEN PIECES	0.2kg-0.8kg	Low rack	Refrigerated	Wash and dry skin. Brush the chicken legs with melted margarine or butter. Place on the high rack on the glass tray. The oven will beep, turn food over and press start to continue. After cooking, stand covered with foil for 2-5 minutes.

More or Less
Cooking

In the following example I will show you how to change the preset AUTO COOK programmes for a longer or shorter cooking time.



Your food is cooking to how you like it by using the **AUTO ROAST** and **AUTO COOK** programme, there is no need to use the MORE/ LESS buttons.

Your food is cooked to your satisfaction by using the MORE/ LESS buttons all of the **AUTO COOK** programmes to be adjusted to cook your food for a longer or shorter time.

When cooking without Auto function you can extend the cooking time at any point using the MORE/ LESS key.
There is no need to stop/ clear the cooking process.





2

Set the ... **AUTO COOK** programme.

Select ... food.

Press **START**.



3

Press ...
The cooking ... will increase by **10** seconds for each press of the key.

Press **LESS** once.
The cooking time will decrease by **10** seconds for each press of the key.



Safety
Precautions

WARNING

*You should only use the microwave with the **GLASS TRAY** in place.*
*Always place the food in a container on the **GLASS TRAY**.*

1. Do not attempt to tamper with, or make any adjustments or repairs to the door, control panel, safety interlock switches or any other part of the oven. It is hazardous for anyone to carry out any service or repair operation which involves the removal of any cover which gives protection against exposure to microwave energy. Repairs should only be undertaken by a qualified service technician.
2. Do not operate the oven when empty. It is best to leave a glass of water in the oven when not in use. The water will safely absorb all microwave energy, if the oven is accidentally started.
3. Do not dry clothes in the microwave oven, which may become carbonized or burned if heated too long.
4. Do not cook food wrapped in paper towels, unless your cook book contains instructions, for the food you are cooking.
5. Do not use newspaper in place of paper towels for cooking.
6. Do not use wooden containers. They may heat-up and char. Do not use ceramic containers which have metallic (e.g. gold or silver) inlays. Always remove metal twist ties. Metal objects in the oven may arc, which can cause serious damage.
7. Do not operate the oven with a kitchen towel, a napkin or any other obstruction between the door and the front edges of the oven, which may cause microwave energy leakage.
8. Do not use recycled paper products since they may contain impurities which may cause sparks and/ or fires when used in cooking.
9. Do not rinse the turntable by placing it in water just after cooking. This may cause breakage or damage.
10. Small amounts of food require shorter cooking or heating time. If normal times are allowed they may overheat and burn.
11. Be certain to place the oven so the front of the door is 8 cm or more behind the edge of the surface on which it is placed, to avoid accidental tipping of the appliance.
12. Before cooking, pierce the skin of potatoes, apples or any such fruit or vegetable.
13. Do not cook eggs in their shell. Pressure will build up inside the egg which will burst.
14. Do not attempt deep fat frying in your oven.
15. Remove the plastic wrapping from food before cooking or defrosting. Note though that in some cases food should be covered with plastic film, for heating or cooking.
16. If the oven door or door seals are damaged, the oven must not be operated until it has been repaired by a qualified service technician.
17. If smoke is observed, switch off or disconnect the oven from the power supply and keep the oven door closed in order to stifle any flames.
18. When food is heated or cooked in disposable containers of plastic, paper or other combustible materials, check the oven frequently due to the possibility of ignition.
19. Only allow children to use the oven without supervision when adequate instructions have been given so that the child is able to use the oven in a safe way and understands the hazards of improper use.
20. Liquids or other foods must not be heated in sealed containers since they are liable to explode.

Microwave-safe Utensils

Never use metal or metal trimmed utensils in your microwave oven

Microwaves cannot penetrate metal. They will bounce off any metal object in the oven and cause arcing, an alarming phenomenon that resembles lightning.
Most heat resistant non metallic cooking utensils are safe for use in your microwave oven. However, some may contain materials that render them unsuitable as microwave cookware. If you have any doubts about a particular utensil, there's a simple way to find out if it can be used in your microwave oven.
Race the utensil in question next to a glass bowl filled with water in the microwave oven. Microwave at power HIGH for 1 minute. If the water heats up but the utensil remains cool to the touch, the utensil is microwave~safe. However, if the water does not change temperature but the utensil becomes warm, microwaves are being absorbed by the utensil and it is not safe for use in the microwave oven. You probably have many items on hand in your kitchen right now that can be used as cooking equipment in your microwave oven. Just read through the following checklist.

Dinner plates

Many kinds of dinner-ware are microwave-safe. If in doubt consult the manufacturer's literature or perform the microwave test.

Glassware

Glassware that is heat-resistant is microwave-safe. This would include all brands of oven tempered glass cookware. However, do not use delicate glassware, such as tumblers or wine glasses, as these might shatter as the food warms.

Plastic storage containers

These can be used to hold foods that are to be quickly reheated. However, they should not be used to hold foods that will need considerable time in the oven as hot foods will eventually warp or melt plastic containers.

Paper

Paper plates and containers are convenient and safe to use in your microwave oven, provided that the cooking time is short and foods to be cooked are low in fat and moisture. Paper towels are also very useful for wrapping foods and for lining baking trays in which greasy foods such as bacon are cooked. In general, avoid coloured paper products as the colour may run. Some recycled paper products may contain impurities which could cause arcing or fires when used in the microwave oven.

Plastic cooking bags

Provided they are made specially for cooking, cooking bags are microwave safe. However, be sure to make a slit in the bag so that steam can escape. Never use ordinary plastic bags for cooking in your microwave oven, as they will melt and rupture.

Plastic microwave cookware

A variety of shapes and sizes of microwave cookware are available. For the most part, you can probably use items you already have on hand rather than investing in new kitchen equipment.

Pottery, stoneware and ceramic

Containers made of these materials are usually fine for use in your microwave oven, but they should be tested to be sure.

CAUTION

Some items with high lead or iron content are not suitable for cooking utensils.
Utensils should be checked to ensure that they are suitable for use in microwave ovens.

Food characteristics &
Microwave cooking

Keeping an eye on things

The recipes in the book have been formulated with great care, but your success in preparing them depends on how much attention you pay to the food as it cooks. Always watch your food while it cooks. Your microwave oven is equipped with a light that turns on automatically when the oven is in operation so that you can see inside and check the progress of your food. Directions given in recipes to elevate, stir, and the like should be thought of as the minimum steps recommended. If the food seems to be cooking unevenly, simply make the necessary adjustments you think appropriate to correct the problem.

Factors affecting microwave cooking times

Many factors affect cooking times. The temperature of ingredients used in a recipe makes a big difference in cooking times. For example, a cake made with ice-cold butter, milk, and eggs will take considerably longer to bake than one made with ingredients that are at room temperature. All of the recipes in this book give a range of cooking times. In general, you will find that the food remains under-cooked at the lower end of the time range, and you may sometimes want to cook your food beyond the maximum time given, according to personal preference. The governing philosophy of this book is that it is best for a recipe to be conservative in giving cooking times. While overcooked food is ruined for good. Some of the recipes, particularly those for bread, cake, and custards, recommend that food be removed from the oven when they are slightly undercooked. This is not a mistake. When allowed to stand, usually covered, these foods will continue to cook outside of the oven as the heat trapped within the outer portions of the food gradually travels inward. If the food is left in the oven until it is cooked all the way through, the outer portions will become overcooked or even burnt. You will become increasingly skilful in estimating both cooking and standing times for various foods.

Density of food

Light, porous food such as cakes and breads cook more quickly than heavy, dense foods such as roasts and casseroles. You must take care when microwaving porous food that the outer edges do not become dry and brittle.

Height of food

The upper portion of tall food, particularly roasts, will cook more quickly than the lower portion. Therefore, it is wise to turn tall food during cooking, sometimes several times.

Moisture content of food

Since the heat generated from microwaves tends to evaporate moisture, relatively dry food such as roasts and some vegetables should either be sprinkled with water prior to cooking or covered to retain moisture.

Bone and fat content of food

Bones conduct heat and fat cooks more quickly than meat. Care must be taken when cooking bony or fatty cuts of meat that they do not cook unevenly and do not become overcooked.

Quantity of food

The number of microwaves in your oven remains constant regardless of how much food is being cooked. Therefore, the more food you place in the oven, the longer the cooking time. Remember to decrease cooking times by at least one third when halving a recipe.

Shape of food

Microwaves penetrate only about 2.cm into food, the interior portion of thick foods are cooked as the heat generated on the outside travels inward. Only the outer edge of food in cooked by microwave energy; the rest is cooked by conduction. The worst possible shape for a food that is to be microwaved is a thick square. The corners will burn long before the centre is even warm . Round thin foods and ring shaped foods cook successfully in the microwave.

Covering

A cover traps heat and steam which causes food to cook more quickly. Use a lid or microwave cling film with a corner folded back to prevent splitting.

Browning

Meats and poultry that are cooked fifteen minutes or longer will brown lightly in their own fat. Foods that are cooked for a shorter period of time may be brushed with a browning sauce such as worcestershire sauce, soy sauce or barbecue sauce to achieve an appetizing colour. Since relatively small amounts of browning sauces are added to food the original flavour of the recipe is not altered.

Covering with greaseproof paper

Greaseproofing effectively prevents spattering and helps food retain some heat. But because it makes a looser cover than a lid or clingfilm, it allows the food to dry out slightly.

Arranging and spacing

Individual foods such as baked potatoes, small cakes and hors d'oeuvres will heat more evenly if placed in the oven an equal distance apart, preferably in a circular pattern. Never stack foods on top of one another.

Stirring
Stirring is one of the most important of all microwaving techniques. In conventional cooking, food is stirred for the purpose of blending. Microwaved food, however, is stirred in order to spread and redistribute heat. Always stir from the outside towards the centre as the outside of the food heats first.

Turning over
Large, tall foods such as roasts and whole chickens should be turned so that the top and bottom will cook evenly. It is also a good idea to turn cut up chicken and chops.

Placing thicker portions facing outwards
Since microwaves are attracted to the outside portion of food, it makes sense to place thicker portions of meat, poultry and fish to the outer edge of the baking dish. This way, thicker portions will receive the most microwave energy and the food will cook evenly.

Shielding
Strips of aluminium foil (which block microwaves) can be placed over the corners or edges of square and rectangular foods to prevent those portions from overcooking. Never use too much foil and make sure the foil is secured to the dish or it may cause 'arcing' in the oven.

Elevating
Thick or dense foods can be elevated so that microwaves can be absorbed by the underside and centre of the foods.

Piercing
Foods enclosed in a shell, skin or membrane are likely to burst in the oven unless they are pierced prior to cooking. Such foods include yolks and whites of eggs, clams and oysters and whole vegetables and fruits.

Testing if cooked
Food cooks so quickly in a microwave oven, it is necessary to test it frequently. Some foods are left in the microwave until completely cooked, but most foods, including meats and poultry, are removed from the oven while still slightly undercooked and allowed to finish cooking during standing time. The internal temperature of foods will rise between 5°F (3°C) and 15°F (8°C) during standing time.

Standing time
Foods are often allowed to stand for 3 to 10 minutes after being removed from the microwave oven. Usually the foods are covered during standing time to retain heat unless they are supposed to be dry in texture (some cakes and biscuits, for example). Standing allows foods to finish cooking and also helps flavour blend and develop.

To Clean Your Oven

1. Keep the inside of the oven clean
Food spatters or spilled liquids stick to oven walls and between seal and door surface. It is best to wipe up spillovers with a damp cloth right away. Crumbs and spillovers will absorb microwave energy and lengthen cooking times. Use a damp cloth to wipe out crumbs that fall between the door and the frame. It is important to keep this area clean to assure a tight seal. Remove greasy spatters with a soapy cloth then rinse and dry. Do not use harsh detergent or abrasive cleaners. The glass tray can be washed by hand or in the dishwasher.

2. Keep the outside of the oven clean
Clean the outside of your oven with soap and water then with clean water and dry with a soft cloth or paper towel. To prevent damage to the operating parts inside the oven, the water should not be allowed to seep into the ventilation openings. To clean control panel, open the door to prevent oven from accidentally starting, and wipe a damp cloth followed immediately by a dry cloth. Press STOP/ CLEAR after cleaning.

3. If steam accumulates inside or around the outside of the oven door, wipe the panels with a soft cloth. This may occur when the microwave oven is operated under high humidity conditions and in no way indicates a malfunction of the unit.

4. The door and door seals should be kept clean. Use only warm, soapy water, rinse then dry thoroughly.
DO NOT USE ABRASIVE MATERIALS, SUCH AS CLEANING POWDERS OR STEEL AND PLASTIC PADS.
Metal parts will be easier to maintain if wiped frequently with a damp cloth.

Questions &
Answers

Q. What's wrong when the oven light will not glow?
A. There may be several reasons why the oven light will not glow.
Light bulb has blown
Door is not closed

Q. Does microwave energy pass through the viewing screen in the door?
A. No. The holes, or ports, are made to allow light to pass; they do not let microwave energy through.

Q. Why does the beep tone sound when a pad on the Control Panel is touched?
A. The beep tone sounds to assure that the setting is being properly entered.

Q. Will the microwave oven be damaged if it operates empty?
A. Yes Never run it empty or without the glass tray.

Q. Why do eggs sometimes pop?
A. When baking, frying, or poaching eggs, the yolk may pop due to steam build up inside the yolk membrane. To prevent this, simply pierce the yolk before cooking. Never microwave eggs in the shell.

Q. Why is standing time recommended after microwave cooking is over?
A. After microwave cooking is finished, food keeps on cooking during standing time. This standing time finishes cooking evenly throughout the food. The amount of standing time depends on the density of the food.

Q. Is it possible to pop corn in a microwave oven?
A. Yes, if using one of the two methods described below
1. Popcorn-popping utensils designed specifically for microwave cooking.
2. Prepackaged commercial microwave popcorn that contains specific times and power outputs needed for an acceptable final product.

FOLLOW EXACT DIRECTIONS GIVEN BY EACH MANUFACTURER FOR THEIR POPCORN PRODUCT. DO NOT LEAVE THE OVEN UNATTENDED WHILE THE CORN IS BEING POPPED. IF CORN FAILS TO POP AFTER THE SUGGESTED TIMES, DISCONTINUE COOKING. OVERCOOKING COULD RESULT IN THE CORN CATCHING FIRE.

CAUTION
NEVER USE A BROWN PAPER BAG FOR POPPING CORN. NEVER ATTEMPT TO POP LEFTOVER KERNELS.

Q. Why doesn't my oven always cook as fast as the cooking guide says?
A. Check your cooking guide again to make sure you've followed directions correctly, and to see what might cause variations in cooking time. Cooking guide times and heat settings are suggestions, chosen to help prevent overcooking, the most common problem in getting used to a microwave oven. Variations in the size, shape, weight and dimensions of the food require longer cooking time. Use your own judgement along with the cooking guide suggestions to test food condition, lust as you would do with a conventional cooker.

Warning

The wires in this mains lead are colored in accordance with the following codes
BLUE ~ Neutral
BROWN ~ Live
GREEN & YELLOW ~ Earth

As the colours of the wires in the mains lead of this appliance may not correspond with the coloured markings identifying the terminals in your plug proceed as follows:

The wire which is colored BLUE must be connected to the terminal which is marked with the letter N or Colored BLACK.

The wire which is colored BROWN must be connected to the terminal which is marked with the letter L or colored RED.

The wire which is colored GREEN & YELLOW or GREEN must be connected to the terminal which is marked with the letter E or ⏚ .

If the supply cord is damaged, it must be replaced by the manufacturer or its service agent or a similarly qualified person in order to avoid a hazard;

Technical Specification

		MB4344B/ MB4344BS
Power Input		230 V AC / 50 Hz
Output		850 W (IEC60705 rating standard)
Microwave Frequency		2450 MHz
Outside Dimension		507 mm(W) X 274 mm(H) X 435 mm(D)
Power Consumption	Microwave	1250 Watts
	Grill	1000 Watts
	Combination	2200 Watts

If the supplied flexible mains cord of this appliance is damaged, it must be replaced using the special mains cord part number : 6411W1A017L

This appliance is supplied with BS 1363 approved 13 Amp fused mains plug. When replacing the fuse always use a 13 Amp BS 1362 approved type. Never use this plug with the fuse cover omitted. To obtain a replacement fuse cover contact your supplying dealer or LG Electronics U.K. LTD.

If the mains sockets in your home differ, or are not suitable for the type of plug supplied then the plug should be removed and a suitable type fitted.

If the mains plug becomes severed from the mains lead it must be destroyed. A mains plug with bared wires is hazardous if engaged in a mains output line socket.

If a 13 Amp BS 1363 plug is not suitable or any other type of plug used, then this appliance must be protected by a 15 Amp fuse.

MAFF

Reheating Cooked Chilled Foods

MAFF

This microwave oven has been tested and labelled to the Ministry of Agriculture Fisheries and Food (MAFF) agreement, concerning the reheating of cooked chilled food.

The heating category represents the oven's ability to heat small quantities of food (approx. 350g), it does not represent the oven's general performance. The category (from the letter A to E) will help you to reheat small quantities of food such as microwavable ready meals. The greater heating category of the oven, the less heating time is required.

Displayed on the food packages will be the cooking times for each of the BAND categories. For example **A** may be 10 minutes. **B** may be 9 minutes etc depending on the food type.

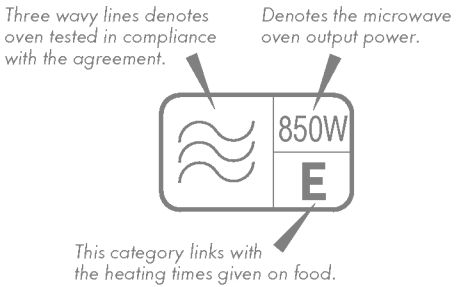

Technology with the human touch

GUARANTEE

LG ELECTRONICS U.K. LTD. WILL PROVIDE THE FOLLOWING SERVICES IN ORDER TO EXPEDITE THIS GUARANTEE.

1. All faulty components which fail due to defective manufacture will be replaced free of charge for a period of 12 months from the original date of purchase.
2. The dealer (or his Service Agent) who sold the product will be reimbursed for any labor provided in the repair of this LG electronics equipment, for a period of 12 months from the original date of purchase. These claims must be made in accordance with the published scale of service charges and relevant claims procedure.

PLEASE NOTE:

A. The dealer may restrict the guarantee to the original purchaser.
B. The dealer is not obliged to carry out service under guarantee if unauthorized modifications are made to the apparatus, or if non standard components are used or if the serial number of the apparatus is removed, defaced, misused, or altered.
C. Any claims made under guarantee must be directed to the dealer from whom the equipment was originally purchased. The dealer may, before carrying out service under guarantee, require a receipted account as evidence of the date of purchase.
D. We respectfully point out that your dealer is not obligated to replace batteries if they become exhausted or worn in use.
E. Aerial alignment and consumer control adjustments are not covered by this guarantee.

This guarantee does not affect your statutory rights.

REQUIREMENTS TO MAINTAIN WARRANTY COVERAGE:

RETAIN YOUR RECEIPT TO PROVE DATE OF PURCHASE. A COPY OF YOUR RECEIPT MUST BE SURRENDERED AT THE TIME GUARANTEE SERVICE IS PROVED.

PRODUCT REGISTRATION CARD: It is helpful to complete at least, your name, address, phone, model & serial numbers and return it. This will enable LG Electronics to assist you in the future should you lose your receipt, your units stolen, or should modification be necessary.

To obtain information or assistance: Call 01753 500470 Monday-Friday 9:00 am ~ 4:30 pm

MODEL	SERIAL# *	DATE OF PURCHASE

*** Please complete for your own record**

In all cases of difficulty - consult your LG dealer from whom the product was purchased.



<English>

Disposal of your old appliance

1. When this crossed-out wheeled bin symbol is attached to a product it means the product is covered by the European Directive 2002/96/EC.
2. All electrical and electronic products should be disposed of separately from the municipal waste stream via designated collection facilities appointed by the government or the local authorities.
3. The correct disposal of your old appliance will help prevent potential negative consequences for the environment and human health.
4. For more detailed information about disposal of your old appliance, please contact your city office, waste disposal service or the shop where you purchased the product.