# User's Guide

# T750PH plus
# T750BH plus

Make sure to read the **Important Precautions** before using the product.
Keep the User's Guide(CD) in an accessible place for furture reference.

See the label attached on the back cover and quote this information to your dealer when you require service.

LG

**This unit has been engineered and manufactured to ensure your personal safety, however improper use may result in potential eletrical shock or fire hazards. In order to allow the proper operation of all safeguards incorporated in this monitor, observe the following basic rules for its installation, use, and servicing. Keep it in an accessible place for future reference.**

## On Safety

Use only the power cord supplied with the unit. In case you use another power cord, make sure that it is certified by the applicable national standards if not being provided by the supplier. If the power cable is faulty in any way, please contact the manufacturer or the nearest authorized repair service provider for a replacement.

The power supply cord is used as the main disconnect device. Ensure that the socket-outlet is easily accessible after installation.

Operate the monitor only from a power source indicated in the specifications of this manual or listed on the monitor. If you are not sure what type of power supply you have in your home, consult with your dealer.

Overloaded AC outlets and extension cords are dangerous. So are frayed power cords and broken plugs. They may result in a shock or fire hazard. Call your service technician for replacement.

Hands must be dry when holding the power plug to avoid an electric shock.

Do not damage the power cord by disassembling, bending, pulling or heating up. It can cause fire or electric shock.

Make sure to completely insert the power plug. Insecure connections can cause fire.

Do not Open the Monitor.
- There are no user serviceable components inside.
- There are Dangerous High Voltages inside, even when the power is OFF.
- Contact your dealer if the monitor is not operating properly.

To Avoid Personal Injury :
- Do not place the monitor on a sloping shelf unless properly secured.
- Use only a stand recommended by the manufacturer.
- Do not try to roll a stand with small casters across thresholds or deep pile carpets.

To Prevent Fire or Hazards:

- Always turn the monitor OFF if you leave the room for more than a short period of time. Never leave the monitor ON when leaving the house.
- Keep children from dropping or pushing objects into the monitor's cabinet openings. Some internal parts carry hazardous voltages.
- Do not add accessories that have not been designed for this monitor.
- During a lightning storm or when the monitor is to be left unattended for an extended period of time, unplug it from the wall outlet.
- Do not bring magnetic devices such as magnets or motors near the picture tube.

## On Installation

Do not allow anything to rest upon or roll over the power cord, and do not place the monitor where the power cord is subject to damage.

Do not use this monitor near water such as near a bathtub, washbowl, kitchen sink, laundry tub, in a wet basement, or near a swimming pool.
Monitors are provided with ventilation openings in the cabinet to allow the release of heat generated during operation. If these openings are blocked, built-up heat can cause failures which may result in a fire hazard. Therefore, NEVER:

- Block the bottom ventilation slots by placing the monitor on a bed, sofa, rug, etc.
- Place the monitor in a built-in enclosure unless proper ventilation is provided.
- Cover the openings with cloth or other material.
- Place the monitor near or over a radiator or heat source.
- Do not install the monitor in a dusty area. It can cause fire.

## On Cleaning

- Unplug the monitor before cleaning the face of the monitor screen.
- Use a slightly damp (not wet) cloth. Do not use an aerosol directly on the monitor screen because overspray may cause electrical shock.

## On Repacking

- Do not throw away the carton and packing materials. They make an ideal container in which to transport the unit. When shipping the unit to another location, repack it in its original material.

**NOTE**

- THE MANUFACTURER IS NOT RESPONSIBLE FOR ANY RADIO OR TV INTERFERENCE CAUSED BY UNAUTHORIZED MODIFICATIONS TO THIS EQUIPMENT. SUCH MODIFICATIONS COULD VOID THE USER'S AUTHORITY TO OPERATE THE EQUIPMENT.

**NOTE**

- This equipment has been tested and found to comply with the limits for a class B digital device, pursuant to part 15 of the FCC Rules. These limits are designed to provide reasonable protection against harmful interference in a residential installation. This equipment generates, uses and can radiate radio frequency energy and, if not installed and used in accordance with the instructions, may cause harmful interference to radio communications. However, there is no guarantee that interference will not occur in a particular installation. If this equipment does cause harmful interference to radio or television reception, which can be determined by turning the equipment off and on, the user is encouraged to try to correct the interference by one or more of the following measures:
  -Reorient or relocate the receiving antenna.
  -Increase the separation between the equipment and the receiver.
  -Connect the equipment into an outlet on a circuit different from that to which the receiver is connected.
  -Consult the dealer or an experienced radio/TV technician for help.

- **Before setting up the monitor, ensure that the power is turned off to the monitor, computer system, and other attached devices.**
- **Carefully set the monitor face-down with the underside facing you.**

## Connecting the Tilt/Swivel stand

1. Align the hooks on the tilt/swivel stand with the matching slots in the base of the monitor.
2. Insert the hooks into slots.
3. Slide the tilt/swivel stand toward the front of the monitor until the latches click into the locked position.

**NOTE**

- This illustration depicts the general model of connection. Your monitor may differ from the items shown in the picture.

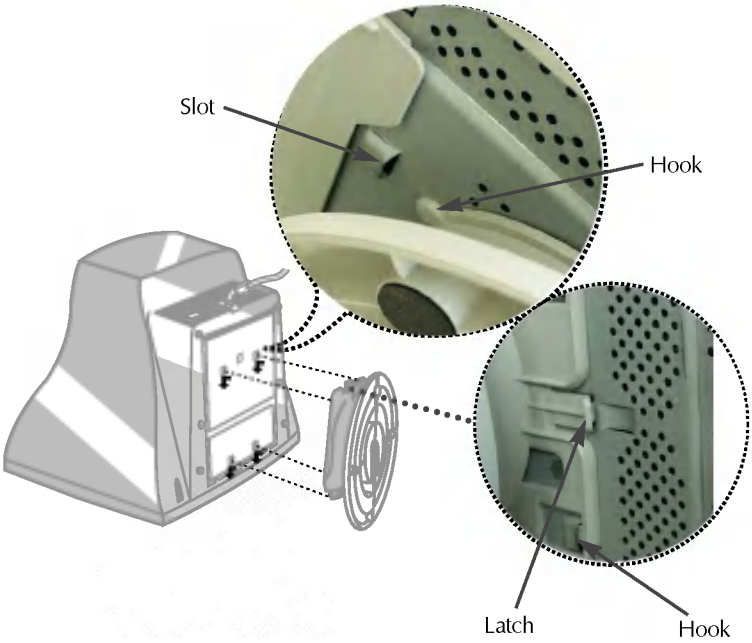

## Using the Computer

1. Connect the signal cable. When mated, tighten the thumbscrews to secure the connection.
2. Connect the power cord into a properly power outlet that is easily accessible and close to the monitor.

**NOTE**

- This is a simplified representation of the rear view.
- This rear view represents a general model; your monitor may differ from the view as shown.

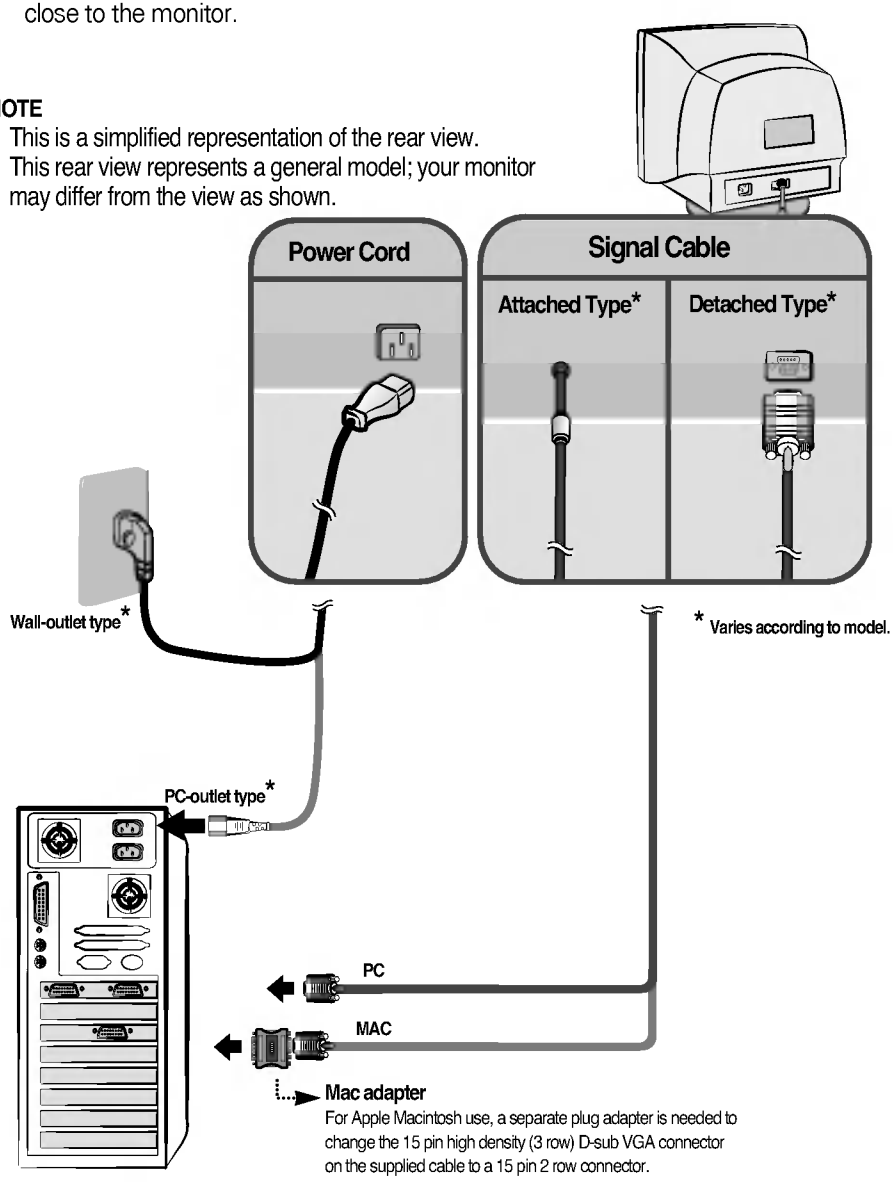

## Front Panel Controls

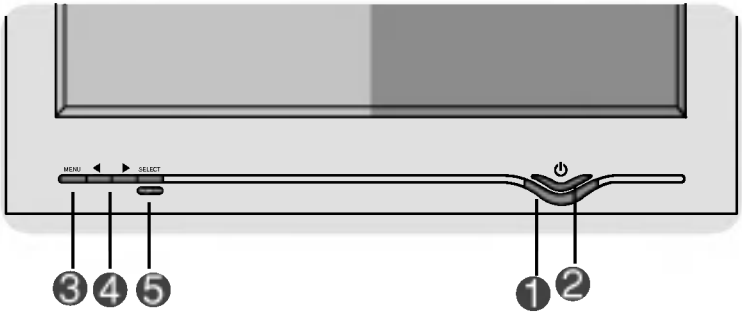


| Control | | Function |
|---|---|---|
| 1 | **Power Button** | Use this button to turn the monito on or off. |
| 2 | **Power (DPMS) Indicator** | This Indicator lights up blue when the monitor operates normally. If the monitor is in DPM (Energy Saving) mode, this indicator will flicker. |
| 3 | **MENU Button** | Use this button to enter or exit the on screen display. |
| 4 | **◄ ► Buttons** | Use these buttons to choose or adjust items in the on screen display. |
| 5 | **SELECT Button** | Use this button to enter a selection in the on screen display. |

| Control | Direct Access Function |
|---|---|
| CONTROLS LOCKED<br>CONTROLS UNLOCKED | **CONTROLS LOCKED/UNLOCKED**<br>**: MENU and ▶**<br>This function allows you to secure the current control settings, so that they cannot be inadvertently changed. Press and hold the MENU button and ▶ button for 5 seconds: the message "**CONTROLS LOCKED**" appears.<br>You can unlock the OSD controls at any time by pushing the MENU button and ▶ button for 5 seconds:<br>The message "**CONTROLS UNLOCKED**" will appear. |

## 5 BrightView

This function optimizes the brightness, contrast or color value to the surrounding conditions and settings.

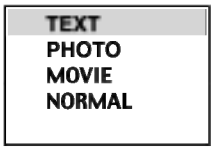


| MODE | DESCRIPTION |
|---|---|
| TEXT | This is convenient for using documents such as Word Processor or spreadsheet. |
| PHOTO | This is to view pictures or paintings with high resolution. |
| MOVIE | This mode is best for watching DVDs or still images with a dark background or playing games. |
| NORMAL | The screen goes back to the normal mode. |

## Screen Adjustment

**Making adjustments to the image size, position and operating parameters of the monitor is quick and easy with the On Screen Display Control system. A short example is quick and easy given below to familiarize you with the use of the controls. The following section is an outline of the available adjustments and selections you can make using the OSD.**

**NOTE**

- Allow the monitor to stabilize for at least 30 minutes before making image adjustments.

To make adjustments in the On Screen Display, follow these steps:

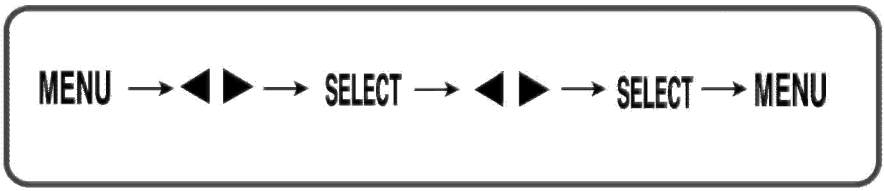


1. Press the **MENU Button**, then the main menu of the OSD appears.
2. To access a control, use the ◀ or ▶ **Buttons**. When the icon you want becomes highlighted, press the **SELECT Button**.
3. Use the ◀ ▶ **Buttons** to adjust the item to the desired level.
4. Accept the changes by pressing the **SELECT Button**.
5. Exit the OSD by Pressing the **MENU Button**.

**The following table indicates all the On Screen Display control, adjustment, and setting menus.**

| Icon | Main menu | |
|---|---|---|
| | Contrast | ● |
| | Brightness | ● |
| | H Position | ● |
| | H Size | ● |
| | V Position | ● |
| | V Size | ● |
| | Tilt* | ● |
| | Pincushion | ● |
| | Pin Balance | ● |
| | Parallelogram | ● |
| | Trapezoid | ● |
| | Top Corner* | ● |
| | Bottom Corner* | ● |
| | H Moire | ● |
| | V Moire | ● |
| | COLOR 9300 | ● |
| | 6500 | ● |
| | K | ● |
| | RGB | ● |
| | Recall | ● |
| | Reset | ● |
| | Language | ● |
| OSD | OSD Time | ● |
| | Video Level | ● |
| | Degauss | ● |
| | Information | ● |
| EXIT | Exit* | ● |

● : Adjustable

**NOTE**

- The order of icons may differ depending on the model (A9~A12).
- * This function is available for designated models only.

**You were introduced to the procedure of selecting and adjusting an item using the OSD system. Listed below are the icons, icon names, and icon descriptions of the all items shown on the Menu.**

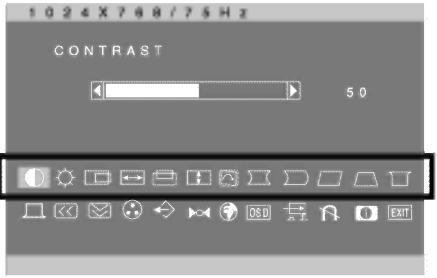


| Icon | Sub menu | Description |
|---|---|---|
| CONTRAST | | To adjust the contrast of the screen. |
| BRIGHTNESS | | To adjust the brightness of the screen. |
| H POSITION | | To move image left and right. |
| H SIZE | | To adjust image width. |
| V POSITION | | To move image up and down. |
| V SIZE | | To adjust image height. |
| TILT* | | To correct image rotation. PAGE A9 |
| PINCUSHION | | To correct a concave or convex bowing of the image. |
| PIN BALANCE | | To correct the balance of both sides bowing. |
| PARALLELOGRAM | | To correctly adjust the skew of the image. |
| TRAPEZOID | | To correct geometric distortion. |

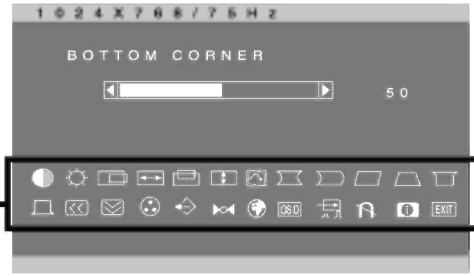


| Icon | Sub menu | Description |
|---|---|---|
| TOP CORNER* | | To correct an irregular distortion of the displayed image. PAGE A9 |
| BOTTOM CORNER* | | To correct an irregular distortion of the displayed image. PAGE A9 |
| H MOIRE<br>V MOIRE | | This item allows you to reduce the degree of moire. (Moire is caused by interference Horizontal Scan Line with the periodical dot screen). It is normally OFF(H:0/V:0).<br>The moire adjustments may affect the focus of the screen.<br>Moire adjustments may shake slightly while the moire reduction function is on. |
| COLOR | 9300 | Slightly bluish white. |
| | 6500 | Slightly reddish white. |
| | K | Select the screen temperature which you prefer among reddish or bluish or any color in between. |
| | R G B | Set your own color levels. |
| RECALL | • OK<br>• CANCEL | You can use this function to reload the modified parameters for screen display operation, as specified by the user after purchase: Position, Size, Side Pincushion, Side Pincushion Balance, Parallelogram, Trapezoid, Top Corner, Bottom Corner (These recalled options may differ depending on the mode selected: Preset, User, or New).<br>If you don't want to recall the monitor to these modified settings, use the ◄ ► button to select CANCEL and then press the SELECT button. |

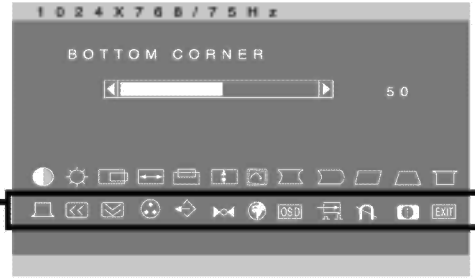


| Icon | Sub menu | Description |
|---|---|---|
| RESET | • OK<br>• CANCEL | Return to all factory default settings except "LANGUAGE": Brightness, Contrast, Tilt, Color 9300, Video Level, OSD Time, Moire (These reset options may differ depending on the mode selected: Preset, User, or New).<br>If you don't want to reset the monitor, use the ◄ ► button to select CANCEL and then press the SELECT button. |
| LANGUAGE | | To choose the language in which the control names are displayed.<br>OSD Menus are available in 12 languages: English, German, French, Spanish, Italian, Swedish, Finnish, Portuguese, Korean, Chinese , Russian and Polish. |
| OSD TIME | • 5<br>• 10<br>• 20<br>• 30<br>• 60 | Set the OSD time, i.e. the length of time a menu will remain on-screen before it shuts off automatically. Adjust the time to 5, 10, 20, 30 or 60 seconds. |
| VIDEO LEVEL | • 0.7V<br>• 1.0V | This item is used to select the monitor's input signal level. The normal level used for most PCs is 0.7V. If the screen becomes suddenly washed-out or blurred, please select 1.0V and try again. |
| DEGAUSS | | To manually demagnetize the screen to avoid showing incorrect images or colors. |
| INFORMATION | •PRESET MODE<br>•USER MODE | To inform users of preset and user mode data. |
| EXIT * | | To exit from current OSD menu.<br>PAGE A9 |

**Check the following before calling for service.**

## No image appears

| | |
|---|---|
| ❒ **Is the power cord of the monitor connected?** | • Check and see if the power cord is connected properly to the power outlet. |
| ❒ **Is the power indicator light on?** | • Press the Power button. |
| ❒ **Is the power on and the power indicator blue?** | • Adjust the brightness and the contrast. |
| ❒ **Is the power indicator flickering?** | • If the monitor is in power saving mode, try moving the mouse or pressing any key on the keyboard to bring up the screen. |
| ❒ **Do you see an "OUT OF FREQUENCY" message on the screen?** | • This message appears when the signal from the PC (video card) is out of horizontal or vertical frequency range of the monitor. See the 'Specifications' section of this manual and configure your monitor again. |
| ❒ **Do you see a "SELF DIAGNOSITICS" message on the screen?** | • This message appears when the signal cable between your PC and your monitor is not connected. Check the signal cable and try again. |

## The screen is flickering.

| | |
|---|---|
| ❒ **Is the vertical frequency less than 70Hz or is your monitor set to the interlaced mode?** | • Set the vertical frequency to 72Hz or higher, and consult the video card user manual for instructions on converting to a non-interlaced mode. (You can set this option under the Display icon of the Control Panel.) |
| ❒ **Do you have any magnetic material such as adapter, or highvoltage line near to your monitor?** | • Remove magnetic sources, such as power adapters, speakers, or high-voltage lines, away from the monitor. |
| ❒ **Do you hear a "~ding" sound while the monitor is flickering?** | • Use the normal degaussing function. This function clears the screen and reduces any screen blur that may occur due to the surrounding magnetic field. The screen may flicker for about 5 seconds, accompanied by a "~ding" sound. |

## The screen color is not normal.

| | |
|---|---|
| ❒ **Do you see basic discoloration (16 colors)?** | • Set the color depth to 256 colors or higher: use 'Control Panel' -> 'Display' -> 'Settings' -> 'Color Palette' |
| ❒ **Is the screen color unstable or monochrome?** | • Check the connection of the signal cable. Or pull out the video card of the PC and insert it again. |
| ❒ **Do you see black dots on the screen?** | • This is due to a small amount of foreign or abnormally florescent material that became fastened on the mask during manufacturing. It will not affect product performance. |
| ❒ **Do you see a partial blurring on the screen?** | • This happens due to interference from surrounding magnetic fields, as created when speakers, steel structures, or high-voltage lines are placed near the monitor. Remove any such materials from the immediate vicinity and use the DEGAUSS icon on the screen adjustment menu to fix the screen. |

## I see an after-image on the screen.

| | |
|---|---|
| ❒ **Do you see the after-image even when you turn off the monitor?** | • A premature aging of the monitor pixels may cause the prolonged display of a single image on the screen. Be sure to use a screen saver to maximize the service life of the monitor. |

## I see waves on the screen.

| | |
|---|---|
| ❒ **Do you see the wave directly on the screen?** | • This occurs in inverse proportion to the screen focus, which can be caused by a particular frequency or video card. Brighten the screen and use the 'MOIRE' icon on the screen adjustment menu to adjust the screen. |

## Have you installed the monitor driver?

| | |
|---|---|
| ❒ **Have you installed the monitor driver?** | • Be sure to install the monitor driver from the monitor driver CD (or diskette) that comes with your monitor. Or, you can also download the driver from our web site: http://www.lge.com. |

# Specifications

| | | |
|---|---|---|
| **Picture Tube** | 17 inches (16.0 inches viewable)<br>90 degree deflection<br>0.25mm dot pitch<br>AGARAS(Anti-Glare Anti-Reflective Anti-Static) coating | |
| **Sync Input** | Horizontal Freq. | 30 - 71kHz (Automatic) |
| | Vertical Freq. | 50 - 160Hz (Automatic) |
| | Input Form | Separate TTL, Positive/Negative |
| | Signal Input | 15 pin D-Sub Connector |
| **Video Input** | Input Form | Separate, RGB Analog, 0.7Vp-p/75 ohm, Positive |
| **Resolution** | Max | VESA 1280 x 1024 @ 60Hz |
| | Recommend | VESA 1024 x 768 @ 85Hz |
| **Plug&Play** | DDC 2B | |
| **Power Consumption** | On | ≤ 68W |
| | Sleep | ≤ 4W |
| | Off | ≤ 2W |
| **Dimensions &Weight (with tilt/ swivel stand)** | Width | 40.0 cm / 15.75 inches |
| | Height | 40.1 cm / 15.79 inches |
| | Depth | 41.1 cm / 16.18 inches |
| | Net | 15.0 kg (33 lbs) |
| **Power Input** | AC 100-240V 50/60Hz 2.0A | |
| **Environmental Conditions** | Operating Conditions | |
| | Temperature | 0°C to 40 °C |
| | Humidity | 10 % to 90 % non-Condensing |
| | Storage Conditions | |
| | Temperature | -20°C to 60 °C |
| | Humidity | 5 % to 90 % non-Condensing |
| **Tilt/Swivel Stand** | Attached( ), Detached ( O ) | |
| **Signal cable** | Attached( O ), Detached ( ) | |
| **Power cord** | Wall-out type or PC-outlet type | |

**NOTE**

- Information in this document is subject to change without notice.

## Preset Modes (Resolution)

| Display Modes (Resolution) | | | Horizontal Freq. (kHz) | Vertical Freq. (Hz) |
|---|---|---|---|---|
| 1 | VESA | 640 x 480 | 37.50 | 75 |
| 2 | VESA | 800 x 600 | 46.88 | 75 |
| 3 | VESA | 800 x 600 | 53.674 | 85 |
| 4 | VESA | 1024 x 768 | 68.677 | 85 |
| 5 | VESA | 1280 x 768 | 60.289 | 75 |

Digitally yours

