LG

MINI HI-FI System

OWNER'S MANUAL

MODEL : LM-U1560
(LM-U1560A/D/X, LMS-U1560W, LMS-U1560)
LM-U1060
(LM-U1060A/D/X, LMS-U1060)
LM-U560
(LM-U560A/D/X, LMS-U560)
LM-U360
(LM-U360A/D/X, LMS-U360)

Please read this manual carefully before operating your set. Retain it for future reference.

Designs and specifications are subject to change without notice for improvement.

USB
Plays Windows Media™
XTS pro eXcellent True Sound
MP3 CD-R/RW
COMPACT disc DIGITAL AUDIO

Safety Precautions

CAUTION

RISK OF ELECTRIC SHOCK
DO NOT OPEN

WARNING: TO REDUCE THE RISK
OF ELECTRIC SHOCK
DO NOT REMOVE COVER (OR BACK)
NO USER-SERVICEABLE PARTS INSIDE
REFER SERVICING TO QUALIFIED SERVICE
PERSONNEL.



This lightning flash with arrowhead symbol within an equilateral triangle is intended to alert the user to the presence of uninsulated dangerous voltage within the product's enclosure that may be of sufficient magnitude to constitute a risk of electric shock to persons.



The exclamation point within an equilateral triangle is intended to alert the user to the presence of important operating and maintenance (servicing) instructions in the literature accompanying the appliance.

WARNING: TO REDUCE THE RISK OF FIRE OR ELECTRIC SHOCK, DO NOT EXPOSE THIS PRODUCT TO RAIN OR MOISTURE.

CAUTION: Do not block any ventilation openings. Install in accordance with the manufacturer's instructions.

Slots and openings in the cabinet are provided for ventilation and to ensure reliable operation of the product and to protect it from over heating.
The openings should be never be blocked by placing the product on a bed, sofa, rug or other similar surface. This product should not be placed in a built-in installation such as a bookcase or rack unless proper ventilation is provided or the manufacturer's instruction have been adhered to.

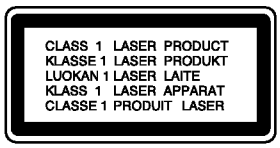

CAUTION:

This Product employs a Laser System.

To ensure proper use of this product, please read this owner's manual carefully and retain for future reference, should the unit require maintenance, contact an authorized service location-see service procedure.

Use of controls, adjustments or the performance of procedures other than those specified herein may result in hazardous radiation exposure.

To prevent direct exposure to laser beam, do not try to open the enclosure. Visible laser radiation when open. DO NOT STARE INTO BEAM.

CAUTION: The apparatus shall not be exposed to water, dripping or splashing and that no objects filled with liquids, such as vases, shall be placed on the apparatus.

CAUTION:
VISIBLE AND INVISIBLE LASER RADIATION WHEN OPEN AND INTERLOCKS DEFEATED

CAUTION concerning the Power Cord

Most appliances recommend they be placed upon a dedicated circuit;
That is, a single outlet circuit which powers only that appliance and has no additional outlets or branch circuits. Check the specification page of this owner's manual to be certain.

Do not overload wall outlets. Overloaded wall outlets, loose or damaged wall outlets, extension cords, frayed power cords, or damaged or cracked wire insulation are dangerous. Any of these conditions could result in electric shock or fire. Periodically examine the cord of your appliance, and if its appearance indicates damage or deterioration, unplug it, discontinue use of the appliance, and have the cord replaced with an exact replacement part by an authorized servicer.

Protect the power cord from physical or mechanical abuse, such as being twisted, kinked, pinched, closed in a door, or walked upon. Pay particular attention to plugs, wall outlets, and the point where the cord exits the appliance.



Disposal of your old appliance

1. When this crossed-out wheeled bin symbol is attached to a product it means the product is covered by the European Directive 2002/96/EC.
2. All electrical and electronic products should be disposed of separately from the municipal waste stream via designated collection facilities appointed by the government or the local authorities.
3. The correct disposal of your old appliance will help prevent potential negative consequences for the environment and human health.
4. For more detailed information about disposal of your old appliance, please contact your city office, waste disposal service or the shop where you purchased the product.

Power Save Mode

You can set up the unit into an economic power save mode.

In power-on status, press and hold POWER (⏻ STANDBY/ON) button for about 3 seconds.
- Nothing is displayed in the display window when the unit is turned off.

To cancel, press POWER (⏻ STANDBY/ON).

Table of Contents

INTRODUCTION

Safety Precautions 2
Table of Contents 3
Before Use 4
Safety Precautions 4
Notes on Discs 4
Notes on Remote Control 4
Notes on Tapes 4
Front Panel/Rear Panel 5
Remote Control 6
Connections 7
Connecting to Antenna 7
Connecting to Auxiliary Equipment 7
Speaker System Connection 8

PREPARATION

Audio Adjustment 9-11
Setting the CLOCK 9
Volume Adjustment 9
Sleep Timer Function 9
Using Microphone 9
Timer Function 10
EQUALIZER Effect 11
DEMO 11
XDSS plus(Extreme Dynamic Sound System) 11
MUTE 11
XTS Pro 11
DIMMER 11
DISPLAY MODE 11

RDS Function - OPTIONAL 12
About RDS 12
Programme Search (PTY) 12

OPERATION

Operation with RADIO 13
Presetting the radio stations 13
Listening to the radio 13

Operation with TAPE 14
Basic Playback 14
To Stop Play 14
To Play Rewind or Fast Forward 14
Dubbing 14

Recording 14
Basic Setting 14
Recording from Radio, CD or Auxiliary source . . 14
CD to Tape Synchronized Recording 14

CD Playback 15-16
Basic Playback 15
To Pause Play 15
To Stop Play 15
To Skip a Track 15
To Search a Track 15
To Go to the next discs 15
To Select a disc directly 15
To Replace discs during Playback 15
To check MP3 file information 15
To Play tracks in random order 16
To Repeat Play 16
MP3 file disc folder function 16
To Program Play 16

USB FUNCTION 17
Basic Playback 17
To Remove the USB from the unit 17
Moving to other cards 17

REFERENCE

Troubleshooting 18
Additional Information 18
Specifications 19

About the symbols for instructions

⚠ Indicates hazards likely to cause harm to the unit itself or other material damage.

Indicates special operating features of this unit.

Before Use

Safety Precautions

Handling the unit

When shipping the unit

The original shipping carton and packing materials come in handy. For maximum protection, re-pack the unit as it was originally packed at the factory.

To keep the surface clean

Do not use volatile liquids, such as insecticide spray, near the unit. Do not leave rubber or plastic products in contact with the unit for a long period of time.
They will leave marks on the surface.

Cleaning the unit

To clean the cabinet

Use a soft, dry cloth. If the surfaces are extremely dirty, use a soft cloth lightly moistened with a mild detergent solution. Do not use strong solvents, such as alcohol, benzine, or thinner, as these might damage the surface of the unit.

Notes on Discs

Handling discs

Do not touch the playback side of the disc.
Hold the disc by the edges so that fingerprints will not get on the surface.
Do not stick paper or tape on the disc.



Storing discs

After playing, store the disc in its case.
Do not expose the disc to direct sunlight or sources of heat, or leave it in a parked car exposed to direct sunlight, as there may be a considerable temperature increase inside the car.

Cleaning discs

Fingerprints and dust on the disc can cause sound distortion. Before playing, clean the disc with a clean cloth. Wipe the disc from the center out.

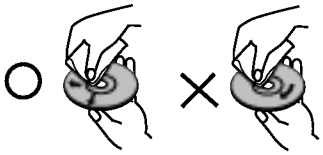

Do not use strong solvents such as alcohol, benzine, thinner, commercially available cleaners, or anti-static spray intended for analog records.

Notes on Remote Control

Remote Control Operation Range

Point the remote control at the remote sensor and press the buttons.

- **Distance:** About 23 ft (7 m) from the front of the remote sensor.
- **Angle:** About 30° in each direction of the front of the remote sensor.

Remote control battery installation

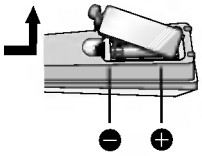

Detach the battery cover on the rear of the remote control, and insert two R03 (size AAA) batteries with ⊕ and ⊖ aligned correctly.

⚠**Caution**

Do not mix old and new batteries. Never mix different types of batteries (standard, alkaline, etc.).

Notes on Tapes

Preventing record

Removing the tab(s) of the cassette (with a small screwdriver) will prevent accidental erasure.

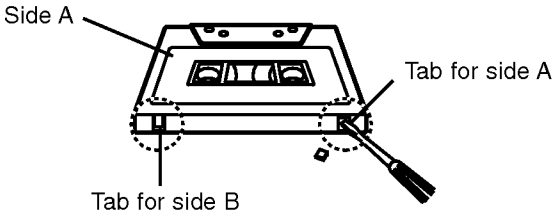

To record again, cover the hole of the tab with adhesive tape.

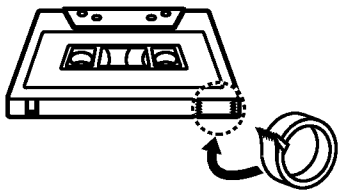

Adhesive tape.

Front Panel/Rear Panel

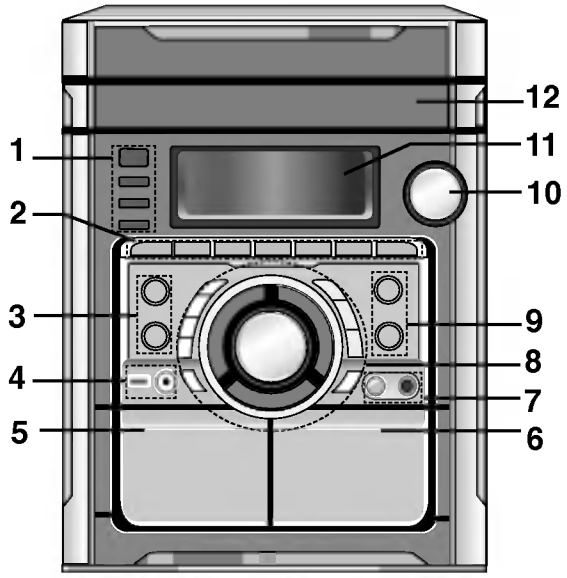

1. • POWER (⏻ STANDBY/ON) button
   • CLOCK button
   • TIMER button
   • PLAY MODE, DEMO button
2. • RECORD/RECORD PAUSE (●II) button
   • CD SEARCH(◀◀/▶▶),TAPE REWIND/ FAST FORWARD (◀◀/▶▶), TUNING UP/DOWN (TUNER) buttons
   • PRESET UP/DOWN buttons
   TAPE REVERSE PLAY(◀) / TAPE(CD) PLAY(▶) buttons
   • STOP/CLEAR (■) button
   • OPEN/CLOSE (⏏) button
3. • CD function button
   • USB function button
4. • USB connector
   • HEADPHONE SOCKET (PHONES): ∅3.5 mm
5. ⏏ PUSH EJECT position (TAPE 1)
6. ⏏ PUSH EJECT position (TAPE 2)
7. • MIC VOLUME KNOB (MIC VOL.)
   • MIC JACK (MIC):∅6.3 mm
8. • PROGRAM MEMORY (PROG.MEMO) button
   • STEREO/MONO (ST./MONO), HIGH DUBBING (HI-DUBB.) button
   • CD SYNCHRO RECORDING (CD SYNC.), NORMAL DUBBING (NOR.DUBB.) button
   • SET/CDII, RDS (OPTIONAL) button
   • XDSS plus button
   • XTS Pro button
   • EQ master button
   • VOLUME CONTROL KNOB
   • DISC SELECT buttons (DISC1, DISC2, DISC3)
   • DISC SKIP button

LM-U1560 Model

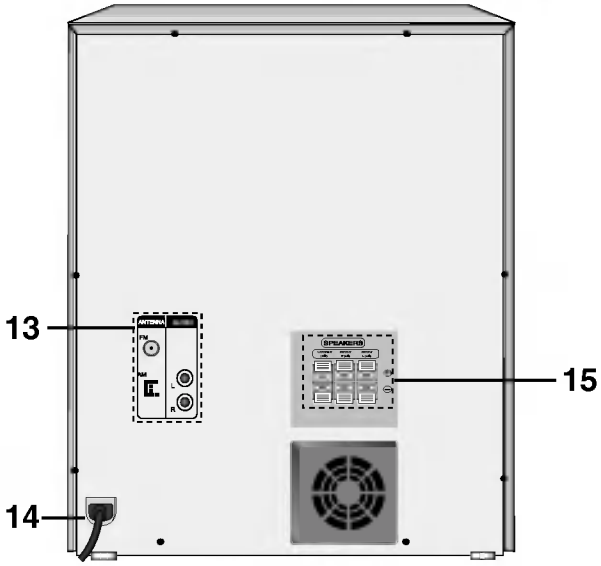

LM-U1060 Model

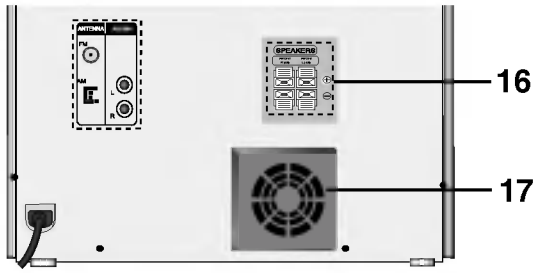

LM-U560/U360 Model

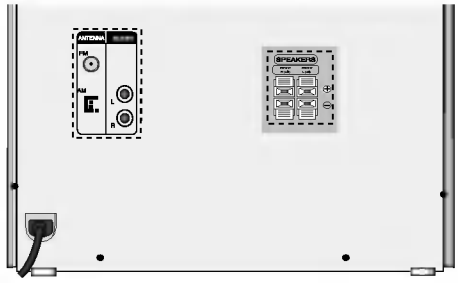

9. • TUNER function button
   • TAPE function button
10. MULTI JOG
11. DISPLAY WINDOW
12. DISC DOOR
13. • FM/AM ANTENNA Connector
   • AUXILIARY INPUT (AUX IN) connector
14. POWER CORD
15. SPEAKER Connectors - LM-U1560 model
16. SPEAKER Connectors - LM-U1060 /U560/U360 model
17. COOLER FAN (Only LM-U1560/U1060)

Remote Control

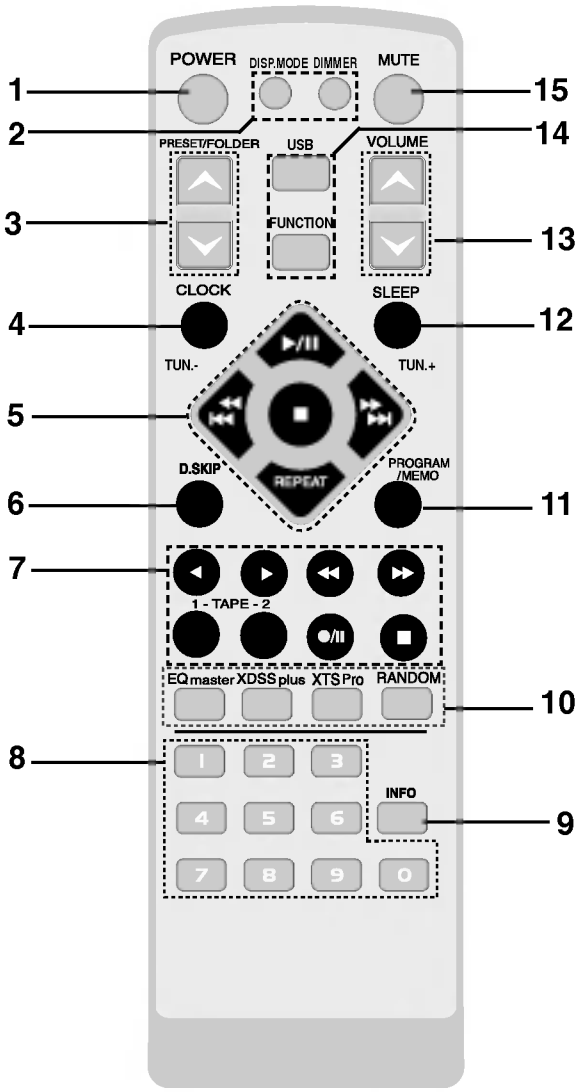

1. POWER button
2. DISPLAY (DISP.MODE) button
   DIMMER button
3. PRESET/FOLDER (⋁/⋀) buttons
4. CLOCK button
5. CD FUNCTION buttons
   - PLAY/ PAUSE (▶/II) button
   - CD STOP(■) button
   - CD SKIP/SEARCH (⏮◀◀/▶▶⏭) buttons
   - (TUN.-/+) buttons -TUNER
   - REPEAT button
6. DISC SKIP (D.SKIP) button
7. TAPE FUNCTION buttons
   - FORWARD PLAY (▶) button
   - REVERSE PLAY (◀) button : OPTIONAL
   - FAST FORWARD (▶▶) button
   - REWIND (◀◀) button
   - TAPE-1/2 SELECT buttons
   - RECORD/ RECORD PAUSE (●/II) button
   - TAPE STOP (■) button
8. NUMBER buttons
9. MP3 file information display (INFO) button
10. • EQ master button
    • XDSS plus button
    • XTS Pro button
    • RANDOM button
11. PROGRAM/MEMO button
12. SLEEP button
13. VOLUME CONTROL (⋁/⋀) button
14. • USB button
    • FUNCTION button
15. MUTE button

Connections

Connecting to Antenna

Connect the supplied FM/AM antennas for listening to the radio.

- Connect the AM loop antenna to the AM antenna connector.
- Connect the FM wire antenna to the FM antenna connector.

LM-U1560 Model

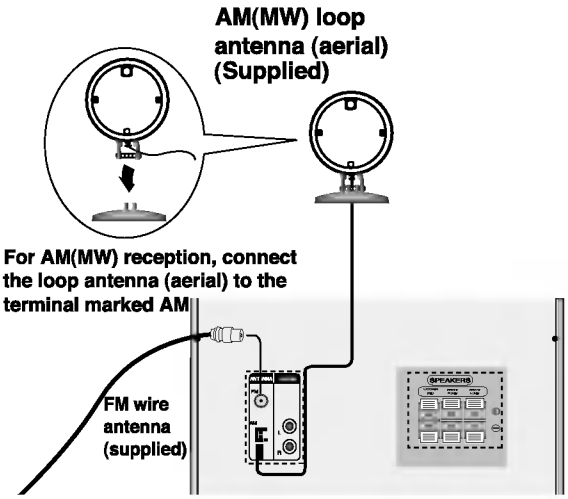

LM-U1060/U560/U360 Model

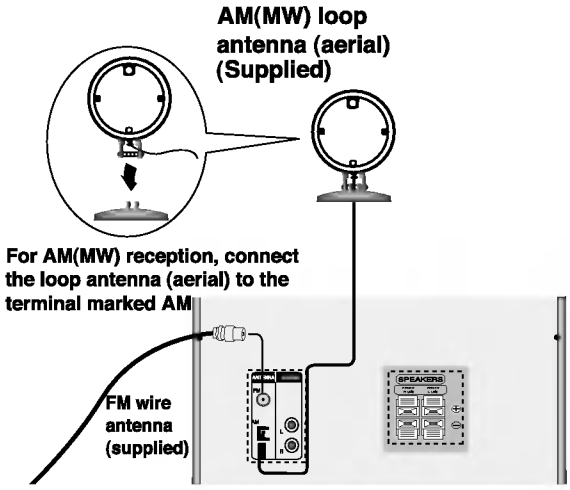

Notes

- To prevent noise pickup, keep the AM loop antenna away from the unit and other component.
- Be sure to fully extend the FM wire antenna.
- After connecting the FM wire antenna, keep it as horizontal as possible.

Connecting to Auxiliary Equipment

You can use VCR or other unit connected to the AUX connector.
This unit receives the analog signal from auxiliary equipment.

LM-U1560 Model

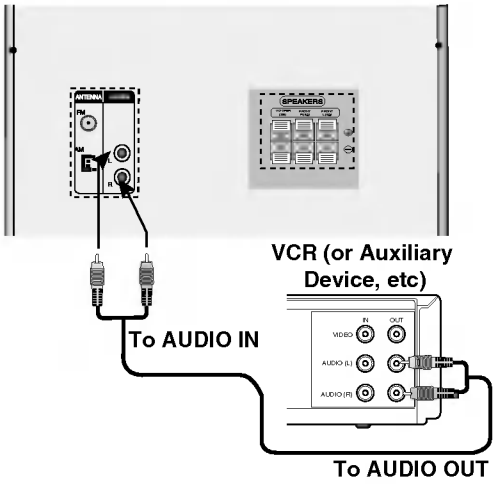

LM-U1060/U560/U360 Model

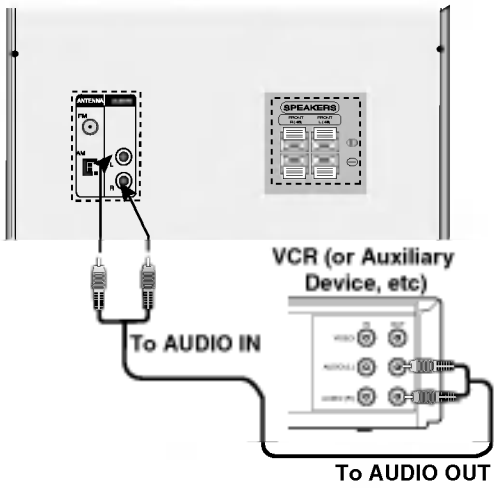

1 **Connect a VCR or auxiliary device, etc to the AUX connector.**

2 **Press the AUX button on the front panel(or FUNCTION button on the remote control) until the "AUX" indicator is displayed in the display window.**

Connections

Speaker System Connection

Connect the speakers using the supplied speaker cables by matching the colors of the terminals and those of the cords. To obtain the best possible surround sound, adjust the speaker parameters (distance, level, etc.).

LM-U1560 Model

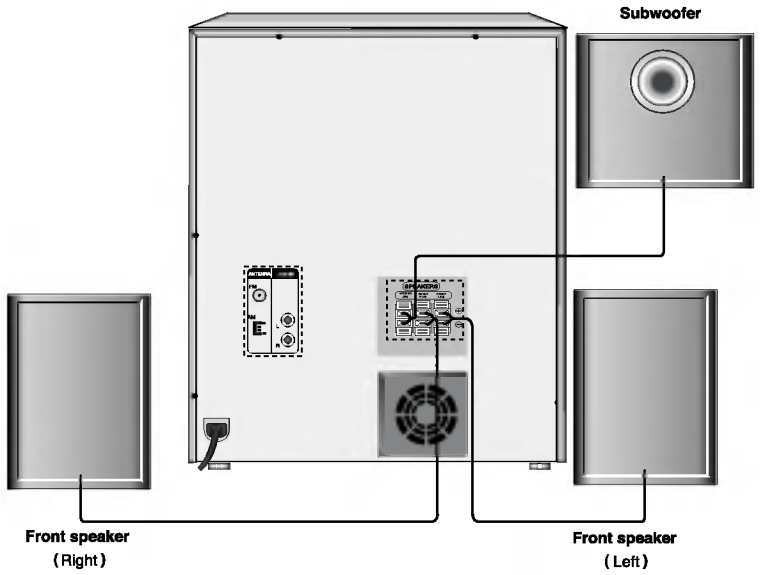

LM-U1060 Model

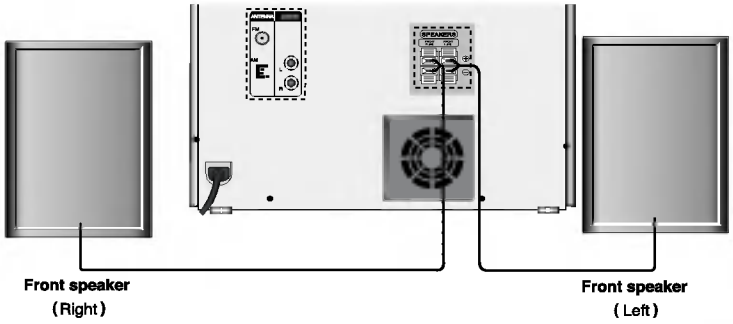

LM-U560/U360 Model

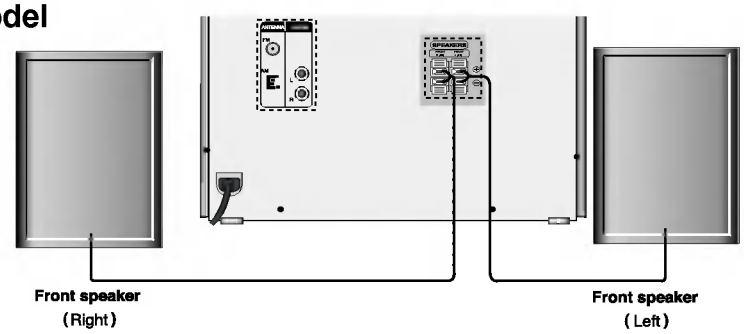

Notes

- Be sure to match the speaker cord to the appropriate terminal on the components: + to + and – to –. If the cords are reversed, the sound will be distorted and will lack base.
- If you use front speakers with low maximum input rating, adjust the volume carefully to avoid excessive output on the speakers.
- Connect the Front Left/Right speaker correctly. If it is reversed, the sound may be distorted.

Audio Adjustment

Setting the CLOCK

1 **Press CLOCK.**
(If the clock requires setting, press and hold **CLOCK** for more than 2 seconds.)
- The hours begin to blink.

2 **Select a 24 hour cycle or 12 hour cycle by turning MULTI JOG .**



(12HR) or (24HR)

3 **Press SET/CD▮▮ to confirm the selected hour cycle.**

4 **Use MULTI JOG to set the correct hours.**

5 **Press SET/CD▮▮**

6 **Use MULTI JOG to set the correct minutes.**

7 **Press SET/CD▮▮ and the correct time is shown on the display.**

8 **Press CLOCK at any time briefly to see the time.**

Volume Adjustment

- Turn **VOLUME CONTROL KNOB** clockwise to increase the sound level, or counterclockwise to decrease it.
- Press **VOLUME (^)** to increase the sound level, or press the **VOLUME (v)** to decrease it on the remote control.

Headphone Socket

Connect a stereo headphone plug (ø 3.5mm) into the headphone jack.
The speakers are automatically disconnected when you plug in the headphones (not supplied).

Sleep Timer Function

When the sleep timer is set, the unit automatically turns off after the specified time has elapsed.

1 **To specify the time delay before the power is turned off, press SLEEP.**
In the display window you can see *SLEEP 180* for about 5 seconds. This means that the system turns off automatically after 180 minutes.

2 **Each time you press SLEEP the setting changes in the following order.**
SLEEP 180 →150 → 120 →90→80→70 → 60→ 50 → 40 → 30 → 20 →10 → OFF (No display) →SLEEP 180...

3 **To check the remaining time until the power is turned off.**
While the sleep function is active press **SLEEP** briefly. The time remaining until the unit turns off is displayed for about 5 seconds.

Note
If you press **SLEEP** while the sleep time is displayed, the SLEEP time is reset.

To cancel Sleep Timer setting

If you wish to stop the function, press the **SLEEP** button repeatedly until "*SLEEP 10*" appears, and then press **SLEEP** once again after "*SLEEP 10*" shows on the display.

Using Microphone

You can sing to a music source by connecting a microphone to the unit.

1 **Connect your microphone to the MIC socket.**
"🎤" will be shown in the display window.

2 **Play the music you want.**

3 **Sing along with the accompaniment.**
Adjust the microphone volume by turning MIC VOLUME KNOB. (MIN - MAX)

Notes
- When not using the microphone, set the MIC volume knob to minimum or turn off the MIC and remove the microphone from the MIC socket.
- If the microphone is set too near the speaker, a howling sound may be produced. In this case, move the microphone away from the speaker or decrease the sound level by using the MIC volume control.
- If sound through the microphone is extremely loud, it may be distorted. In this case, turn the MIC volume control toward minimum.

Audio Adjustment

Timer Function

With the TIMER function you can have the radio reception, CD play, USB play and TAPE play turned on and off at the time desired.

1 **Press CLOCK to check the current time.**

For your reference
If you don't set clock, timer function doesn't work.

2 **Press TIMER to enter the timer setting mode.**
"TUNER→CD →USB→TAPE" flash in the display window in turn.

For your reference
If you want to correct the previous memorized TIMER setting, press and hold the **TIMER** button more than 2 seconds.
- The previous memorized timer setting for on Time and "⏲" indicator appears in the display window.

3 **Press SET/CDII when the desired function flashes.**

4 **1. a. When you select TUNER function, 'PLAY' and 'REC' indicator flash in the display window alternately for about 3 seconds.**
'PLAY' indicator : TUNER play only
'REC' indicator : TUNER play and recording

b. Press SET/CDII when the desired function flashes.

c. Select the previous memorized preset number by turning MULTI JOG on the front panel and press SET/CDII.
'ON TIME' indicator appears for about 0.5 seconds in the display window and then disappears.

2. When you select CD, USB or TAPE function,
'ON TIME' indicator appears for about 0.5 seconds in the display window and then disappears.

5 **Set the hour to switch on by turning MULTI JOG on the front panel.**

6 **Press SET/CDII to confirm the turn on hour time.**

7 **Set the minute to switch on by turning MULTI JOG on the front panel.**

8 **Press SET/CDII to confirm the turn on minutes time.**
'OFF TIME' indicator appears for about 0.5 seconds in the display window and then disappears.

9 **Set the hour to switch off by turning MULTI JOG on the front panel.**

10 **Press SET/CDII.**

11 **Set the minute to switch off by turning MULTI JOG on the front panel.**

12 **Press SET/CDII.**

13 **Adjust the volume level by turning MULTI JOG on the front panel.**

14 **Press SET/CDII.**
"⏲" appears in the display window and the timer setting has been completed.

15 **Turn the system off.**
The selected timer functions are automatically switched on and off at the preset times.

To cancel or check the timer

Each time the **TIMER** button is pressed you can select the timer set or cancel. You can also check the timer setting status.
To activate or check the timer, press the **TIMER** button repeatedly so that "⏲" appears in the display window.
To cancel the TIMER, press the **TIMER** button repeatedly so that "⏲" disappears from the display window.

Audio Adjustment

EQUALIZER Effect

You can choose 7 fixed sound impressions and adjust the BASS, MIDDLE and TREBLE.

- You can select a desired sound mode by using **EQ master** button on the front panel (or **EQ master** on the remote control).
  When you want to change a sound mode press the **EQ master** button repeatedly within 3 seconds.

  Each time you press the button the setting changes in the display window as shown below.

  NORMAL → USER EQ → POP → CLASSIC
  ↑ ↓
  JAZZ ← DRAMA ← ROCK

- You can set the BASS, MIDDLE and TREBLE on the USER EQ mode.
  1. Select the USER EQ mode by using **EQ master** button.
     "USER EQ" will be displayed in the display window.
  2. Press the SET/CD▮▮ button on the front panel when "USER EQ" is displayed in the display window.
     "BASS 0" will be displayed in the display window.
  3. Select the BASS, MIDDLE or TREBLE you want by pressing the **PRESET UP/DOWN** buttons on the front panel.
  4. Turn the **MULTI JOG** KNOB on the front panel to set the sound level you want. (MIN, -4 ~ +4, MAX steps)
  5. Repeat the 3-4 steps as above.
  6. When the sound level is completed, press the the SET/CD▮▮ button on the front panel.

DEMO

Press **DEMO** in power off state to demonstrate the function in the display window.
To cancel, press **POWER (⏻ STANDBY/ON)** or **DEMO** again.

XDSS plus (Extreme Dynamic Sound System)

You can improve the sound quality during playback.
Press **XDSS plus** repeatedly on the remote control.

AUDIO CD NORMAL ⟷ XDSS ON

MP3/WMA NORMAL → XDSS ON → MP3 - OPT ON

MUTE

Press **MUTE** to mute your unit.
You can mute your unit in order, for example, to answer the telephone, "MUTE" indicator blinks in the display window.

XTS Pro

The unique sound quality of the LG Technology creates the optimum sound for you to play the prefect playback of the original sound and to feel the living sound source.

Each time you press XTS Pro the setting changes in the following order.

XTS-PRO ON → XTS-PRO OFF

Note
The XTS Pro function will not be operated when an earphone has connected.

DIMMER

This function dims the LED (Light-emitting diode) of front panel by half in power-on status.

Press **DIMMER** once. The LED (Light-emitting diode) of front panel is turned off. (Only LM -U1560/U1060) and the display window will be darken by half. To cancel, press the button again.

DISPLAY MODE

Whenever you press **DISPLAY MODE (DISP. MODE)**, you can enjoy the spectrum change with 6 types in the display window.

RDS Function - OPTIONAL

About RDS

This unit is equipped with RDS (Radio Data System), which brings a wide range of information from FM radio. RDS is a system for transmitting station call signs or network information, a description of station programme type text message about the station or specifics of musical selection and the correct time.

RDS Tuning

When a FM station containing RDS data is tuned in, the unit will automatically display the station's call sign and the RDS indicator will light in the Display Window as well as indicators for the programme type recognition (PTY), Radio Text (RT), Clock Time (CT) and RDS services programme (PS) if transmitted by the station.

RDS Display Options

The RDS system is capable of transmitting a wide variety of information in addition to the initial call sign that appears when a station is first tuned. In normal RDS operation the display will indicate the station name, broadcast network or call letters. Pressing **RDS** on the front panel enables you to cycle through the various data types in the sequence:

(FREQUENCY →PTY → RT → CT → PS)

- **PTY (Programme type recognition)-** The programme type is shown on the display window.
- **RT (Radio text recognition)-** The radio station's name is displayed on the display window.
- **CT (Time controlled by the channel)-** Enable the unit to receive the actual time and show it on the display window.
- **PS (Programme Service name)-** The programme title is displayed on the display window.

Note

Some RDS stations may not choose to include some of these additional features. If the data required for the selected mode is not being transmitted, the Display Window will show a **PTY NONE, RT NONE, CT NONE, PS NONE** message.

Programme Search (PTY)

A major benefit of RDS is its ability to encode broadcasts with Programme Type (PTY) codes that indicate the type of material being broadcast. The following list shows the abbreviations used to indicate each PTY along with an explanation of the PTY.

NEWS	News
AFFAIRS	Current Affairs
INFO	Information
SPORT	Sports
EDUCATE	Educational
DRAMA	Drama
CULTURE	Culture
SCIENCE	Science
VARIED	Varied Speech Programme
POP M	Popular Music
ROCK M	Rock Music
EASY M	Easy Listening Music
LIGHT M	Classical Music
CLASSICS	Serious Classical Music
OTHER M	Other Music
WEATHER	Weather Information
FINANCE	Financial Programmes
CHILDREN	Children's Programmes
SOCIAL	Social Affairs Programmes
RELIGION	Religious Broadcasts
PHONE IN	Phone-In Programmes
TRAVEL	Travel and Touring
LEISURE	Leisure and Hobby
JAZZ	Jazz Music
COUNTRY	Country Music
NATION M	National Music
OLDIES	Oldies Music
FOLK M	Folk Music
DOCUMENT	Documentary Programmes
TEST	Station Alarm Test Message
ALARM 1	Emergency Broadcast Information

You may search for a specific Programme Type (PTY) by following these steps:

1. **Press TUNER (or FUNCTION) to select FM mode.**
2. **Press the RDS to select PTY mode.**
3. **Select a desired station by pressing TUNING UP/ DOWN buttons.**
   When the RDS transmission is received, the display shows the program service name (PS) after RDS indicator appears.
4. **To search for a different PTY, press the PRESET UP/DOWN buttons while the last PTY in use is still displayed to scroll through the list of available PTY types.**
5. **When the PTY is selected, pressing TUNING UP/ DOWN buttons within 5 seconds.**
   The unit will go into an automatic search mode and attempt to find the next station with acceptable signal strength that matches the desired PTY type.

Operation with RADIO

Presetting the radio stations

You can preset 50 stations for FM and AM. Before tuning, make sure that you have turned down the volume to the minimum.

1 **Press FUNCTION on the remote control to show either FM or AM in the display window. Or Press TUNER on the front panel.**
Every time you press this button, AM and FM changes alternately.

2 **Select a station you want by turning MULTI JOG on the front panel or ⏮◀◀/▶▶⏭ on the remote control.**

Notes

- **Automatic Tuning**
  Press **TUNING UP/DOWN** on the front panel (or ⏮◀◀/▶▶⏭ on the remote control) for more than 0.5 second.
  - Scanning stops when the unit tunes in a station.
- **Manual Tuning**
  Turn **MULTI JOG** on the front panel (or ⏮◀◀/▶▶⏭ on the remote control) briefly and repeatedly.

3 **Press PROG.MEMO on the front panel . (or PROGRAM/MEMO on the remote control)**
A preset number will flash in the display window.

4 **Press PRESET UP/DOWN on the front panel buttons (or PRESET/FOLDER (∨/∧) on the remote control) to select the preset number you want.**

5 **Press PROG.MEMO on the front panel again.**
The station is stored.

6 **Repeat steps 1(or 2) to 5 to store other stations.**

To clear all the memorized stations

Press and hold **PROG.MEMO** on the front panel for about two seconds, **"CLEAR"** appears on the display window and then press **STOP/CLEAR (■)**, the stations are cleared.

For your reference

If all stations have already been entered, FULL message will appear in the display window for a moment and then a preset number will blink. To change the preset number, follow the steps 4-5.

To recall presets

Press and hold **PRESET UP/DOWN buttons on the front panel** (or **PRESET/FOLDER (∨/∧)** on the remote control) until the desired preset number appears or press it repeatedly.

Listening to the radio

1 **Press FUNCTION on the remote control to show either FM or AM in the display window. Or Press TUNER on the front panel.**
The last received station is tuned in.

2 **Press PRESET UP/DOWN buttons (or PRESET/FOLDER (∨/∧) on the remote control) repeatedly to select the preset station you want.**
- Each time you press the button, the unit tunes in one preset station at a time.

3 **Adjust the volume by rotating VOLUME CONTROL KNOB (or pressing VOLUME (∨/∧) on the remote control) repeatedly.**

To listen to non-preset radio stations

- For manual tuning, see "Manual Tuning".
- For automatic tuning, see "Automatic Tuning".

To select a preset radio station directly

You can use the number buttons on the remote control to select a preset radio station directly.
For example, to listen to preset station 4, press 4 on the remote control. To listen to preset station 19, press 1 and then 9 (within 3 seconds)

To turn the radio off

Press POWER to turn off the unit or select another function mode (CD,TAPE, AUX or USB).

For your reference

- **If an FM program is noisy**
  Press **ST./MONO** so that "**MONO**" disappears on the display window. There will be no stereo effect, but the reception will be improved. Press **ST./MONO** again to restore the stereo effect.
- **To improve reception**
  Repose the supplied antennas.

Operation with TAPE

Basic Playback

1 **Press TAPE1-2 (or TAPE) to select tape function.**
("*NO TAPE*" appears in the display window.)

2 **Open cassette TAPE1-2 by pushing to the ⏏PUSH EJECT position.**

3 **Insert one or two cassettes with the tape side to the bottom and then close the TAPE 1 (and/or 2) door.**

4 **Press ▶ (or ◀: OPTIONAL).**

AUTO STOP DECK (TAPE 1)
After auto stop deck plays front side of cassette, the unit stops automatically.

AUTO REVERSE DECK (TAPE 2)
You can select direction of the cassette you want by pressing PLAY MODE.

Pressing	Display	Function
-	⇄	After the cassette of TAPE 1 or 2 plays front or reverse (backward play) side, stops automatically.
Once	⇄)	After the cassette of TAPE 1 or 2 plays front and reverse side, stops automatically.
Twice	(⇄)	After the cassette of TAPE 1 or 2 plays six times repeatedly front and reverse side, stops automatically.

To Stop Play

Press STOP/CLEAR(■) on the front panel or TAPE STOP(■) on the remote control during playback.

To Play Rewind or Fast Forward

After press ◀◀/▶▶ on the front panel or ◀◀/▶▶ on the remote control during playback, press ▶(or ◀) at the tape position you want.

Dubbing

This function shows how to record from tape to tape.

1 **Press TAPE1-2 (or TAPE).**
- Cassette TAPE 1- Insert the playback tape to dub.fr
- Cassette TAPE 2- Insert a blank tape to copy on.

2 **Press (NOR.DUBB./HI-DUBB.).**
- NORMAL DUBBING - Normal speed copying
- HIGH DUBBING - Double speed copying

To stop recording, press STOP/CLEAR(■).

Recording

Basic Setting

1 **Select a function you want to record except tape function.**

2 **Open the cassette deck TAPE 2 and insert a blank cassette into the cassette compartment.**
Set the recording direction.
Press PLAY MODE repeatedly to set the recording direction.

Recording from Radio, CD or Auxiliary source

1 **Press REC/PAUSE(●\II)(on the front panel or ●/II on the remote control).**
"REC" flashes and holds the cassette in pause mode.

2 **Press ▶ (or ◀).**
The recording begins.

To pause the recording
Press **●/II** or **REC/PAUSE(●\II)**

To Stop the recording
Press STOP/CLEAR(■).

CD to Tape Synchronized Recording

The CD synchro recording function dubs a complete CD and programmed titles automatically into a cassette.

1 **Press CD SYNC. in stop mode.**
"REC" flashes and "CD SYNC" displays in the display window.

2 **The synchronized recording is started automatically after about 7 seconds.**

Notes
- If you wish to record from the desired track, select the desired track with MULTI JOG (or **I◀◀ ◀◀/▶▶ ▶▶I** on the remote control) before commencing CD synchro recording.
- A function change is not possible during recording.

CD Playback

Basic Playback

1 **Press ⏻ STANDBY/ON to turn on the unit.**

2 **Press the CD button on the front panel to enter the CD mode.**
If no disc is entered in the disc tray, the "NO DISC" is displayed.

3 **Press CD OPEN/CLOSE (⏏ OPEN/CLOSE) and place the disc into the disc tray.**
The disc on the left (DISC 1) is played first.



Note
To load an 8cm(3 inch) disc, put it onto the inner circle of the tray.

4 **Press CD OPEN/CLOSE (⏏ OPEN/CLOSE) to close the disc compartment.**
Audio CD: "READING" appears in the display window, and then the total number of tracks and the playing time are displayed.
MP3 CD: "READING" appears in the display window, and then the total number of files is displayed.

5 **Press PLAY (▶) on the front panel or CD PLAY/ PAUSE (▶/❚❚) on the remote control.**
In addition, you can also play an Audio CD or MP3 CD using the NUMBER buttons.

To Pause Play

Press CD PAUSE (SET/CD❚❚) on the front panel or CD PLAY/ PAUSE (▶/❚❚) on the remote control during playback.

Press this button again it to resume play.

To Stop Play

Press STOP/CLEAR(■) on the front panel or CD STOP(■) on the remote control during playback.

To Skip a Track

- **Turn the MULTI JOG on the front panel to select you want track.**
- **Press ▶▶ ▶▶❙ button on the remote control to go to the next track.**
- **When the ❙◀◀◀◀ button on the remote control is pressed once midway through a track, the player returns to the start of that track. And then if you want go to the preceding track, press the button once more.**

To Search a Track

Press the ◀◀ / ▶▶ buttons on the front panel, and then press once more at the point you want.
(or hold the ❙◀◀◀◀ / ▶▶ ▶▶❙ buttons on the remote control during playback, then release at the point you want.)

Note
This function is not available to play a MP3/WMA file.

To Go to the next discs

Press DISC SKIP on the front panel or D.SKIP on the remote control during playing or stopping.

To Select a disc directly

Press DISC 1, DISC 2 or DISC 3 during playing or stopping.
When you press **DISC 1-3** before playing a disc, the unit will automatically start playing the selected disc.

To Replace discs during Playback

You can open the disc tray during playing a disc to check what discs are to be played next and replace discs without interrupting playback of the current disc.

1 **Press the CD OPEN/CLOSE (⏏ OPEN/CLOSE).**
The disc tray is opened. Two disc compartments appear. Even if the unit is playing a disc, it doesn't stop playing.

2 **Replace discs in the compartments with new ones.**
The unit plays the disc in the left compartment after the current disc, and then the one in the right compartment.

3 **Press CD OPEN/CLOSE (⏏ OPEN/CLOSE).**
The CD door is closed.

Notes
- Do not place more than one compact disc on one disc tray at the same time.
- Do not push the disc tray to close CD door, as you may damage the unit.

To check MP3 file information

Press the INFO button during MP3 file playback.
- The information (Title, Artist or Album) of the MP3 file will be shown in the display window.
- If there is no the information of the MP3 file, "NO ID3 TAG" indicator will be shown in the display window.

Notes
- This unit can play a CD-R or CD-RW that contains audio titles or MP3 files.
- The MP3 file name and ID3 TAG should be named using English.

CD Playback

To Play tracks in random order

Press the RANDOM button the remote control during playback.
The tracks on the CD will all play in random order.

EX) " RANDOM 5 00:20 " will be shown in the display window.

- Playing time indicator
- Track number indicator
- RANDOM indicator

To cancel random playback
Press the RANDOM button again to return to normal CD playback.

To Repeat Play

To play one track repeatedly

Press **REPEAT** on the remote control once during playback.

- "↻ 1" appears on the display window.

To play one folder repeatedly (only MP3 /WMA DISC)

Press **REPEAT** once during playback

"↻ ALL " appears on the display window.

To play one disc repeatedly

Press **REPEAT** again during playback.

- "↻ 1 DISC" appears on the display window.

To play all tracks on all discs repeatedly

Press **REPEAT** once more during playback.

- "↻ ALL DISC" appears on the display window.

To cancel repeat play

- Press **REPEAT** several times until repeat indicator disappears.

Program repeat play

- Press **REPEAT** once during program play.
  - "↻ 1" appears on the display window. (One track repeat)
- Press **REPEAT** again during program play.
  - "↻ ALL DISC" appears on the display window. (All program repeat)

MP3 file disc folder function

Press the **PRESET/FOLDER** (∨/∧) buttons on the remote control to select you want a folder.

Note
It is applied in a case that has several folder in MP3 DISC.

To Program Play

You can arrange the order of the tracks on the discs and create your own program. The program can contain up to 20 tracks.

1 **Press PROG.MEMO on the front panel or PROGRAM/MEMO on the remote control in the stop mode.**

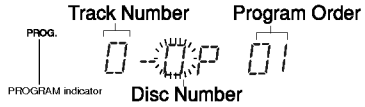

2 **Press DISC SKIP or DISC DIRECT PLAY (DISC1/2/3) on the front panel or D.SKIP on the remote control to select the disc.**

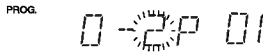

3 **Press CD SKIP/ SEARCH MULTI JOG on the front panel (or ⏮◀◀/▶▶ ⏭ on the remote control) to select the track.**

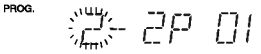

4 **Press PROG.MEMO on the front panel or PROGRAM/MEMO on the remote control.**

5 **Repeat steps 1- 4.**

6 **Press PLAY(▶) on the front panel or CD PLAY/ PAUSE (▶/❚❚) on the remote control.**

To check program contents

Press **PROG.MEMO** (or **PROGRAM/MEMO** on the remote control) in the stop mode.

- The disc, track and program number will be displayed.

To clear program contents

Press **PROG.MEMO** (or **PROGRAM/MEMO** on the remote control) on the stop mode. And then press **STOP/CLEAR(■)** on the front panel or **CD STOP(■)** on the remote control.

To add program contents

1. Press **PROG.MEMO** (or **PROGRAM/MEMO** on the remote control) repeatedly in the program stop mode until "Disc Number" blinks.
2. Repeat steps 2-4.

To modify program contents

1. Press the **PROG.MEMO** (or **PROGRAM/MEMO** on the remote control) to display program number you want to modify.
2. Repeat steps 2-4.

USB FUNCTION

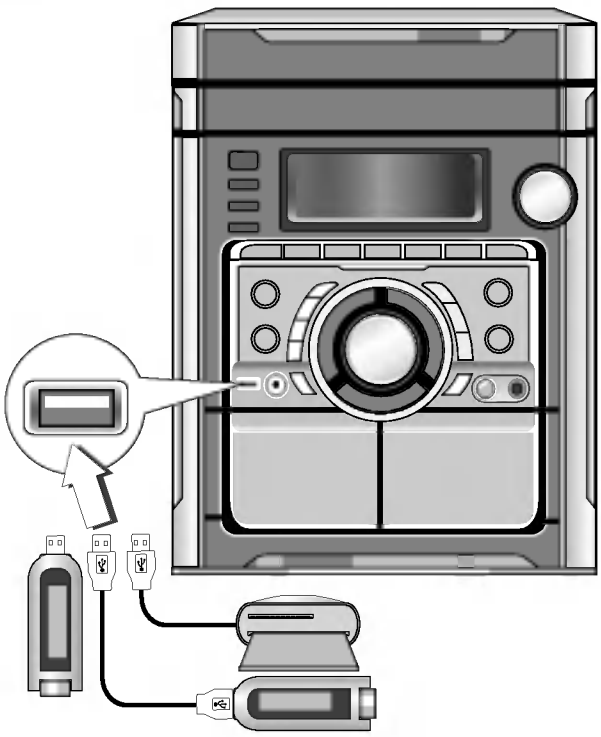

Notes

- Don't remove a MP3 player or memory card while playing the USB.
- Don't add or remove the memory card when playing the USB by using a multi card reader.
- Numbers of file available are maximum 999 EA.
- Be sure to save file in the memory card after formatting.
- No cladding hard disc is supported.
- The MP3 player requiring installation of a drive is not supported.
- This unit can play USB device that contains MP3/WMA files.
- The MP3 file name and ID3 TAG should be named using English.
- This player can not format memory card.
- This player can not use USB HUB.
- Recommended Memory Card
- This unit may not be available for some USB device.

  Compact Flash Card (CFC), Micro Drive (MD), Smart Media Card (SMC), Memory Stick (MS), Secure Digital Card (SD), Multi Media Card (MMC), Memory Stick Pro (MS-Pro)
  - Compatible with : FAT12,16,32
  - Only use the memory cards recommended.

Basic Playback

1. **Plug the USB device into the USB connector of your unit.**
2. **Press the USB button to enter the USB mode.**
   "CHECKING" appears in the display window, and then the total number of files is displayed.
3. **Press PLAY (▶) on the front panel or PLAY/PAUSE (▶/❚❚) on the remote control.**
   In addition, you can also play using the NUMBER buttons.

To Remove the USB from the unit

1. Choose the other functions except USB function in order to remove the USB.
2. Remove the USB from the unit.

Notes

- Do not remove the USB during the playback.
- A Back up is demands to prevent a data damage.
- Besides Basic Playback,If you want to operate other functions, see the CD Playback section.

Moving to other cards

When you use a MP3 player or memory card, Press **D.SKIP** on the remote control during playing or stopping.

Troubleshooting

Check the following guide for the possible cause of a problem before contacting service.

Symptom	Cause	Correction
No power.	• The power cord is disconnected.	• Plug the power cord into the wall outlet securely.
No sound.	• The audio cables are not connected securely.	• Connect the audio cable into the jacks securely.
	• The power of the external source equipment is switched off.	• Turn on the equipment connected with the audio cable.
	• The speaker cable is set to the wrong position.	• Set the speaker cable to the correct position, then turn on the unit again by pressing POWER.
The unit does not start playback.	• No disc or tape is inserted.	• Insert a disc disc or tape.
	• An unplayable disc or tape is inserted.	• Insert a playable disc or tape.
	• The disc is placed upside down.	• Place the disc with the playback side down.
	• The disc is not placed within the guide.	• Place the disc on the disc tray correctly inside the guide.
	• The disc is dirty.	• Clean the disc.
The remote control does not work properly.	• The remote control is not pointed at the remote sensor of the unit.	• Point the remote control at the remote sensor of the unit.
	• The remote control is too far from the unit.	• Operate the remote control within about 23 ft (7 m).
	• There is an obstacle in the path of the remote control and the unit.	• Remove the obstacle.
	• The batteries in the remote control are exhausted.	• Replace the batteries with new ones.

Additional Information

About MP3

- An MP3 file is audio data compressed by using the MPEG1 audio layer-3 file-coding scheme. We call files that have the ".mp3" file extension "MP3 files".
- The unit can not read an MP3 file that has not ".mp3" file extension.

About WMA

- An WMA file is a Microsoft audio compression technology.
- WMA(Windows Media Audio) offers double the audio compression of the MP3 format.

MP3/WMA Disc compatibility with this unit is limited as follows:

1. Sampling Frequency / 8 - 48kHz(MP3), 32 - 48kHz(WMA)
2. Bit rate / 8 - 320kbps(MP3),48-320kbps(WMA)
3. CD-R physical format should be "ISO 9660"
4. If you record MP3/WMA files using the software which cannot create a FILE SYSTEM, for example "Direct-CD" etc., it is impossible to playback MP3 files. We recommend that you use "Easy-CD Creator", which creates an ISO9660 file system.
5. File names should be named using 30 letters or less and must incorporate ".mp3" ".wma" extension e.g. "********.MP3"or "********.WMA".
6. Do not use special letters such as "/ : * ? " < > " etc.
7. Even if the total number of files on the disc have more than 1000, it will only be shown up to 999.

About MULTI SESSION

- This function recognizes the multi session disc according to a disc of CD-ROM type.
  ex) If there are MP3/WMA files in the first session, the MP3/WMA file in the first session is only played.
  If there are only MP3/WMA files in the whole session, all of the MP3/WMA files in the session are played.
  If there is Audio CD in the first session, only the Audio CD in the first session is played.

Specifications

SECTION \ MODEL		LM-U1560+LMS-U1560W (SUB WOOFER)	LM-U1060	LM-U560	LM-U360
[General]	Power supply	Refer to the back panel of the unit.			
	Power consumption	Refer to the back panel of the unit.			
	Net Weight	6.2 kg			
	External dimensions (W x H x D)	273 x 321x 359 mm			
[CD]	Frequency response	40 - 20000 Hz			
	Signal-to-noise ratio	75 dB			
	Dynamic range	75 dB			
[Tuner] FM	Tuning Range	87.5 - 108.0 MHz			
	Intermediate Frequency	10.7 MHz			
	Signal to Noise Ratio	60/55 dB			
	Frequency Response	50 - 10000 Hz			
[Tuner] AM (MW)	Tuning Range	522 - 1620 kHz or 520 - 1720 kHz			
	Intermediate Frequency	450 kHz			
	Signal to Noise Ratio	30 dB			
	Frequency Response	140 - 1800 Hz			
[Amp]	Output Power	100W +100W +150W	100W+100W	50W +50W	30W + 30W
	T.H.D	0.5%			
	Frequency Response	40 - 20000 Hz			
	Signal-to-noise ratio	75 dB			
[TAPE]	Tape Speed	4.75cm/sec			
	Wow Flutter	0.25% (MTT -111, JIS-WTD)			
	F.F/REW Time	120sec (C-60)			
	Frequency Response	250 - 8000Hz			
	Signal to Noise Ratio	43dB			
	Channel Separation	50dB(P/B)/45dB(R/P)			
	Erase Ratio	55dB (MTT-5513)			

SECTION \ MODEL		LMS-U1560 LMS-U1060	LMS-U1560W (SUB WOOFER)	LMS-U560	LMS-U360
[Speakers]	Type	2way 2speaker	1way 1speaker	2way 2speaker	2way 2speaker
	Impedance	4Ω	3Ω	4Ω	4Ω
	Frequency Response	50-20000Hz	50-1500Hz	55-20000Hz	55-20000Hz
	Sound Pressure Level	85dB/W (1m)	84dB/W (1m)	86dB/W (1m)	86dB/W (1m)
	Rated Input Power	100W	150W	50W	30W
	Max. Input Power	200W	300W	100W	60W
	Net Dimensions (W x H x D)	229X224X286mm	273x325x384mm	229X224X286mm	229X224X286mm
	Net Weight	3.8kg	6kg	3.9kg	3.8kg

✻ Designs and specifications are subject to change without notice.



P/NO : 3834RH0146F