BOTTOM FREEZER REFRIGERATOR

User's Guide

Please read this guide thoroughly before operating and keep it handy for reference at all times.

P/No. 3828JL8097J

TABLE OF CONTENTS

English Version 2

French Version 36

Spanish Version 70

Safety Instructions 3–4

Important Safety Instructions 4

Parts And Features 5

Refrigerator Installation 6–13

- Unpacking Your Refrigerator 6
- Installation 6
- Removing And Replacing Your Refrigerator Handles And Doors 7–12
- Leveling And Door Alignment 13
- Base Cover 13

Using Your Refrigerator 14–24

- Setting The Controls 14
- Ensuring Proper Air Circulation 14
- Diagnosis (Failure Detection) Function 15
- How To Use A New Door Ice Bucket 16
- Adjusting Control Settings 17
- Food Storage Guide 17
- Storing Frozen Food 18
- ▶ **Refrigerator Section**
- Water Dispenser 18
- Refrigerator Shelves 19
- Bottle Holder (Optional) 19
- Snack Pan 20
- Optibin Crisper 20
- Crisper Humidity Control 20
- Removing Crisper 20
- Crisper Cover With Lattice On Inner Surface 21
- Dairy Bin (Optional) 21
- Modular Door Bin 22
- Egg Box (Optional) 22
- ▶ **Freezer Section**
- Tilting Door 22
- Tilt-Out Door Basket (Optional) 22
- Ice Bin 22
- Durabase 23
- Durabase Divider 23
- Pull Out Drawer 23
- Filter 24

Care And Cleaning 25–26

- General Cleaning Tips 25
- Outside 25
- Inside Walls 25
- Door Liner And Gaskets 25
- Plastic Parts 25
- Condenser Coils 25
- Light Bulb Replacement 25–26
- Power Interruptions 26
- When You Go On Vacation 26
- When You Move 26

About The Automatic Icemaker 27

Connecting The Water Line 28–30

Troubleshooting Guide 31–34

IMPORTANT SAFETY INSTRUCTIONS

This guide contains many important safety messages. Always read and obey all safety messages.

This is the safety alert symbol. It alerts you to safety messages that inform you of hazards that can kill or hurt you or others, or cause damage to the product.

All safety messages will be preceded by the safety alert symbol and the hazard signal word DANGER, WARNING, CAUTION. These words mean:

⚠ DANGER — You **will** be killed or seriously injured if you don't follow instructions.

⚠ WARNING — You **can** be killed or seriously injured if you don't follow instructions.

⚠ CAUTION — Indicates an imminently hazardous situation which, if not avoided, **may** result in minor or moderate injury, or product damage only.

All safety messages will identify the hazard, tell you how to reduce the chance of injury and tell you what can happen if the instructions are not followed.

⚠ WARNING

To reduce the risk of fire, electric shock, or injury to persons when using your product, basic safety precautions should be followed, including the following:

Read all instructions before using this appliance.

- NEVER unplug your refrigerator by pulling on the power cord. Always grip the plug firmly and pull it straight out from the outlet.
- Repair or replace immediately all electric service cords that have become frayed or otherwise damaged. Do not use a cord that shows cracks or abrasion damage along its length or at either the plug or connector end.
- When moving your refrigerator away from the wall, be careful not to roll over or damage the power cord.
- DO NOT store or use gasoline or other flammable vapors and liquids in the vicinity of this or any other appliance.
- DO NOT allow children to climb, stand or hang on the refrigerator doors or shelves in the refrigerator. They could damage the refrigerator and seriously injure themselves.
- Keep fingers out of *pinch point* areas; clearances between the doors and cabinet are necessarily small. Be careful closing doors when children are in the area.
- Unplug your refrigerator before cleaning or making any repairs.

  NOTE: We strongly recommend that any servicing be performed by a qualified individual.
- Before replacing a burned-out light bulb, **unplug** the refrigerator or turn off power at the circuit breaker or fuse box in order to avoid contact with a live wire filament. (A burned-out light bulb may break when being replaced.)

  NOTE: Setting either or both controls to the OFF position does not remove power to the light circuit.
- This refrigerator must be properly installed in accordance with the **Attention Installer Instructions** that were taped to the front of the refrigerator.
- After your refrigerator is in operation, do not touch the cold surfaces in the freezer compartment when hands are damp or wet. Skin may adhere to the extremely cold surfaces.
- In refrigerators with automatic icemakers, avoid contact with the moving parts of the ejector mechanism, or with the heating element that releases the cubes. DO NOT place fingers or hands on the automatic icemaking mechanism while the refrigerator is plugged in.
- DO NOT refreeze frozen foods which have thawed completely. The United States Department of Agriculture in Home and Garden Bulletin No. 69 says:

  ...You may safely refreeze frozen foods that have thawed if they still contain ice crystals or if they are still cold—below 4°C.

  ...Thawed ground meats, poultry or fish that have any off-odor or off-color should not be refrozen and should not be eaten. Thawed ice cream should be discarded. If the odor or color of any food is poor or questionable, get rid of it. The food may be dangerous to eat.

  Even partial thawing and refreezing reduces the eating quality of foods, particularly fruits, vegetables and prepared foods. The eating quality of red meats is affected less than that of many other foods. Use refrozen foods as soon as possible to save as much of their quality as you can.
- **Do not modify or extend the Power Cord length.** It will cause electric shock or fire.

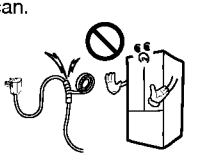

SAVE THESE INSTRUCTIONS

⚠ DANGER: RISK OF CHILD ENTRAPMENT

Child entrapment and suffocation are not problems of the past. Junked or abandoned refrigerators are still dangerous...even if they will sit for *just a few days*. If you are getting rid of your old refrigerator, please follow the instructions at right to help prevent accidents.

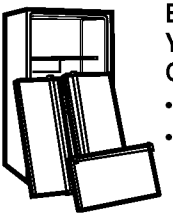

BEFORE YOU THROW AWAY YOUR OLD REFRIGERATOR OR FREEZER

- Take off the doors.
- Leave the shelves in place so that children may not easily climb inside.

CFC DISPOSAL

Your old refrigerator may have a cooling system that used CFCs (chlorofluorocarbons). CFCs are believed to harm stratospheric ozone.

If you are throwing away your old refrigerator, make sure the CFC refrigerant is removed for proper disposal by a qualified servicer. If you intentionally release this CFC refrigerant, you can be subject to fines and imprisonment under provisions of environmental legislation.

IMPORTANT SAFETY INSTRUCTIONS

Don't use an extension cord

If possible, connect the refrigerator to its own individual electrical outlet to prevent it and other appliances or household lights from causing an overload that could cause a power outage.

Accessibility of Supply Plug

The refrigerator-freezer should be so positioned that the supply plug is accessible for quick disconnection when accident happens.

Supply Cord Replacement

If the supply cord is damaged, it must be replaced by the manufacturer or its service agent or a similarly qualified person in order to avoid a hazard.

FEED WATER PIPE INSTALLATION

Before installation

- Automatic ice maker can be installed only by manufacturer.
- Automatic ice maker operation needs water pressure of 147~834 kPa (1.5~8.5 kgf/cm^2) (That is, an instant paper cup (180 cc) will be fully filled within 3 sec.).
- If water pressure does not reach the rating 147 kPa (1.5 kgf/cm^2) or below, it is necessary to purchase a separate pressure pump for normal automatic icing and cool water feed.
- Keep the total length of the feed water pipe tube within 8 m and be careful for the tube not be bent. If the tube is 8 m or longer it may cause trouble in water feed owing to the drain water pressure.
- Install the feed water pipe tube at a place free from heat.

⚠ WARNING

- Connect to potable water supply only.
- Refer to instructions with water filter kit for installation.

⚠ WARNING

- The refrigerant and insulation blowing gas used in the appliance require special disposal procedures. When disposal, please consult with service agent or a similarly qualified person.

PARTS AND FEATURES

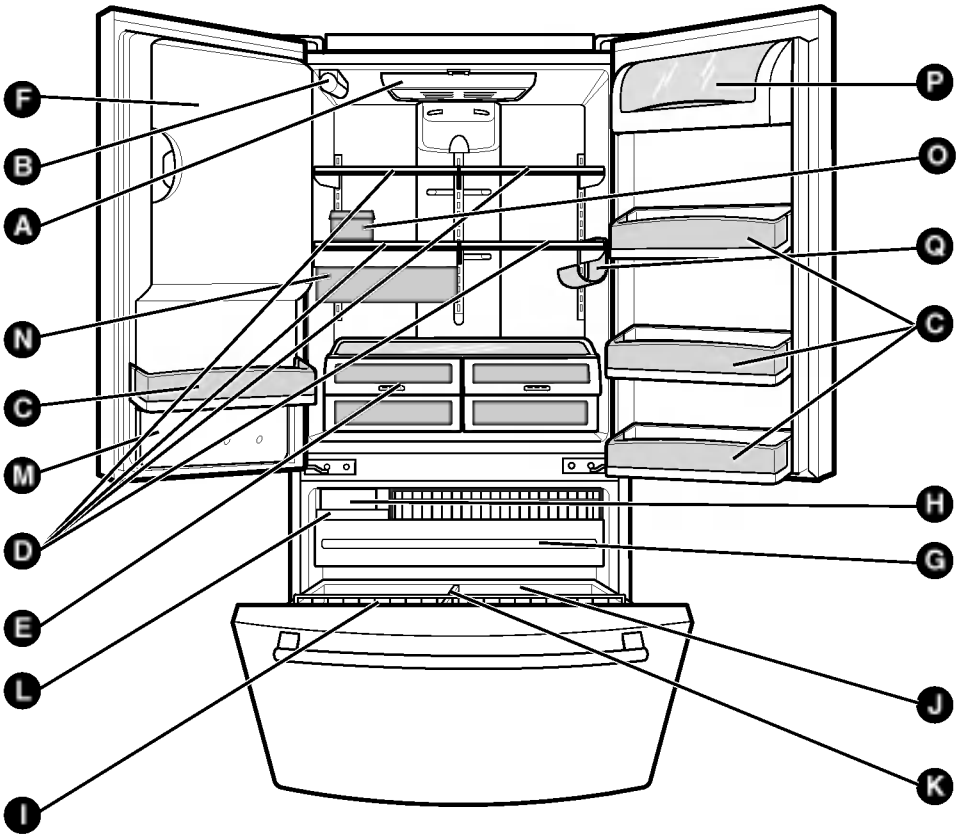

Use this page to become more familiar with the parts and features. Page references are included for your convenience.

NOTE: This guide covers several different models. The refrigerator you have purchased may have some or all of the items listed below. The locations of the features shown below may not match your model.

- A Refrigerator Light (p. 25)
- B Filter (Inside) (p. 24)
- C Modular Door Bins (p. 22)
- D Refrigerator Shelves (p. 19)
- E Optibin Crisper (p. 20) (Keeps fruits and vegetable fresh and crisper)
- F Ice Room (p. 16) (Ice Maker and Ice Bucket)
- G Pull out Drawer (p. 23)
- H Turbo Motor
- I Tilt-Out Door Basket (p. 22) (optional)
- J Durabase (p. 23)
- K Divider (p. 23)
- L Ice Bin (p. 22)
- M Water Tank Cover
- N Snack Pan (p. 20)
- O Egg Box (p. 22) (optional)
- P Dairy Bin (p. 21) (optional)
- Q Bottle Holder (p. 19) (optional)

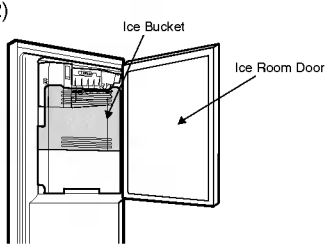

REFRIGERATOR INSTALLATION

⚠ WARNING

Excessive Weight Hazard

Use two or more people to move and install refrigerator.

Failure to do so can result in back or other injury.

UNPACKING YOUR REFRIGERATOR

Remove tape and any temporary labels from your refrigerator before using. Do not remove any warning-type labels, the model and serial number label, or the TechSheet that is attached to back wall of the refrigerator.

To remove any remaining tape or glue, rub the area briskly with your thumb. Tape or glue residue can also be easily removed by rubbing a small amount of liquid dish soap over the adhesive with your fingers. Wipe with warm water and dry.

Do not use sharp instruments, rubbing alcohol, flammable fluids or abrasive cleaners to remove tape or glue. These products can damage the surface of your refrigerator. For more information, see the **Important Safety Instructions** section.

Refrigerator shelves are installed in the shipping position.

Please reinstall shelves according to your individual storage needs.

⚠ WARNING

When Moving Your Refrigerator:

Your refrigerator is heavy. When moving the refrigerator for cleaning or service, be sure to protect the floor. Always pull the refrigerator straight out when moving it. Do not wiggle or walk the refrigerator when trying to move it, as floor damage could occur.

⚠ WARNING



Explosion Hazard

Keep flammable materials and vapors, such as gasoline, away from refrigerator.

Failure to do so can result in death, explosion or fire.

INSTALLATION

1. To avoid vibration, the unit must be level. If required, adjust the leveling screws to compensate for unevenness of the floor. The front should be slightly higher than the rear to aid in door closing. Leveling screws can be turned easily by tipping the cabinet slightly. Turn the leveling screws clockwise () to raise the unit, counterclockwise () to lower it.
2. Install this appliance in an area where the temperature is between 13°C and 43°C. If the temperature around the appliance is too low or high, cooling ability may be adversely affected.
3. Allow the clearance of at least 2 inch from the ceiling and 1 inch from the side walls for better cooling efficiency, ease of installation, proper air circulation and electrical connections.

⚠ **CAUTION:** Avoid placing the unit near heat sources, direct sunlight or moisture.

NEXT

1. Clean your refrigerator thoroughly and wipe off all dust accumulated during shipping.
2. Install accessories such as ice cube bin, drawers, shelves, etc., in their proper places. They are packed together to prevent possible damage during shipment.
3. Let your refrigerator run for at least 2 or 3 hours before putting food in it. Check the flow of cold air in the freezer compartment to ensure proper cooling. Your refrigerator is now ready for use.

⚠ WARNING

- Be careful when you work with hinge, base grille, stopper etc. You may be injured.
- Do not put hands or foot or metal sticks into air vents, base grille or bottom of refrigerator. You may be injured or receive an electrical shock.

HOW TO REMOVE DOOR HANDLES

To move refrigerator through a house door, it maybe necessary to remove the refrigerator door handles.

NOTE: Handle appearance may vary from illustrations on this page.

1. Removing Refrigerator Handle

- Grasp the handle tightly with both hands and slide the handle up (1)(this may require some force).
- The keyhole slots (2) on the back of the handle allow the handle to separate from the mounting screws (3).

⚠ **CAUTION:** The handle could be damaged if you hit it with a hammer while removing or attaching.

⚠ **CAUTION:** When you assemble or disassemble handle, you must push or pull with reasonable force.

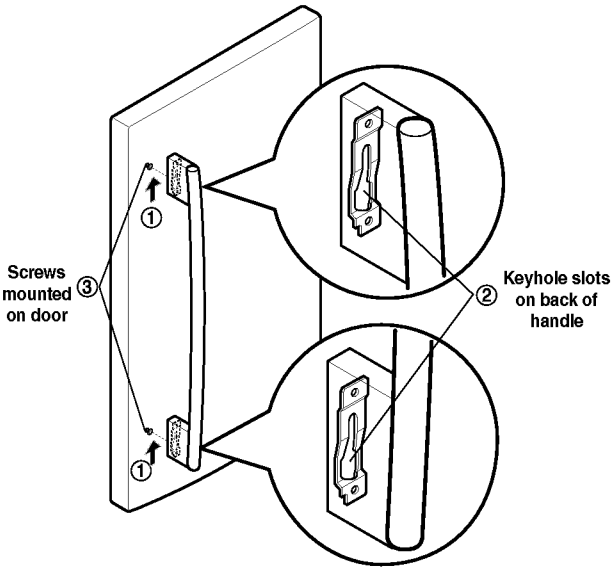

2. Removing Freezer Drawer Handle

- Press the handle against door first.
- Grasp the handle tightly with both hands and slide the handle to right (1)(this may require some force).
- The keyhole slots (2) on the back of the handle allow the handle to separate from the mounting screws (3).

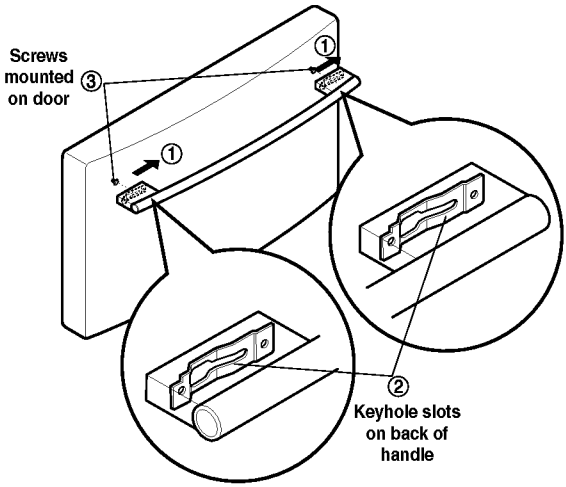

HOW TO REPLACE DOOR HANDLES

NOTE: Handle appearance may vary from illustrations on this page.

1. Replacing Refrigerator Door Handle

- Align keyhole slots (1) on the top and bottom of the back of the handle with the screws (2) mounted on the front of the door.
- Press the handle against the door front, making sure that the screws (2) go into the keyhole slots (1).
- Holding the handle with both hands, press it firmly against the front of the door and slide the handle down (3).

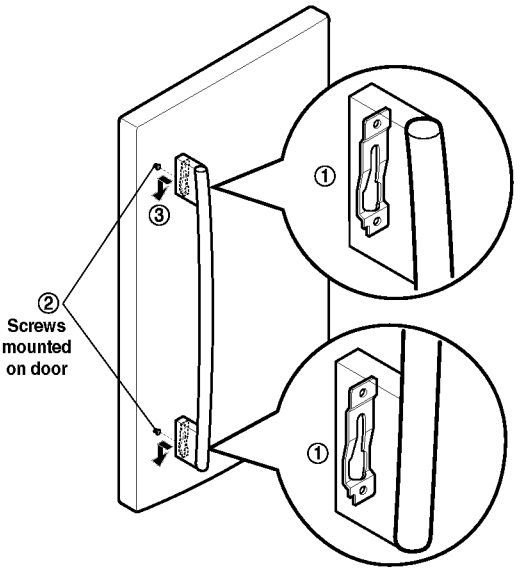

2. Reinstalling the Freezer Drawer Handle

- Align keyhole slots (4) on the right and left sides of the back of the handle with the screws (5) mounted on the front of the drawer.
- Press the handle against the drawer front, making sure that the screws (5) go into the keyhole slots (4).
- Holding the handle with both hands, press it firmly against the front of the drawer and slide the handle to the left (6).

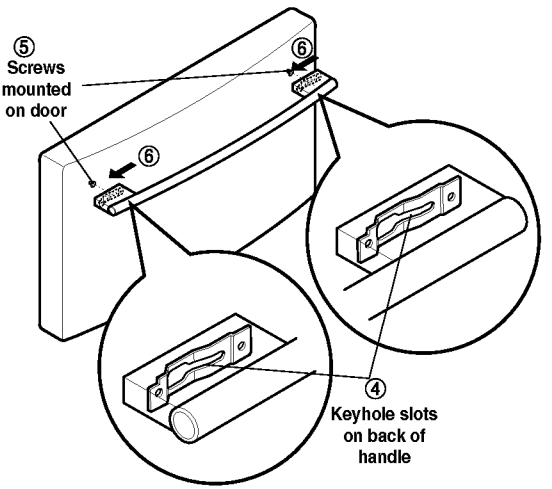

REMOVING AND REPLACING REFRIGERATOR DOORS

1. Removing Refrigerator Door

⚠ **CAUTION:** Before you begin, unplug the refrigerator. Remove food and bins from doors.

▶ **Left Door** - FIG.2

1. Disconnect water supply tube by pushing back on the disconnect ring (4). - FIG.1
2. Open door. Loosen top hinge cover screw (1).
   Use flat tip screwdriver to pry back hooks on front underside of cover (3). Lift up cover.
3. Disconnect door switch wire harness (2). Remove cover.
4. Pull out the tube.
5. Disconnect the three wire harnesses (5). Remove the grounding screw (6).
6. Rotate hinge lever (7) counterclockwise and remove. Lift top hinge (8) free of hinge lever latch (9).

⚠ **CAUTION:** When lifting hinge free of latch, be careful that door does not fall forward.

7. Lift door up from middle hinge pin and remove door.
8. Place door, inside facing up, down onto a non-scratching surface.

▶ **Right Door** - FIG.3

1. Open door. Loosen top hinge cover screw (1). Lift up cover (3).
2. Disconnect door switch wire harness (2). Remove cover.
3. Disconnect wire harness (5). Remove the grounding screw (6).
4. Rotate hinge lever (7) clockwise and remove. Lift top hinge (8) free of hinge lever latch (9).

⚠ **CAUTION:** When lifting hinge free of latch, be careful that door does not fall forward.

5. Lift door up from middle hinge pin (10) and remove door.
6. Place door, inside facing up, down onto a non-scratching surface.

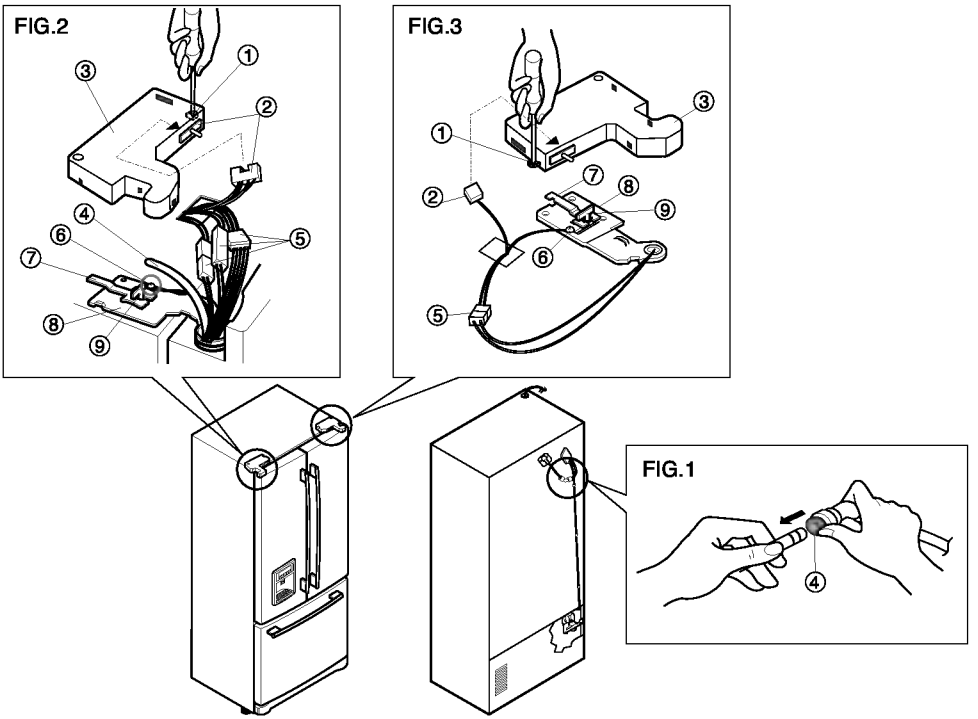

2. Reinsalling the Refrigerator Door

▶ Right Door

1. Lower the door onto middle hinge pin (10).
2. Fit top hinge (8) over hinge lever latch (9) and into place. Insert hinge lever (7) under lever latch. Rotate lever counterclockwise to secure hinge.
3. Install the grounding screw (6) and connect the three wire harnesses (5).
4. Connect door switch wire harness (2).
5. Hook tab on door switch side of cover under edge of wire opening in cabinet top. Position cover (3) into place. Insert and tighten cover screw (1).

▶ Left Door

1. Lower the door onto middle hinge pin (10).
2. Fit top hinge (8) over hinge lever latch (9) and into place. Insert hinge lever (7) under lever latch. Rotate lever clockwise to secure hinge.
3. Install the grounding screw (6) and connect the three wire harnesses (5).
4. Connect door switch wire harness (2).Push the water supply tube into the hall on the top case and pull it out on the backplate.
5. Insert the water supply tube (4) into the connector tube until you see only one scale mark. (Fully insert the tube over 5/8"(15mm)).
6. Hook tab on door switch side of cover (3) under edge of wire opening in cabinet top. Position cover into place. Insert and tighten cover screw (1).

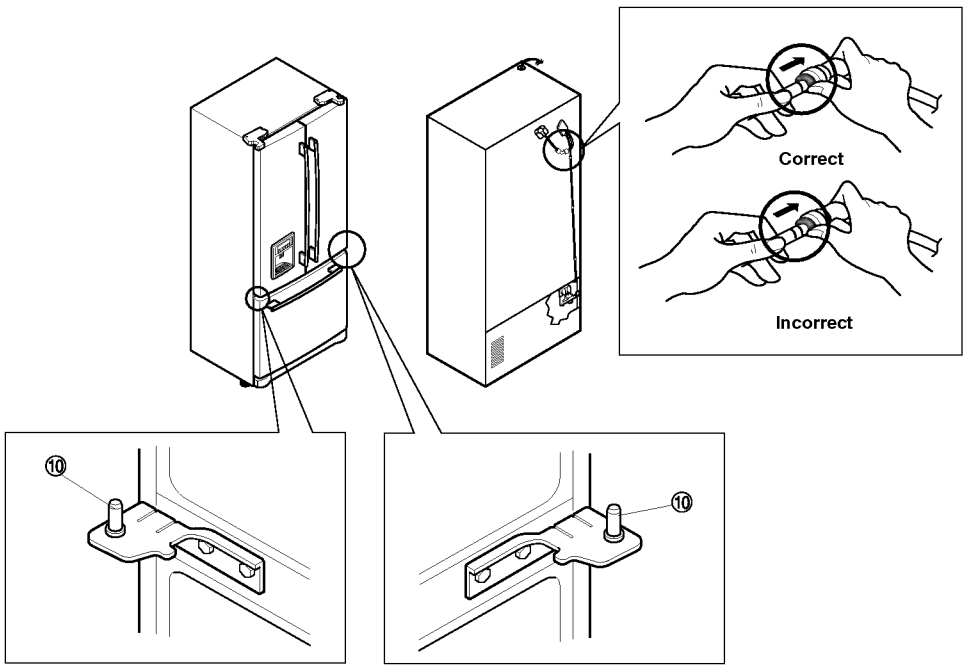

HOW TO REMOVE AND INSTALL THE PULLOUT DRAWER

IMPORTANT: To avoid possible injury or product or property damage, you will need two people to perform the following instructions.

1. Removing Pullout Drawer

- Pull the drawer open to full extension. Remove the lower basket (1) by lifting basket from rail system.(If you tilt the door, it will be easier.)

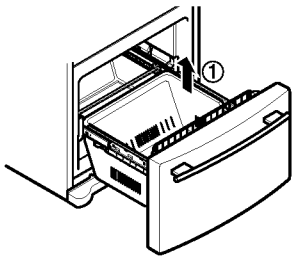

- Press both hangers with your thumbs to lift it up.
- Separate the left and right rail cover

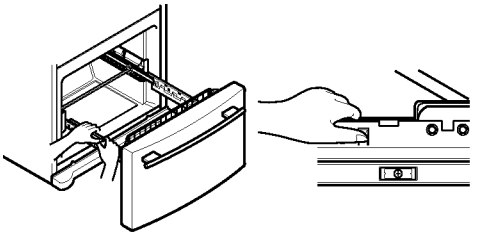

- Remove the screws(2) of the rail on both sides.

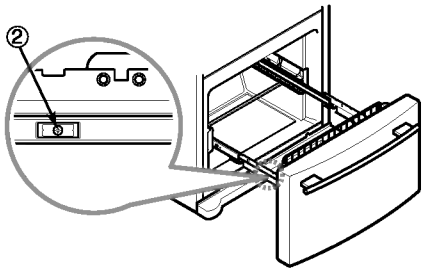

- With both hands, hold both sides of the door and pull it up to separate it from the rails.

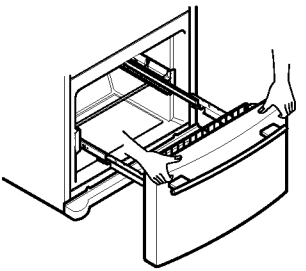

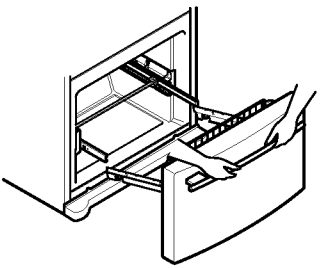

- With both hands, hold the center bar and push it in to let both rails fitted simultaneously.

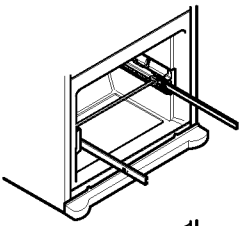

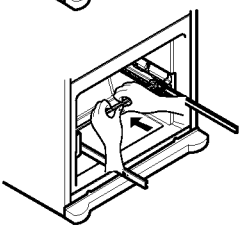

⚠ **CAUTION:** When you remove the drawer, do not hold the handle. If it may come off and it could cause personal injury.

⚠ **CAUTION:** When laying the drawer down, be careful not to damage the floor or hurt your feet by the sharp edges on hinge side.

HOW TO REMOVE AND INSTALL THE PULLOUT DRAWER

IMPORTANT: To avoid possible injury or product or property damage, you will need two people to perform the following instructions.

2. Installing Pullout Drawer

- With both hands, hold the center bar and push it out to let both rails out to full extension simultaneously.

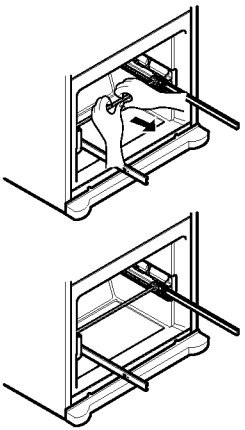

- Hook door supports (1) into rail tabs (2).

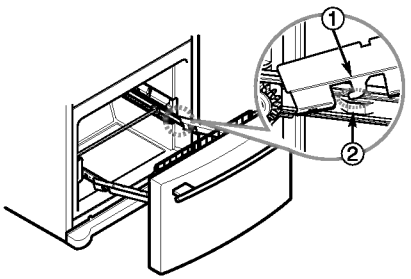

- Lower door into final position and tighten the screws (3).

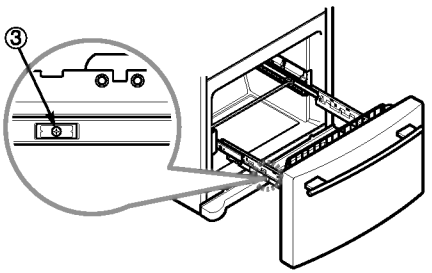

- Make sure you have a right rail cover for each side.

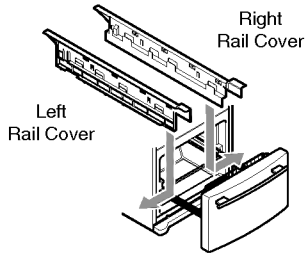

- Align the top holes of the rail cover with the top holes of the door supports to assemble the rail covers.

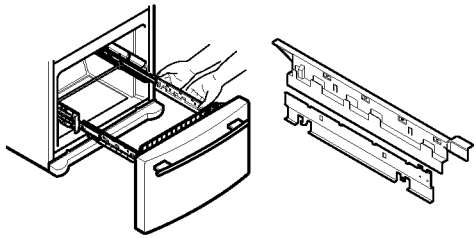

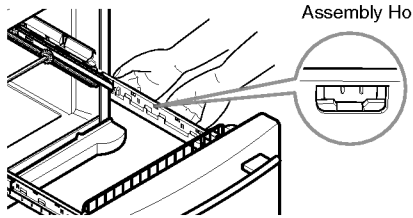

- With the drawer pulled out to full extension, insert the lower basket (4) in the rail assembly.

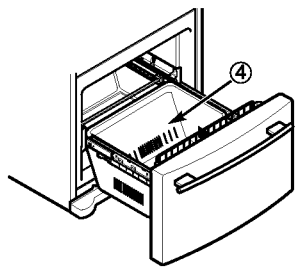

⚠ **WARNING:** To prevent accidental child and pet entrapment or suffocation risk. DO NOT allow them to play inside of drawer.

⚠ **WARNING:** DO NOT step or sit down on freezer door.

LEVELING AND DOOR ALIGNMENT

Leveling

Your refrigerator has two front leveling screws—one on the right and one on the left. If your refrigerator seems unsteady or you want the doors to close easier, adjust the refrigerator's tilt using the instructions below:

1. Plug the refrigerator's power cord grounded outlet. Move the refrigerator into its final position.

   To remove the base cover

   1. Open the Freezer Drawer. (Drawer not shown for clarity.)
   2. Once drawer is open there is sufficient clearance to remove screws on top of cover.

   To replace base cover:

   • Place cover into position and insert and tighten screws.

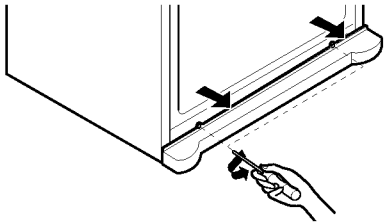

2. Turn the leveling screw clockwise to raise that side of the refrigerator or counterclockwise to lower it. It may take several turns of the leveling screw to adjust the tilt of the refrigerator.

   NOTE: Having someone push against the top of the refrigerator takes some weight off the leveling screws. This makes it easier to adjust the screws.

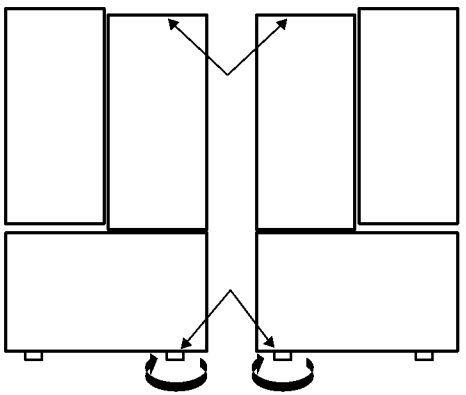

3. Open both doors again and check to make sure that they close easily. If not, tilt the refrigerator slightly more to the rear by turning both leveling screws clockwise. It may take several more turns, and you should turn both leveling screws the same amount.
4. Re-adjust if necessary.
5. Replace the base cover.

   NOTE: Your new refrigerator is uniquely designed with two fresh food doors. Either door can be opened or closed independently of one another. You may have to exert slight pressure on doors to get them to close completely.

Door Alignment

If the space between your doors is uneven, follow the instructions below to align the doors:

1. With one hand, lift up the door you want to raise at middle hinge.
2. With other hand, use pliers to insert snap ring as shown.
3. Insert additional snap rings until the doors are aligned. (Three snap rings are provided with unit.)

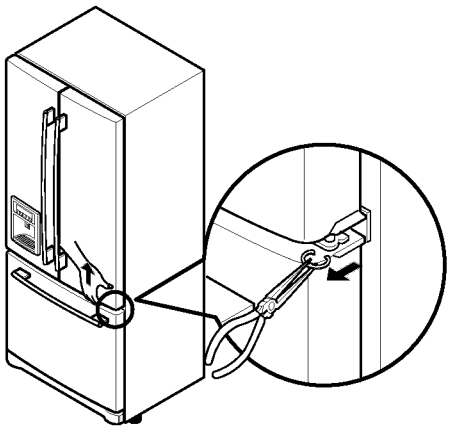

SETTING THE CONTROLS

- Your refrigerator has a control pad on the dispenser that lets you regulate the temperature in the freezer and refrigerator compartments.
- Initially set the REFRIGERATOR CONTROL at 3°C and the FREEZER CONTROL at –18°C. Leave it at this setting for 24 hours (one day) to stabilize. Then adjust the compartment temperature as desired.

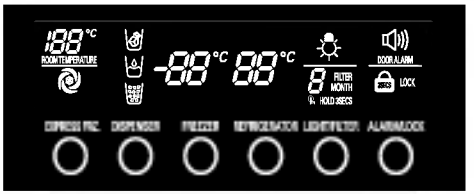

- Every time you touch the freezer temperature adjust button, the temperature changes in a circulating order of "-13"→"-14"→"-15"→"-16"→ "-17"→"-18"→"-19"→"-20"→"-21"→"-13".
- Every time you touch the refrigerator temperature adjust button, the temperature changes in a circulating order of "0"→"8"→"7"→"6"→"5"→"4"→"3"→"2"→"1"→"0".

⚠ **CAUTION:** The control display is operated by touch. Excessive moisture on the display may cause a malfunction. Please keep display clean and dry.

NOTE: This is to prevent the unintended working error when touching again. When 10 seconds has passed since final touch, the existed display blinks once and then the key starts to work by second touch.

EXPRESS FRZ.

- When you touch the "EXPRESS FRZ." button, the graphic [ ] will light up in the display and it continues for 24hours. It will automatically shut off after 24hours have passed.
  Or you can stop this function manually by touching the button one more time.
- This function imcreases both icemaking and freezing capabilities.

Dispenser



- You can select water, crushed ice, or cubed ice by touching DISPENSER button as you desire.
- There could be some dripping after dispensing.
  It is recommended to hold your cup for a couple of seconds after dispensing.

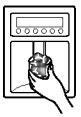

NOTE : The dispenser is desinged not to operate while either refrigerator door is left open.

Filter

- It displays in months the number of months left to exchange the filter from the moment power is connected to the refrigerator.
- If you have changed the filter after 6 months of use or want to reset the filter display, press and hold the Filter Reset Button 3 seconds or more and the filter display will be initialized with a buzzing sound.

NOTE : The average life of the filter is 6 months.

Alarm

- When the power is connected to the refrigerator, door alarm is initially set OFF and door alarm display will show . When you touch ALARM/LOCK button, the display will change to and door alram function is now activated.
- When either refrigerator or the freezer door is left open for more than 60 seconds, the alarm will ding to let you know the door is open.
- When you close the door, the door alarm will stop dinging.
- If you want to disable the door alarm function, touch ALARM/LOCK button then the door alarm display will switched to .

Lock

- When the power is initially connected to the refrigerator, Lock Function is Off.
- If you want to activate Lock Function to lock other buttons, press and hold ALARM/LOCK button for 3 seconds or more. sign will be displayed and the Lock Function is now enabled.
- No buttons except ALARM/LOCK and dispenser button will work while lock function is enabled.
- To disable the Lock Function, press and hold ALARM/LOCK button for 3 seconds or more.

ENSURING PROPER AIR CIRCULATION

Do not block air channels with any objects or food for air circulation to prevent food loss due to the lack of cooling air.

⚠ CAUTIONS

Throw away the first 20 ice cubes made, and the first 7 glass of dispensed water after installation.
This is also recommended if the refrigerator has not been used for a long time.

Keep children away from the dispenser.
Children may play with or damage the controls.

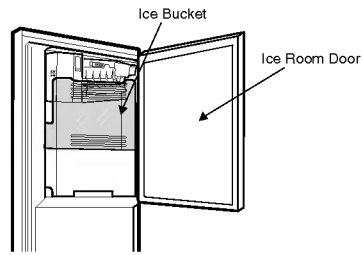

Storing cans or other items in the ice bucket may damage the icemaker.

Never use thin crystal glass or crockery to collect ice cubes.
Such glasses or containers may be broken.

Get ice cubes first into a glass before dispensing water.
Water may splash if it is done in opposite way..

Keep your hands and tools out of the ice room door and dispenser chute..
You could break something or injure yourself.

Shake the ice bucket occasionally to level the ice in it.
Sometimes the ice piles up near the icemaker, causing the icemaker to misread the amount of ice cubes and stop producing ice.

Never use narrow or deep glass.
Ice could be stuck inside dispenser chute and, thus the refrigerator could fail.

Keep the glass at a proper distance from dispenser chute.
A glass too close to the outlet may hinder ice from coming out.

Keep the ice room door closed tightly after opening it.
If the ice room door were not closed tightly, the cold air in the ice room would come into refrigerator compartment and freeze food. This could cause the ice maker not to produce ice.

Close the freezer door until you hear the sound "flick".
When the door doesn't properly close, ice in the freezer could be melt, or frost and icicle could be formed within the refrigerator.

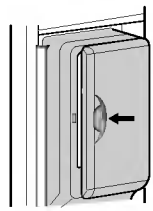

HOW TO USE A NEW DOOR ICE BUCKET

The ice maker will stop producing ice when ice bucket is full. If you need more ice, please use the extra ice bucket in freezer compartment so icemaker can keep producing ice.

How to remove the Door Ice Bucket.

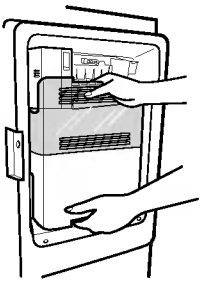

1. Grip the handle as shown in the picture

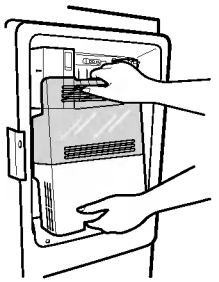

2. Lift the lower part slightly.

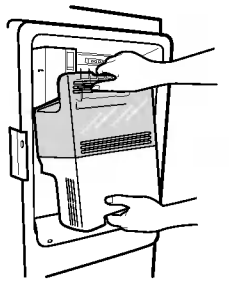

3. Take the ice bucket out slowly.

How to reinstall the Door Ice Bucket.

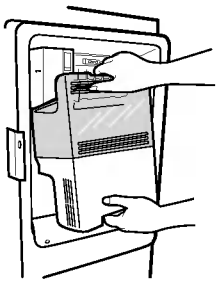

1. Replace ice bucket by slightly slanting it to avoid touching the ice maker.

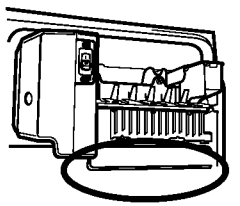

* Avoid touching the automatic shut off arm when replacing the ice bucket.

ADJUSTING CONTROL SETTINGS

Give the refrigerator time to cool down completely before making final adjustments. It is best to wait 24 hours before doing this. The mid-settings indicated in the previous section should be correct for normal household refrigerator usage. The controls are set correctly when milk or juice is as cold as you like and when ice cream is firm.

The refrigerator control functions as the thermostat for the entire appliance (refrigerator and freezer sections). The higher the number setting, the longer the compressor will run to keep the temperature colder. The freezer control adjusts the cold air flow from the freezer to the refrigerator. Setting the freezer control to a lower temperature keeps more cold air in the Freezer compartment to make it colder.

If you need to adjust temperatures in the refrigerator or freezer, start by adjusting the refrigerator. Then wait 24 hours before checking the freezer temperature. If it is too warm or too cold, then adjust the freezer control.

Use the settings listed in the chart below as a guide. **Always remember to wait at least 24 hours between adjustments.**

CONDITION/ REASON:	RECOMMENDED ADJUSTMENT:
■ REFRIGERATOR section too warm – Door opened often – Large amount of food added – Room temperature very warm	Set REFRIGERATOR control to next lower number, wait 24 hours, then re-check
■ FREEZER section too warm/ice not made fast enough – Door opened often – Large amount of food added – Very cold room temperature (can't cycle often enough) – Heavy ice usage	Set FREEZER control to next lower number, wait 24 hours, then re-check
– Air vents blocked by items	Move items out of airstream
■ REFRIGERATOR section too cold – Controls not set correctly for your conditions	Set REFRIGERATOR control to next higher number, wait 24 hours, then re-check
■ FREEZER section too cold – Controls not set correctly for your conditions	Set FREEZER control to next higher number, wait 24 hours, then re-check

FOOD STORAGE GUIDE

Wrap or store food in the refrigerator in airtight and moisture-proof material unless otherwise noted. This prevents food odor and taste transfer throughout the refrigerator. For dated products, check date code to ensure freshness.

Items	How to
Butter or margarine	▶ Keep opened butter in a covered dish or closed compartment. When storing an extra supply, wrap in freezer packaging and freeze.
Cheese	▶ Store in the original wrapping until you are ready to use it. Once opened, rewrap tightly in plastic wrap or aluminum foil.
Milk	▶ Wipe milk cartons. For best storage, place milk on interior shelf, not on door shelf.
Eggs	▶ Store in original carton or Egg Box on interior shelf, not on door shelf.
Fruit	▶ Wash, let dry, and store in refrigerator in plastic bags or in the crisper. Do not wash or hull berries until you are ready to use them. Sort and keep berries in their original container in a crisper, or store in a sloosely closed paper bag on a refrigerator shelf.
Leafy vegetables	▶ Remove store wrapping and trim or tear off bruised and discolored areas. Wash in cold water and drain. Place in plastic bag or plastic container and store in crisper.
Vegetables with skins (carrots, peppers)	▶ Place in plastic bags or plastic container and store in crisper.
Fish	▶ Use fresh fish and shellfish the same day purchased.
Leftovers	▶ Cover leftovers with plastic wrap or aluminum foil. Plastic containers with tight lids can also be used.

STORING FROZEN FOOD

NOTE: For further information about preparing food for freezing or food storage times, check a freezer guide or a reliable cookbook.

Packaging

Successful freezing depends on correct packaging. When you close and seal the package, it must not allow air or moisture in or out. If it does, you could have food odor and taste transfer throughout the refrigerator and also dry out frozen food.

Packaging recommendations:

- Rigid plastic containers with tight-fitting lids
- Straight-sided canning/freezing jars
- Heavy-duty aluminum foil
- Plastic-coated paper
- Non-permeable plastic wraps
- Specified freezer-grade self-sealing plastic bags

Follow package or container instructions for proper freezing methods.

Do not use:

- Bread wrappers
- Non-polyethylene plastic containers
- Containers without tight lids
- Wax paper or wax-coated freezer wrap
- Thin, semi-permeable wrap

⚠ **CAUTION:** Do not keep beverage cans or plastic food containers in the freezer compartment. They may be break if it freezes.

Freezing

Your freezer will not quick-freeze any large quantity of food. Do not put more unfrozen food into the freezer than will freeze within 24 hours. Leave enough space in the freezer for air to circulate around packages. Be careful to leave enough room at
the front so the door can close tightly.

Storage times will vary according to the quality and type of food, the type of packaging or wrap used (airtight and moisture-proof) and the storage temperature. Ice crystals inside a sealed package are normal. This simply means that moisture in the food and air inside the package have condensed, creating ice crystals.

NOTE: Allow hot foods to cool at room temperature for 30 minutes, then package and freeze. Cooling hot foods before freezing saves energy.

REFRIGERATOR SECTION

WATER DISPENSER

Tray can be easily removed by pressing and pulling it.

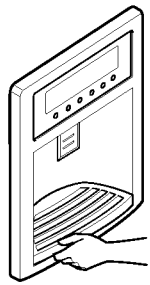

Tilt up the front of tray slightly and snap the ribs into the holes to reinstall the tray.

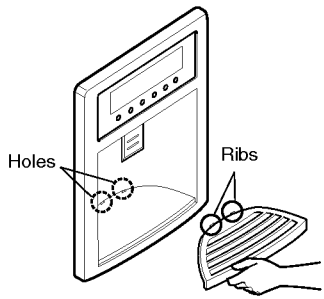



⚠ **WARNING:** Do not throw your hands in the water & ice opening. Doing so can result in amputation or cuts.

REFRIGERATOR SHELVES

The shelves in your refrigerator are adjustable to meet your individual storage needs. Your model may have glass or wire shelves.

Storing similar food items together in your refrigerator and adjusting the shelves to fit different heights of items will make finding the exact item you want easier; it will also reduce the amount of time the refrigerator door is open, saving energy.

IMPORTANT: Do not clean glass shelves with warm water when they are cold. Shelves may break if exposed to sudden temperature changes or impact, such as bumping. For your protection, glass shelves are made with tempered glass, which will shatter into small pebble-sized pieces.

NOTE: Glass shelves are heavy. Use special care when removing them to avoid dropping them.

Adjusting Shelves

Remove shelves from the shipping position and replace shelves in the position you want.

- **To remove a shelf**—Tilt up the front of the shelf in the direction of (1) and lift it in the direction of (2). Pull the shelf out.

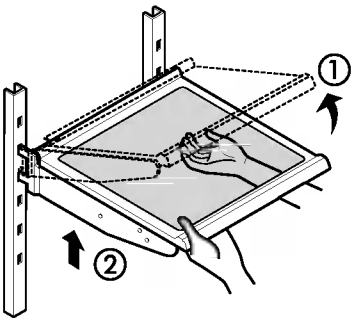

- **To replace a shelf**—Tilt the front of the shelf up and guide the shelf hooks into the slots at a desired height. Then lower the front of the shelf so that the hooks drop into the slots.

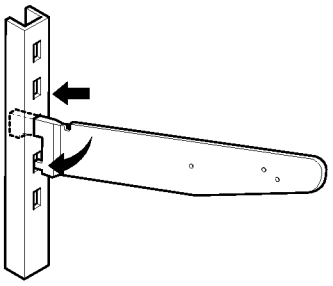

⚠ **CAUTION:** Make sure that shelves are level from one side to the other. Failure to do so may result in the shelf falling or spilling food.

Sliding Out Shelves

You can slide glass shelves in and out of your refrigerator as follows.

- **To slide the shelf out,** carefully pull front of shelf toward you.
- **To slide shelf in,** push shelf in until it stops.

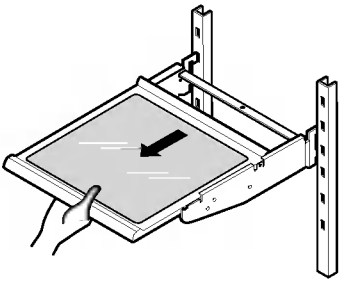

BOTTLE HOLDER (Optional)

Bottles can be stored laterally with this bottle holder. It can be attached to any shelf.

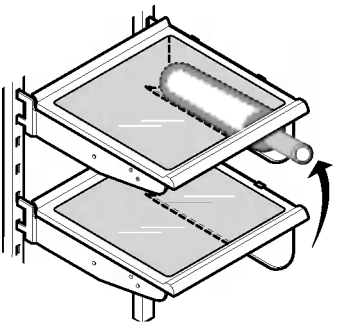

Bottle holder can be removed by pulling it straight out and installed by placing it at the end of the shelf you want and pushing it inward.

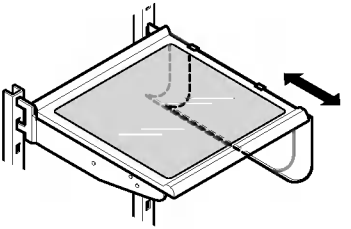

SNACK PAN

While holding the chef fresh with one hand, pull it forward slightly.

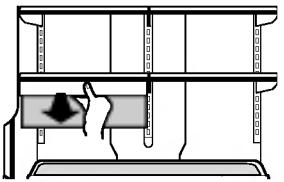

OPTIBIN CRISPERS

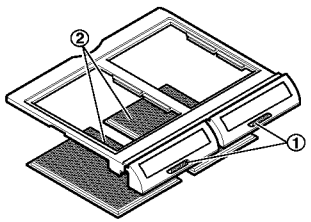

The Optibin Crispers provide fresher-tasting fruit and vegetables by letting you easily control humidity inside the crisper. The Optibin Crispers include: 1) a humidity control knob at the front of the crisper cover and 2) a large lattice on the inner surface of the cover to hold or release moisture.

CRISPER HUMIDITY CONTROL

You can control the amount of humidity in the moisture-sealed crispers. Store vegetables or fruits requiring more or less humidity in separate crispers. Adjust the control to any setting between and .

- lets moist air out of the crisper for best storage of fruits.
- keeps moist air in the crisper for best storage of fresh, leafy vegetables.

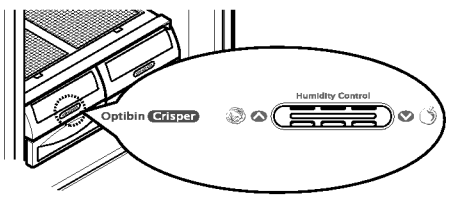

⚠ **CAUTION:** The glass shelf over the crisper is not firmly secured. Be careful when tilting.

REMOVING CRISPER

▶ **Crispers without rails**

1. To remove, pull drawer out to full extension.
2. Lift the front of the crisper, then pull straight out.
3. To install, slightly tilt up the front and insert drawer into frame and push back into place.

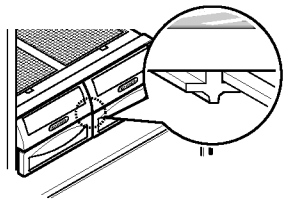

▶ **Crispers with rails**

To remove crisper:

1. Pull drawer out to full extension.
2. Lift the front of basket up and pull straight out.

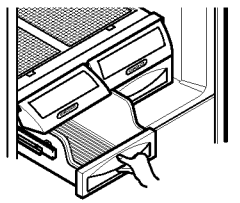

To replace crisper:

1. Push rails to the back of the compartment.

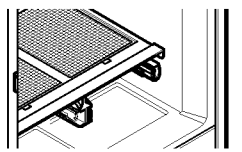

2. Insert the back corner of the basket into frame.

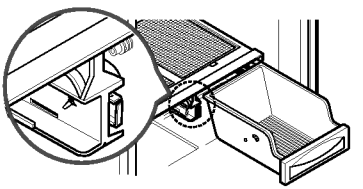

3. Slightly tilt up the front and push back until it snaps into place.

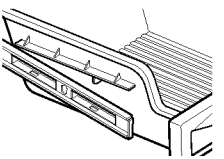

To remove crisper door flap:

1. Raise the door flap as high as it will open.
2. Press the plastic hinge toward the center of the door flap with your finger.
3. Lift the door out of its place.
4. To replace, reverse above procedure.

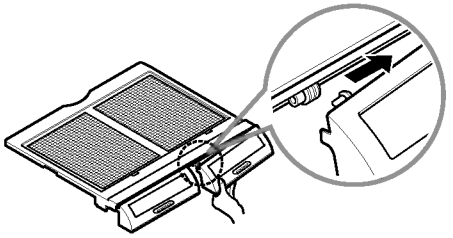

To remove the glass:

1. Lift up the glass after inserting a finger into a hole under the crisper cover.
2. Pull the glass up and out.

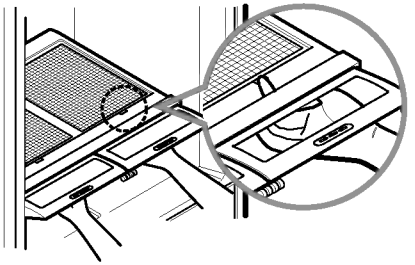

CRISPER COVER WITH LATTICE ON INNER SURFACE

To remove the lattice on inner surface:

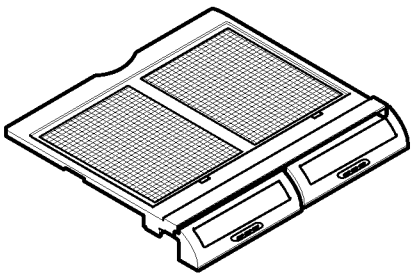

1. Remove crisper cover (as illustrated above).
2. Hold the glass cover and turn the crisper cover over.
3. For each lattice hold lattice and pull sides of the cover outward to remove lattice.

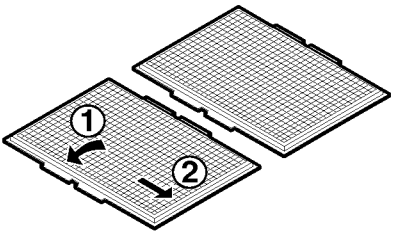

To replace lattice on inner surface:

1. For each lattice insert middle tab in 1 (closed to glass cover)and pull sides of the cover to insert lattice.

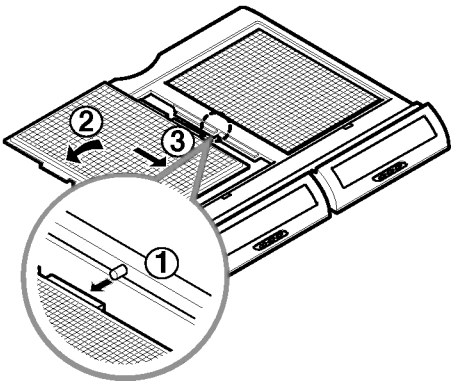

DAIRY BIN (Optional)

1. **To remove the dairy bin,** simply lift it and pull straight out.
2. **To replace the dairy bin,** slide it in above the desired location and push down until it stops.

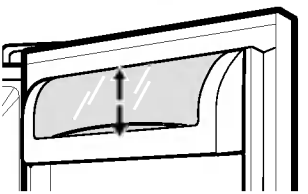

MODULAR DOOR BIN

The door bins are removable for easy cleaning and adjusting.

1. To remove the bin, simply lift the bin up and pull straight out.
2. To replace the bin, slide it in above the desired support button and push down until it stops.

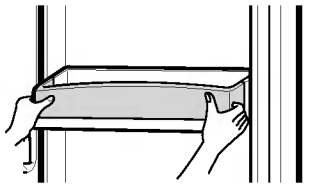

⚠ **WARNING:** Somebody can be hurt if door bins are not firmly assembled.

⚠ **NOTE:** DO NOT adjust a bin that is loaded with food.

⚠ **CAUTION:** DO NOT allow children to play with baskets. Sharp corners on baskets could cause injury.

EGG BOX (Optional)

Store Egg Box on interior shelf, not on door shelf.

⚠ **CAUTION:** Do not use the egg box as an ice storage bin in the freezer compartment. The egg box can easily break if it freezes.

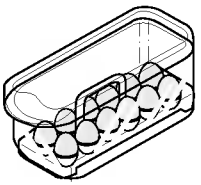

FREEZER SECTION

TILTING DOOR

The tilting door provides easy access for stored foods.

How to use:

Tilt the door down and pull it out.

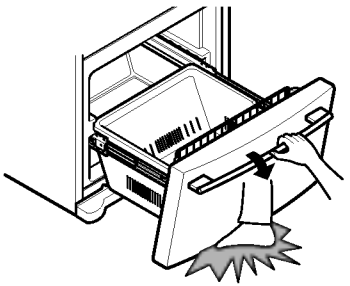

⚠ **WARNING:** Be careful when you open tilting door so that you do not injure your foot!

TILT-OUT DOOR BASKET (Optional)

To remove basket

1. Pull one of the brackets upward.
2. Remove basket from both brackets.

To replace basket

1. Insert bracket into one side. Hook end of basket into bracket.
2. Hook other basket end into other bracket. Push bracket down into place.
3. Be sure back of basket goes behind retention tab on each bracket.

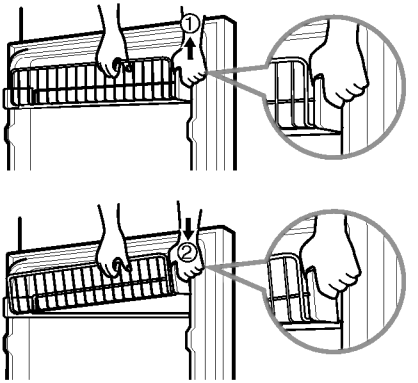

ICE BIN

1. To separate the ice bin, pull out the drawer as much as possible.
2. Gently lift and pull out the ice bin.
3. To install, pull out the drawer as much as possible and set the ice bin in its correct position, then push in the drawer.

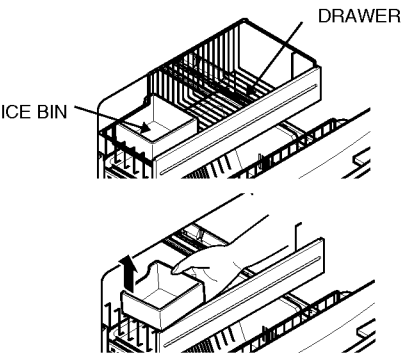

DURABASE

1. To remove the Durabase, push it back to the end as much as possible. Tilt up the front of the Durabase and pull straight out.
2. To install, insert the Durabase in rail assembly.

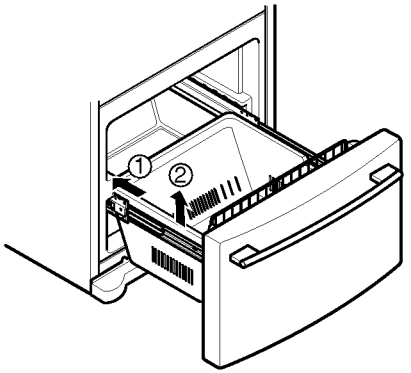

DURABASE DIVIDER

The Durabase divider allows you to organize the Durabase area into sections.

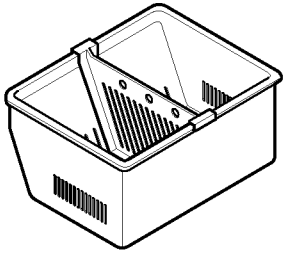

1. To remove, pull divider staight up.
2. To install, hook top corners of divider over top edge of durabase.

⚠ **WARNING:** When the guide of the freezer drawer is removed, children may crawl inside.

PULL OUT DRAWER

To separate the drawer, push the front left and right hooks in ① direction to pull up and remove.

Then gently lift the gear part of rear left and right side of the drawer and pull it out in ③ direction.

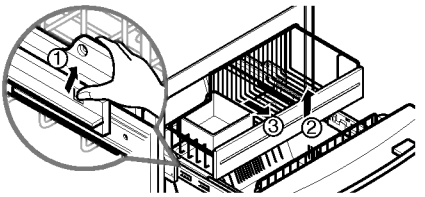

To install, reposition the gear part of rear left and right side of the drawer after pulling out both rails as much as possible, and gently push down both left and right side while checking the hook on the front part.

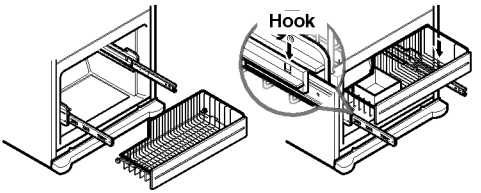

FILTER

It is recommended that you replace the filter when the water filter indicator light turns on or your water dispenser or ice maker performance decreases noticeably.

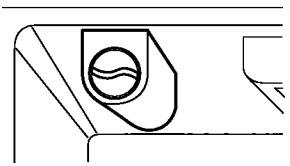

After changing the water filter cartridge, reset the water filter status display and indicator light by pressing and holding the button for 3 seconds.

1. Remove the old cartridge.

Place a container under the hole of filter holder.

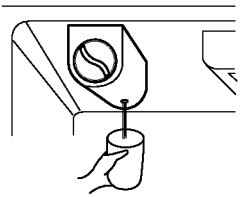

NOTE: When filter is being removed, the water drains through the hole.

Rotate the knob of the cartridge counter clockwise.

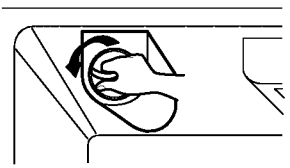

Pull out the filter cartridge.

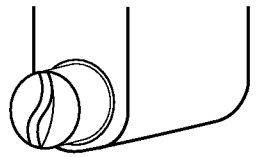

2. Replace with a new cartridge.

Take the new cartridge out of its packaging and remove protective cover from the o-rings.

With cartridge knob in the vertical position, push the new filter cartridge into the cover until it stops.

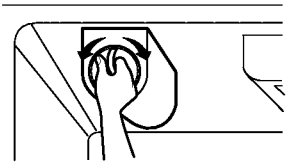

If you can't turn the filter from side to side, it isn't fully inserted. Push it in firmly and twist it into place. You will hear the snap when it clicks into place.

Using its handle, twist the cartridge clockwise about 1/4 turn. You will hear the snap when it clicks into place.

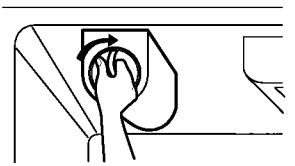

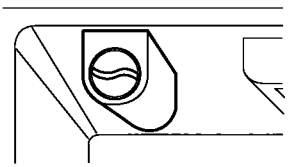

3. Flushing the Water System After Replacing Filter
Dispense water through the water dispenser for 3 minutes to purge the system.

⚠ WARNING



Explosion Hazard

Use non-flammable cleaner.

Failure to do so can result in death, explosion, or fire.

Both the refrigerator and freezer sections defrost automatically. However, clean both sections about once a month to prevent odors. Wipe up spills immediately.

GENERAL CLEANING TIPS

- Unplug refrigerator or disconnect power.
- Remove all removable parts, such as shelves, crispers, etc. Refer to sections in Using Your Refrigerator for removal instructions.
- Use a clean sponge or soft cloth and a mild detergent in warm water. Do not use abrasive or harsh cleaners.
- Hand wash, rinse and dry all surfaces thoroughly.
- Plug in refrigerator or reconnect power.

OUTSIDE

Waxing external painted metal surfaces helps provide rust protection. Do not wax plastic parts. Wax painted metal surfaces at least twice a year using appliance wax (or auto paste wax). Apply wax with a clean, soft cloth.

For products with a stainless steel exterior, use a clean sponge or soft cloth and a mild detergent in warm water. Do not use abrasive or harsh cleaners. Dry thoroughly with a soft cloth.

INSIDE WALLS (allow freezer to warm up so cloth won't stick)

To help remove odors, you can wash the inside of the refrigerator with a mixture of baking soda and warm water. Mix 2 tablespoons baking soda to 1 quart of water (26 g soda to 1 liter water.) Be sure the baking soda is completely dissolved so does it not scratch the surfaces of the refrigerator.

⚠ **CAUTION:** While cleaning the inside, do not spray water.

DOOR LINERS AND GASKETS

Do not use cleaning waxes, concentrated detergents, bleaches, or cleaners containing petroleum on plastic refrigerator parts.

PLASTIC PARTS (covers and panels)

Do not use window sprays, abrasive cleansers, or flammable fluids. These can scratch or damage the material.

LIGHT BULB REPLACEMENT

⚠ WARNING

Electrical Shock Hazard

Before replacing a burned-out light bulb, either unplug the refrigerator or turn off power at the circuit breaker or fuse box.

NOTE: Moving the control to the OFF position does not remove power to the light circuit.

NOTE: Not all appliance bulbs will fit your refrigerator. Be sure to replace the bulb with one of the same size, shape and wattage.

To change the refrigerator light:

1. Unplug Refrigerator, or disconnect power at the circuit breaker.
2. If necessary, remove top shelf or shelves.
3. Using a flat instrument, gently pry the lamp cover loose in the front as shown. Rotate downward to remove rear tabs.
4. Make sure the bulbs are cool to the touch. Turn bulbs counterclockwise to remove. Insert new bulb(s).
5. Assemble in reverse order by snapping the Lamp Cover in, engaging the rear tabs followed by the front tabs.

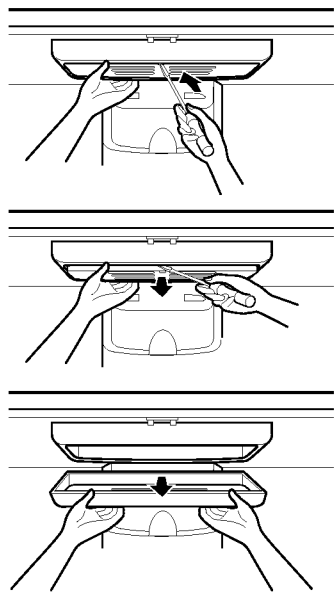

To change the freezer light:

1. Unplug refrigerator power cord form outlet.
2. Using a flat instrument, gently pry the lamp cover loose in the front as shown. Rotate downward to remove the rear tabs.
3. Make sure the bulb is cool to the touch. Turn the bulb counterclockwise to remove.
4. Insert tabs on back of cover into slots in freezer ceiling. Push cover up to snap front into place.

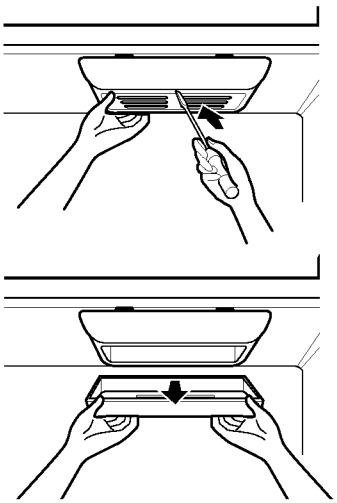

⚠ **CAUTION:** DO NOT place fingers inside of cover. Lamp may be hot.

POWER INTERRUPTIONS

1. If the power will be out for 24 hours or less, keep both refrigerator doors closed to help foods stay cold and frozen.
2. If the power will be out for more than 24 hours:
   a) Remove all frozen food and store it in a frozen food locker.

WHEN YOU GO ON VACATION

If you choose to leave the refrigerator on while you are away, follow these steps to prepare your refrigerator before you leave.

1. Use up any perishables and freeze other items.
2. Empty the ice bin.

If you choose to turn the refrigerator off before you leave, follow these steps.

1. Remove all food from the refrigerator.
2. Depending on your model, set the thermostat control (refrigerator control) to OFF. See the **Setting the Controls** section.
3. Clean refrigerator, wipe it and dry well.
4. Tape rubber or wood blocks to the tops of both doors to prop them open far enough for air to get in. This stops odor and mold from building up.

WHEN YOU MOVE

When you are moving your refrigerator to a new home, follow these steps to prepare it for the move.

1. Remove all food from the refrigerator and pack all frozen food in dry ice.
2. Depending on your model, turn the thermostat control (refrigerator control) to OFF. See the **Setting the Controls** section.
3. Unplug the refrigerator.
4. Clean, wipe and dry thoroughly.
5. Take out all removable parts, wrap them well and tape them together so they don't shift and rattle during the move. Refer to sections in Using your Refrigerator for removable instructions.
6. Depending on the model, raise the front of the refrigerator so it rolls more easily OR screw in the leveling legs all the way so they don't scrape the floor. See the **Door Closing** section.
7. Tape the doors shut and tape the power cord to the refrigerator cabinet.

When you get to your new home, put everything back and refer to the **Installing Your Refrigerator** section for preparation instructions.

ABOUT THE AUTOMATIC ICEMAKER

⚠ WARNING

Personal Injury Hazard

Avoid contact with the moving parts of the ejector mechanism, or with the heating element that releases the cubes. DO NOT place fingers or hands on the automatic icemaking mechanism while the refrigerator is plugged in.

OPERATION INSTRUCTIONS

A newly-installed refrigerator may take 12 to 24 hours to begin making ice.

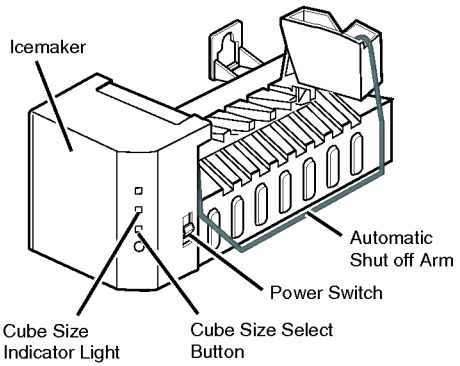

The icemaker will produce eight cubes per cycle—approximately 100–130 cubes in a 24-hour period, depending on freezer compartment temperature, room temperature, number of door openings and other operating conditions.

If the refrigerator is used before the water connection is made to the icemaker, set the power switch to **O (off)**.

When the refrigerator has been connected to the water supply, set the power switch to **I (on)**.

The icemaker will fill with water when it cools to freezing. A newly-installed refrigerator may take 12 to 24 hours to begin making ice cubes.

Throw away the first few batches of ice to allow the water line to clear.

Be sure nothing interferes with the sweep of the Automatic Shut off Arm.

When the bin fills to the level of theAutomatic Shut off Arm, the icemaker will stop producing ice.

It is normal for several cubes to be stuck together.

If ice is not used frequently, old ice cubes will become cloudy, taste stale, and shrink.

NOTE: If the cube size is smaller or larger than you expected, you can regulate the size with the cube size button.

Every time you press the cube size button, the indicator moves up on light. The higher the light position, the larger the cubes will be. Pressing at highest position returns indicator to lowest position.

WHEN YOU SHOULD SET THE ICEMAKER POWER SWITCH TO O (OFF)

- When the water supply will be shut off for several hours.
- When the ice bucket is removed for more than a minute or two.
- When the refrigerator will not be used for several days.

NORMAL SOUNDS YOU MAY HEAR

NOTE: Keeping the power switch in the **I (on)** position before the water line is connected can damage the icemaker.

- You will hear the sound of cubes dropping into the bin and water running in the pipes as the icemaker refills.

PREPARING FOR VACATION

⚠ WARNING

- If you turn the ICE Maker off with ice in the Ice Bin , the ice can melt and leak onto the floor.
- When you turn off the ice maker due to a long vacation, empty all the ice within the ice bin.

CONNECTING THE WATER LINE

BEFORE YOU BEGIN

This water line installation is not warranted by the refrigerator or icemaker manufacturer. Follow these instructions carefully to minimize the risk of expensive water damage.

Water hammer (water banging in the pipes) in house plumbing can cause damage to refrigerator parts and lead to water leakage or flooding. Call a qualified plumber to correct water hammer before installing the water supply line to the refrigerator.

To prevent burns and product damage, do not hook up the water line to the hot water line.

If you use your refrigerator before connecting the water line, make sure the icemaker power switch is in the **O (off)** position.

Do not install the icemaker tubing in areas where temperatures fall below freezing.

When using any electrical device (such as a power drill) during installation, be sure the device is double- insulated or grounded in a manner to prevent the hazard of electric shock, or is battery-powered.

All installations must be in accordance with local plumbing code requirements.

NOTE: Wear eye protection.

WHAT YOU WILL NEED

- **Copper Tubing,** 1/4″ outer diameter to connect the refrigerator to the water supply. Be sure both ends of the tubing are cut square.

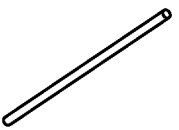

To determine how much tubing you need: measure the distance from the water valve on the back of the refrigerator to the water supply pipe. Then add 8 feet (2.4 m). Be sure there is sufficient extra tubing (about 8 feet [2.4 m] coiled into 3 turns of about 10″ [25 cm] diameter) to allow the refrigerator to move out from the wall after installation.

- **A cold water supply.** The water pressure must be between 20 and 120 p.s.i. on models without a water filter and between 40 and 120 p.s.i. on models with a water filter.
- **Power drill.**
- **1/2″ or adjustable wrench.**
- **Straight- and Phillips-blade screwdriver.**

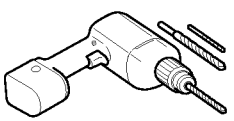

- **Two 1/4″ outer diameter compression nuts and 2 ferrules (sleeves)** to connect the copper tubing to the shutoff valve and the refrigerator water valve.

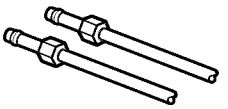

- If your existing copper water line has a flared fitting at the end, you will need an **adapter** (available at plumbing supply stores) to connect the water line to the refrigerator OR you can cut off the flared fitting with a tube cutter and then use a compression fitting.

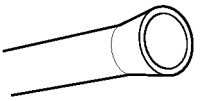

- **Shutoff valve to connect to the cold water line.** The shutoff valve should have a water inlet with a minimum inside diameter of 5/32″ at the point of connection to the COLD WATER LINE. Saddle-type shutoff valves are included in many water supply kits. Before purchasing, make sure a saddle-type valve complies with your local plumbing codes.

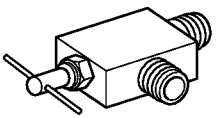

INSTALLATION INSTRUCTIONS

Install the shutoff valve on the nearest frequently used drinking water line.

1. SHUT OFF THE MAIN WATER SUPPLY

Turn on the nearest faucet to relieve the pressure on the line.

2. CHOOSE THE VALVE LOCATION

Choose a location for the valve that is easily accessible. It is best to connect into the side of a vertical water pipe. When it is necessary to connect into a horizontal water pipe, make the connection to the top or side, rather than at the bottom, to avoid drawing off any sediment from the water pipe.

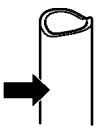

3. DRILL THE HOLE FOR THE VALVE

Drill a 1/4″ hole in the water pipe (even if using a self-piercing valve) using a sharp bit. Remove any burrs resulting from drilling the hole in the pipe. Take care not to allow water to drain into the drill. Failure to drill a 1/4″ hole may result in reduced ice production or smaller cubes.

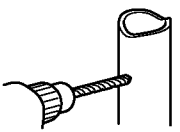

INSTALLATION INSTRUCTIONS (CONTINUED)

4. FASTEN THE SHUTOFF VALVE

Fasten the shutoff valve to the cold water pipe with the pipe clamp.

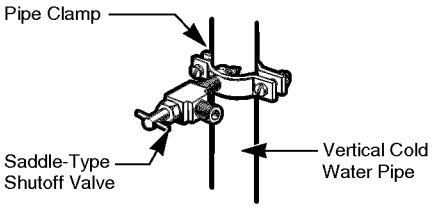

NOTE: Commonwealth of Massachusetts Plumbing Codes 248CMR shall be adhered to. Saddle valves are illegal and use is not permitted in Massachusetts. Consult with your licensed plumber.

5. TIGHTEN THE PIPE CLAMP

Tighten the clamp screws until the sealing washer begins to swell.

NOTE: Do not overtighten or you may crush the tubing.

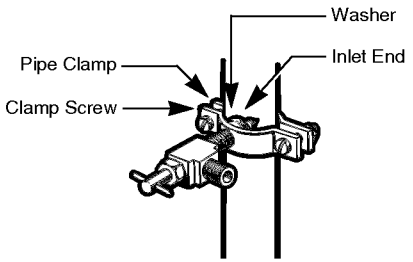

6. ROUTE THE TUBING

Route the tubing between the cold water line and the refrigerator.

Route the tubing through a hole drilled in the wall or floor (behind the refrigerator or adjacent base cabinet) as close to the wall as possible.

NOTE: Be sure there is sufficient extra tubing (about 8 feet coiled into 3 turns of about 10″ diameter) to allow the refrigerator to move out from the wall after installation.

7. CONNECT THE TUBING TO THE VALVE

Place the compression nut and ferrule (sleeve) for copper tubing onto the end of the tubing and connect it to the shutoff valve. Make sure the tubing is fully inserted into the valve. Tighten the compression nut securely.

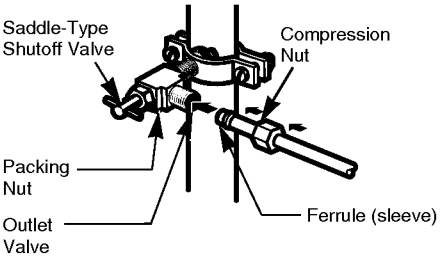

NOTE: Commonwealth of Massachusetts Plumbing Codes 248CMR shall be adhered to. Saddle valves are illegal and use is not permitted in Massachusetts. Consult with your licensed plumber.

8. FLUSH OUT THE TUBING

Turn the main water supply on and flush out the tubing until the water is clear.

Shut the water off at the water valve after about one quart of water has been flushed through the tubing.

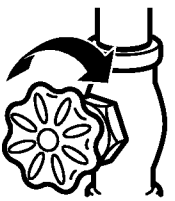

9. CONNECT THE TUBING TO THE REFRIGERATOR

Removing and Replacing Valve Cover

NOTE: Before making the connection to the refrigerator, be sure the refrigerator power cord is not plugged into the wall outlet.

1. Place a compression nut and a ferrule(sleeve) onto the end of tubing.

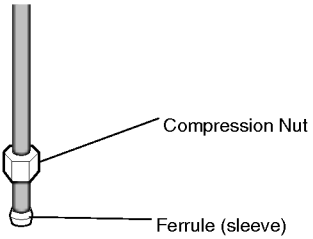

2. Insert the tube into the valve and fasten with wrench as shown in the figure below.

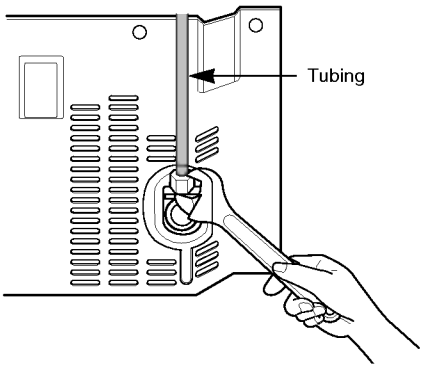

⚠ **CAUTION:** Check to see if water dripping occurs at water line connections.

NOTE: Water valve connector SVC guide
When separating the connector which is connected in the Valve, press the portion of ① and pull the connector with finger as shown in the the picture

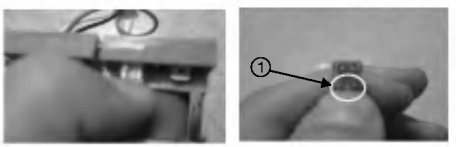

10. TURN THE WATER ON AT THE SHUTOFF VALVE

Tighten any connections that leak.

Reattach the compressor compartment access cover.

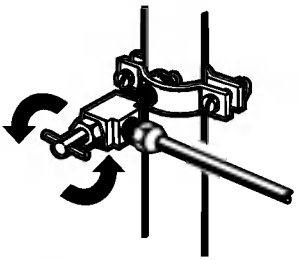

11. PLUG IN THE REFRIGERATOR

Arrange the coil of tubing so that it does not vibrate against the back of the refrigerator or against the wall. Push the refrigerator back to the wall.

12. START THE ICEMAKER

Set the icemaker power switch to the **ON** position. The icemaker will not begin to operate until it reaches its operating temperature of –9°C or below. It will then begin operation automatically if the icemaker power switch is in the **I (on)** position.

UNDERSTANDING SOUNDS YOU MAY HEAR

Your new refrigerator may make sounds that your old one didn't make. Because the sounds are new to you, you might be concerned about them. Most of the new sounds are normal. Hard surfaces, like the floor, walls and cabinets, can make the sounds seem louder than they actually are. The following describes the kinds of sounds and what may be making them.

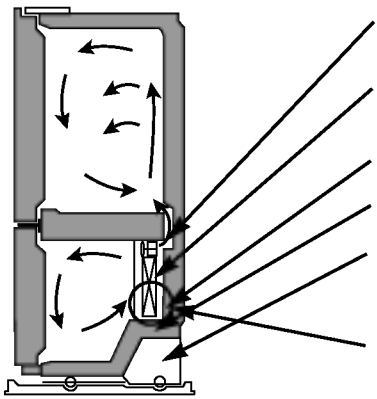

- The defrost timer will click when the automatic defrost cycle begins and ends. The thermostat control (or refrigerator control, depending on the model) will also click when cycling on and off.
- Rattling noises may come from the flow of refrigerant, the water line, or items stored on top of the refrigerator.
- Your refrigerator is designed to run more efficiently to keep your food items at the desired temperature. The high efficiency compressor may cause your new refrigerator to run longer than your old one, and you may hear a pulsating or high-pitched sound.
- You may hear the evaporator fan motor circulating the air through the refrigerator and freezer compartments.
- As each cycle ends, you may hear a gurgling sound due to the refrigerant flowing in your refrigerator.
- Contraction and expansion of the inside walls may cause a popping noise.
- Water dripping on the defrost heater during a defrost cycle may cause a sizzling sound.
- You may hear air being forced over the condenser by the condenser fan.
- You may hear water running into the drain pan during the defrost cycle.
- You can hear the noise occurred from the icing fan at the freezer or the left side of the refrigerator when doors are open.

	Check if...	Then...
REFRIGERATOR DOES NOT OPERATE	The power supply cord is unplugged.	▶ Firmly plug the cord into a live outlet with proper voltage.
	A household fuse has blown or circuit breaker tripped.	▶ Replace the fuse or reset the circuit breaker.
	The refrigerator control is set to the OFF position.	▶ Refer to the **Setting the Controls** section on page 14.
	Refrigerator is in the defrost cycle.	▶ Wait about 30 minutes for defrost cycle to end.
VIBRATION OR RATTLING NOISE	The refrigerator is not resting solidly on the floor.	▶ Floor is weak or uneven or leveling legs need adjusting. See **Installation** section on page 6.
LIGHTS DO NOT WORK	The power supply cord is unplugged.	▶ Firmly plug the cord into a live outlet with proper voltage.
	Light bulb is loose in the socket.	▶ Turn the refrigerator control to the OFF position and unplug the refrigerator. Gently remove the bulb and reinsert. Then plug in refrigerator and reset the refrigerator control.
	Light bulb has burned out.	▶ Replace with an appliance bulb of the same wattage, sizeand shape available at your local hardware store. (See the **Changing the Light Bulb(s)** section on pages 25-26.) Turn the temperature control to the OFF position and unplug the refrigerator prior to replacement.

TROUBLESHOOTING GUIDE

	Check if...	Then...
COMPRESSOR MOTOR SEEMS TO RUN TOO MUCH	The refrigerator that was replaced was an older model.	▶ Modern refrigerators with more storage space require more operating time.
	The room temperature is hotter than normal.	▶ The motor will run longer under warm conditions. At normal room temperatures, expect your motor to run about 40% to 80% of the time. Under warmer conditions, expect it to run even more often.
	The door is opened often or a large amount of food has just been added.	▶ Adding food and opening the door warms the refrigerator. It is normal for the refrigerator to run longer in order to cool the refrigerator back down. Adding a large amount of food warms the refrigerator. See the **Food Storage Guide** section on page 17. In order to conserve energy, try to get everything you need out of the refrigerator at once, keep food organized so it is easy to find and close the door as soon as the food is removed.
	The refrigerator was recently plugged in and the refrigerator control was set correctly.	▶ The refrigerator will take up to 24 hours to cool completely.
	The refrigerator control is not set correctly for the surrounding conditions.	▶ See the **Adjusting Control Settings** section on page 17.
	The doors are not closed completely.	▶ Push the doors firmly shut. If they will not shut all the way, see **Doors will not close completely** below.
	The condenser coils are dirty.	▶ This prevents air transfer and makes the motor work harder. Clean the condenser coils. Refer to the **Care and Cleaning** section on pages 25-26.
DOORS WILL NOT CLOSE COMPLETELY	The refrigerator is not level.	▶ See **Leveling and Door Alignment** on page 13.
	Food packages are blocking the door open.	▶ Rearrange food containers to clear door and door shelves.
	The ice bin, crisper cover, pans, shelves, door bins or baskets are out of position.	▶ Push bins all the way in and put crisper cover, pans, shelves and baskets into their correct positions. See the **Using Your Refrigerator** section on pages 14-24.
	The gaskets are sticking.	▶ Clean gaskets and the surface that they touch. Rub a thin coat of paraffin wax on the gaskets after cleaning.
	The refrigerator wobbles or seems unstable.	▶ Level the refrigerator. Refer to the **Leveling and Door Alignment** section on page 13.
	The doors were removed during product installation and not properly replaced.	▶ Remove and replace the doors according to the **Removing and Replacing Refrigerator handles and doors** section on pages 7–12, or call a qualified service technician.
FROST OR ICE CRYSTALS ON FROZEN FOOD	The door is not closing properly.	▶ See **Doors will not close completely** above.
	The door is opened often.	▶ When the door is opened, warm, humid air is allowed in the freezer, resulting in frost.

TROUBLESHOOTING GUIDE

	Check if...	Then...
ICE HAS OFF-TASTE OR ODOR	The icemaker was recently installed.	▶ Discard first few batches of ice to avoid discolored or off-flavored ice.
	The ice has been stored for too long.	▶ Throw away old ice and make new supply.
	The food has not been wrapped tightly in either compartment.	▶ Rewrap foods since odors may migrate to the ice if food is not wrapped properly.
	The water supply contains minerals such as sulfur.	▶ A filter may need to be installed (or replaced) to eliminate taste and odor problems.
	The interior of refrigerator needs cleaning.	▶ See **Care and Cleaning** section on pages 25-26.
	Ice storage bin needs cleaning.	▶ Empty and wash bin. Discard old cubes.
THERE IS WATER IN THE DEFROST DRAIN PAN	The refrigerator is defrosting.	▶ The water will evaporate. It is normal for water to drip into the defrost pan.
	It is more humid than normal.	▶ Expect that the water in the defrost pan will take longer to evaporate. This is normal when it is hot or humid.
THE REFRIGERATOR SEEMS TO MAKE TOO MUCH NOISE	The sounds may be normal for your refrigerator.	▶ Refer to the **Understanding Sounds You May Hear** section on page 31.
THE ICEMAKER IS NOT PRODUCING ICE OR ICE CUBES ARE FREEZING TOO SLOWLY	The freezer temperature is cold enough to produce ice.	▶ Wait 24 hours after hook-up for ice production. See the **Setting the Controls** section on page 14.
	Door left open.	▶ Check to see if something is holding the door open.
CUBES PRODUCED BY ICEMAKER ARE TOO SMALL	Smaller cube size level is selected.	▶ Select larger cube size using cube size selector.
	Water shutoff valve connecting refrigerator to water line may be clogged.	▶ Call a plumber to clear the valve.
THE DOORS ARE DIFFICULT TO OPEN	The gaskets are dirty or sticky.	▶ Clean gaskets and the surfaces that they touch. Rub a thin coat of appliance polish or kitchen wax on the gaskets after cleaning.
	The door is reopened within a short time after having been opened.	▶ When you open the door, warmer air enters the refrigerator. As the warm air cools, it can create a vacuum. If the door is hard to open, wait 5 minutes to allow the air pressure to equalize, then see if it opens more easily.

TROUBLESHOOTING GUIDE

	Check if...	Then...
TEMPERATURE IS TOO WARM OR THERE IS INTERIOR MOISTURE BUILDUP	The air vents are blocked. Cold air circulates from the freezer to the fresh food section and back again through air vents in the wall dividing the two sections.	▶ Locate air vents by using your hand to sense airflow and move all packages that block vents and restrict airflow.
	The doors are opened often.	▶ When the door is opened, warm humid air is allowed into the refrigerator. The more the door is opened, the faster the humidity builds up, and the more warm air the refrigerator must cool. In order to keep the refrigerator cool, try to get everything you need out of the refrigerator at once, keep food organized so it is easy to find and close the door as soon as the food is removed.
	The control is not set correctly for the surrounding conditions.	▶ Refer to the **Setting the Controls** section on page 14. Wait 24 hours for temperatures to stabilize or even out. If the temperature is too cold or too warm, move the dial one number at a time.
	A large amount of food has just been added to the refrigerator or freezer.	▶ Adding food warms the refrigerator. It can take a few hours for the refrigerator to return to normal temperature.
	The food is not packaged correctly.	▶ Wrap food tightly and wipe off damp containers prior to storing in the refrigerator to avoid moisture accumulation. If necessary, repackage food according to the guidelines in the **Food Storage Guide** section on page 17.
	The doors are not closing completely.	▶ See **Doors will not close completely** on page 32.
	The weather is humid.	▶ In humid weather, air carries moisture into refrigerator when doors are opened.
	A self-defrost cycle was completed.	▶ It is normal for droplets to form on the back wall after the refrigerator self-defrosts.

MEMO



LG Electronics Inc.