FRIDGE-FREEZER

User's Guide

Please read this User's Guide carefully before operating and keep it handy for reference at all times.

(In the UK Only)

Important

The wires in this mains lead are coloured in accordance with the following code:

GREEN AND YELLOW:EARTH
BLUE:NEUTRAL
BROWN:LIVE

This appliance must be earthed

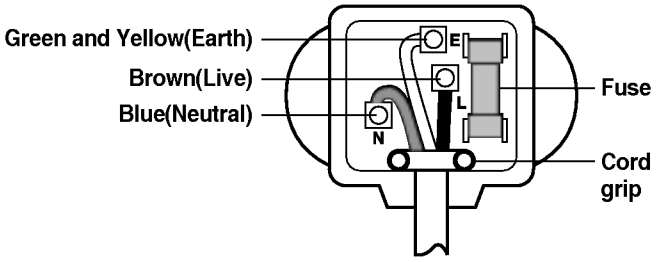

As the colours of the wires in the mains lead of this apparatus may not correspond with the coloured markings identifying the terminals in your plug, proceed as follows:

The wire which is coloured Green and Yellow must be connected to the terminal in the plug which is marked with the letter E or by the earth symbol(⏚) or coloured Green or Green and Yellow.

The wire which is coloured Blue must be connected to the terminal which is marked with the letter N or coloured Black.

The wire which is coloured Brown must be connected to the terminal which is marked with the letter L or coloured Red.

If a 13 amp(BS 1363) plug is used, fit a 13 amp BS 1362 fuse.

Table of Contents

Introduction	Registration	4
	Important Safety Instruction	4
	Identification of Parts	6
Installation	Installation	7
	Starting	7
Operation	Temperature Control	8
	Quick Freeze	8
	Vacation	9
	Self Test	9
	Door Alarm	9
	Ice Making	9
	Defrosting	9
	Water Dispenser	10
Suggestion On Food storage	Storing Food	12
Care and Maintenance	General Information	13
	Lamp Replacement	13
	Cleaning	14
Trouble Shooting	Trouble Shooting	16
To Reverse the Doors	To Reverse the Doors	18

Registration

Introduction

The model and serial number are found on the rear of this unit. This number is unique to this unit and not available to others. You should record requested information here and retain this guide as a permanent record of your purchase. Staple your receipt here.

Date of Purchase : _____

Dealer Purchased From : _____

Dealer Address : _____

Dealer Phone No. : _____

Model No. : _____

Serial No. : _____

Important Safety Instruction

Precaution

This fridge-freezer must be properly installed and located in accordance with the Installation Instruction before it is used.

Never unplug your fridge-freezer by pulling on the power cord. Always grip plug firmly and pull straight out from the outlet.

When moving your appliance away from the wall, be careful not to roll over or damage the power cord.

After your fridge-freezer is in operation, do not touch the cold surfaces in the freezer compartment, particularly when hands are damp or wet. Skin may adhere to these extremely cold surfaces.

Important Safety Instruction

Precaution

Pull out the power plug prior to cleaning the fridge-freezer.
Never damage, serverely bend, pull out, or twist the power cord because power cord damage may cause a fire or electronic shock.
Never place glass products in the freezer because they may be broken when their inner contents are frozen.

Do not modify or extend the Power Cord length

It will cause electric shock or fire.

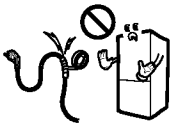

Don't Use an Extension Cord

If possible, connect the fridge-freezer to its own individual electrical outlet to prevent it and other appliances or household lights from causing an overload.

Accessibility of Supply Plug

The supply plug of the refrigerator-freezer should be placed in easy accessible position for quick disconnection in emergency.

Supply Cord Replacement

If the supply cord is damaged, it must be replaced by the manufacturer or its service agent or a similarly qualified person in order to avoid a hazard.

Danger

Risk of child entrapment.
Before you throw away your old refrigerator or freezer:
Take off the doors.
Leave the shelves in place so that children may not easily climb inside.

Don't store

Don't store or use gasoline or other flammable vapors and liquids in the vicinity of this or any other appliance.

Grounding (Earthing)

In the event of an electric short circuit, grounding (earthing) reduces the risk of electric shock by providing an escape wire for the electric current. In order to prevent possible electric shock, this appliance must be grounded. Improper use of the grounding plug can result in an electric shock. Consult a qualified electrician or service person if the grounding instructions are not completely understood, or if you have doubts on whether the appliance is properly grounded.

⚠Warning

- ⚠ Keep ventilation openings, in the appliance enclosure or in the built-in structure, clear of obstruction.
- ⚠ Do not use mechanical devices or other means to accelerate the defrosting process, other than those recommended by the manufacturer.
- ⚠ Do not damage the refrigerant circuit.
- ⚠ Do not use electrical appliances inside the food storage compartments of the appliance, unless they are of the type recommended by the manufacturer.
- ⚠ The refrigerant and insulation blowing gas used in the appliance require special disposal procedures. When disposal, please consult with service agent or a similarly qualified person.

Identification of Parts

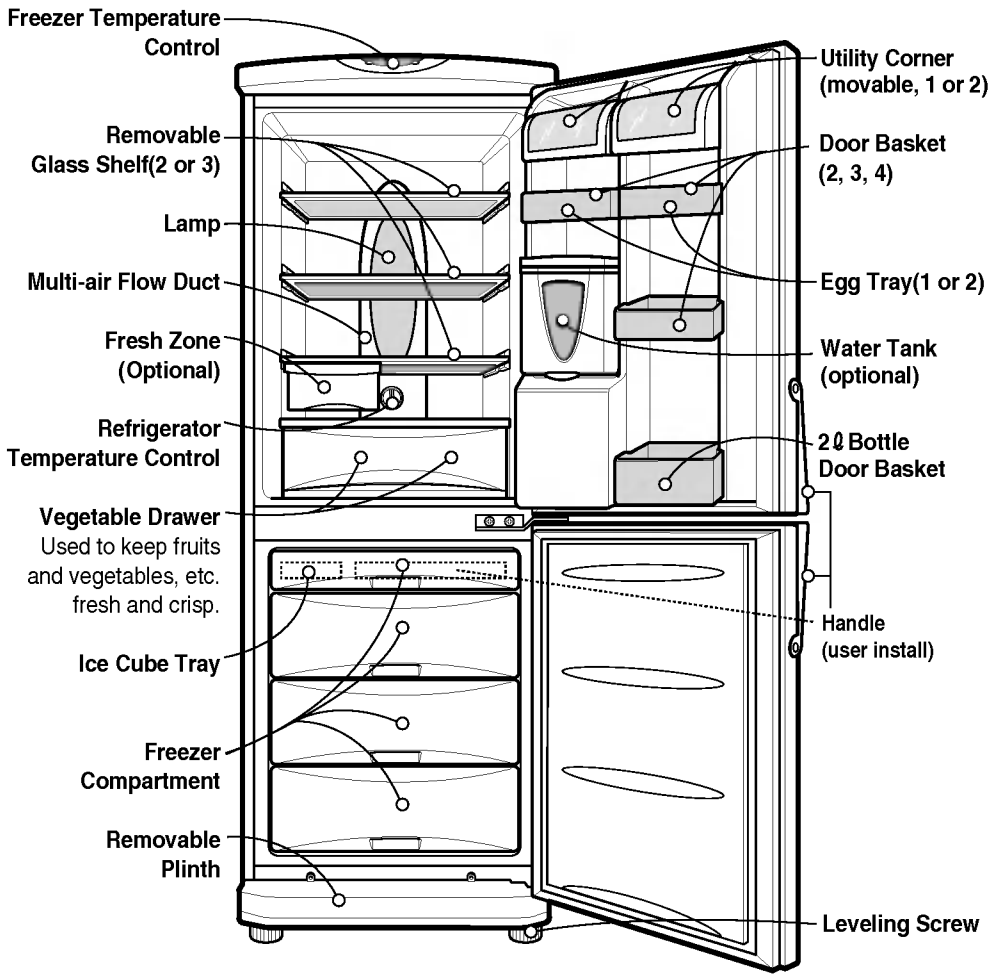

Note

If you found some parts missing from your unit, they may be parts only used in other models.

Installation

1. Select a good location.
   Place your fridge-freezer where it is easy to use.
2. Avoid placing the unit near heat sources, direct sunlight or moisture.
3. There must be proper air circulation around your fridge-freezer to keep it operating efficiently.
4. To avoid vibration, the unit must be leveled.
   If required, adjust the leveling screws to compensate for the uneven floor.
   The front should be slightly higher than the rear to aid in door closing.
   Leveling screws can be turned easily by tipping the cabinet slightly.
   Turn the leveling screws counterclockwise() to raise the unit, clockwise() to lower it.
5. Clean your fridge-freezer thoroughly and wipe off all dust accumulated during shipping.
6. Install accessories such as ice cube box, etc., in their proper places.They are packed together to prevent possible damage during shipment.
7. Connect the power supply cord (or plug) to the outlet. Don't double up with other appliances on the same outlet.
8. To ensure proper air circulation around the fridge - freezer, please maintain sufficient space on both the sides as well as top and maintain at least 2 inches (5 cm) from the rear wall.

Starting

When your fridge-freezer is installed, allow it 2-3 hours to stabilize at normal operating temperature prior to filling it with fresh or frozen foods.
If power plug is disconnected, allow 5 minutes delay before restarting.
Your fridge-freezer is now ready for use.

Temperature Control

Your fridge-freezer has two controls that let you regulate the temperature in the fridge and freezer compartments.

Fridge

- Initially set the TEMP. CONTROL at " 4" . Then adjust the compartment temperature according to your desire.

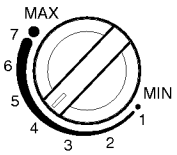

TEMP. CONTROL

- If you want an inside temperature slightly less cold or colder, turn the knob towards MIN or MAX, respectively. When the surrounding temperature is low, adjust the TEMP. CONTROL 'MIN'.

Freezer

- Freezer temperature control is on the top of the fridge-freezer. Initially set the Freeze Temp at mid-point. By pressing the Freezer Temp button, you can adjust the temperature of the Freezer as indicated by the numbers of lamps lit.(the setting is composed of five steps, 5 lamps lit indicates coldest.)

- When you starting the Fridge-Freezer or connecting the power plug to the outlet, temperature setting is automatically set to the mid-point.

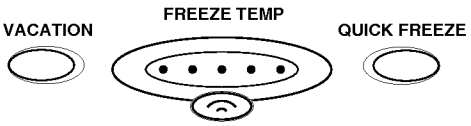

Quick Freeze

- This function is used when you want to freeze the foods quickly. Press the 'QUICK FREEZE' button once, and then the quick freeze operation starts with the lamp lit.
The quick freeze operation takes about 3 hours.
When its operation ends, it automatically returns to the normal state.
If you want to stop the quick freeze operation, press the 'QUICK FREEZE' button once more, the lamp goes out, and the quick freeze operation stops and the refrigerator returns to the normal state.

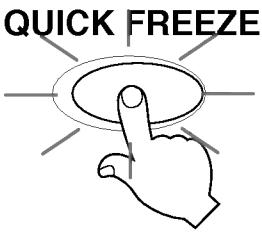

Vacation

This function makes the fridge-freezer work in a power saving mode which is useful for when you are away on holiday, by reducing energey consumption as much as possible. Pressing 'VACATION' starts operation with lamp ON and pressing it again stops the operation.
For better functioning, you should set the TEMP. CONTROL to " MIN" .



Self Test

This function allows you to check for operational problems. If you think you have a problem with your fridge-freezer, then press the temperature control button:
- If the indicate lights move up or down, then there is no problem with your fridge-freezer.
- If the indicate lights do not move up or down, then please leave the power connected and call your nearest service agent.

Door Alarm

When the door of the fridge is left opened for a while, the alarm sounds.

Ice Making

- To make ice cubes, fill the ice tray to the water level and place it in the freezer.
- If ice cubes are required fast, press the 'QUICK FREEZE' button.
- To remove ice cubes, hold the tray at its ends and twist gently.

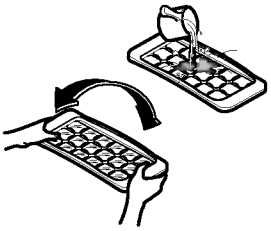

Tip

To remove ice cubes easily, run water on the tray before twisting.

Defrosting

Defrosting takes place automatically.
The defrosting water flows down to the evaporating tray and is evaporated automatically.

Water Dispenser (optional)

Features

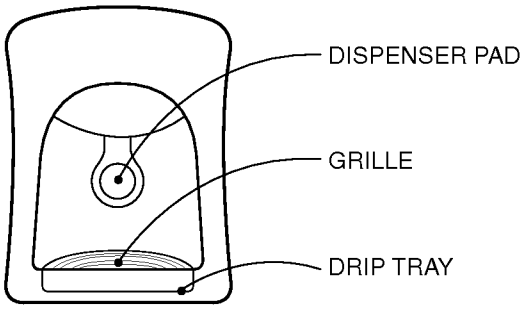

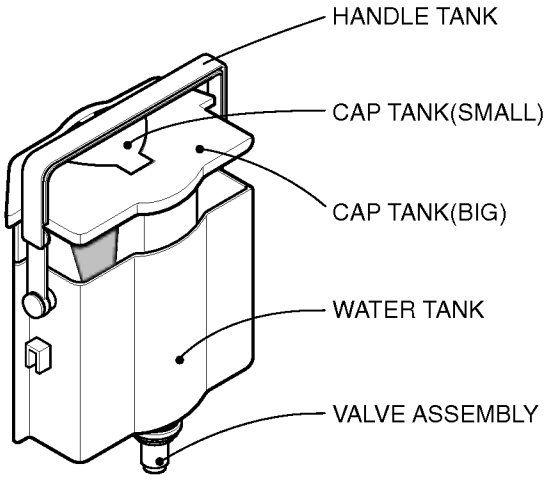

Install

Please assemble the VALVE ASSEMBLY after correctly adjusting it with a DOOR HOLE.

Filling of WATER TANK

1. After turning the HANDLE Tank backward with the WATER TANK installed at the DOOR, Open the CAP TANK (SMALL) and then fill water using a kettle etc.
   * Fill water while watching a sight glass on the front of the WATER TANK.
   * Water up to 4.5ℓ can be filled.
2. Press and fix the CAP TANK(SMALL).
3. After filling spring water, fix the HANDLE TANK at a proper position.

Drinking

1. Press the Dispenser Pad with a cup.
2. . If pressing the Pad, water inside of the Dispenser is supplied.
3. If slowly removing a cup from the Pad, water will not fall down.

Caution

Do not use other beverage (milk, juice, carbonated beverage etc) than spring water. Especially beverage including grain must not be used (may result in failure).

Storing Food

- Do not store food which goes bad easily at low temperature, such as banana, and melon.
- Allow hot food to cool prior to storing. Placing hot food in the fridge-freezer could spoil other food, and lead to higher electric bills.
- When storing the food, use a container with a lid. This prevents moisture from evaporating, and helps food to keep its taste and nutrients.
- Do not block air vents with food. Smooth circulation of cold air keeps fridge-freezer temperature even.
- Do not open the door frequently. Opening the door lets warm air enter the fridge-freezer, and cause temperature to rise.
- To adjust the temperature control easily, do not store food near the temperature control dial.
- Never keep too many foods in door rack, as this may stop the door from fully closing.
- Do not store bottles in the freezer compartment - they may break when frozen.
- Do not refreeze food that has been thawed. This causes loss of taste and nutrition.

Note

If you keep the fridge-freezer in a hot, and humid place, frequently open its door or put a lot of vegetables in it, dew may form in it, which has no effect on its performance.
Remove the dew with dust cloth free from care.

General Information

Power Failure

- 1~2 hour power failure does no harm to the foods stores. Try to avoid opening and closing the door too frequently.

If You Move

- Take out foods from the fridge-freezer and firmly fix the loose items with tape.
- Turn the leveling screws until they stop before moving the fridge-freezer. Otherwise the screw may scratch the floor or the fridge-freezer cannot move.

Anti Condensation Pipe

- The Anti-Condensation pipe is installed around the front side of fridge-freezer as well as on the partition between fridge compartment and freezer compartment to prevent dewing.

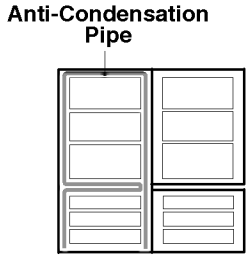

- Especially after installation or when ambient temperature is high, the fridge-freezer may feel hot, which is quite normal.

Lamp Replacement

1. Unplug the power cord from the outlet.
2. Remove fridge shelves.
3. To remove the lamp cover, insert ⊖ type driver in the underside of the lamp cover and pull it out forwards.
4. Turn the lamp counterclockwise.
5. Assemble in reverse order of disassembly.
   Replacement lamp must be the same specification as original.
   - You must check the O-RING, which is made by rubber and prevent electric spark.

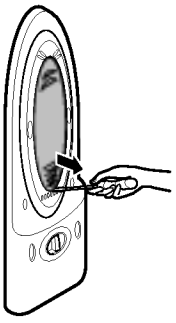

Cleaning

Before Cleaning

Be sure to unplug the power.

Exterior

Clean the outside of the fridge-freezer with a soft cloth soaked with hot water or liquid detergent. If you use a detergent, be sure to wipe it with a clean wet cloth.

Interior

As above.

After Cleaning

Check that the power cord is not damaged, power plug has not overheated, and that the power plug is tightly inserted into the outlet.

⚠ Warning

Be sure to dry the appliance with a cloth after washing it with water.
Do not use abrasive, petroleum, benzene, thinner, hydrochloride acid, boiling water, rough brush, etc, as they may damage parts of the fridge-freezer.

GRILLE and DRIP TRAY

1. After removing the HOLE part of the GRILLE with the finger, slowly pull the DRIP TRAY out.
2. After discharging Drip Water inside of the DRIP TRAY, clean and fully rinse the GRILLE and the DRIP TRAY.
3. Wipe moisture out around the DOOR part and the DRIP TRAY using a clean cloth.

Exterior Dispenser

Wipe moisture etc out outside of Dispenser and on the Dispenser Pad using a cloth.

Water Tank

1. Lift the WATER TANK up by pressing the fixing LEVER on the bottom of WATER TANK and then remove it.
2. After removing the CAP TANK (BIG), clean and fully rinse the inside/outside part of the WATER TANK by using neutral cleansing agent.

Cap Tank(Big & Small)

Clean and fully rinse the Cap Tank (Big & Small) by using neutral cleansing agent.

Especially for the groove part of the CAP TANK, it is convenient to cleanse it by using a small brush.

Valve Assembly

Clean and fully rinse the VALVE ASSEMBLY by using a small brush. Rinse it while operating the bottom part of the valve assembly. Always fix the Sealing Rubber separated for cleansing at the existing position (may result in water leakage).

Before calling for service, check this list.
It may save you both time and expense.
This list includes common occurrences that are not the result of defective workmanship or materials in this appliance.

Problem	Possible Causes
Fridge-Freezer does not operate	• Power plug may be unplugged from the electric outlet. Plug it in securely. • House fuse has blown or circuit breaker has tripped. Check and/or replace fuse and reset circuit breaker. • Power cut. Check house lights.
Fridge or Freezer Compartment Temperature too warm	• Temperature control not set on proper position. Refer to Temperature Control section. • Appliance is placed close to heat source. • Warm weather-frequent door openings. • Door left open for a long time. • Package holding door open or blocking air duct in freezer compartment.
Vibration or Rattling or Abnormal Noise	• The floor on which the fridge-freezer is installed may be uneven or the fridge-freezer may be unstable. Make it even by rotating the leveling screw. • Unnecessary objects placed in the back side of the fridge-freezer.
Frost or Ice Crystals on frozen Food	• Door may have been left ajar or package holding door open. • Too frequent or too long door openings. • Frost within package is normal.
Moisture forms on Cabinet Surface	• This phenomenon is likely to occur in a wet space. Wipe it with a dry towel.

Problem	Possible Causes
Moisture collects inside	• Too frequent or too long door openings. • In humid weather, air carries moisture into fridge when doors are opened.
Fridge has odor	• Foods with strong odors should be tightly covered or wrapped. • Check for spoiled food. • Interior needs cleaning. Refer to CLEANING section
Door not closing properly	• Food package is keeping door open. Move packages that keep door from closing. • Fridge-freezer is not level. Adjust the leveling screws. • The floor on which the fridge-freezer is installed may be uneven or the fridge-freezer may be unstable. Slightly raise the front side with the leveling screw.
Interior light does not work	• No power at outlet. • Light lamp needs replacing. Refer to the Lamp Replacement section

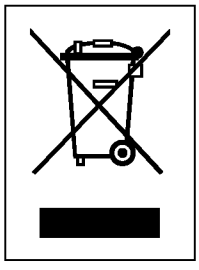

DISPOSAL OF YOUR OLD APPLIANCE

1. When this crossed-out wheeled bin symbol is attached to a product it means the product is covered by the European Directive 2002/96/EC.
2. All electrical and electronic products should be disposed of separately from the municipal waste stream via designated collection facilities appointed by the government or the local authorities.
3. The correct disposal of your old appliance will help prevent potential negative consequences for the environment and human health.
4. For more detailed information about disposal of your old appliance, please contact your city office, waste disposal service or the shop where you purchased the product.

To Reverse the Doors

Your fridge-freezer is designed with reversible doors, so that they may open from either the left of right hand side to suit your kitchen design.

Precaution

1. Before reversing the door, first of all, you should take out food and accessories like shelves or trays which are not fixed in the fridge-freezer.
2. Use Torque Wrench or Spanner to fix or remove the bolt.
3. Do not lay the fridge-freezer down. This will cause problems.
4. Be careful not to drop the doors in disassembling or assembling.

How to Reverse the Doors

1. Remove SCREWS ❸ after removing a CAP ❷ from the right part of the refrigerator room HANDLE ❶. Remove 2 SCREWS ❸ on the bottom part of the refrigerator room HANDLE ❶. The freezer room HANDLE ❺ may be also separated in the same sequence as in the refrigerator room HANDLE ❶.

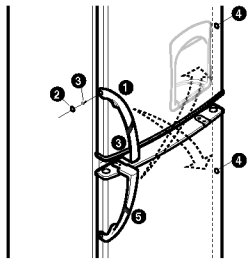

2. Remove screw ❼ and remove Cover ❻ and move Cap Cover ❽. And, remove screw ❾, Hinge-L ❿, and remove pin ⓫. Remove the Freezer Door ㉖, and move the position of the cap ⓬. Move the position of bracket door ⓭ and screw ⓮.

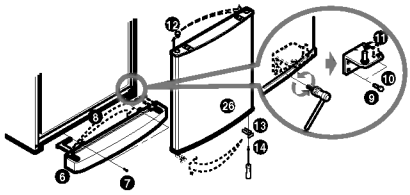

3. Remove bolt ⓯ and remove the Hinge-C ⓰ and the Fridge Door ⓱. Move the position of the cap ⓲. Move the position of bracket door ㉒ and screw ㉑.

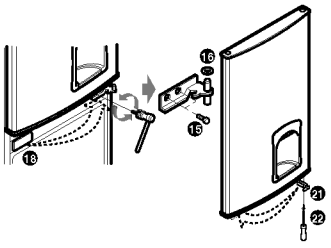

4. Move the position of Hinge-U pin ⑲, and Cap, Top cover ⑳ Assemble the Fridge Door ⑰ Assemble Hinge-C ⑯ and bolt ⑮ Assemble F-Door㉖. Assemble the Hinge-L ⑩ and bolt ⑨. Assemble Low Cover ❻ and screw ❼.

5. Install HANDLES ❺ installed at the existing freezer room, at the refrigerator room. Adjust the bottom part of HANDLES to the groove and then fasten 2 screws ❸ after removing the CAP㉗. After bolting SCREWS in the side of the refrigerator room DOOR, press and insert the CAP ❷. Insert the CAP ❹ to hole which the HANDLE ❶ was installed previous. The freezer room HANDLES ❶ are assembled in the same manner as above using the existing.

6. Stop the groom where the existing HANDLE ❶, ❺ was installed at by using the CAP㉗ removed in the initial installation.

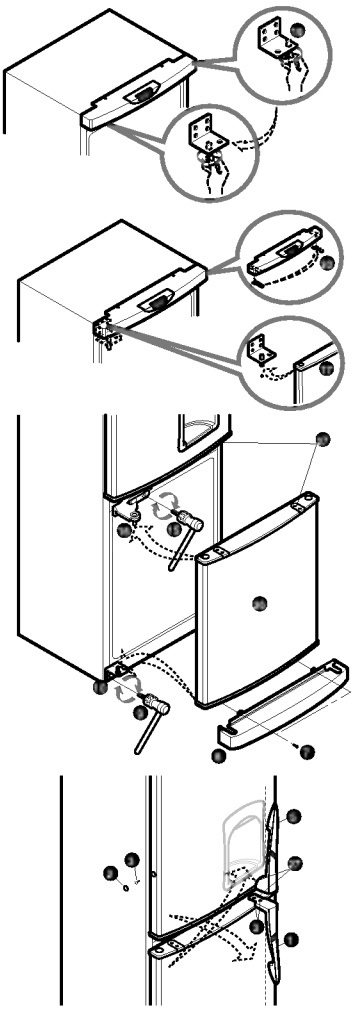

Note

Reversing the doors is not covered by the warranty.



P/No. MFL31177102