Model	CK3		
Language	ENGLISH		
Page	16 PAGE	Color(cover/body)	2/2
Material	Weight 100G	Size(W*H)	190*260
Date	2007.02.14	Designer	YUSONG
Part No.	MFL32930818	Description	MANUAL, OWNERS

Chage Record

No.	Change content	ECO No.	Date	Designer	Confirm
△1					
△2					
△3					
△4					
△5					
△6					
△7					
△8					
△9					

OWNER'S MANUAL

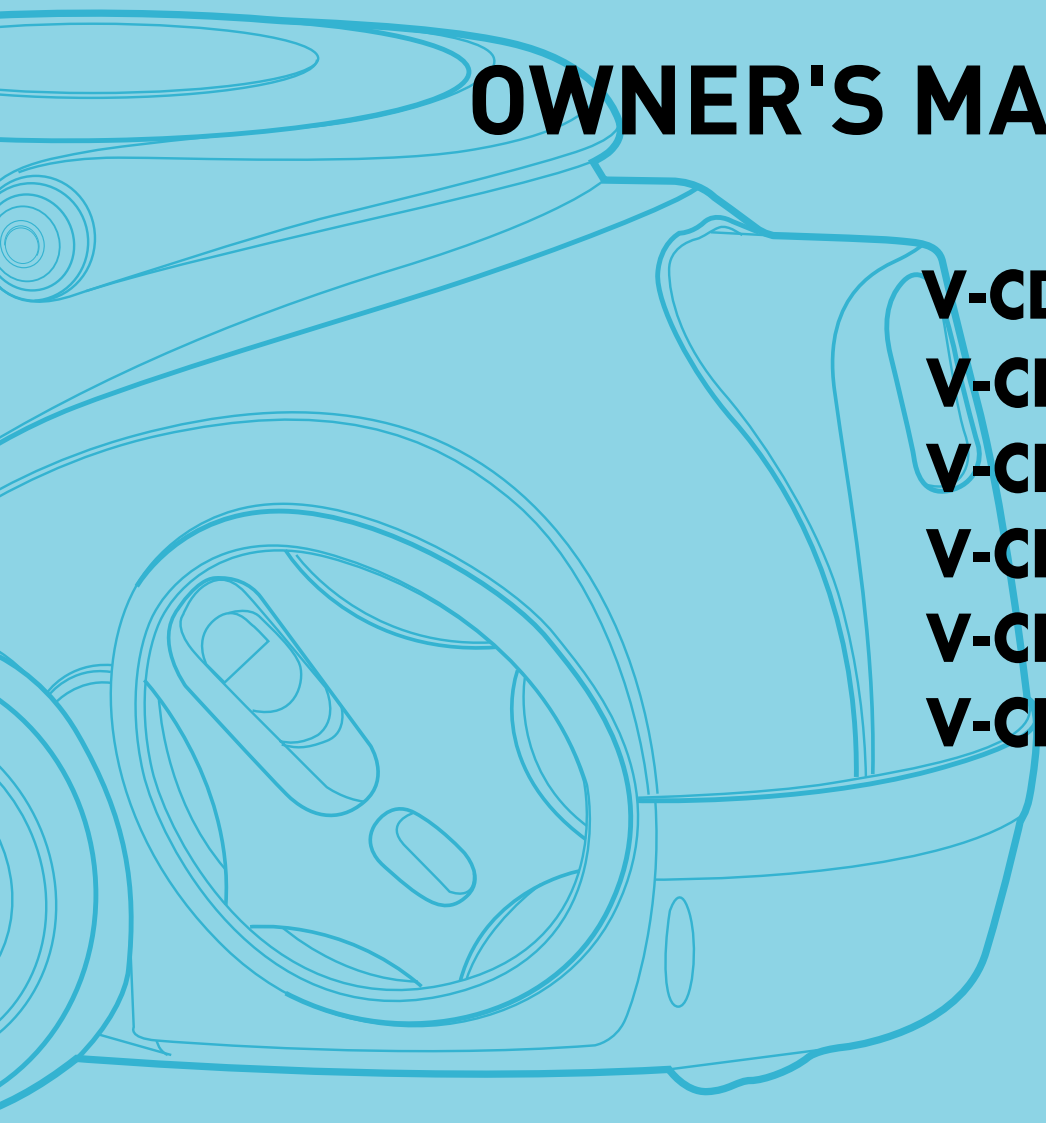

V-CD271NT*
V-CD271HT*
V-CD281NT*
V-CD281HT*
V-CD201NT*
V-CD201HT*

Bagless vacuum cleaner

LG

Table of contents

Safety Information.....3

How to Use.....4

Assembling cleaner 4

Using the cleaning head and Accessory Nozzles.....6

Emptying the Dust Chamber 8

Operating the cleaner.....9

Cleaning the Filter 10

Cleaning the Exhaust Filter.....11

User's Guide For Turbine Nozzle(Option) 12

Troubleshooting.....13

Safety Information

Please read the following information, which contains important instructions for the use and maintenance of the appliance.
This appliance complies with the following EC Directives: -73/23/EEC, 93/68/EEC-Low Voltage Directive-89/336EEC -EMC Directive.

- ❏ The appliance is not intended for use by young children or infirm persons without supervision.
- ❏ Young Children should be supervised to ensure that they do not play with appliance.
- ❏ If the appliance is supplied from a cord extension set or an electrical portable outlet device, the cord extension set on electrical portable outlet device must be positioned so that it is not subject to splashing or ingress of moisture.
- ❏ Do not use the appliance if the power cord is damaged or faulty.
- ❏ If the power cord is damaged, it must be replaced by an approved LG Electronics Service Centre.
- ❏ Always switch the vacuum cleaner off before:
  - Emptying the dust chamber.
  - Cleaning or changing the filters.
- ❏ Do not vacuum flammable or explosive substances(liquids or gases).
- ❏ Do not vacuum hot ash, embers etc. nor sharp objects.
- ❏ Do not vacuum water or other liquids.
- ❏ Do not unplug by pulling on cord.
- ❏ Use only LG's recommended filters.
- ❏ When you vacuum with an attachment appliance that has a rotating brush roller:
  - Do not reach into the running brush roller.
- ❏ The application is not intended for use by young children or infirm persons without supervision.

Thermal protector: This vacuum cleaner has a special thermostat that protects the cleaner in case of motor overheating. If the cleaner suddenly shuts off, turn off the switch and unplug the cleaner. Check the cleaner for a possible source of overheating such as a full dust chamber, a blocked hose or clogged filter. If blockage or obstruction is located, remove and wait at least 30 minutes before attempting to use the cleaner. After the 30 minutes period, plug the cleaner back in and turn on the switch. If the cleaner still does not run, please contact your approved LG service centre.

How to Use Assembling Cleaner

Fit the large cleaning head into the end of the tube.

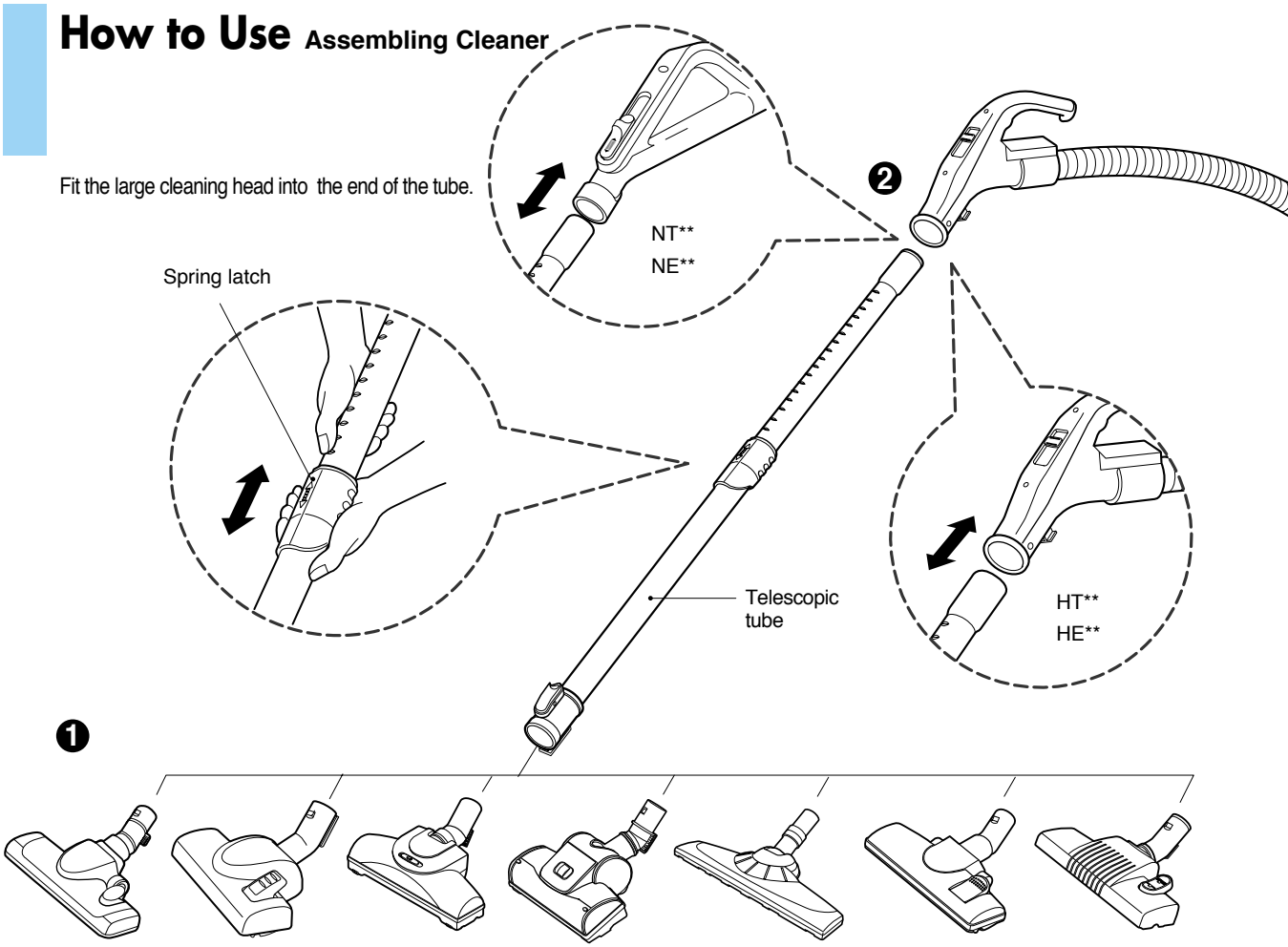

❶ The 2 position head

Push telescopic tube into nozzle outlet.

❷ Telescopic tube (depending on model)

- Press the spring latch to release.
- Pull out the tube to the desired length.
- Release spring latch to lock the tube in position.
- Push telescopic tube into hose handle firmly.

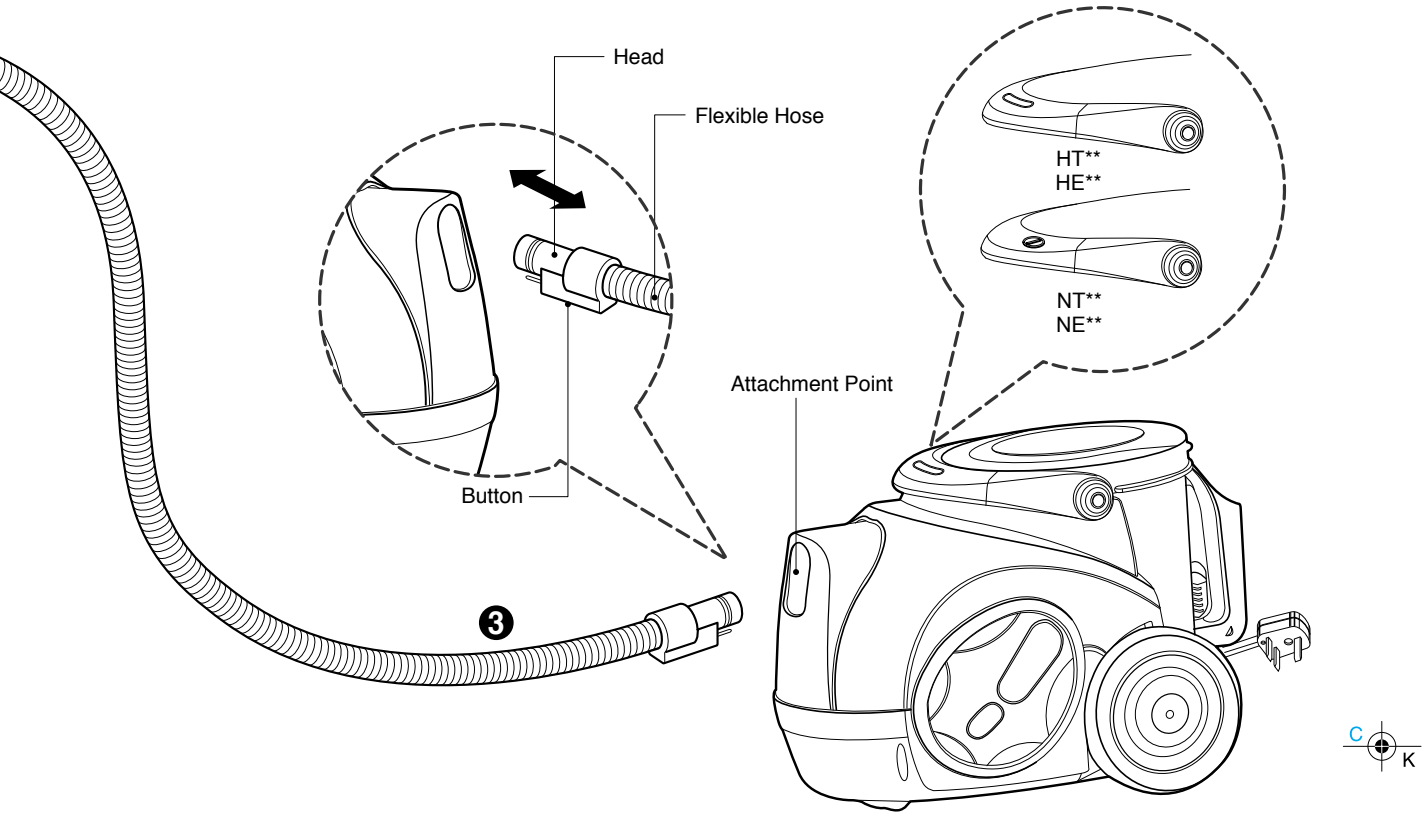

❸ Connecting the flexible hose

- Push the end of the head on the flexible hose into the attachment point on the vacuum cleaner.
- To remove the flexible hose from the vacuum cleaner, press on the button situated on the head, then pull the head out of the vacuum cleaner.

⚠ CAUTION

- Suction power may be weakened when insignificant dusts are sucked. In this case, clean the filter.
- Make the dust box empty if dusts are filled to the maximum degree and then clean the filter when it becomes 5 times.

How to Use Using the cleaning head and Accessory Nozzles

Tear the vinyl bag and pull out accessories. Attach the accessory holder onto the telescopic tube.
And then, fit the Dusting Brush, Crevice Tool and Upholstery Nozzle onto the accessory holder. Fit the accessory onto the hose.

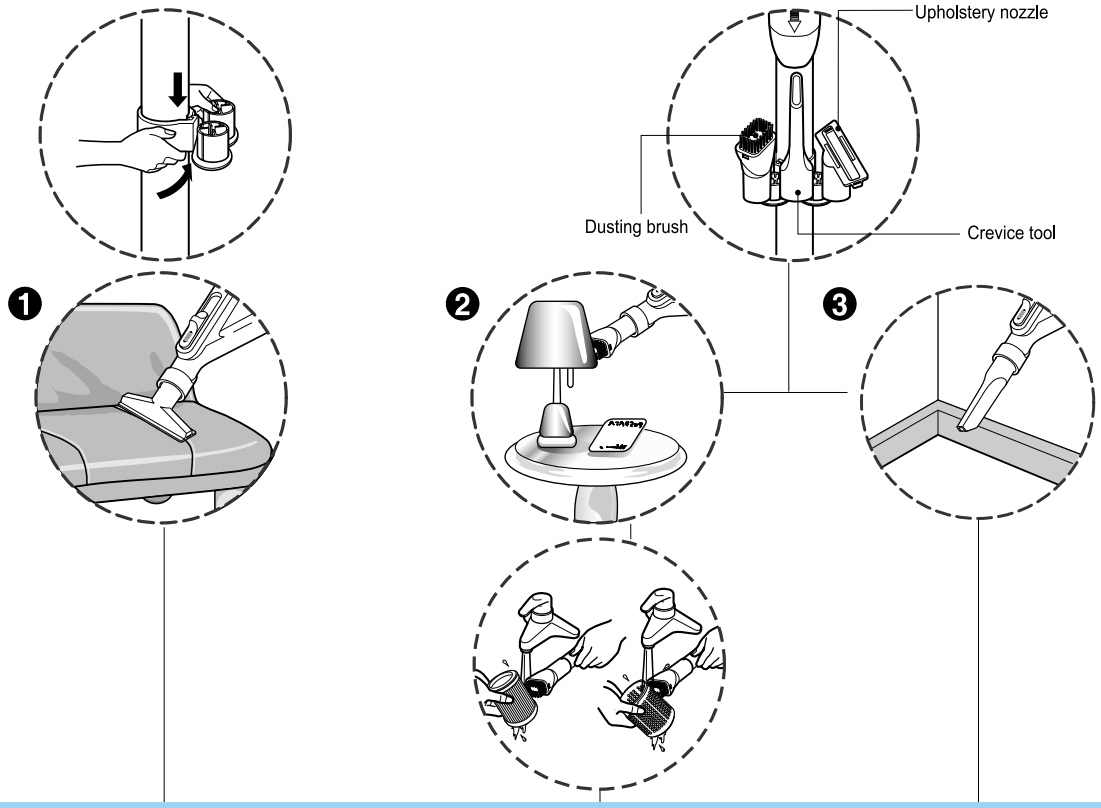

❶ Upholstery Nozzle

Upholstery Nozzle is for vacuuming upholstery, mattresses, etc.
The thread collectors help to pick up the threads and fluff.

❷ Dusting Brush

Dusting Brush is for vacuuming picture frames, furniture frames, books and other irregular surfaces.
Dusting Brush is also used for cleaning Filters.

❸ Crevice Tool

Crevice Tool is for vacuuming in those normally hard-to-reach places such as reaching cobwebs, or between the cushions of a sofa.

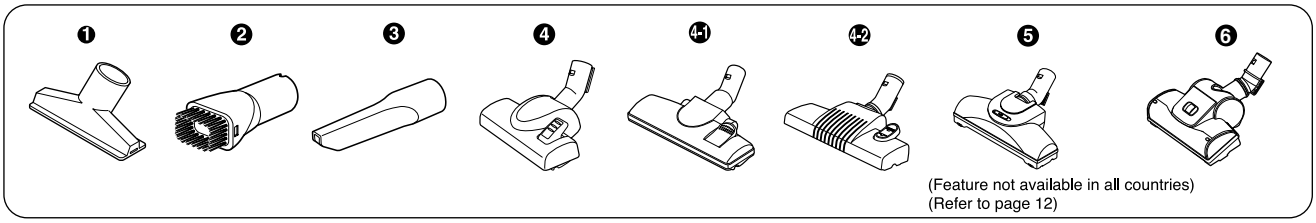

(Feature not available in all countries)
(Refer to page 12)

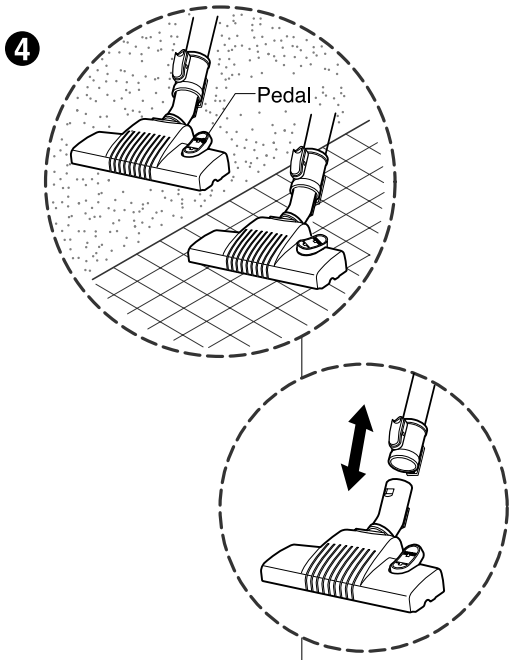

❹ The 2 position head (Depending on model)

- **The 2 position cleaning head** equipped with a pedal which allows you to alter its position according to the type of floor to be cleaned.
- **Hard floor position** **(tiles, parquets floor)** Press the pedal to lower brush.
- **Carpet or rug position** Press the pedal to lift the brush up.

How to Use Emptying the dust chamber

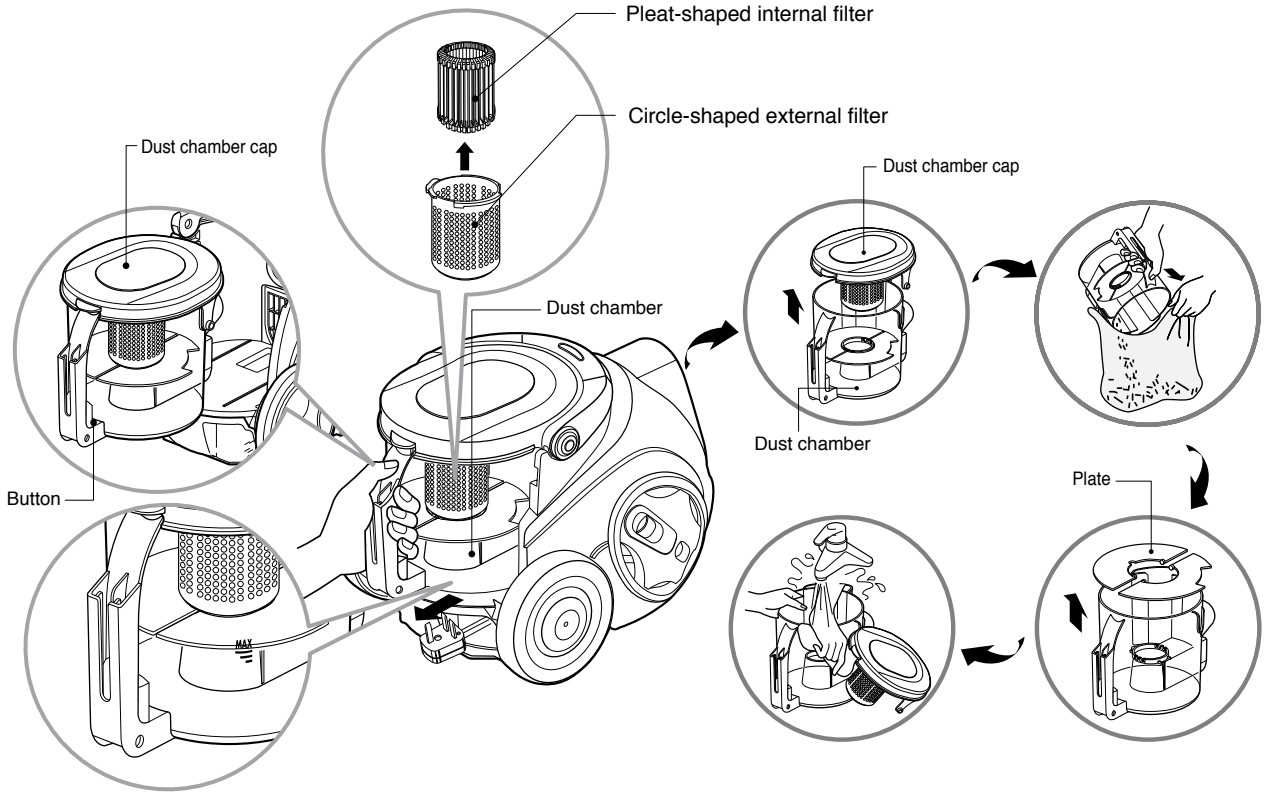

Suction power may be weakened when insignificant dusts are sucked. In this case, clean the filter.

- Turn off the vacuum cleaner and unplug it.
- Your vacuum cleaner is equipped with both a dust chamber and a motor filters.
  Press the button and pull the dust chamber forward.
  Remove the dust chamber cap.
  Clean the pleat-shaped and the clrcle-shaped filters.
- To reinstall the dust chamber, replace the dust chamber cap and push the dust chamber into the tank mount as far as it will go.
- Open the dust chamber cap.
- Remove two plates from the dust chamber.
- Wash both parts with softcloth. Gently rinse both parts under cold running water.

How to Use Operating the cleaner

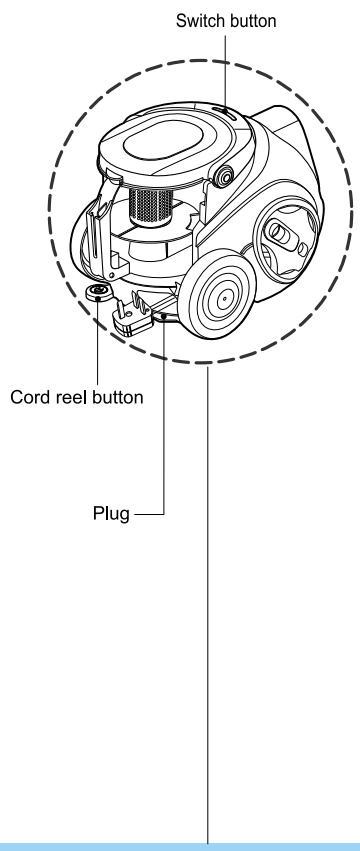

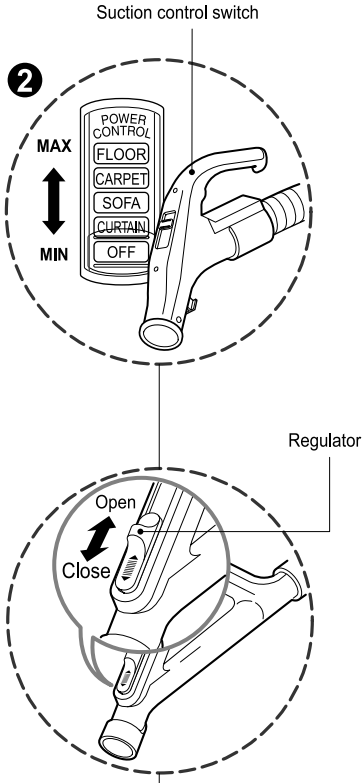

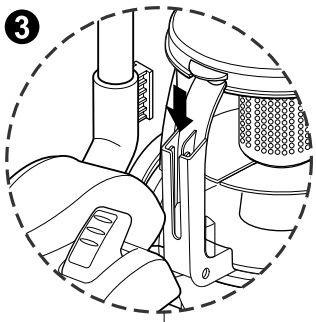

❶ How to Plug in and Use

- Pull out the power cord to the desired length and plug into the socket.
- Push the suction control switch of the hose handle in the direction of the position what you want. (depending on model)
- To stop it, push down the suction control switch in the direction of OFF. (depending on model)
- Press switch button to start the vacuum cleaner. (depending on model)
- To stop it, press the switch button again. (depending on model)
- Press the cord reel button to retract the power cord after use.

❷ Adjusting the Suction level(depending on model)

- Adjust suction with the suction control switch in the hose handle. (depending on model)
- The flexible hose handle has a manual air flow regulator which allows you to adjust the suction level briefly. (depending on model)

❸ Park System

- To store after vacuuming and pause while vacuuming.
- For deposit after vacuuming, for example to move a small piece of furniture or a rug, use the Park system to support the flexible hose and cleaning head.
  - Slide the hook on the large cleaning head into the slot on the rear of the dust chamber.

How to Use Cleaning the Filter

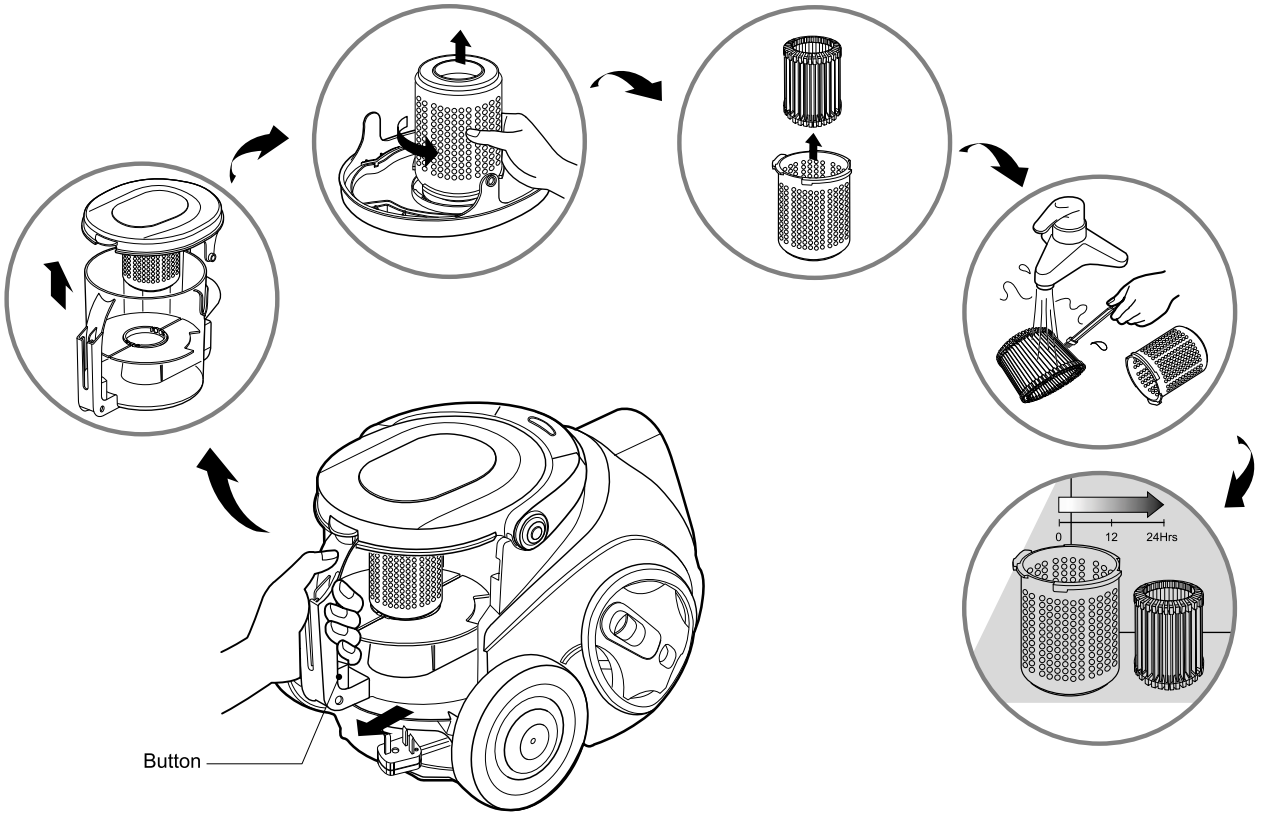

The reusable filters are situated under the dust chamber cap and you can use it permanently.

- Press the button and pull the dust chamber forward.
- Open the dust chamber cap.
- Remove the filters by rotating it counter-clockwise.
- **Clean the filters with the dusting brush under cold running water.**
- **Allow the filters to dry in a shaded location for a day.**
- Make the dust chamber empty if dusts are filled to the maximum degree and then clean the filter.

⚠ WARNING!

Gently rinse both parts separately under a cold running water until the water runs clear. **Do not use detergent or a washing machine or dishwasher.**
Shake off excess water from the filter.
Do not tumble/spindry, microwave or place in oven or on direct heat.
Ensure the filter is completely dry.
Re-assemble and place it back in your machine, filter frame.
If the filter is damaged, do not place them in the machine.
Please call the Helpline.
Do not use the net-shaped filter seperately.

How to Use Cleaning the Exhaust Filter

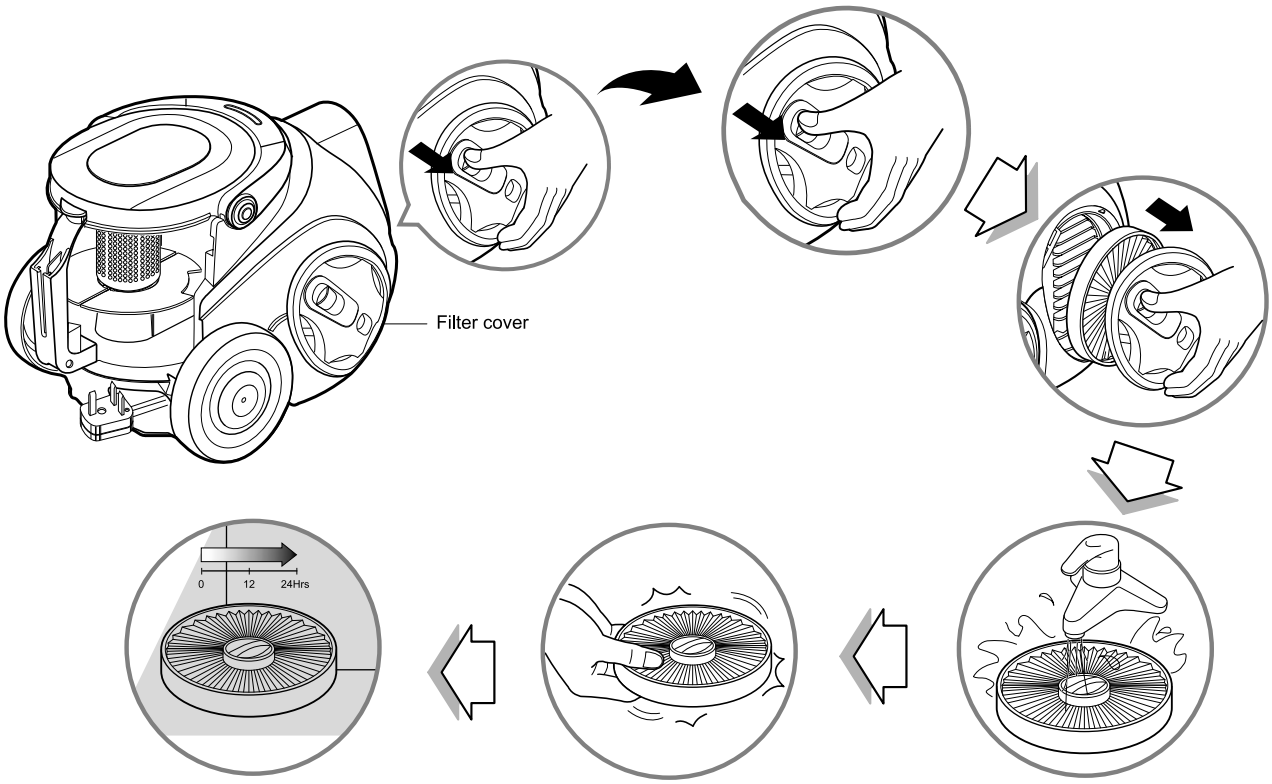

- The exhaust filter is a washable and reusable HEPA filter.
- To change the exhaust filter, remove the filter cover on the body by release hook.
- Pull out the exhaust filter.
- Clean it with cold, running water.
  Do Not use the brush
  - Using the brush will cause permanent damage and allow dust to bypass the filter.
- Allow exhaust filter to dry in a shaded location for a dry.
- The exhaust filter should be cleaned at least once a year.

User's Guide for Turbine Nozzle

(Feature not available in all countries)

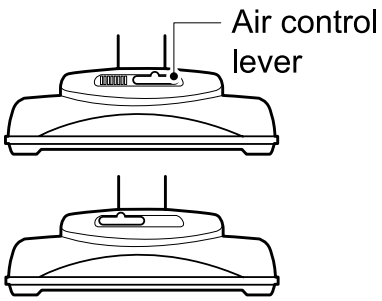

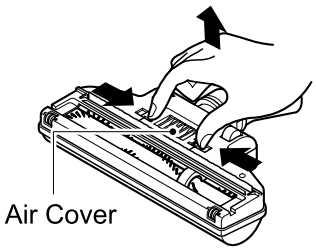

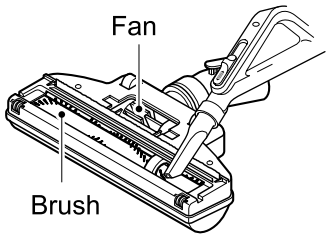

❶ Turbine brush nozzle

Air adjustment

Slide the air control lever to the right for long pile carpet and to the left for short pile carpet.

Cleaning turbine brush nozzle

Press the button on the rear side of the nozzle to separate the air cover.

Use the dusting brush & crevice tool to vacuum clean the brush and fan.

Troubleshooting

What to Do When Suction Performance Decreases

- Turn off the vacuum cleaner and unplug it.
- Check the telecsopic tube, flexible hose and cleaning tool for blockages or obstructions.
- Check that the dust chamber is not full. Empty if necessary.
- Check that the motor filter light is not on. Clean the motor filter, if necessary.
- Check that the exhaust filter is not blocked. Clean the exhaust filter, if necessary.
- If you are still experiencing problems, please contact your local service centre.
  To locate your nearest service centre you can visit our web site www.lge.com.au

Notes

Notes

C K



LG Electronics Inc.

P/No.: MFL32930818