LG

DVD RECEIVER
OWNER'S MANUAL

MODEL: HT902PB

Main Unit - HT902PB-D0
Speakers - SH92PB-F
SH92PB-C
SH92PB-S
SH92PB-W

Before connecting, operating or adjusting this product, please read this instruction booklet carefully and completely.

FOR THE WARRANTY TERMS & CONDITIONS, PLEASE REFER TO BACK COVER OF THIS MANUAL.

CAUTION
RISK OF ELECTRIC SHOCK DO NOT OPEN

CAUTION: TO REDUCE THE RISK OF ELECTRIC SHOCK DO NOT REMOVE COVER (OR BACK) NO USER-SERVICEABLE PARTS INSIDE REFER SERVICING TO QUALIFIED SERVICE PERSONNEL.

This lightning flash with arrowhead symbol within an equilateral triangle is intended to alert the user to the presence of uninsulated dangerous voltage within the product's enclosure that may be of sufficient magnitude to constitute a risk of electric shock to persons.

The exclamation point within an equilateral triangle is intended to alert the user to the presence of important operating and maintenance (servicing) instructions in the literature accompanying the product.

WARNING: TO PREVENT FIRE OR ELECTRIC SHOCK HAZARD, DO NOT EXPOSE THIS PRODUCT TO RAIN OR MOISTURE.

WARNING: Do not install this equipment in a confined space such as a book case or similar unit.

CAUTION: Do not block any ventilation openings. Install in accordance with the manufacturer's instructions.

Slots and openings in the cabinet are provided for ventilation and to ensure reliable operation of the product and to protect it from overheating.
The openings should be never be blocked by placing the product on a bed, sofa, rug or other similar surface. This product should not be placed in a built-in installation such as a bookcase or rack unless proper ventilation is provided or the manufacturer's instruction have been adhered to.

CLASS 1 LASER PRODUCT
KLASSE 1 LASER PRODUKT
LUOKAN 1 LASER LAITE
KLASS 1 LASER APPARAT
CLASSE 1 PRODUIT LASER

CAUTION:
This product employs a Laser System.
To ensure proper use of this product, please read this owner's manual carefully and retain it for future reference. Should the unit require maintenance, contact an authorized service center.
Use of controls, adjustments or the performance of procedures other than those specified herein may result in hazardous radiation exposure.
To prevent direct exposure to laser beam, do not try to open the enclosure. Visible laser radiation when open. DO NOT STARE INTO BEAM.

CAUTION: The apparatus should not be exposed to water (dripping or splashing) and no objects filled with liquids, such as vases, should be placed on the apparatus.

CAUTION concerning the Power Cord

Most appliances recommend they be placed upon a dedicated circuit;
That is, a single outlet circuit which powers only that appliance and has no additional outlets or branch circuits. Check the specification page of this owner's manual to be certain.

Do not overload wall outlets. Overloaded wall outlets, loose or damaged wall outlets, extension cords, frayed power cords, or damaged or cracked wire insulation are dangerous. Any of these conditions could result in electric shock or fire. Periodically examine the cord of your appliance, and if its appearance indicates damage or deterioration, unplug it, discontinue use of the appliance, and have the cord replaced with an exact replacement part by an authorized servicer.

Protect the power cord from physical or mechanical abuse, such as being twisted, kinked, pinched, closed in a door, or walked upon. Pay particular attention to plugs, wall outlets, and the point where the cord exits the appliance.

To disconnect power from the mains, pull out the mains cord plug. When installing the product, ensure that the plug is easily accessible.

POWER: This unit operates on a mains supply of 200-240V, 50/60Hz.

WIRING: This unit is supplied with a BSI 1363 approved 13 amp mains plug, fused at 5 amp. When replacing the fuse always use a 5 amp BS 1362, BSI or ASTA approved type. Never use this plug with the fuse cover omitted. To obtain a replacement fuse cover contact your dealer. If the type of plug supplied is not suitable for the mains sockets in your home, then the plug should be removed and a suitable type fitted. Please refer to the wiring instructions below:

WARNING: A mains plug removed from the mains lead of this DVD player must be destroyed. A mains plug with bared wires is hazardous if inserted in a mains socket.
Do not connect either wire to the earth pin, marked with the letter E or with the earth symbol ⏚ or coloured green or green and yellow.
If any other plug is fitted, use a 5 amp fuse, either in the plug, or at the distribution board.

IMPORTANT: The wires in this mains lead are coloured in accordance with the following codes:
- BLUE: NEUTRAL, BROWN: LIVE - As the colours of the wires in the mains lead of this DVD player may not correspond with the coloured marking identifying the terminals in your plug, proceed as follows: The wire which is coloured blue must be connected to the terminal which is marked with the letter N or coloured black. The wire which is coloured brown must be connected to the terminal which is marked with the letter L or coloured red.

Introduction

Maintenance and Service 3
Before use 4
Front Panel/Rear Panel 5
Remote Control 6

Installation and Setup

TV Connection 7
Optional Equipment Connection 8
Antenna Connection 8
Assembling and Connecting to the Speakers .9
Speaker System Connection 9
HDMI Connection 10
Displaying Disc Information on-screen 11
Initial Settings 11
General Operation 11-14
LANGUAGE 11
DISPLAY 12
AUDIO 13
5.1 Speaker Setup 13
LOCK (Parental Control) 14
OTHERS 14

Operation

General features 15
Additional features 16
Controlling the TV 16
Playing an Audio CD or MP3/WMA file 17
Programmed Playback 17
Viewing a JPEG file 18
Playing a DivX Movie file 19
Presetting the Radio Stations 20
Listening to the Radio 20
RDS Operation 21
Sleep Timer Setting 22
Dimmer 22
Mute 22
Selecting input source 22
XTS/XTS pro 22
VIRTUAL sound 22
Sound Mode 22

Reference

Language Codes 23
Area Codes 23
Troubleshooting 24-25
Specifications 26

This product is manufactured to comply with the EEC DIRECTIVE 89/336/EEC, 93/68/EEC and 2006/95/EC.

Maintenance and Service

Refer to the information in this chapter before contacting a service technician.

Handling the unit

When shipping the unit

Please save the original shipping carton and packing materials. If you need to ship the unit, for maximum protection, re-pack the unit as it was originally packed at the factory.

Keeping the exterior surfaces clean

- Do not use volatile liquids such as insecticide spray near the unit.
- Do not leave rubber or plastic products in contact with the unit for a long period of time. since they leave marks on the surface.

Cleaning the unit

To clean the player, use a soft, dry cloth. If the surfaces are extremely dirty, use a soft cloth lightly moistened with a mild detergent solution.

Do not use strong solvents such as alcohol, benzine, or thinner, as these might damage the surface of the unit.

Maintaining the Unit

The DVD/CD Receiver is a high-tech, precision device. If the optical pick-up lens and disc drive parts are dirty or worn, the picture quality could be diminished.

Depending on the operating environment, regular inspection and maintenance are recommended after every 1,000 hours of use.

For details, please contact your nearest authorized service center.



Disposal of your old appliance

1. When this crossed-out wheeled bin symbol is attached to a product it means the product is covered by the European Directive 2002/96/EC.
2. All electrical and electronic products should be disposed of separately from the municipal waste stream via designated collection facilities appointed by the government or the local authorities.
3. The correct disposal of your old appliance will help prevent potential negative consequences for the environment and human health.
4. For more detailed information about disposal of your old appliance, please contact your city office, waste disposal service or the shop where you purchased the product.

Introduction

Before use

To ensure proper use of this product, please read this owner's manual carefully and retain it for future reference.

This manual provides information on the operation and maintenance of your DVD/CD Receiver. Should the unit require service, contact an authorized service location.

About the ✋ Symbol Display

" ✋ " may appear on your TV display during operation and indicates that the function explained in this owner's manual is not available on that specific DVD video disc.

Symbol Used in this Manual

Note:
Indicates special notes and operating features.

Tip:
Indicates tips and hints for making the task easier.

A section whose title has one of the following symbols is applicable only to the disc represented by the symbol.

- DVD — DVD
- VCD — Video CDs
- ACD — Audio CDs
- MP3 — MP3 files
- WMA — WMA files
- JPEG — JPEG files
- DivX — DivX files

Manufactured under license from Dolby Laboratories. "Dolby", "Pro Logic", and the double-D symbol are trademarks of Dolby Laboratories. Confidential Unpublished works. Copyright 1992-1997 Dolby Laboratories. All rights reserved.

Manufactured under license from Digital Theater Systems, Inc. U.S. Pat. No's. 5,451,942; 5,956,674; 5,974,380; 5,978,762; 6,226,616; 6,487,535 and other U.S. and world-wide patents issued and pending. "DTS" and "DTS Digital Surround" are registered trademarks of Digital Theater Systems, Inc. Copyright 1996, 2003 Digital Theater Systems, Inc. All Rights Reserved.

Types of Playable Discs

DVD VIDEO	DVD (8 cm / 12 cm disc)
COMPACT disc DIGITAL VIDEO	Video CD (VCD) (8 cm / 12 cm disc)
COMPACT disc DIGITAL AUDIO	Audio CD (8 cm / 12 cm disc)

In addition, this unit can play a DVD±R, DVD±RW, SVCD and CD-R or CD-RW that contains audio titles, MP3, WMA, JPEG or DivX files.

Notes:

- Depending on the conditions of the recording equipment or the CD-R/RW (or DVD-RW, DVD+RW) disc itself, some CD-R/RW (or DVD-RW, DVD+RW) discs may not be played on the unit.
- Do not attach any seal or label to either side (the labeled side or the recorded side) of a disc.
- Do not use irregularly shaped CDs (e.g., heart-shaped or octagonal). It may result in malfunctions.

Regional Code

This unit has a regional code printed on the rear of the unit. This unit can play only DVD discs labelled as the same as the rear of the unit or "ALL".

Notes on Regional Codes

- Most DVD discs have a globe with one or more numbers in it clearly visible on the cover. This number must match your DVD player's regional code or the disc cannot play.
- If you try to play a DVD with a different regional code from your player, the message "Check Regional Code" appears on the TV screen.

SIMPLINK

What is SIMPLINK?

Some functions of this unit are controlled by TV's remote control when this unit and LG TV with SIMPLINK are connected through HDMI connection.

- Controllable functions by LG TV's remote control; Play, Pause, Scan, Skip, Stop, Power Off, etc.
- Refer to the TV owner's manual for the details of SIMPLINK function.
- LG TV with SIMPLINK function has the logo as shown above.

Front Panel/Rear Panel

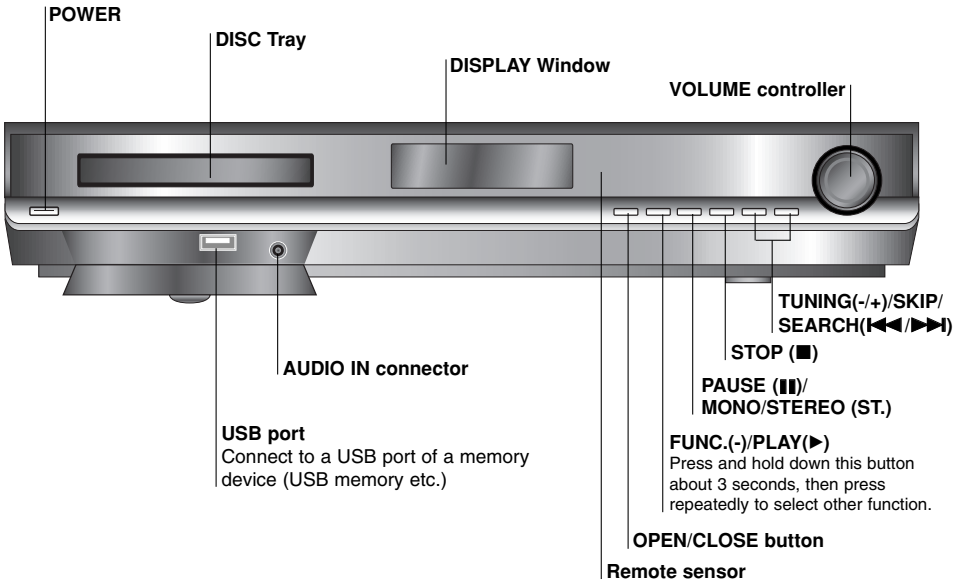

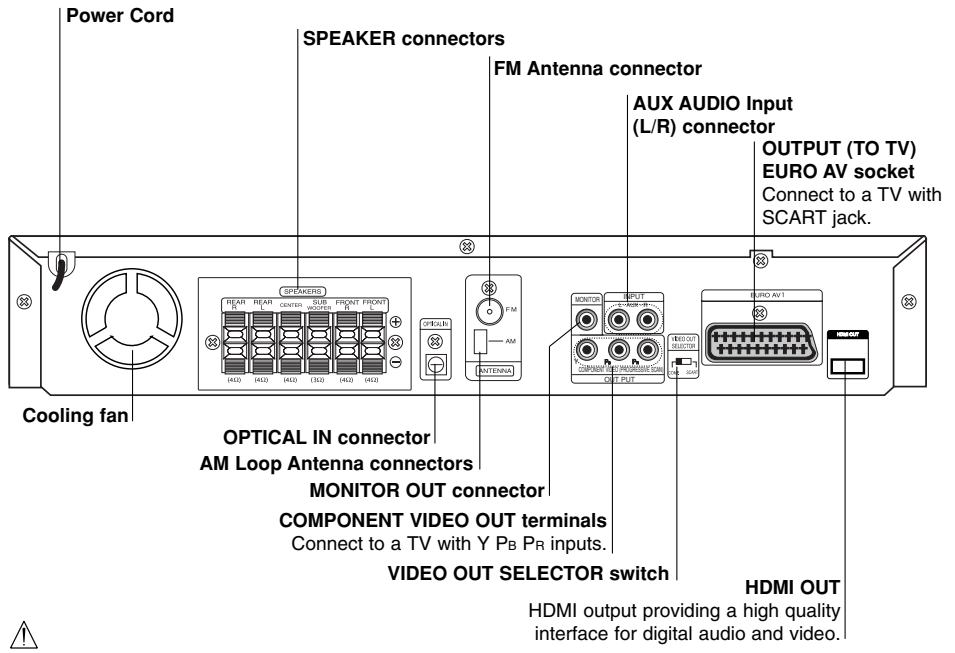

⚠

Do not touch the inner pins of the jacks on the rear panel. Electrostatic discharge may cause permanent damage to the unit.

Remote Control

POWER

TUNER
Selects the System's tuner (FM and AM bands).

AUX
Selects input source.

USB
Plays the multimedia files.

DIMMER
Changes brightness of the display window on the front panel during in power-on status.

AUDIO
Selects an audio language (DVD) or an audio channel (CD).

SOUND
Selects the sound mode.

REPEAT
Repeats chapter, track, title, all

REPEAT A-B
Repeats sequence.

MENU
Accesses the menu on a DVD disc.

ZOOM

SETUP
Accesses or removes setup menu.

DISPLAY
Accesses On-Screen display.

RETURN
Removes the setup menu.

◄/►/▲/▼ (left/right/up/down)
Selects an option in the menu.

ENTER
Acknowledges the menu selection.

PRESET (-/+)
Selects programme of Radio.

TUN. (-/+)
Tunes in the desired radio station.

0-9 numerical buttons
Selects a service, programme number directly or selects numbered options in a menu.

PTY
To start a search for a specific PTY type.

HDMI
Switches the HDMI mode to HDMI (active) and OFF (inactive).

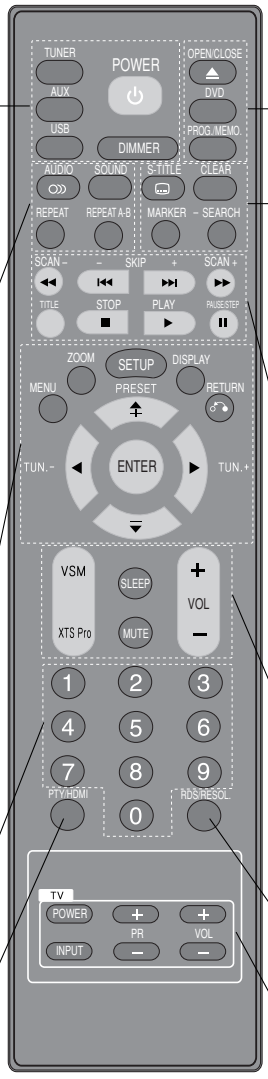

OPEN/CLOSE (⏏)
Opens and closes the disc tray.

DVD
Selects the output source (CD/DVD).

PROG./MEMO.
Accesses or removes Program menu. Enter a radio station's frequency into the tuner.

S-TITLE
Selects a subtitle language (DVD).

CLEAR
Removes a track number on the program menu or a mark on the MARKER SEARCH menu.

MARKER
Marks a point during playback.

SEARCH
Displays MARKER SEARCH menu.

SCAN/SLOW(◄◄/►►)
Searches backward or forward. Reverse/ Forward slow playback.

REVERSE/FORWARD SKIP (I◄◄/►►I)

TITLE
Displays the disc's Title menu, if available.

STOP (■)

PLAY (►)

PAUSE/STEP (❚❚)

VSM

XTS pro
Supplies more natural and realistic sound.
Supplies great sound effect.

SLEEP
Sets the System to turn off automatically at a specified time.

MUTE

VOLUME (-/+)
Adjusts speaker volume.

RDS
Views the various displays of the RDS options.

RESOL.
Changes the resolution depending on your TV.

TV
Controls the TV. (LG TV only)
(See page16)

Remote Control Operation Range

Point the remote control at the remote sensor and press the buttons.

- **Distance:** About 23 ft (7 m) from the front of the remote sensor
- **Angle:** About 30° in each direction in front of the remote sensor

Remote control battery installation

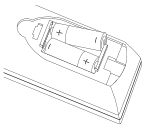

Remove the battery cover on the rear of the remote control, and insert two R06 (size AA) batteries with ⊕ and ⊖ aligned correctly.

⚠ Caution

Do not mix old and new batteries. Never mix different types of batteries (standard, alkaline, etc.).

Installation and Setup

TV Connection

Make one of the following connections, depending on the capabilities of your existing equipment.

Tips:

- Depending on your TV and other equipment you wish to connect, there are various ways you could connect the DVD/CD Receiver. Use one of the connections described below.
- Please refer to the manuals of your TV, VCR, Stereo System or other devices as necessary to make the best connections.

Caution:

- Make sure the DVD/CD Receiver is connected directly to the TV. Select the correct AV input on your TV.
- Do not connect your DVD/CD Receiver to TV via your VCR. The DVD image could be distorted by the copy protection system.

Rear of DVD/CD Receiver

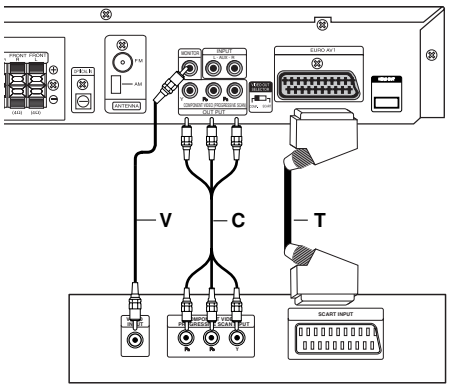

Rear of TV

Video connection

Connect the MONITOR OUT jack from the DVD/CD Receiver to the VIDEO IN jack on the TV using the video cable **(V)**.

Component Video (Color Stream®) connection

Connect the COMPONENT VIDEO OUT jacks from the DVD/CD Receiver to the corresponding jacks on the TV using an Y P_B P_R cable **(C)**.

SCART connection

Connect the EURO AV OUTPUT (TO TV) socket on the DVD/CD Receiver to the corresponding jacks on the TV using the scart cable **(T)**.

- If your television is a high-definition or "digital ready" television, you may take advantage of the DVD/CD Receiver's progressive scan output for the highest video resolution.
- If your TV does not accept your resolution setting, abnormal picture appears on the screen. Please read owner's manual for TV then set the resolution that your TV can accept.

Notes:

- The HDMI mode must be set to OFF for VIDEO OUT and Component video connections.
- A picture via scart input is not supported.

⚠ ***Caution***

VIDEO OUT SELECTOR switch



In power-off state, select either COMPONENT VIDEO OUT (PROGRESSIVE SCAN) or SCART signal of EURO AV TO TV terminal depending on how to connect the unit to the TV.

Optional Equipment Connection

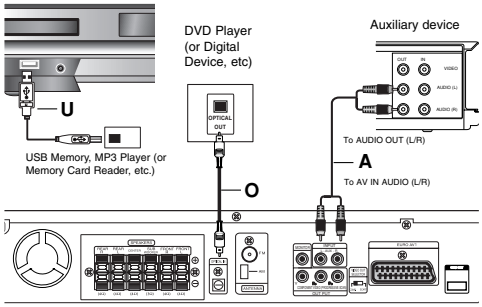

Rear of DVD/CD Receiver

USB connection (U)

Connect the USB port of USB Memory (or MP3 player, etc.) to the USB port on the front of the unit.

Removing the USB Device from the unit

1. Choose a different function mode or press STOP (■) twice in a row.
2. Remove the USB device from the unit.

Notes:

- Don't extract the USB device while operating.
- Music files (MP3/WMA), image files (JPEG) and video files can be played.
- This unit can not use a USB HUB.
- Recommended Memory Cards.
  Compact Flash Card (CFC), Micro Drive (MD), Smart Media Card (SMC), Memory Stick (MS), Secure Digital Card (SD), Multi Media Card (MMC), Memory Stick Pro (MS-Pro)
  - Compatible with : FAT16, FAT32
  - Only use the memory cards recommended.
- Devices which require additional program installation when you have connected the unit to a computer are not supported.
- In case of a USB HDD, make sure to connect an auxiliary power cord to the USB HDD for proper operation. Up to four primary partitions of a drive are supported. If there is an extension partition, it will not be supported.
- If the drive of USB device is two or more, a drive folder is displayed on the screen. If you want to move to the initial menu after you select a folder, press RETURN.
- Digital cameras and mobile phones are not supported.

AUX IN connection (A)

Connect a Output of auxiliary device to the AUX AUDIO Input (L/R) Connector.

OPTICAL IN connection (O)

Connect an optical output of DVD Player (or Digital Device etc) to the OPTICAL IN connector.

AUDIO IN connection (D)

Connect a output of portable device (MP3 or PMP etc) to the AUDIO input connector.

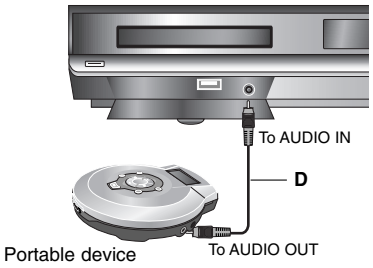

Antenna Connection

Connect the supplied FM/AM antenna for listening to the radio.

- Connect the AM Loop antenna to the AM antenna connector.
- Connect the FM Wire antenna to the FM antenna connector.

Notes:

- To prevent noise pickup, keep the AM Loop antenna away from the DVD/CD Receiver and other components.
- Be sure to fully extend the FM wire antenna.
- After connecting the FM Wire antenna, keep it as horizontal as possible.

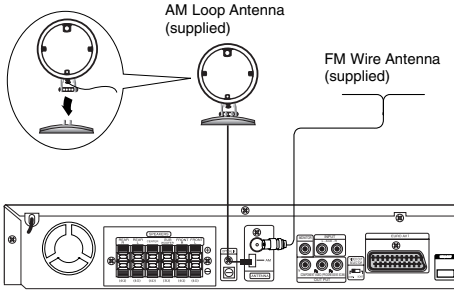

Assembling and Connecting to the Speakers

The front speakers are detached from the speaker stands. Connect the speaker cords and assemble the front speakers from speaker stands as illustrated.

1. Connect the speaker cords to the appropriate terminals on the bottom of each front speaker.
2. Attach the front speakers to the speaker stands by rotating the screw.

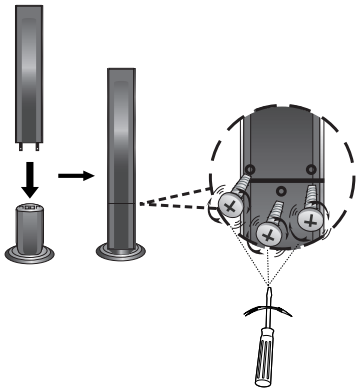

Speaker System Connection

Connect the speakers using the supplied speaker cables.

To obtain the best possible surround sound, adjust the speaker parameters (volume, distance, etc.).

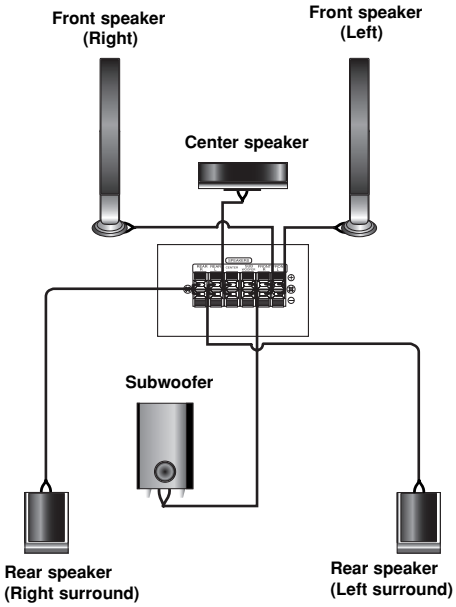

Notes:

- Be sure to match the speaker cable to the appropriate terminal on the components: + to + and – to –. If the cables are reversed, the sound will be distorted and will lack bass.
- If you use front speakers with low maximum input rating, adjust the volume carefully to avoid excessive output on the speakers.

HDMI Connection

About HDMI

HDMI (High Definition Multimedia Interface) supports both video and audio on a single digital connection for an easy all- digital output to an HDMI or DI-equipped TV.

Connection to an HDMI TV requires an HDMI cable while connection to a DVI-equipped TV requires a DVI adapter besides a HDMI cable.

HDMI has the capability to support standard, enhanced, or high-definition video plus standard to multi-channel surround-sound audio, HDMI features include uncompressed digital video, a bandwidth of up to 5 gigabytes per second, one connector (instead of several cables and connector), and communication between the AV source and AV devices such as DTVs.

HDMI, the HDMI logo and High-Definition Multimedia Interface are trademarks or registered trademarks of HDMI licensing LLC.

If you have a HDMI TV or monitor, you can connect it to this DVD/CD Receiver using a HDMI cable.

1. Connect the HDMI OUT jack on the DVD/CD Receiver to the HDMI jack on a HDMI compatible TV or monitor (H).
2. Set the TV's source to HDMI (refer to owner's manual for TV).
3. In the stop mode, select HDMI mode by pressing HDMI. Press RESOL. repeatedly to select the resolution you wish to change.

Notes:

- The arrow on the cable connector body should face up for correct alignment with the connector on the DVD/CD Receiver.
- If HDMI cable is not connected, the HDMI button does not operate.
- If there is noise or there are lines on the screen, please check the HDMI cable.
- Not all HDCP-compatible DVI devices will work with this DVD/CD Receiver.

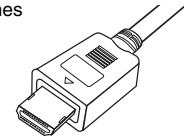

- If TV does not support HDCP, snow noise appears on the screen, or picture may be vibrated.

Tip :

When you use HDMI connection, you can change the resolution (480p or 576p, 720p, 1080i) for the HDMI output by pressing RESOL. on the Remote Control.

Important Note

If you turn off the TV or disconnect the HDMI cable during playback of the device, playback will pause.

You have to click on the play button to play back again.

For some TVs, when you change the TV mode, such condition specified above may happen.

Rear of DVD/CD Receiver

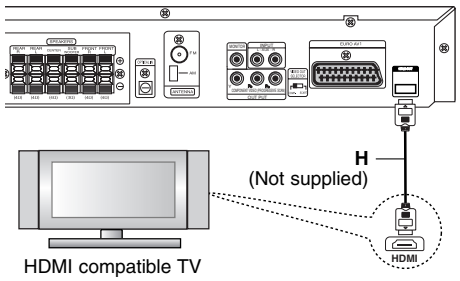

Resolution setting

You can change the resolution for the COMPONENT VIDEO OUT by pressing RESOL. on the Remote Control. Available resolution settings are as shown below.

OUTPUT CONNECTION	Available Resolution	
	PAL	NTSC
HDMI VIDEO OUT	1920 x 1080i 1280 x 720p 720 x 576p	1920 x 1080i 1280 x 720p 720 x 480p
COMPONENT VIDEO OUT	1920 x 1080i 1280 x 720p 720 x 576p 720 x 576i	1920 x 1080i 1280 x 720p 720 x 480p 720 x 480i
MONITOR OUT	720 x 576i	720 x 480i
SCART	720 x 576i	-

Notes:

- If the picture does not appear on the screen with the analog video connections, change the resolution to 480i (or 576i).
- For 720p and 1080i resolution on the component video out, only non-copy protected discs can be played back. If the disc is copy protected, it will be displayed at the 576p(PAL) 480p(NTSC) resolution.
- 1080i, 720p, 576p and 480p does not work with the analog video connections (MONITOR OUT).
- The component ($Y/P_B/P_R$) will output to black picture in the RGB mode.
- If you change the resolution, the display MENU (MP3/JPEG/DivX) size is changed.
- If your TV does not accept your resolution setting, abnormal picture appears on the screen. Please read owner's manual for TV, and then set the resolution that your TV can accept.

Caution:

Changing the resolution when the DVD/CD Receiver is connected with HDMI connector may result in malfunctions. To solve the problem, turn off the DVD/CD Receiver and then turn it on again.

Displaying Disc Information On - screen

You can display various information about the disc loaded on-screen.

1. Press DISPLAY to show various playback information.
   The displayed items differ depending on the disc type or playing status.
2. You can select an item by pressing ▲ / ▼ and change or select the setting by pressing ◄ / ►.
   - Title (Track) – Current title (or track) number/ total number of titles (or tracks).
   - Chapter – Current chapter number/total number of chapters.
   - Time – Elapsed playing time.
   - Audio – Selected audio language or channel.
   - Subtitle – Selected subtitle.
   - Angle – Selected angle/total number of angles.
   - Sound – Selected sound mode.

Note:
If any button is not pressed for a few seconds, the on-screen display disappears.

Initial Settings

By using the Setup menu, you can make various adjustments to items such as picture and sound. You can also set a language for the subtitles and the Setup menu, among other things. For details on each Setup menu item, see the pages 11 to 14.

To display and exit the Menu:
Press SETUP to display the menu. A second press of SETUP will take you back to initial screen.

To go to the next level:
Press ► on the remote control.

To go back to the previous level:
Press ◄ on the remote control.

GENERAL OPERATION

1. Press SETUP. The Setup menu appears.
2. Use ▲ / ▼ to select the desired option then press ► to move to the second level. The screen shows the current setting for the selected item, as well as alternate setting(s).
3. Use ▲ / ▼ to select the second desired option and then press ► to move to the third level.
4. Use ▲ / ▼ to select the desired setting then press ENTER to confirm your selection. Some items require additional steps.
5. Press SETUP or PLAY to exit the Setup menu.

LANGUAGE

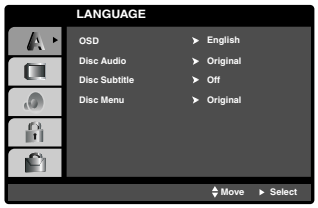

OSD

Select a language for the Setup menu and then on-screen display.

Disc Audio / **Subtitle** / **Menu**

Select the language you prefer for the audio track (disc audio), subtitles, and the disc menu.

Original – Refers to the original language in which the disc was recorded.

Other – To select another language, press numeric buttons and then ENTER to enter the corresponding 4-digit number according to the language code list on the page 23. If you enter the wrong language code, press CLEAR.

DISPLAY

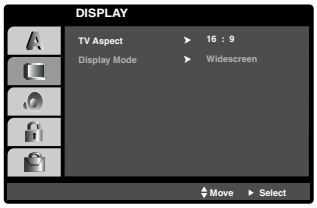

TV Aspect

4:3 – Select when a standard 4:3 TV is connected.

16:9 – Select when a 16:9 wide TV is connected.

Display Mode

The display Mode setting works only when the TV Aspect mode is set to “4:3”.

Letterbox – Displays a wide picture with bands on the upper and lower portions of the screen.

Panscan – Automatically displays the wide picture on the entire screen and cuts off the portions that do not fit.

AUDIO

Each DVD disc has a variety of audio output options. Set the receiver's AUDIO options according to the type of audio system you use.

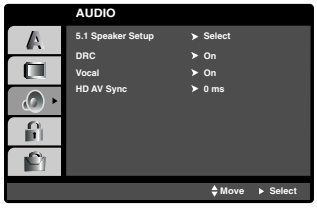

Dynamic Range Control (DRC)

With the DVD*1 format, you can hear a program's soundtrack in the most accurate and realistic presentation, thanks to digital audio technology. However, you may wish to compress the dynamic range of the audio output (the difference between the loudest sounds and the quietest ones). Then, you may listen to a movie at a lower volume without losing clarity of sound. Set DRC to On for this effect.
*1: Dolby Digital only

Vocal

Set Vocal to On only when a multi-channel karaoke DVD is playing. The karaoke channels on the disc will mix into normal stereo sound.

HD AV Sync

When using Digital TV.

Sometimes AV signal could not be transmitted simultaneously because of later transmission of video signal compared to audio signal.

Because it takes some time to convert analog video signal to digital one in the Digital TV.

And It means that you may not enjoy picture on the screen and sound from speaker at the same time even though it is one scene.

In the HD AV Sync menu, you could adjust delay time to audio signal for simultaneous AV signal transmission

- Delay time could be set up with 10msec unit. (0 ~ 300ms)
- Delay time is different according to each TV Brand. So you need to adjust optimal delay time complying with your TV.

5.1 Speaker Setup

Make the following settings for the built-in 5.1 channel surround decoder.

1. Press ENTER, and the 5.1 Speaker Setup menu appears.

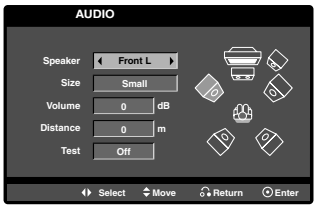

2. Use ◄ / ► to select the desired speaker.
3. Adjust options using ▲ / ▼ / ◄ / ► buttons.
4. Press ENTER to confirm your selection. Returns to the previous menu.

Speaker selection

Select a speaker that you want to adjust. [Front speaker (Front L), Front speaker (Front R), Center Speaker (Center), Subwoofer (SubWoofer), Rear speaker (Rear L), Rear speaker (Rear R)]

Note:

Certain speaker settings are prohibited by the Dolby Digital licensing agreement.

Size

Since the speaker settings are fixed, you cannot change the settings.

Volume

Press ◄ / ► to adjust the output level of the selected speaker. (-5dB ~ 5dB)

Distance

If you connected speakers to your DVD/CD Receiver, setting the Distance lets the speakers know how far the sound has to travel to reach your set listening point. This allows the sound from each speaker to reach the listener at the same time.
Press ◄ / ► to adjust the Distance of the selected speaker. (You can't adjust front / Woofer speakers)

Test

Press ◄ / ► to test the signals of each speaker. Adjust the volume to match the volume of test signals memorized in the system.
Front Left (Front L) → Center → Front Right (Front R) → Rear Right (Rear R) → Rear Left (Rear L) → SubWoofer

LOCK (Parental Control)

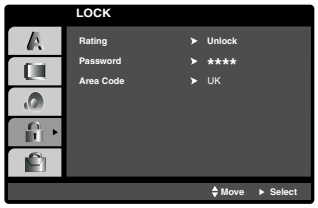

Rating

Blocks playback of rated DVDs based on their contents. Not all discs are rated.

1. Select “Rating” on the LOCK menu then press ►.
2. To access the LOCK options, you must input the password you have created. If you have not yet entered password, you are prompted to do so.

   Input a password and press ENTER. Enter it again and press ENTER to verify. If you make a mistake before pressing ENTER, press CLEAR.
3. Select a rating from 1 to 8 using the ▲ / ▼ buttons.

   Rating 1-8: Rating one (1) has the most restrictions and rating eight (8) is the least restrictive.

   Unlock: If you select unlock, parental control is not active and the disc plays in full.
4. Press ENTER to confirm your rating selection, then press SETUP to exit the menu.

Password

You can enter or change password.

1. Select Password on the LOCK menu and then press ►.
2. Follow the step 2 as shown above (Rating).

   To change the password, press ENTER when the “Change” option is highlighted. Input a password and press ENTER. Enter it again and press ENTER to verify.
3. Press SETUP to exit the menu.

If you forget your password

If you forget your password, you can clear it using the following steps:

1. Press SETUP to display the Setup menu.
2. Input the 6-digit number “210499” and press ENTER. The password is cleared.

Area Code

Enter the code of the area whose standards were used to rate the DVD video disc, based on the list on page 23.

1. Select “Area Code” on the LOCK menu then press ►.
2. Follow the step 2 as shown previous paragraph (Rating).
3. Select the first character using ▲ / ▼ buttons.
4. Press ► and select the second character using ▲ / ▼ buttons.
5. Press ENTER to confirm your Area code selection.

OTHERS

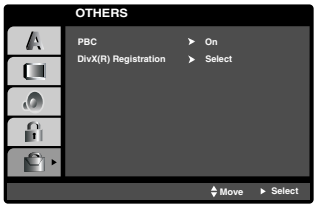

PBC

Set Playback Control (PBC) to On or Off.

On: Video CDs with PBC are played according to the PBC.

Off: Video CDs with PBC are played in the same way as Audio CDs.

DivX(R) Registration

We provide you the DivX® VOD (Video On Demand) registration code that allows you to rent and purchase videos based on the DivX® VOD service. For more information, visit www.divx.com/vod.

1. Select “DivX(R) Registration” option and then press ►.
2. Press ENTER while “Select” is selected and the registration code will appear.
   Use the registration code to purchase or rent the videos from DivX® VOD service at www.divx.com/vod. Follow the instructions and download the video onto a disc for playback on this unit.
3. Press ENTER to exit.

Note:

All the downloaded videos from DivX® VOD can only be played back on this unit.

Operation

General features

Buttons	Operations	Discs
⏏ (OPEN / CLOSE)	Opens or closes the disc tray.	ALL
❚❚ (PAUSE)	During playback, press ❚❚ to pause playback.	ALL
	Press ❚❚ repeatedly to play Frame-by-Frame.	DVD VCD DivX
SKIP (⏮ / ⏭)	During playback, press SKIP (⏮ or ⏭) to go to the next chapter/track or to return to the beginning of the current chapter/track.	ALL
	Press SKIP ⏮ twice briefly to step back to the previous chapter/track.	
SCAN (◀◀ / ▶▶)	During playback, press SCAN (◀◀ or ▶▶) repeatedly to select the required scan speed. DVD : ◀◀, ◀◀◀, ◀◀◀◀, ◀◀◀◀◀, ◀◀◀◀◀◀ or ▶▶, ▶▶▶, ▶▶▶▶, ▶▶▶▶▶, ▶▶▶▶▶▶ DivX disc, Video CD : ◀◀, ◀◀◀, ◀◀◀◀, ◀◀◀◀◀ or ▶▶, ▶▶▶, ▶▶▶▶, ▶▶▶▶▶ WMA/MP3, Audio CD : ◀◀ (X2, X4, X8) or ▶▶ (X2, X4, X8)	DVD VCD DivX ACD MP3 WMA
REPEAT	During playback, press REPEAT repeatedly to select a desired repeat mode. DVD Video discs: Chapter/Title/Off Video CD, Audio CD, DivX/MP3/WMA discs: Track/All/Off	ALL
REPEAT A-B	During playback, press REPEAT A-B to select a point A and a point B and repeats a sequence from point A (Starting point) to point B (End point). Press REPEAT A-B to exit.	DVD VCD
ZOOM	During playback or in the pause mode, press ZOOM to enlarge the video image (3 steps). You can move through the zoomed picture using ◀ ▶ ▲ ▼ buttons.	DVD VCD
TITLE	If the current DVD title has a menu, the title menu appears on the screen. Otherwise, the disc menu may appears.	DVD
MENU	The disc menu appears on the screen.	DVD
(SUBTITLE)	During playback, press S-TITLE repeatedly to select a desired subtitle language.	DVD DivX
(AUDIO language)	During playback, press AUDIO repeatedly to hear a different audio language or audio track.	DVD DivX
(AUDIO channel)	Press AUDIO repeatedly during playback to hear a different audio channel (STER., LEFT or RIGHT).	VCD
SLOW	In the pause mode, press SCAN (◀◀ or ▶▶) to select the required speed. DVD : ◀❚ (1/2, 1/4, 1/8, 1/16) or ❚▶ (1/2, 1/4, 1/8, 1/16) Video CD : ❚▶ (1/2, 1/4, 1/8, 1/16)	DVD VCD

Notes on general features:

- Zoom may not work on some DVDs.
- The A-B repeat function is available only in the current title.

Additional features

1.5 times speed playback

DVD VCD ACD MP3 WMA

You can play at 1.5 times speed.
The 1.5 speed allows you to watch the pictures and listen to the sound quicker than playing at a normal speed on the disc.

1. During playback, press PLAY(►) to play at 1.5 times speed. "►X1.5" appears on the screen.
2. Press PLAY(►) again to exit.

Time Search DVD VCD DivX

To start playing at any chosen time on the disc:

1. Press DISPLAY during playback.
2. Press ▲ / ▼ to select the time clock icon and "--:--:--" appears.
3. Input the required start time in hours, minutes, and seconds from left to right. If you enter the wrong numbers, press CLEAR to remove the numbers you entered. Then input the correct numbers.
4. Press ENTER to confirm. Playback starts from the selected time.

Marker Search DVD VCD DivX

To enter a Marker

You can start playback from up to nine memorized points. To enter a marker, press MARKER at the desired point on the disc. The Marker icon appears on the TV screen briefly. Repeat to enter up to nine markers.

To Recall or Clear a Marked Scene

1. During disc playback, press SEARCH. The marker search menu appears on the screen.
2. Within 10 seconds, press ◄ / ► to select a marker number that you want to recall or clear.
3. Press ENTER and playback starts from the marked scene. Or press CLEAR and the marker number is erased from the list.
4. You can play any marker by inputting its number on the marker search menu.

Screen Saver

The screen saver appears when you leave the unit in Stop mode for about five minutes.

Last Scene Memory DVD

This receiver memorizes the last scene from the last disc that is viewed. The last scene remains in the memory even if you remove the disc from the receiver or switch off the receiver. If you load a disc that has the scene memorized, the scene is automatically recalled.

Note:

This receiver does not memorize the scene of a disc if you switch off the receiver before commencing to play the disc.

System Select

You must select the an appropriate system mode for your TV system. If NO DISC appears in the display window, press and hold ❚❚ on the front panel or PAUSE/STEP (❚❚) remote control for more than 5 seconds to be able to select a system (PAL, NTSC).

- When the selected system is not compatible with the system of your TV, normal colour picture may not be displayed.

NTSC: Select when DVD/CD Receiver is connected with NTSC-TV.

PAL: Select when DVD/CD Receiver is connected with PAL-TV.

Controlling the TV

Your remote control is capable of operating your DVD/CD Receiver as well as limited functions of LG TV.
Follow the instructions below to operate your LG TV.

Setting Remote Control Codes for LG TV

1. Hold **POWER (TV)** and press **PR (-/+)** button repeatedly until the TV on or off.
2. The **POWER (TV), PR (-/+), VOL (-/+),** and **INPUT** buttons on remote control are used to operate the LG TV.

Note:

If the remote control does not operate your particular TV, try the other code or use the remote control originally supplied with the LG TV. (LG and Gold Star)
Due to the variety of codes used by manufacturers, OUR COMPANY cannot guarantee that the remote control will operate every LG TV model.

Playing an Audio CD or MP3/WMA file

This unit can play Audio CDs or MP3/WMA files.

MP3/ WMA/ Audio CD
Once you insert an MP3/WMA files recording media or Audio CD a menu appears on the TV screen.
Press ▲ / ▼ to select a track/file and then press PLAY or ENTER, and playback starts. You can use variable playback functions. Refer to the page 15.

ID3 TAG
When playing a file containing information such as track titles, you can see the information by pressing DISPLAY. (Song, Artist, Album, Genre, Comment)

Tips:
- Press MENU to move to the next page.
- On a CD with MP3/WMA and JPEG, you can switch MP3/WMA and JPEG. Press TITLE, and MUSIC or PHOTO word on top of the menu is highlighted.

MP3 / WMA disc compatibility with this player is limited as follows:
- Sampling frequency: within 32 - 48 kHz (MP3), within 24 - 48kHz (WMA)
- Bit rate: within 32 - 320kbps (MP3), 40 - 192kbps (WMA)
- The DVD/CD Receiver cannot read an MP3/WMA file that has a file extension other than ".mp3" / ".wma".
- CD-R physical format should be ISO 9660
- If you record MP3 / WMA files using software that cannot create a file system (eg. Direct-CD) it is impossible to playback MP3 / WMA files.We recommend that you use Easy-CD Creator, which creates an ISO 9660 file system.
- File names should have a maximum of 8 letters and must incorporate an .mp3 or .wma extension.
- They should not contain special letters such as / ? * : " < > I etc.
- The total number of files on the disc should be less than 999.

This DVD/CD Receiver requires discs and recordings to meet certain technical standards in order to achieve optimal playback quality. Pre-recorded DVDs are automatically set to these standards. There are many different types of recordable disc formats (including CD-R containing MP3 or WMA files) and these require certain pre-existing conditions (see above) to ensure compatible playback.

Customers should note that permission is required in order to download MP3 / WMA files and music from the Internet. Our company has no right to grant such permission. Permission should always be sought from the copyright owner.

Programmed Playback

The program function enables you to store your favorite tracks from any disc in the receiver memory. A program can contain 300 tracks.

1. Insert a disc.
   Audio CD and MP3/WMA Discs:
2. Select a track on the "List" and then press PROG. or select "♫➡ (Add)" icon and then press ENTER to place the selected track on the "Program" list. Repeat to place additional tracks on the list.

Note:
You can add all tracks in the disc. Select "♫♫➡ (Add All)" icon then press ENTER.

3. Select the track you want to start playing on the "Program" list. Press MENU to move to the next page.
4. Press PLAY or ENTER to start. Playback begins in the order in which you programmed the tracks. Playback stops after all of the tracks on the "Program" list have played once.
5. To resume normal playback from programmed playback, select a track of AUDIO CD (or MP3/WMA) list and then press PLAY.

Repeat Programmed Tracks

1. Press REPEAT when playing a disc. The repeat icon appears.
2. Press REPEAT to select a desired repeat mode.
   • TRACK: repeats the current track
   • ALL: repeats all the tracks on programmed list.
   • Off (No display): does not play repeatedly.

Erasing a Track from "Program" List

1. Use ▲▼ to select the track that you wish to erase from the Program list.
2. Press CLEAR. Alternatively, select "♫🗑 (Delete)" icon then press ENTER to place the selected track on the Program list. Repeat to erase additional tracks on the list.

Erasing the Complete Program List

Use ▲ / ▼ to select "♫♫🗑 (Del all)" and then press ENTER.

Note:
The programs are also cleared when the disc is removed.

Viewing a JPEG file JPEG

This unit can play discs with JPEG files.
Before playing JPEG recordings, read the notes on JPEG Recordings on the right.

1. Insert a disc and close the tray.
   The PHOTO menu appears on the TV screen.

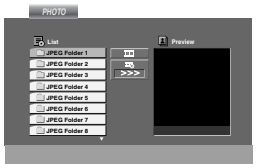

2. Press ▲ / ▼ to select a folder, and then press ENTER. A list of files in the folder appears.
   If you are in a file list and want to return to the previous Folder list, use the ▲ / ▼ buttons on the remote to highlight .. and press ENTER.
3. If you want to view a particular file, press ▲ / ▼ to highlight a file and press ENTER or PLAY. While viewing a file, you can press STOP to move to the previous menu (JPEG menu).

Note:

When viewing a JPEG file, the resolution is changed 480p or 576p if the resolution set to 1080i. You can change the resolution for 720p, 576p or 480p.

Tips:

- There are four Slide Speed options :
  > (Slow), >> (Normal), >>> (Fast) and II (off).
  Use ▲/▼/◄/► to highlight the Speed. Then, use ◄ / ► to select the option you want to use and then press ENTER.
- If you set Speed option to Off, the slide is not active.

Slide Show

Use ▲ ▼ ◄ ► to highlight the (Slide Show) then press ENTER.

Still Picture

1. Press PAUSE/STEP during the slide show.
   The DVD/CD Receiver will now go into the PAUSE mode.
2. To return to the slide show, press PLAY or press PAUSE/STEP again.

Moving to another File

Press SKIP (**I◄◄** or **►►I**) once during viewing a picture to advance to the next or previous file.

Rotating the picture

Press ▲ ▼ ◄ ► during showing a picture to rotate the picture clockwise or counter-clockwise.

JPEG disc compatibility with this player is limited as follows:

- Depending upon the size and the number of JPEG files, it could take a long time for the DVD/CD Receiver to read the disc's contents. If you don't see an on-screen display after several minutes, some of the files may be too large — reduce the resolution of the JPEG files to less than 2M pixels as 2760 x 2048 pixels and burn another disc.
- The total number of files and folders on the disc should be less than 999.
- Some discs may not operate due to a different recording format or the condition of disc.
- Ensure that all the selected files have the ".jpg" extensions when copying into the CD layout.
- If the files have ".jpe" or ".jpeg" extensions, please rename them as ".jpg" file.
- File names without ".jpg" extension will not be able to be read by this DVD/CD Receiver. Even though the files are shown as JPEG image files in Windows Explorer.

Playing a DivX Movie file

Using this DVD/CD Receiver you can play DivX disc.

1. Insert a disc and close the tray. The MOVIE menu appears on the TV screen.

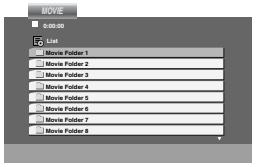

2. Press ▲ / ▼ to select a folder and then press ENTER. A list of files in the folder appears. If you are in a file list and want to return to the Folder list, use the ▲ / ▼ buttons on the remote to highlight _ and press ENTER.
3. If you want to view a particular file, press ▲ / ▼ to highlight a file and press ENTER or PLAY.
4. Press STOP to exit.

Notice for displaying the Divx subtitle

If the subtitle does not display properly during playback, press and hold S-TITLE for about 3 seconds then press S-TITLE to select another language code until the subtitle is displayed properly

Tips:

- Press MENU to move to the next page.
- On a CD with MP3/WMA, JPEG and MOVIE file, you can switch MUSIC, PHOTO and MOVIE menu. Press TITLE, and MUSIC, PHOTO and MOVIE word on top of the menu is highlighted.

Notes:

- Be sure to select “SUBTITLE ON” mode by pressing the subtitle file every time before playing a DivX file .
- When the subtile has more than two languages in the file, original subtile is only available.
- You can not adjust sound mode and VIRTUAL sound during the DivX file playing.

DivX disc compatibility with this player is limited as follows:

- Available resolution size of the DivX file is under 800x600 (W x H) pixel.
- The file name of the DivX subtitle is available by 45 characters.
- If there is impossible code to express in the DivX file, it may be displayed as " _ " mark on the display.
- **If the number of the screen frame is over 30 per 1 second, this unit may not operate normally.**
- **If the video and audio structure of recorded files are not interleaved, either video or audio is outputted.**

Playable DivX file

- ".avi ", ".mpg ", ".mpeg ", ".divx"

Playable Subtitle format

- SubRip(*.srt/*.txt)
  SAMI(*.smi)
  SubStation Alpha(*.ssa/*.txt)
  MicroDVD(*.sub/*.txt)
  SubViewer 2.0(*.sub/*.txt)
  VobSub(*.sub)

Playable Codec format

- "DIVX3.xx ", "DIVX4.xx ", "DIVX5.xx ", "MP43 ", "3IVX ".

Playable Audio format

"AC3 ", "DTS ", "PCM ", "MP3 ", "WMA ".
- Sampling frequency: within 32 - 48 kHz (MP3), within 24 - 48kHz (WMA)
- Bit rate: within 32 - 320kbps (MP3), 40 - 192kbps (WMA)

Presetting the Radio Stations

You can preset 50 stations for FM and AM (MW). Before tuning, make sure that you have turned down the volume.

1. Press TUNER on the remote control until FM or AM (MW) appears in the display window.
2. And then every time you press TUNER, FM and AM (MW) changes alternately.
3. Press and hold TUN.(-/+) for about two seconds until the frequency indication starts to change, then release.
   Scanning stops when the DVD/CD Receiver tunes in a station.
4. Press PROG./MEMO. on the remote control.
   A preset number will flash in the display window.
5. Press PRESET (-/+) on the remote control to select the preset number you want.
6. Press PROG./MEMO. on the remote control again.
   The station is stored.
7. Repeat steps 3 to 6 to store other stations.

To tune in a station with a weak signal

Press TUN.(-/+) repeatedly in step 3 to tune in the station manually.

To clear all the stored stations

Press and hold PROG./MEMO. for about two seconds and “ERASE ALL” is appeared in the display window and then press PROG./MEMO. again, the stations are cleared.

- If you have accidentally entered into the "ERASE ALL" mode and you do not wish to clear the memory, do not press any key. After a few seconds, "ERASE ALL" will go off by itself and change to normal mode.

Note:

If all stations have already been entered, the FULL message will appear in the display window for a moment and then a preset number will flash.
To change the preset number, follow the steps 5-6 as above.

Listening to the Radio

Preset radio stations in the DVD/CD Receiver’s memory first (see “Presetting radio stations” on the left).

1. Press TUNER until FM or AM (MW) appears in the display window.
   The last received station is tuned in.
2. Press PRESET (-/+) repeatedly on the remote control to select the preset station you want.
   Each time you press the button, the DVD/CD Receiver tunes in one preset station at a time.
3. Adjust the volume by rotating VOLUME on the front panel or by pressing VOLUME + or - on the remote control repeatedly.

To turn off the radio

Press POWER to turn the DVD/CD Receiver off or select another function mode (DVD/CD, AUX, USB).

To listen to non-preset radio stations

- Use manual or automatic tuning in the step 2.
- For manual tuning, press TUN.(-/+) repeatedly.
- For automatic tuning, press and hold TUN.(-/+) for about two seconds on the front panel.

To select a preset radio station directly

You can use the number buttons on the remote control to select a preset radio station directly.
For example, to listen to the preset station 4, press 4 on the remote control. To listen to the preset station 19, press 1 and then 9 (within 3 seconds).

For your reference

- **If an FM program is noisy**
  Press MONO/ST. on the front panel to make “STEREO” disappear in the display window. There will be no stereo effect, but the reception will improve. Press the button again to restore the stereo effect.
- **To improve reception**
  Reorient the supplied antennas.

RDS Operation

This unit is equipped with RDS (Radio Data System), which brings a wide range of information to FM radio. RDS, now being used in many countries, is a system for transmitting station call signs or network information, a description of station programme type text message about the station or specifics of musical selection and the correct time.

RDS TUNING

When a FM station is tuned in and it contains RDS data, the unit will automatically display the station's call sign and the RDS indicator will light in the Display Window as well as indicators for the RDS services programme (PS), programme type recognition (PTY), Radio text (RT) and Clock Time (CT) if transmitted by the station.

RDS DISPLAY OPTIONS

The RDS system is capable of transmitting a wide variety of information in addition to the initial call sign that appears when a station is first tuned. In normal RDS operation the display will indicate the station name, broadcast network or call letters. Pressing **RDS** on the remote control enables you to cycle through the various data types in the sequence:

(PS ↔ FREQUENCY ↔ PTY ↔ RT ↔ CT)

- **PS (Programme Service name)-** The name of the channel is shown in the Display Window.
- **PTY (Programme type recognition)-** The name of the programme type is shown in the Display Window.
- **RT (Radiotext)-** A "text" message contains special information from the broadcast station. Note that this message may scroll across the display to permit message.
- **CT (Time controlled by the channel)-** Enables the unit to receive the actual time and show it in the Display Window.

Note:

Some RDS stations may not choose to include some of these additional features. If the data required for the selected mode is not being transmitted, the Display Window will show a **PTY NONE, RT NONE, CT NONE, or PS NONE** message.

Programme Search (PTY)

A major benefit of RDS is its ability to encode broadcasts with Programme Type (PTY) codes that indicate the type of material being broadcast. The following list shows the abbreviations used to indicate each PTY along with an explanation of the PTY.

NEWS	News
AFFAIRS	Current Affairs
INFO	Information
SPORT	Sports
EDUCATE	Educational
DRAMA	Drama
CULTURE	Culture
SCIENCE	Science
VARIED	Varied Speech Programme
POP M	Popular Music
ROCK M	Rock Music
EASY M	Easy Listening Music
LIGHT M	Light Music
CLASSICS	Classical Music
OTHER M	Other Music
WEATHER	Weather Information
FINANCE	Financial Programmes
CHILDREN	Children's Programmes
SOCIAL	Social Affairs Programmes
RELIGION	Religious Broadcasts
PHONE IN	Phone-In Programmes
TRAVEL	Travel and Touring
LEISURE	Leisure and Hobby
JAZZ	Jazz Music
COUNTRY	Country Music
NATION M	National Music
OLDIES	Oldies Music
FOLK M	Folk Music
DOCUMENT	Documentary Programmes
TEST	Station Alarm Test Message
ALARM !	Emergency Broadcast Information

You may search for a specific Programme Type (PTY) by following these steps:

1. Press TUNER to select the FM mode.
2. Press PTY on the remote control, the display will show the last PTY in use.
3. Press PTY repeatedly to select a desired PTY.
4. When the PTY is selected, press TUN.(-/+).The unit will go into an automatic search mode. When a station is tuned, the search will stop.

Sleep Timer Setting

You can set the DVD/CD Receiver to turn off automatically at a specified time.

1. **Press SLEEP to set the desired sleep time.**
   The SLEEP indicator and the sleep time appears in the display window.
2. **Each time you press SLEEP the setting changes in the following order.**
   SLEEP 180 →150 →120→90 →80 → 70 → 60→ 50 → 40 → 30 → 20 →10 →OFF (No display)

Note:

You can check the remaining time before the DVD/CD Receiver turns off.
Press SLEEP. The remaining time appears in the display window.

Dimmer

This function will change the brightness of the display window on the front panel during in power-on status.

Press the DIMMER repeatedly.

Mute

Press MUTE to mute your unit.

You can mute your unit in order, for example, to answer the telephone, the “MUTE” indicator flashes in the display window.

Selecting input source

You can use VCRs or other units connected to the AV IN, EURO AV connector or Optical connector. Refer to the Owner’s Manual supplied with the unit for further information on the operation.

Press AUX repeatedly on the remote control to select the desired input source.

Each time you press this button, the mode of the function changes in the following sequence:

- **AUX :** for selecting the analog signal from AUX AUDIO Input (L/R) Connector.
- **AUX OPT:** for selecting the optical digital signal from OPTICAL IN Connector.
- **TV-AUDIO:** for selecting the TV audio signal from SCART.
- **AUDIO IN:** for selecting the analog signal from AUDIO IN Connector.

Notes

- The Optical input function is available only when the sampling frequency of other unit is 32 - 96kHz.
- You can also select the input source by pressing FUNC. button on the front panel.
  Press and hold this button for about 3 seconds, then press repeatedly to select other function.

XTS/XTS pro

Each time you press **XTS pro** the setting changes in the following order.

XTS ON → NORMAL → XTS-P ON...

- XTS-P ON
  The unique sound quality of the LG Technology creates the optimum sound for you to play the perfect playback of the original sound and to feel the living sound source.
- XTS ON
  When playing the movie with the weak bass sound relatively to the general music, it enforces the sense of sound at woofer for you to satisfy with. In the mode of 2 CH BYPASS, It creates the high display effect by playing the sound source via the rear speakers same as the front speakers.

Note

The XTS mode is temporarily disabled when changing from 2.1 CH to 5.1 CH and it is enabled when changing it to 2.1 CH.

- NORMAL
  XTS-P and XTS mode tune off

VIRTUAL sound

Press **VSM** to set the VIRTUAL sound.

Source	Display	Effect
2.1 ch.	VIRTUAL	3D STEREO
5.1 ch	VIRTUAL	Multichannel sound

- **3D STEREO**

  Realtime 3D positioned sound rendering technology with stereo sources, optimized for stereo speakers. Listeners may experience amazing virtual surround effects with their own multimedia players.

- **Multichannel sound**

  The Multichannel sound changes the sound in 5.1 ch into a virtual one in the 10.1 ch so that it provides such a feeling that you listen to the sound simultaneously from the right and left speakers and center speaker.

Sound Mode

You can enjoy surround sound simply by selecting one of the pre-programmed sound fields according to the program you want to listen to. (2 ch. sound only)

Press SOUND button repeatedly.

BYPASS → ON STAGE → STUDIO → CLUB → HALL → THEATER 1 → CHURCH → PL II MOVIE → PL II MUSIC → PL II MTRX → BYPASS...

Note:

Initial sound mode is BYPASS.

Reference

Language Codes

Use this list to input your desired language for the following initial settings:
Disc Audio, Disc Subtitle, Disc Menu.

Language	Code	Language	Code	Language	Code	Language	Code
Abkhazian	6566	Fiji	7074	Lingala	7678	Singhalese	8373
Afar	6565	Finnish	7073	Lithuanian	7684	Slovak	8375
Afrikaans	6570	French	7082	Macedonian	7775	Slovenian	8376
Albanian	8381	Frisian	7089	Malagasy	7771	Somali	8379
Ameharic	6577	Galician	7176	Malay	7783	Spanish	6983
Arabic	6582	Georgian	7565	Malayalam	7776	Sudanese	8385
Armenian	7289	German	6869	Maltese	7784	Swahili	8387
Assamese	6583	Greek	6976	Maori	7773	Swedish	8386
Aymara	6588	Greenlandic	7576	Marathi	7782	Tagalog	8476
Azerbaijani	6590	Guarani	7178	Moldavian	7779	Tajik	8471
Bashkir	6665	Gujarati	7185	Mongolian	7778	Tamil	8465
Basque	6985	Hausa	7265	Nauru	7865	Tatar	8484
Bengali; Bangla	6678	Hebrew	7387	Nepali	7869	Telugu	8469
Bhutani	6890	Hindi	7273	Norwegian	7879	Thai	8472
Bihari	6672	Hungarian	7285	Oriya	7982	Tibetan	6679
Breton	6682	Icelandic	7383	Panjabi	8065	Tigrinya	8473
Bulgarian	6671	Indonesian	7378	Pashto, Pushto	8083	Tonga	8479
Burmese	7789	Interlingua	7365	Persian	7065	Turkish	8482
Byelorussian	6669	Irish	7165	Polish	8076	Turkmen	8475
Cambodian	7577	Italian	7384	Portuguese	8084	Twi	8487
Catalan	6765	Japanese	7465	Quechua	8185	Ukrainian	8575
Chinese	9072	Javanese	7487	Rhaeto-Romance	8277	Urdu	8582
Corsican	6779	Kannada	7578	Rumanian	8279	Uzbek	8590
Croatian	7282	Kashmiri	7583	Russian	8285	Vietnamese	8673
Czech	6783	Kazakh	7575	Samoan	8377	Volapük	8679
Danish	6865	Kirghiz	7589	Sanskrit	8365	Welsh	6789
Dutch	7876	Korean	7579	Scots Gaelic	7168	Wolof	8779
English	6978	Kurdish	7585	Serbian	8382	Xhosa	8872
Esperanto	6979	Laothian	7679	Serbo-Croatian	8372	Yiddish	7473
Estonian	6984	Latin	7665	Shona	8378	Yoruba	8979
Faroese	7079	Latvian, Lettish	7686	Sindhi	8368	Zulu	9085

Area Codes

Choose a area code from this list.

Area	Code	Area	Code	Area	Code	Area	Code
Afghanistan	AF	Ethiopia	ET	Malaysia	MY	Saudi Arabia	SA
Argentina	AR	Fiji	FJ	Maldives	MV	Senegal	SN
Australia	AU	Finland	FI	Mexico	MX	Singapore	SG
Austria	AT	France	FR	Monaco	MC	Slovak Republic	SK
Belgium	BE	Germany	DE	Mongolia	MN	Slovenia	SI
Bhutan	BT	Great Britain	GB	Morocco	MA	South Africa	ZA
Bolivia	BO	Greece	GR	Nepal	NP	South Korea	KR
Brazil	BR	Greenland	GL	Netherlands	NL	Spain	ES
Cambodia	KH	Heard and McDonald Islands	HM	Netherlands Antilles	AN	Sri Lanka	LK
Canada	CA	Hong Kong	HK	New Zealand	NZ	Sweden	SE
Chile	CL	Hungary	HU	Nigeria	NG	Switzerland	CH
China	CN	India	IN	Norway	NO	Taiwan	TW
Colombia	CO	Indonesia	ID	Oman	OM	Thailand	TH
Congo	CG	Israel	IL	Pakistan	PK	Turkey	TR
Costa Rica	CR	Italy	IT	Panama	PA	Uganda	UG
Croatia	HR	Jamaica	JM	Paraguay	PY	Ukraine	UA
Czech Republic	CZ	Japan	JP	Philippines	PH	United States	US
Denmark	DK	Kenya	KE	Poland	PL	Uruguay	UY
Ecuador	EC	Kuwait	KW	Portugal	PT	Uzbekistan	UZ
Egypt	EG	Libya	LY	Romania	RO	Vietnam	VN
El Salvador	SV	Luxembourg	LU	Russian Federation	RU	Zimbabwe	ZW

Troubleshooting

Check the following guide for the possible cause of a problem before contacting service.

Symptom	Cause	Correction
No power.	• The power cord is disconnected.	• Plug the power cord securely into the wall outlet.
The power is on, but the DVD/CD Receiver does not work.	• No disc is inserted.	• Insert a disc. (Check that the DVD or, audio CD indicator in the DVD display is lit.)
No picture.	• The TV is not set to receive DVD signal output.	• Select the appropriate video input mode on the TV so the picture from the DVD/CD Receiver appears on the TV screen.
	• The video cable is not connected securely.	• Connect the video cable into the jacks securely.
	• The connected TV power is turned off.	• Turn on the TV.
There is no sound or only a very low-level sound is heard.	• The equipment connected with the audio cable is not set to receive DVD signal output.	• Select the correct input mode of the audio receiver so you can hear the sound from the DVD/CD Receiver.
	• The audio cables are not connected securely.	• Connect the audio cable into the jacks securely.
	• The power of the equipment connected with the audio cable is turned off.	• Turn on the equipment connected with the audio cable.
	• The audio connecting cable is damaged.	• Replace it with new one.
The playback picture is poor.	• The disc is dirty.	• Clean the disc.
The DVD/CD Receiver does not start playback.	• No disc is inserted.	• Insert a disc. (Check that the DVD, or audio CD indicator in the DVD display is lit.)
	• An unplayable disc is inserted.	• Insert a playable disc. (Check the disc type, colour system and Regional code.)
	• The disc is placed upside down.	• Place the disc with the playback side down.
	• The disc is not placed within the guide.	• Place the disc on the disc tray correctly inside the guide.
	• The disc is dirty.	• Clean the disc.
	• A menu is on the TV screen.	• Press the SETUP button to turn off the menu screen.
	• The Rating level is set.	• Cancel the Rating function or change the rating level.
Loud hum or noise is heard.	• The disc is dirty.	• Clean the disc.
	• The speakers and components are connected poorly.	• Connect the speakers and components securely.
	• The DVD/CD Receiver is located too close to the TV.	• Move your TV away from the audio components.

Symptom	Cause	Correction
Radio stations cannot be tuned in.	• The antenna is positioned or connected poorly.	• Connect the antenna securely.
		• Adjust the antennas and connect an external antenna if necessary.
	• The signal strength of the stations is too weak (when tuning in with automatic tuning).	• Tune in the station manually.
	• No stations have been preset or preset stations have been cleared (when tuning by scanning preset stations).	• Preset the stations (page 20).
The remote control does not work properly.	• The remote control is not pointed at the remote sensor of the DVD/CD Receiver.	• Point the remote control at the remote sensor of the DVD/CD Receiver.
	• The remote control is too far from the DVD/CD Receiver.	• Use the remote control within about 23 ft (7 m).
	• There is an obstacle in the path of the remote control and the DVD/CD Receiver.	• Remove the obstacle.
	• The batteries in the remote control are flat.	• Replace the batteries with new ones.
The front panel display is too dim.	• Nothing is displayed on the front panel display.	• Press DIMMER on the remote control.

Specifications

General		Power supply	Refer to main label.	
		Power consumption	Refer to main label.	
		Net Weight	3.9 kg	
		External dimensions (W x H x D)	430 x 70 x 310 mm	
		Operating conditions	Temperature: 5°C to 35°C, Operation status: Horizontal	
		Operating humidity	5% to 85%	
		Laser	Semiconductor laser, wavelength 650 nm	
CD/DVD		Signal system	PAL 625/50, NTSC 525/60	
		Frequency response (audio)	200 Hz to 18 kHz	
		Signal-to-noise ratio (audio)	More than 75 dB (1 kHz, NOP -6 dB, 20 kHz LPF/A-Filter)	
		Dynamic range (audio)	More than 70 dB	
		Harmonic distortion (audio)	0.5 % (1 kHz, at 1W position) (20 kHz LPF)	
Video		Video input	1.0 V (p-p), 75 Ω, negative sync., RCA jack x 1	
		Video output	1.0 V (p-p), 75 Ω, negative sync., RCA jack x 1/ SCART (TO TV)	
		COMPONENT VIDEO OUT	(Y) 1.0 V (p-p), 75 ohms, negative sync, RCA jack x 1 (PB)/(PR) 0.7 V (p-p), 75 ohms, RCA jack x 1	
Tuner	FM	Tuning Range	87.5 - 108.0 MHz or 65.0 - 74.0 MHz, 87.5 - 108.0 MHz	
		Intermediate Frequency	10.7 MHz	
		Signal-to Noise Ratio	60 dB (Mono)	
		Frequency Response	140 - 10,000 Hz	
	AM [MW]	Tuning Range	522 - 1,620 kHz or 520 - 1,720 kHz	
		Intermediate Frequency	450 kHz	
Amplifier		Stereo mode	155 W + 155 W (4Ω at 1 kHz, THD 10 %)	
		Surround mode **(* Depending on the sound mode settings and the source, there may be no sound output.)**	Front: 155 W + 155 W (THD 10 %) Center*: 155 W Surround*: 155 W + 155 W (4Ω at 1 kHz, THD 10 %) Subwoofer*: 225 W (3Ω at 30 Hz, THD 10 %)	
		Inputs	AUDIO IN, OPTICAL IN	
		Outputs	MONITOR OUT, HDMI OUT, EURO AV (TO TV) OUT COMPONENT VIDEO OUT	
Speakers			Front Speaker (SH92PB-F)	Center speaker (SH92PB-C)
		Type	2 Way 3 Speaker	2 Way 3 Speaker
		Impedance	4 Ω	4 Ω
		Frequency Response	80 - 18000 Hz	80 - 18000 Hz
		Sound Pressure Level	83 dB/W (1m)	83 dB/W (1m)
		Rated Input Power	155 W	155 W
		Max. Input Power	310 W	310 W
		Net Dimensions (W x H x D)	280 x 1201 x 280 mm	450 x 161 x 102 mm
		Net Weight	4.4 kg	1.8 kg
			Rear Speaker (SH92PB-S)	Passive Subwoofer (SH92PB-W)
		Type	1 Way 1 Speaker	1 Way 1 Speaker
		Impedance	4 Ω	3 Ω
		Frequency Response	120 - 18000 Hz	40 - 1500 Hz
		Sound Pressure Level	83 dB/W (1m)	82 dB/W (1m)
		Rated Input Power	155 W	225 W
		Max. Input Power	310 W	450 W
		Net Dimensions (W x H x D)	113 x 209 x 83 mm	258 x 440 x 401 mm
		Net Weight	0.83 kg	6.8 kg

✻ Designs and specifications are subject to change without notice.

Technology with the human touch

GUARANTEE

- LG Electronics U.K. Ltd. will provide the following services in order to expedite this Guarantee.

1. All faulty components which fail due to defective manufacture will be replaced free of charge for a period of 12 months from the original date of purchase.
2. The dealer (or his service agent) who sold the product will be reimbursed for any labour provided in the repair of this LG equipment, for a period of 12 months from the original date of purchase. These claims must be made in accordance with the published scale of service charges and relevant claims procedure.

PLEASE NOTE:

A. The dealer may restrict the guarantee to the original purchaser.
B. The dealer is not obliged to carry out service under guarantee if unauthorized modifications are made to the apparatus, or if non standard components are used or if the serial number of the apparatus is removed, defaced, misused, or altered.
C. Any claims made under guarantee must be directed to the dealer from whom the equipment was originally purchased. The dealer may, before carrying out service under guarantee, require a receipted account as evidence of the date of purchase.
D. We respectfully point out that your dealer is not obligated to replace batteries if they become exhausted or worn in use.
E. Aerial alignment and consumer control adjustments are not covered by this guarantee.

This guarantee does not affect your statutory rights.

- REQUIREMENTS TO MAINTAIN WARRANTY COVERAGE:

RETAIN YOUR RECEIPT TO PROVE DATE OF PURCHASE. A COPY OF YOUR RECEIPT MUST BE SURRENDERED AT THE TIME GUARANTEE SERVICE IS PROVED.

- Product Registration Card : It is helpful to complete at least your name, address, phone, model & serial numbers and return it. This will enable LG to assist you in the future should you lose your receipt, your units be stolen, or should modifications be necessary.

- To obtain information or assistance: Call 0870 873 5454 Monday-Friday 9.00am-4.30pm

MODEL NO.*	SERIAL NO.*	DATE OF PURCHASE.*

* Please complete for your own record

In all cases of difficulty - consult your LG dealer from whom the product was purchased

P/NO : MFL38637198