HDD/DVD
Recorder Receiver System
OWNER'S MANUAL

MODEL: HR902TA

(Main Unit: HR902TA-P01
Speakers: SH92TA-S, SH92TA-C, SH92TA-A)

Before connecting, operating or adjusting this product,
please read this instruction booklet carefully and completely.

FOR THE GUARANTEE TERMS & CONDITIONS,
PLEASE REFER TO BACK COVER OF THIS MANUAL.

CAUTION
RISK OF ELECTRIC SHOCK DO NOT OPEN

CAUTION: THESE SERVICING INSTRUCTIONS ARE FOR USE BY QUALIFIED SERVICE PERSONNEL ONLY. TO REDUCE THE RISK OF ELECTRIC SHOCK DO NOT PERFORM ANY SERVICING OTHER THAN THAT CONTAINED IN THE OPERATING INSTRUCTIONS UNLESS YOU ARE QUALIFIED TO DO SO.

Caution: The apparatus should not be exposed to water (dripping or splashing) and no objects filled with liquids, such as vases, should be placed on the apparatus.

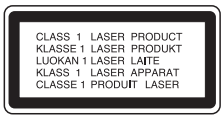

CAUTION:
CLASS 3B VISIBLE AND INVISIBLE LASER RADIATION WHEN OPEN AND INTERLOCKS DEFEATED AVOID EXPOSURE TO THE BEAM.

CAUTION: This product employs a Laser System.

To ensure proper use of this product, please read this owner's manual carefully and retain for future reference. Should the unit require maintenance, contact an authorized service center.

Use of controls, adjustments, or the performance of procedures other than those specified herein may result in hazardous radiation exposure.

To prevent direct exposure to laser beam, do not try to open the enclosure. Visible laser radiation when open. DO NOT STARE INTO BEAM.

WARNING: Do not install this equipment in a confined space such as a bookcase or similar unit.

This product is manufactured to comply with the EEC DIRECTIVE 89/336/EEC, 93/68/EEC and 2006/95/EC.

CAUTION concerning the Power Cord

Most appliances recommend they be placed upon a dedicated circuit;
That is, a single outlet circuit which powers only that appliance and has no additional outlets or branch circuits. Check the specification page of this owner's manual to be certain.

Do not overload wall outlets. Overloaded wall outlets, loose or damaged wall outlets, extension cords, frayed power cords, or damaged or cracked wire insulation are dangerous. Any of these conditions could result in electric shock or fire. Periodically examine the cord of your appliance, and if its appearance indicates damage or deterioration, unplug it, discontinue use of the appliance, and have the cord replaced with an exact replacement part by an authorized servicer.

Protect the power cord from physical or mechanical abuse, such as being twisted, kinked, pinched, closed in a door, or walked upon. Pay particular attention to plugs, wall outlets, and the point where the cord exits the appliance.

To disconnect power from the mains, pull out the mains cord plug. When installing the product, ensure that the plug is easily accessible.

SERIAL NUMBER:

You can find the serial number on the back of the unit. This number is unique to this unit and not available to others. You should record requested information here and retain this guide as a permanent record of your purchase.

Model No. _____

Serial No. _____

POWER: This unit operates on a mains supply of 200-240V~, 50/60Hz.
WIRING: This unit is supplied with a BSI 1363 approved 13 amp mains plug, fused at 3 amp. When replacing the fuse always use a 3 amp BS 1362, BSI or ASTA approved type. Never use this plug with the fuse cover omitted. To obtain a replacement fuse cover contact your dealer. If the type of plug supplied is not suitable for the mains sockets in your home, then the plug should be removed and a suitable type fitted. Please refer to the wiring instructions below:
WARNING: A mains plug removed from the mains lead of this unit must be destroyed. A mains plug with bared wires is hazardous if inserted in a mains socket. Do not connect either wire to the earth pin, marked with the letter E or with the earth symbol ⏚ or coloured green or green and yellow. If any other plug is fitted, use a 3 amp fuse, either in the plug, or at the distribution board.
IMPORTANT: The wires in this mains lead are coloured in accordance with the following codes:
- BLUE: NEUTRAL, BROWN: LIVE - As the colours of the wires in the mains lead of this unit may not correspond with the coloured marking identifying the terminals in your plug, proceed as follows: The wire which is coloured blue must be connected to the terminal which is marked with the letter N or coloured black. The wire which is coloured brown must be connected to the terminal which is marked with the letter L or coloured red.

VIDEO Plus+

VIDEO Plus+ and PlusCode are registered trademarks of Gemstar Development Corporation. The VIDEO Plus+ system is manufactured under license from Gemstar Development Corporation.

Contents

Introduction 4-9
About the ⊘ Symbol Display 4
Symbol Used in this Manual 4
Notes on Discs 4
Recordable and Playable Discs 5
Playable Discs 6
Regional Code 6
Availability of copying feature 6
About the internal hard disk drive 7
Playing media files using the USB feature 7
Front Panel 8
Remote Control 9
Remote Control Operation 9

Hookup and Settings 10-26
Rear Panel 10
Connecting to the Aerial 10
Connections to Your TV 11
HDMI connection 12
Accessory Audio/Video (A/V) Connections . .13-14
Radio Antenna Connections 14
Assembling and Connecting to the Speakers . .15
Speaker System Connections 16
Speaker Positioning 17
XTS/XTS pro 18
Sound Mode 18
Controlling Your TV with the Supplied Remote Control 18
Using the Home Menu 19
Initial Settings 19
General Settings 19-21
Auto Programming 19
Program Edit 20
AV1 Decoder 20
Auto Clock Set 21
Manual Clock Set 21
TV Aspect 21
Display Mode 21
AV2 Connection 21
Video Output Format 21
Power Save Mode 21
Initialization 21
Language Settings 22
Audio Settings 22
DRC (Dynamic Range Control) 22
5.1 Speaker Setup 22
Lock (Parental Control) Settings 23
Set Password / Rating / Area Code 23
DivX Registration Code 23
Recording Settings 24
Record Mode Set 24
Record Aspect 24
DV Recording Audio 24
Auto Chapter 24
Timeshift 24
Disc Settings 24-25
Disc Format 24
Finalize / Disc Label 25
Disc Protect 25
PBC 25
General Explanation of On-Screen Display 26

Playback 27-37
General Playback Features 27-30
Playing a DivX Movie File 31
Playing an Audio CD or MP3/WMA file 32
Program Playback with Audio CD and MP3/WMA file 33
Viewing a JPEG File 34-35
Editing a MP3/WMA, JPEG, DivX file 36-37

Recording 38-45
About DVD recording 38
About HDD recording 38
Timeshift 39
Basic Recording from a TV 40
Instant Timer Recording 40
Timer Recording 41
Timer Recording with VIDEO Plus+ System . . .42
Checking Timer Recording Details 43
Recording from an External Input 43
Recording from DV Input 44
Simultaneous recording and playback 45
Ripping CDs (for audio CDs) 45
To find your ripped tracks 45

Editing 46-52
Title List and Chapter List Menu Overview 46
HDD, VR Mode: Original and Playlist Editing . . .47
Adding Chapter Markers 47
Changing Title Thumbnails 47
Making a New Playlist 48
Adding Additional Title/Chapters to the Playlist .48
Deleting an Original or Playlist Title/Chapter . . .49
Deleting a Part 49
Naming a Title 50
Divide One Titles Into Two 51
Combining Two Chapters Into One 51
Moving a Playlist Chapter 52
Hide a Chapter 52
Protect a Title 52

Dubbing 53-54
Before Dubbing 53
Dubbing from HDD to DISC 54
Dubbing from DISC to HDD 54

Reference 55-62
Additional Information 55
Overwriting Recording 55
Viewing Title List menu displayed on other DVD Recorders or Players 55
Playing Your Recordings on Other DVD Players (Finalizing a Disc) 55
Language Codes 56
Area Codes 56
Presetting the Radio Stations 57
Listening to the Radio 57
RDS Operation 58
Programme Search (PTY) 58
Troubleshooting 59-60
Specifications 61-62

Introduction

To ensure proper use of this product, please read this owner's manual carefully and retain for future reference.

This manual provides information on the operation and maintenance of your recorder. Should the unit require service, contact an authorized service location.

About the ⊘ Symbol Display

" ⊘ " may appear on your TV display during operation and indicates that the function explained in this owner's manual is not available on that specific media.

Symbol Used in this Manual

Note:
Indicates special notes and operating features.

Tip:
Indicates tips and hints for making the task easier.

A section whose title has one of the following symbols are applicable only to the disc represented by the symbol.

HDD Titles recorded on the HDD
DVD ALL All DVD discs listed below.
RAM DVD-RAM disc
-RW VR DVD-RW with VR recording mode
-RW Video DVD-RW with Video recording mode
+RW DVD+RW disc
-R DVD-R disc
+R DVD+R (DL) disc
DVD DVD-Video disc
VCD Video CDs
ACD Audio CDs
DivX DivX files
MP3 MP3 files
WMA WMA files
JPEG JPEG files

Notes on Discs

Handling Discs
Do not touch the playback side of the disc. Hold the disc by the edges so that fingerprints do not get on the surface. Never stick paper or tape on the disc.



Storing Discs
After playing, store the disc in its case. Do not expose the disc to direct sunlight or sources of heat and never leave it in a parked car exposed to direct sunlight.

Cleaning Discs
Fingerprints and dust on the disc can cause poor picture quality and sound distortion. Before playing, clean the disc with a clean cloth. Wipe the disc from the center out.

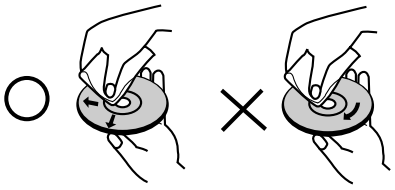

Do not use strong solvents such as alcohol, benzine, thinner, commercially available cleaners, or anti-static spray intended for older vinyl records.

Moisture Condensation

Never operate this product immediately after moving it from a cold location to a warm location. Leave it for two or three hours without operating it. If you use this product in such a situation, it may damage discs and internal parts.

SIMPLINK

What is SIMPLINK?
Some functions of this unit are controlled by TV's remote control when this unit and LG TV with SIMPLINK are connected through HDMI connection.

- Controllable functions by LG TV's remote control; Play, Pause, Scan, Skip, Stop, Power Off, etc.
- Refer to the TV owner's manual for the details of SIMPLINK function.
- LG TV with SIMPLINK function has the logo as shown above.

Recordable and Playable Discs

DVD-RW (Digital Video Disc - ReWritable):
- DVD-RW discs can be formatted for VR mode recording or Video mode recording.
- These Discs can be recorded on repeatedly. Recordings can be erased, then you can record again on the same Disc.

[VR mode]
- Recordings can be extensively edited
- Playable only on VR mode compatible players (after finalization)

[Video mode]
- Playable on regular DVD players (after finalization)
- Limited editing features

DVD-R (Digital Video Disc - Recordable)
- These Discs can be recorded only once. After you finalize a DVD-R, you cannot record on it or edit it.
- DVD-R discs can be only formatted to Video mode.
- Playable on regular DVD players (after finalization)
- Limited editing features

DVD-RAM (DVD - Random Access Memory)
- DVD-RAM discs can be formatted for VR mode recording.
- These Discs can be recorded on repeatedly. Recordings can be erased, then you can record again on the same Disc.
- Playable on DVD-RAM compatible players.
- Recordings can be extensively edited.
- Only DVD-RAM standard Version 2.0, 2.1 and 2.2 discs can be used in this unit.
- You cannot use the cartridge-type DVD-RAM disc in this unit.

DVD+RW (Digital Video Disc + ReWritable)
- These Discs can be recorded on repeatedly. Recordings can be erased, then you can record again on the same Disc.
- Playable on DVD+RW compatible players (automatically finalization)
- The edited contents are playable on DVD+RW compatible players only after finalization
- Recordings can be edited the title/chapter

DVD+R (Digital Video Disc + Recordable)
- These Discs can be recorded only once. After you finalize a DVD+R, you cannot record on it or edit it any more.
- Playable on DVD+R compatible players (after finalization)
- Any edited contents are not be compatible on DVD+R compatible players. (Hide, chapter combine, added chapter mark, etc.)
- Limited title/chapter editing features.

DVD+R DL (Digital Video Disc + Recordable; Double Layer)
- These Discs can be recorded only once. After you finalize a DVD+R DL, you cannot record on it or edit it any more.
- Storage space is nearly doubled with double layer DVD+R media, allowing consumers to record up to 8.5GB of video on a single DVD+R disc.
- Playable on DVD+R DL compatible players (after finalization)
- Any edited contents are not be compatible on DVD+R DL compatible players. (Hide, chapter combine, added chapter mark, etc.)
- Limited title/chapter editing features.

Recommended recordable DVD discs

DVD-R	DVD+R	DVD-RW	DVD+RW	DVD+R(DL)	DVD-RAM
Mitsubishi (8x, 16x)	Mitsubishi (8x, 16x)	Mitsubishi (4x)	Mitsubishi (4x)	Mitsubishi (2.4x)	Fuji film (2x)
That's (8x, 16x)	Ricoh (8x, 16x)	Verbatim (4x)	SONY (2.4x)	Maxell (2.4x)	Mitsubishi (3x)
SONY (16x)	SONY (16x)	JVC (4x)	Verbatim (2.4x)	-	-
-	-	Victor (4x)	Ricoh (2.4x, 4x)	-	-
-	-	Maxell (4x)	-	-	-

Note:

If a DVD-RW/DVD+RW discs is recorded using a personal computer or other HDD/DVD Recorder Receiver, you cannot format the disc using this recorder. So if you want to use the disc on this recorder, you must format the disc using the original recorder.

Playable Discs

DVD (8 cm / 12 cm disc)
- Discs such as movies that can be purchased or rented

Video CD (VCD) (8 cm / 12 cm disc)
- VIDEO CDs or CD-Rs/CD-RWs in VIDEO CD/Super VIDEO CD format

Audio CD (8 cm / 12 cm disc)
- Music CDs or CD-Rs/CD-RWs in music CD format that can be purchased

CD-R/CD-RW (8 cm / 12 cm disc)
- CD-R/CD-RW discs that contain audio titles, DivX, MP3, WMA, or JPEG files.

Notes:
– Depending on the conditions of the recording equipment or the CD-R/RW (or DVD±R/RW) disc itself, some CD-R/RW (or DVD±R/RW) discs cannot be played on the unit.
– Do not attach any seal or label to either side (the labeled side or the recorded side) of a disc.
– Do not use irregularly shaped CDs (e.g., heart-shaped or octagonal). Doing so may result in malfunctions.
– Depending on the recording software & the finalization, some recorded discs (CD-R/RW or DVD±R/RW) may not be playable.
– DVD-R/RW, DVD+R/RW and CD-R/RW discs recorded using a personal computer or a DVD or CD Recorder may not play if the disc is damaged or dirty, or if there is dirt or condensation on the Recorder's lens.
– If you record a disc using a personal computer, even if it is recorded in a compatible format, there are cases in which it may not play because of the settings of the application software used to create the disc. (Check with the software publisher for more detailed information.)
– This recorder requires discs and recordings to meet certain technical standards in order to achieve optimal playback quality. Pre-recorded DVDs are automatically set to these standards. There are many different types of recordable disc formats (including CD-R containing MP3 or WMA files) and these require certain pre-existing conditions (see above) to ensure compatible playback.
– Customers should note that permission is required in order to download MP3 / WMA files and music from the Internet. Our company has no right to grant such permission. Permission should always be sought from the copyright owner.

Regional Code

This unit has a regional code printed on the rear of the unit. This unit can play only DVD discs labeled same as the rear of the unit or "ALL".

Notes on Regional Codes
- Most DVD discs have a globe with one or more numbers in it clearly visible on the cover. This number must match your unit's regional code or the disc cannot play.
- If you try to play a DVD with a different regional code from the unit, the message "Incorrect region code. Can't play back" appears on the TV screen.

Availability of copying feature

From	To	MP3/WMA	JPEG	DivX	Audio CD	Video CD	Title*1
HDD	DISC	No	No	No	No	No	**Yes**
HDD	USB device	No	No	No	No	No	No
DISC	HDD	**Yes**	**Yes**	**Yes**	No*2	No	**Yes**
DISC	USB device	No	No	No	No	No	No
USB device	DISC	No	No	No	No	No	No
USB device	HDD	**Yes**	**Yes**	**Yes**	No	No	No

*1 The title is recorded from this unit.

*2 You can rip Audio CD tracks to the hard disk.

About the internal hard disk drive

The internal hard disk drive (HDD) is a fragile piece of equipment. Please use the recorder following the guidelines below to protect against possible HDD failure.
We recommend that you back up your important recordings onto DVD discs in order to protect against accidental loss.

- Do not move the recorder while it is on.
- Install and use the recorder on a stable, level surface.
- Do not block the rear vent/cooling fan.
- Do not use the recorder in excessively hot or humid places, or in places that may be subject to sudden changes in temperature. Sudden changes in temperature can cause condensation to form inside the recorder. This can be a cause of HDD failure.
- While the recorder is switched on, do not unplug from the wall socket or switch the electricity off from the breaker switch.
- Do not move the recorder immediately after switching it off. If you need to move the recorder, please follow the steps below:
  1. After the message POWER OFF is shown in the display, wait at least two minutes.
  2. Unplug from the wall socket.
  3. Move the recorder.
- If there's a power failure while the recorder is on there is a chance that some data on the HDD will be lost.
- The HDD is very delicate. If used improperly or in an unsuitable environment, it is possible that the HDD will fail after a few years of use. Signs of problems include playback unexpectedly freezing and noticeable block noise (mosaic) in the picture. However, sometimes there will be no warning signs of HDD failure.

  If the HDD fails, no playback of recorded material will be possible. In this case it will be necessary to replace the HDD unit.

Playing media files using the USB feature

You can enjoy the media files such as pictures (JPEG), movies (DivX) and tunes (MP3/WMA) saved in an MP3 player or USB memory by connecting the storage device to the USB port of this unit.

1. Connect the USB device to the USB port of the unit.
2. Press HOME on the remote control.
3. Select [MUSIC], [PHOTO] or [MOVIE] option. Details for the options are on page 19.

Compatible Devices

1. Devices which require additional program installation when you have connected it to a computer, are not supported.
2. MP3 Player: Flash type MP3 player.
   - The MP3 player requiring installation of a driver is not supported.
3. USB Flash Drive: Devices that support USB2.0 or USB1.1.

Notes:

- **Do not extract the USB device in operating (play, copy, move, etc.).**
- A back up demands to prevent a data damage.
- If you use a USB extension cable or USB hub, the USB device might not be recognized.
- This unit can support USB 2.0 or USB 1.1.
- A device using NTFS file system is not supported. (Only FAT (16/32) file system is supported.)
- The USB function of this unit does not support all USB devices.
- Digital camera and mobile phone are not supported.
- This unit is not supported when the total number of files is 1000 or more.
- DivX playback on USB may not be perfect for high bit rate content.
- When resetting this unit, remove the USB device from the USB port of this unit (see page 60.)

Front Panel

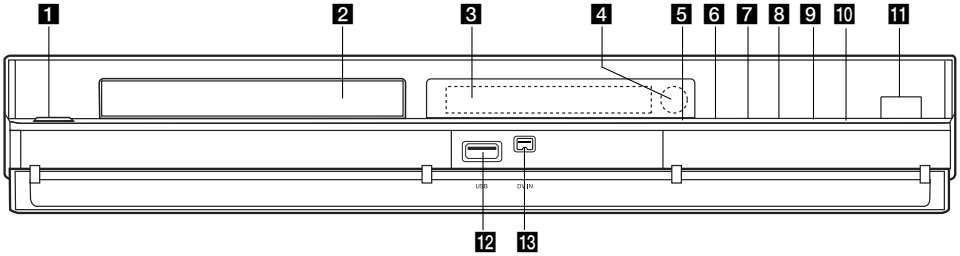

1 POWER
Switches the HDD/DVD Recorder Receiver ON or OFF.

2 Disc Tray
Insert a disc here.

3 Display window
Shows the current status of the recorder.
REC: The recorder is recording.
HDD: The recorder is HDD mode.
DVD: The recorder is DVD mode.
DVD ◄ ► HDD : The recorder is dubbing.
MUTE: The speaker sound is muted.
, **:** Indicates encoding format of the current disc.
: Indicates sound mode is DOLBY PRO LOGIC or DOLBY PRO LOGIC II.
: Indicates when the recorder is in timer recording or a timer recording is programmed.
: Indicates clock, total playing time, elapsed time, title number, radio frequency, volume, Surround, chapter/track number, channel, etc.

4 Remote Sensor
Point the recorder remote control here.

5 OPEN/CLOSE (⏏)
Opens or closes the disc tray.

6 ■ (STOP)
Stops playback or recording.

7 ► / ❚❚ (PLAY / PAUSE)
Starts playback.
Pause playback or recording temporarily, press again to exit pause mode.

8 ● (REC)
Starts recording. Press repeatedly to set the recording time.

9 HDD/DVD
Set the recorder's mode to HDD or DVD.

10 ADJUST
- Scans up or down through memorized channels.
- Selects menu options.

11 VOL(+/-)
Adjust speaker volume.

12 USB
Connect to a USB port of multimedia (USB memory etc.).

13 DV IN
Connect the DV output of a digital camcorder.

Touch Pad Operation

The buttons from 5 to 11 are touch pad type button that is operated with brief touch.
When you operate the button on the touch pad, you should follow the directions as below.

1. Touch the any button on the touch pad.
   The LEDs on the touch pad light up.
2. Touch the button you want to operate.
   The LEDs on the touch pad will be off in 10 seconds after the operation.

Precautions in using the touch pad

- The LEDs on the touch pad lights only when the power of the unit is on.
- Use the touch pad with clean and dry hands.
- Do not press the button on the touch pad with too much force.
- Do not touch the button on the touch pad with any conductive material such as metallic object. It may cause a malfunction.

Remote Control

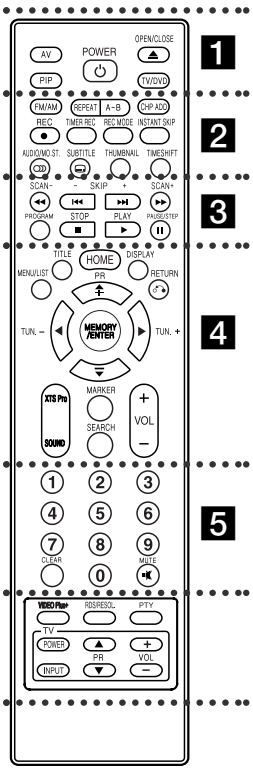

● ● ● ● ● **1** ● ● ● ● ●

AV: Changes the input to use for recording.(Tuner, AV1, AV2, AV3, OPT(AV3 Opt) or DV).

PIP: Selects PIP function on or off.

POWER: Turns HDD/DVD Recorder Receiver ON and OFF.

OPEN/CLOSE: Opens and closes the disc tray

TV/DVD: To view channels selected by the recorder tuner or by the TV tuner.

● ● ● ● ● **2** ● ● ● ● ●

FM/AM: Select FM or AM band as the listening choice. (FM and AM bands).

REPEAT: Repeat chapter, track, title or all.

A-B: Repeats sequence between two points (A and B)

CHP ADD: Inserts a chapter marker when playing/ recording.

REC: Starts recording. Press repeatedly to set the recording time.

TIMER REC: Displays Timer Record menu.

REC MODE: Selects the recording mode: XP, SP, LP or EP.

INSTANT SKIP: Skips 15 seconds forward during playback.

AUDIO/MO.ST.: Selects an audio language. Selects STEREO or MONO.

SUBTITLE: Selects a subtitle language.

THUMBNAIL: Selects a thumbnail picture

TIMESHIFT: Activates pause live TV/playback (timeshift) for a live TV program.

● ● ● ● ● **3** ● ● ● ● ●

SCAN (-/+) (◀◀/▶▶): Search backward or forward.

SKIP (-/+) (I◀◀ / ▶▶I): Go to next chapter or track. Returns to beginning of current chapter or track or go to previous chapter or track.

PROGRAM: Accesses or removes program menu.

STOP (■): Stops playback or recording.

PLAY (▶): Starts playback.

PAUSE/STEP (❚❚): Pause playback or recording temporarily.

● ● ● ● ● **4** ● ● ● ● ●

MENU/LIST: Accesses menu on a DVD disc, Switches between Title List-Original and Title List-Playlist menu.

TITLE: Displays the disc's Title menu, if available.

HOME: Accesses or removes the HOME menu.

DISPLAY: Accesses On-Screen Display. Displays information while viewing a TV program.

RETURN (↶): Removes the menu.

PR (+/-): Select programme of TV or Radio.

◄ / ► / ▲ / ▼ (left/right/up/down): Selects menu options.

MEMORY/ENTER : Confirms menu selections. Stores a radio station's frequency in the tuner's memory.

XTS Pro: To enjoy more natural and realistic sound.

SOUND: Selects sound mode.

MARKER: Marks any point during playback

SEARCH: Displays Marker Search menu.

VOL (+/-): To adjust speaker volume.

● ● ● ● ● **5** ● ● ● ● ●

0-9 numerical buttons: Selects numbered options in a menu.

CLEAR: Removes a mark on the Marker Search menu.

MUTE: Turns the sound on and off temporarily.

● ● ● ● ● **6** ● ● ● ● ●

VIDEO Plus+: To display the program menu for VIDEO Plus+ System programming.

RDS/RESOL.: To view the various displays of the RDS options. Sets the output resolution for HDMI.

PTY: To start a search for a specific PTY type.

TV Control Buttons: See page 18.

Remote Control Operation

Point the Remote Control at the remote sensor and press the buttons.

Remote Control Battery Installation

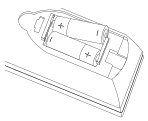

Remove the battery cover on the rear of the Remote Control, and insert two (size AA) batteries with ⊕ and ⊖ matched correctly.

⚠**Caution**

Do not mix old and new batteries. Never mix different types of batteries (standard, alkaline, etc.).

Hookup and Settings

Rear Panel

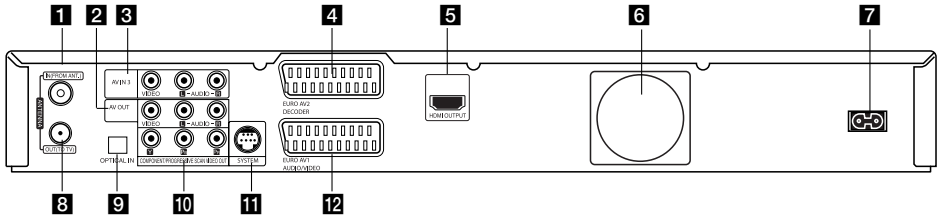

1 IN (FROM ANT.)
Connect the aerial to this terminal.

2 AV OUT (VIDEO / AUDIO OUT (Left/Right))
Connect to a TV with video/audio inputs.

3 AV IN 3 (VIDEO IN/AUDIO IN (Left/Right))
Connect the audio/video output of an external source (Audio system, TV/ Monitor, VCR, Camcorder, etc.).

4 EURO AV 2 DECODER
Connect the audio/video output of an external source (Pay-TV decoder, Set Top Box, VCR, etc.).

5 HDMI OUTPUT (Type A)
HDMI output providing a high quality interface for digital audio and video.

6 Cooling fan

7 AC Power Cord
Plug into the power source.

8 OUT (TO TV)
Passes the signal from the AERIAL to your TV/monitor

9 OPTICAL IN Connector
Connect an optical output of Digital Device.

10 COMPONENT/PROGRESSIVE SCAN VIDEO OUT (Y Pb Pr)
Connect to a TV with Y Pb Pr inputs.

11 SYSTEM
Connect the SPEAKER SYSTEM at the Active Speaker.

12 EURO AV 1 AUDIO/VIDEO
Connect to a TV with SCART jack.

Connecting to the Aerial

Remove the aerial cable plug from your TV set and insert it into the IN (FROM ANT.) socket at the back of the recorder. Plug one end of the aerial cable into the TV socket on the recorder and the other end into the aerial input socket on your TV set.

RF coaxial connection
Connect the OUT (TO TV) jack on the HDD/DVD Recorder Receiver to the aerial input jack on the TV using the 75-ohm Coaxial Cable **(R)**. The OUT (TO TV) jack passes the signal through from the IN (FROM ANT.) jack.

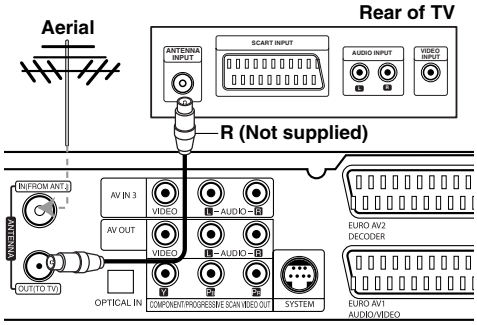

Rear of the HDD/DVD Recorder Receiver

Connections to Your TV

- Make one of the following connections, depending on the capabilities of your existing equipment.
- When using the COMPONENT/PROGRESSIVE SCAN VIDEO OUT jacks, set the Video output format option in the setup menu to YPbPr. When using the SCART jack, set the Video output format option in the setup menu to RGB.

Tips

- Depending on your TV and other equipment you wish to connect, there are various ways you could connect the recorder. Use only one of the connections described below.
- Please refer to the manuals of your TV, VCR, Stereo System or other devices as necessary to make the best connections.

⚠Caution

- Make sure the recorder is connected directly to the TV. Tune the TV to the correct video input channel.
- Do not connect the recorder's AUDIO OUT jack to the phono in jack (record deck) of your audio system.
- Do not connect your recorder via your VCR. The DVD image could be distorted by the copy protection system.

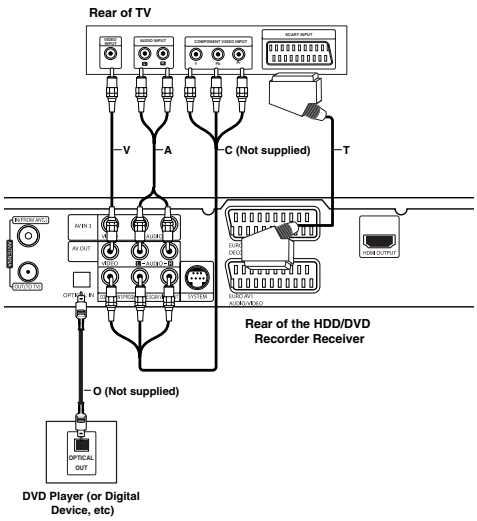

Video connection
Connect the VIDEO OUT jack on the recorder to the video in jack on the TV using the video cable **(V)**.

Audio (Left/Right) Connection
Connect the left and right AUDIO OUT jacks of the recorder to the audio left and right IN jacks on the TV using the audio cables **(A)**. Do not connect the recorder's AUDIO OUT jack to the phono in jack (record deck) of your audio system.

Component Video connection

Connect the COMPONENT / PROGRESSIVE SCAN VIDEO OUT jacks on the recorder to the corresponding input jacks on the TV using an Y Pb Pr cable **(C)**.

If your television is a high-definition or "digital ready" television, you may take advantage of the recorder's progressive scan output for the highest video resolution possible. If your TV does not accept the Progressive Scan format, the picture will appear scrambled if you try Progressive Scan on the recorder.

Set the resolution to 576p using RDS/RESOL. button for progressive signal.

Note:

Progressive scan does not work with the analog video connections (yellow VIDEO OUT jack) connection.

SCART connection

Connect the EURO AV1 AUDIO/VIDEO scart jack on the recorder to the corresponding in jacks on the TV using the scart cable **(T)**.

Optical Digital Connection
Connect an optical output of DVD Player (or Digital Device etc) to the OPTICAL IN connector on the recorder using the optical cable **(O)**.

Note:

When the Optical jack is connected, audio will output from speakers of the main unit amplifier only but the audio output is not available via the HDMI and AV jacks.

HDMI connection

If you have a HDMI TV or monitor, you can connect it to this recorder using a HDMI cable.

1. Connect the HDMI jack on the recorder to the HDMI jack on a HDMI compatible TV or monitor (H).
2. Set the TV's source to HDMI (refer to TV's Owner's manual).

Notes:

- The arrow on the cable connector body should face up for correct alignment with the connector on the recorder.

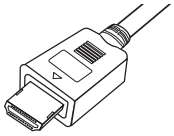

(Type A)

- If there is noise or lines on the screen, please check the HDMI cable.
- If you press RDS/RESOL. in RADIO mode, the resolution is not changed.

Tip :

When you use HDMI connection, you can change the resolution (576p, 720p, or 1080i) for the HDMI output using RDS/RESOL. button.

⚠Caution

Changing the resolution when the recorder is connected with HDMI connector may result in malfunctions. To solve the problem, turn off the recorder and then turn it on again.

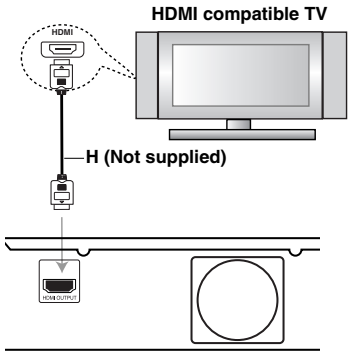

Rear of the HDD/DVD Recorder Receiver

About HDMI

HDMI (High Definition Multimedia Interface) supports both video and audio on a single digital connection for use with DVD Players, Set-Top Boxes, and other AV devices.
HDMI was developed to provide the technologies of HDCP (High Definition Contents Protection). HDCP is used to protect digital content transmitted and received.

HDMI has the capability to support standard, enhanced, or high-definition video plus standard to multi-channel surround-sound audio, HDMI features include uncompressed digital video, a bandwidth of up to 5 gigabytes per second, one connector (instead of several cables and connectors), and communication between the AV source and AV devices such as DTVs.

HDMI, the HDMI logo and High-Definition Multimedia Interface are trademarks or registered trademarks of HDMI licensing LLC.

Additional Information for HDMI

- When you connect a HDMI or DVI compatible device make sure of the followings:
  - Try switching off the HDMI/DVI device and this recorder. Next, switch on the HDMI/DVI device and leave it for around 30 seconds, then switch on this recorder.
  - The connected device's video input is set correctly for this unit.
  - The connected device is compatible with 720x576p, 1280x720p, or 1920x1080i video input.
- Not all HDCP-compatible DVI devices will work with this recorder.
  - The picture will not be displayed properly with non-HDCP device.
  - When the connected TV cannot accept the resolution you selected, you may not see normal picture on the TV screen.

Accessory Audio/Video (A/V) Connections

Connecting a PAY-TV/Canal Plus Decoder

You can watch or record PAY-TV/Canal Plus programmes if you connect a decoder (not supplied) to the recorder. Disconnect the recorder's mains lead from the mains when connecting the decoder.

To watch or record PAY-TV/Canal Plus programmes, set [AV2 Connection] option to [Decoder] (see page 21) and set the program's [Decoder On/Off] option to [On] on the Setup menu (page 20).

Tip:

You do not need to turn on the recorder to view the signals from the connected tuner on your TV.

Note:

If you disconnect the recorder's mains lead, you will not be able to view the signals from the connected decoder.

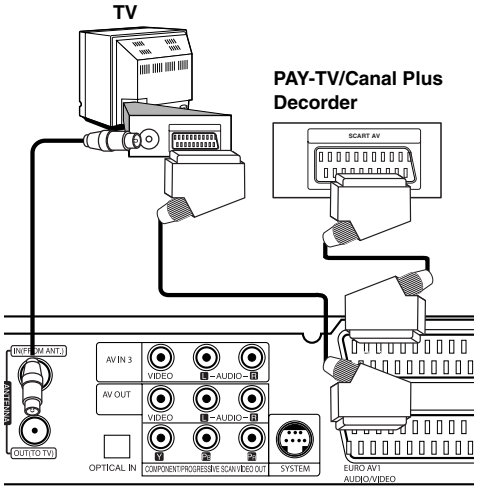

Rear of the HDD/DVD Recorder Receiver

Connecting to the EURO AV2 DECODER jack

Connect a VCR or similar recording device to the EURO AV2 DECODER jack of this recorder.

To watch or record the source from EURO AV2 DECODER jack, set [AV2 Connection] option to [Others] (see page 21).

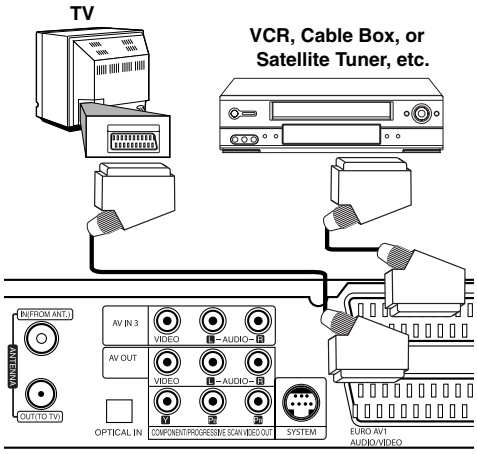

Rear of the HDD/DVD Recorder Receiver

Tip:

You do not need to turn on the recorder to view the signals from the connected tuner on your TV.

Notes:

- Pictures containing copy protection signals that prohibit any copying cannot be recorded.
- If you pass the recorder signals via the VCR, you may not receive a clear image on your TV screen. Be sure to connect your VCR to the recorder and your TV in the order shown below. To watch video tapes, watch the tapes through a second line input on your TV.

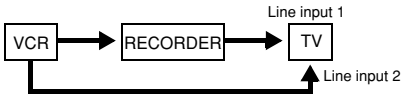

- When you record to a VCR from this recorder, do not switch the input source to TV by pressing the TV/DVD button on the remote.
- If you are using a B Sky B tuner, be sure to connect the tuner's VCR SCART jack to the EURO AV2 DECODER jack.
- If you disconnect the recorder's mains lead, you will not be able to view the signals from the connected VCR or tuner.

Connecting to the AV IN 3 Jacks

Connect the input jacks (AV IN 3) on the recorder to the audio/video out jacks on your accessory component, using audio/video cables.

Jack panel of Accessory Component (VCR, Camcorder, etc.)

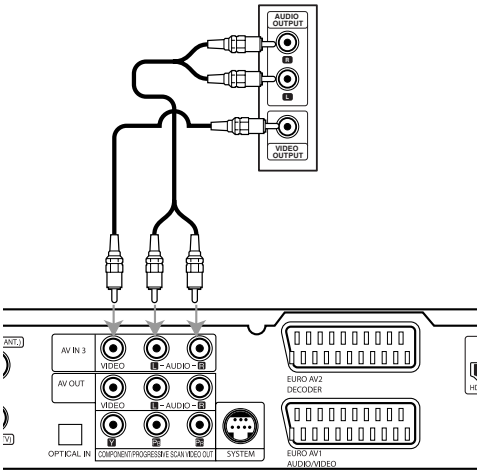

Rear of the HDD/DVD Recorder Receiver

Connecting a Digital Camcorder

Using the front panel DV IN jack, it is possible to connect a DV digital camcorder and digitally transfer DV tapes to DVD.

Use a DV cable (not supplied) to connect the DV in/out jack of your DV camcorder to the front panel DV IN jack of this recorder.

Note:

This jack is for connection to DV digital camcorder only. It is not compatible with digital satellite tuners or D-VHS video decks.

DV Digital Camcorder

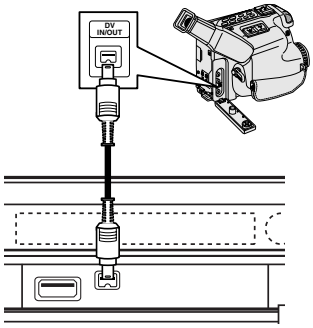

Front of the HDD/DVD Recorder Receiver

Radio Antenna Connections

Connect the supplied FM/AM antennas for listening to the radio.

- Connect the AM loop antenna to the AM antenna connector.
- Connect the FM wire antenna to the FM antenna connector.

Notes:

- To prevent noise pickup, keep the AM loop antenna away from the HDD/DVD Recorder Receiver System and other components.
- Be sure to fully extend the FM wire antenna.
- After connecting the FM wire antenna, keep it as close to horizontal as possible.

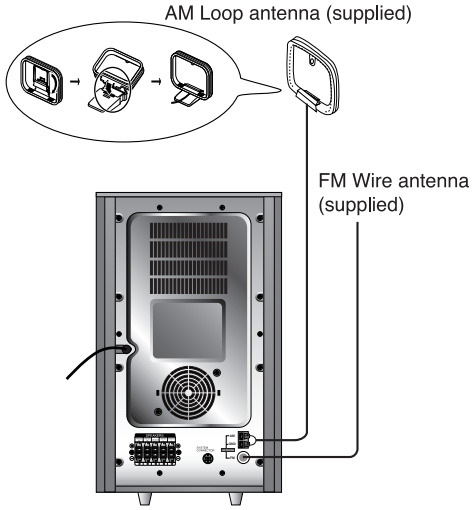

Assembling and Connecting to the Speakers

1. Connect the speaker cables to the appropriate terminals on the bottom of each front and rear speakers.
2. Attach the front and rear speakers to the speaker stands by rotating the screw.

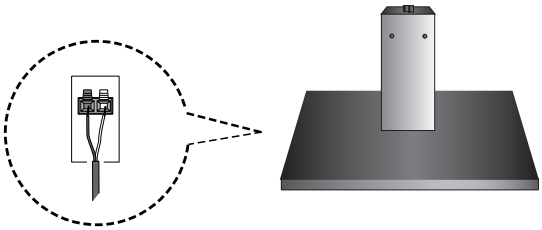

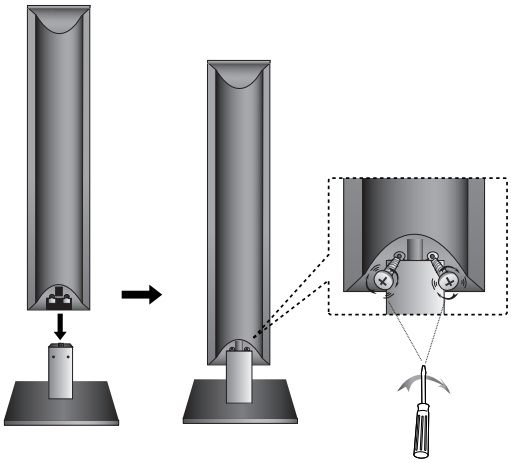

Note:

- If you hold the top of speakers when carrying the speaker, it may cause the separation of speakers. Therefore it might be damaged.

Speaker System Connections

Connect the SYSTEM to the SYSTEM CONNECTOR at the rear of the Active Subwoofer Speaker, using the supplied System cable.

Connect the speakers using the supplied speaker cables.

To obtain the best possible surround sound, adjust the speaker parameters (volume, distance, etc.).

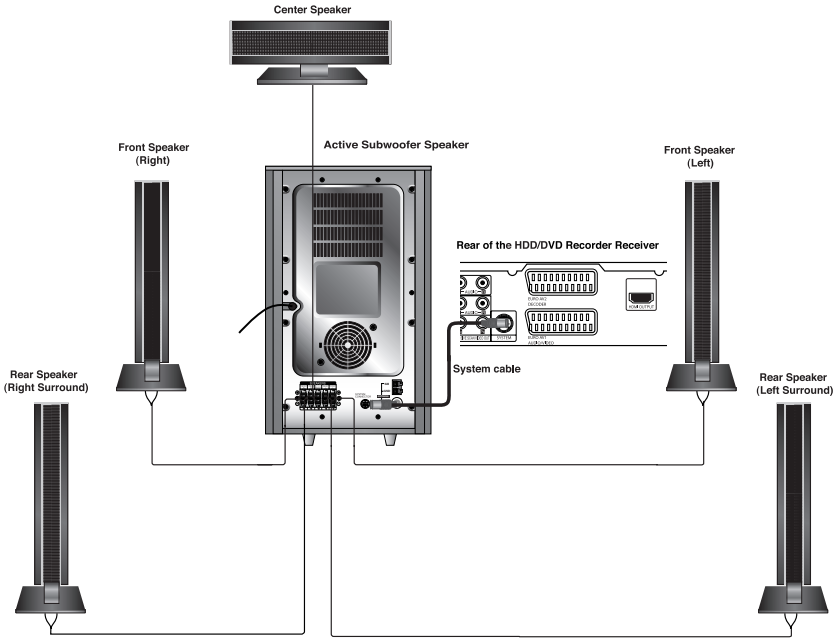

Notes:

- Be sure to match the speaker cable to the appropriate terminal on the components: + to + and – to –. If the cables are reversed, the sound will be distorted and will lack base.
- If you use front speakers with low maximum input rating, adjust the volume carefully to avoid excessive output on the speakers.

About Ferrite Core

Be sure to attach the ferrite core to the system cable. This ferrite core can reduce noises.

How to attach the ferrite core

1. Press the stopper [a] of the ferrite core to open.
2. Wind the system cable once on the ferrite core.
3. Close the ferrite core until it clicks.

Note:

Attach the ferrite core near the unit (Refer to the fig.3 and comment.).

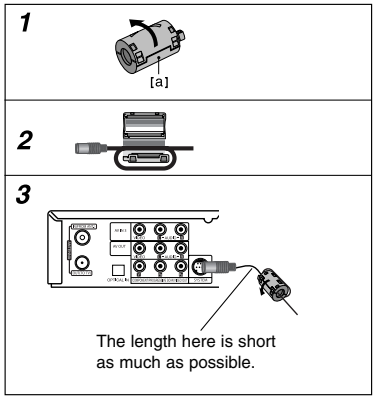

Speaker Positioning

In the case of normal position use the 6 speakers (2 front speakers, 1 center speaker, 2 rear speakers and subwoofer).
If you want to play the excellent bass sound, DTS digital surround or Dolby Digital surround, you should connect a subwoofer.

- **Front speakers**
  According to your listening position set up the speakers for equal distance. And by hearing position set up the interval between speakers to 45 degree.
- **Center speaker**
  The center speaker and front speakers are ideally the same height. But normally place it above or below the television.
- **Rear speakers**
  Place left and right behind the listening area. These speakers recreate sound motion and atmosphere required for surround sound playback. For best results, do not install the rear speakers too far behind the listening position and install them at or above the level of the listener's ears. It is also effective to direct the rear speakers towards a wall or ceiling to further disperse the sound.
  In the case of a smaller room size, if the audience is near to the rear wall set the rear speakers opposite each other, and set the rear speakers above 60 - 90 cm than the listener's ears.
- **Subwoofer**
  This can be placed in any front position.

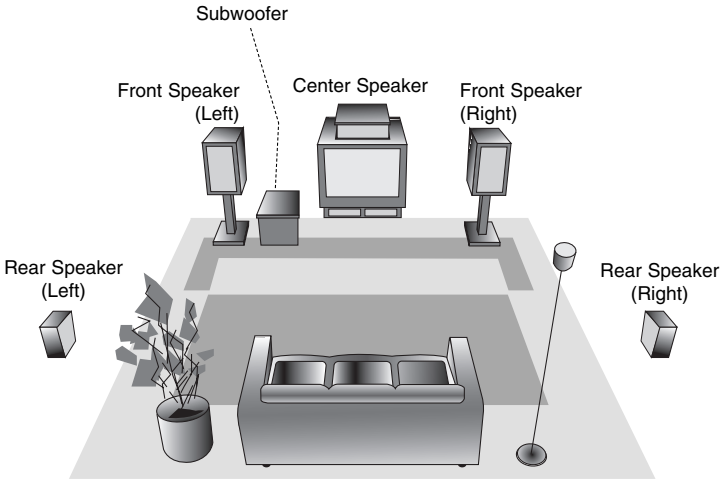

Speaker Positioning Example

XTS/XTS pro

Each time you press **XTS Pro** the setting changes in the following order.

XTS ON → NORMAL → XTS-PRO ON

- XTS ON
  When playing the movie with the weak bass sound relatively to the general music, it enforces the sense of sound at woofer for you to satisfy with. In the mode of 2 CH BYPASS, It creates the high display effect by playing the sound source via the rear speakers same as the front speakers.
- NORMAL
  XTS-Pro and XTS mode turn off
- XTS-PRO ON
  The unique sound quality of the LG Technology creates the optimum sound for you to play the perfect playback of the original sound and to feel the living sound source.

Sound Mode

You can enjoy surround sound simply by selecting one of the pre-programmed sound fields according to the program you want to listen to. (2 ch. sound only)

Press SOUND button repeatedly.

1. PCM
BYPASS → PROLOGIC → MOVIE → MUSIC → MATRIX → HALL 1 → HALL 2 → THEATER → BYPASS...

2. Dolby Digital
BYPASS → PROLOGIC → MOVIE → MUSIC → MATRIX → BYPASS...

Notes:

- Initial sound mode is BYPASS.
- When recording a TV broadcast or external source to the internal hard disk drive (HDD) or disc, the sound recordings are encoded with Dolby Digital.

Controlling Your TV with the Supplied Remote Control

You can control the sound level, input source, and power switch of your LG/GoldStar TV with the supplied remote.

1. While holding down TV POWER button, press PR ▲ or ▼.
2. Release TV POWER button.

You can control your TV using the buttons below.

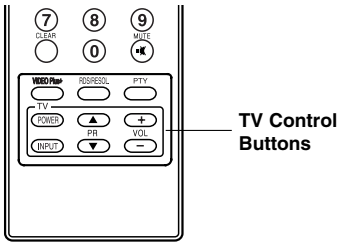

By pressing	You can
POWER	Turn the TV on or off.
INPUT	Switch the TV's input source between the TV and other input sources.
PR ▲/▼	Scans up or down through memorized channels.
VOL +/–	Adjust the volume of the TV.

Note:

When you replace the batteries of the remote, you may have reset the remote control.

Using the Home Menu

From the Home Menu screen you can access all the Media for playback and recording of the recorder.

1. Press HOME to display the Home Menu screen.
2. Use the ◄ / ► buttons to select a main option you want. Sub options appears.
3. Use the ▲ / ▼ and ENTER buttons to select the sub option you want.



4. To exit the HOME menu, press HOME.

TV
- **TV HDD:** Returns to live TV viewing for HDD recording.
- **TV DVD:** Returns to live TV viewing for DVD recording.

MOVIE
- **HDD:** Displays the Title List menu for HDD. (page 46)
- **HDD Divx:** Displays the [Movie List] menu for HDD. (page 31)
- **DISC:**
  - Displays Title List menu for recordable disc (page 46)
  - Displays [Movie List] menu for DivX disc. (page 31)
  - Plays back Video CD or DVD-Video disc (page 27-30).
- **USB Divx:** Displays the [Movie List] for USB device (page 31)

PHOTO (See page 34-35)
- **HDD:** Displays [Photo List] menu for HDD.
- **DISC:** Displays [Photo List] menu for disc.
- **USB:** Displays the [Photo List] for USB device.

MUSIC (See page 32-33)
- **HDD:** Displays [Music List] menu for HDD.
- **DISC:** Displays [Music List] (or Audio CD) menu for disc.
- **USB:** Displays the [Music List] for USB device.

SETUP (See page 19)
- **Start:** Displays Setup menu.

Initial Settings

In this menu system, there are several ways to customize the settings provided. Most menus consist of three levels to set up the options, but some require greater depth for the variety of settings.

General Operation

1. Select SETUP and press ENTER.
2. Use ▲ / ▼ to select the desired option.
3. While the desired item is selected, press ► to move to the second level.
4. Use ▲ / ▼ to select the second desired option.
5. Press ► to move to the third level.
6. Use ▲ / ▼ to select the desired setting then press ENTER to confirm your selection.
   Some items require additional steps.
7. Press RETURN (↶) to exit the Setup menu.

Note:
Press ◄ to go back to the previous level.

General Settings

Auto Programming

This recorder is equipped with a frequency synthesized tuner capable of receiving up to 88 TV channels.

Preparation:
- Connect the recorder to the desired type of aerial, as shown in Connecting to the Aerial on page 10.



1. Select the [Auto Programming] option.
2. Press ► to move to the third level.
   [Start] icon is highlighted.
3. Press ENTER to begin the channel search.
   The tuner will automatically cycle through all available channels in the area and place them in the tuner's memory.

Note:
After you have connected your recorder for the very first time. If you select SETUP for initial setting, you can only set the [Auto Programming] option. Then you can set the other options.

Program Edit

You can edit a channel manually (add, delete, name, move, etc.).

1. Select [Program Edit] option then press ►.
2. Press ENTER while [Edit] is selected.
   The Program List menu appears.

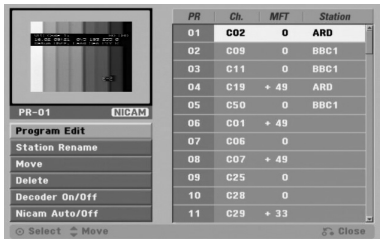

3. Use ▲ / ▼ to select a PR number then press ENTER.
4. Use ▲ / ▼ to select the program option then press ENTER.
   - [Program Edit] Sets the channel manually. See "Program Edit" on the right.
   - [Station Rename] Changes the station name. The display for entering characters appears. To enter characters, see page 50. Names can be up to 5 characters long.
   - [Move] Sorts the programme positions on the Program List. Press ▲ / ▼ to move the selected programme position to a new location.
   - [Delete] Disables a programme position you do not need.
   - [Decoder On/Off] Sets the channels for the decoder. You need this setting to watch or record PAY-TV/Canal Plus programmes. Press ENTER so [Decoder] appears on the display. Press ENTER again to turn off the setting.
   - [Nicam Auto/off] Sets the channels for the NICAM broadcast. Normally, [NICAM] is lit on the display. If the sound from NICAM broadcast is not clear, press ENTER so [NICAM] disappears.
5. Press RETURN (↶) repeatedly to exit Program List menu.

Program Edit

You can perform a search to select and store TV channels manually.
When you select [Program Edit] in step 4 above, the display for setting channels appears.

1. Use ◄ / ► to select the item and press ▲ / ▼ to change the setting.



   - [PR] indicates the selected programme position.
   - [Seek] Searches for a channel automatically. Searching stops when the recorder tunes in a channel.
   - [Ch.] Changes the channel number.
   - [MFT] Fine tunes the channel to obtain a clearer picture.

2. Choose OK then press ENTER to confirm the setting and returns to the Program List menu.

AV1 Decoder

Sets the EURO AV1 AUDIO/VIDEO jack for inputting encoded video signals.

1. Press AV while the Program List menu appears.
2. Press ENTER so [Decoder] appears on the display. Press ENTER again to turn off the setting.
   - Off: Inputs the signals from the EURO AV1 AUDIO/VIDEO jack. Normally select this.
   - On: The encoded video signal input from the EURO AV1 AUDIO/VIDEO jack is output to the EURO AV2 DECODER jack for decoding. The decoded signal is then input back through the EURO AV2 DECODER jack so you can record or view PAY-TV/Canal Plus programmes.

Auto Clock Set

When Channel auto search is completed the actual Time and Date are also set automatically. If the time in the recorder display is not correct, the clock must be set manually.

1. Select [Clock set] option then press ►.
2. Use ▲ / ▼ to select [Auto] option then press ENTER.

Note:
There are cases where the TV station does not send, or sends wrong date and/or time information and the recorder sets the incorrect time.
If this happens, we recommend that you set the clock manually.

Manual Clock Set

1. Select [Clock set] option then press ►.
2. Use ▲ / ▼ to select [Manual] option then press ENTER.
3. Enter the necessary information for date and time.
   ◄ / ► (left/right): Moves the cursor to the previous or next column.
   ▲ / ▼ (up/down): Changes the setting at the current cursor position.
4. Press ENTER to confirm your setting.

TV Aspect

Selects the aspect ratio of the connected TV (4:3 standard or wide).

- [4:3] Select this when connecting to a 4:3 screen TV. When you select [4:3], set [Display Mode] below.
- [16:9] Select this when connecting to a wide-screen TV or TV with a wide mode function.

Display Mode

Selects how to display a wide picture on the screen when [4:3] is selected in [TV Aspect].

- [Letter Box] Displays a wide picture with bands on the upper and lower portions of the screen.
- [Pan Scan] Automatically displays a wide picture on the entire screen and cuts off the portions that do not fit.

Note:
When you set the resolution to 720p or 1080i, TV Aspect and Display Mode are disabled.

AV2 Connection

You can connect a decoder or other device to the EURO AV2 DECODER socket on the back.

- [Decoder] Select [Decoder] if you connect the recorder's EURO AV2 DECODER jack to a PAY-TV or Canal Plus decoder.
- [Others] Select [Others] if you connect the recorder's EURO AV2 DECODER jack to a VCR or similar recording device.

Video Output Format

Select the Video output format option according ro the connection type of this unit

- [YPbPr] When your TV is connected with the COMPONENT/PROGRESSIVE SCAN VIDEO OUT jack on this unit.
- [RGB] When your TV is connected with the SCART(RGB signal) jack on this unit.

Power Save Mode

You can set up the unit into an economic power save mode. Nothing is displayed in the display window when the unit is turned off.

- [OFF] Power Save Mode is not active.
- [ON] Power Save Mode is active.

Notes:
- You should set the clock to operate an economic power save.
- The encoded television signals (CANAL+ or PREMIERE) are not decoded in the Power Save Mode.
- The Power Save Mode is not available in the standby mode for the timer recording and when power off of the unit after receiving the encoded television signals (CANAL+ or PREMIERE).

Initialization

You can reset the recorder to its original factory settings and initialize the HDD.
- [Factory Set] If you need to, you can reset the recorder to all its factory settings. Some options cannot be reset. (Rating, Password, and Area Code)
- [HDD format] Initializes the HDD (Hard Disk Drive): everything recorded on the HDD will be erased.

1. Select [Initialization] option then press ►.
2. Press ▲ / ▼ to select the desired option then press ENTER.
   The confirm message will appear.
3. Use ◄ / ► to select [OK] or [Cancel] then press ENTER.

Language Settings



Display Menu

Select a language for the Setup menu and on-screen display.

Disc Menu/Audio/Subtitle

- [Original]Refers to the original language in which the disc was recorded.
- [Others] To select another language, press number buttons then ENTER to enter the corresponding 4-digit number according to the language code list in the reference chapter (see page 56). If you enter the wrong language code, press ◄.
- [OFF](for Disc Subtitle) : Turn off Subtitle.

Audio Settings



DRC (Dynamic Range Control)

With the DVD format, you can hear a program's soundtrack in the most accurate and realistic presentation possible, thanks to digital audio technology. However, you may wish to compress the dynamic range of the audio output (the difference between the loudest sounds and the quietest ones). Then, you may listen to a movie at a lower volume without losing clarity of sound. Set DRC to [ON] for this effect.

5.1 Speaker Setup

Make the following settings for the built-in 5.1 channel surround decoder.

1. Use ▲ / ▼ to select the [5.1 Speaker Setup] option then press ►.
2. Press ENTER, and the 5.1 Speaker Setup menu appears.
3. Use ◄ / ► to select the desired speaker.
4. Adjust options using ▲ / ▼ / ◄ / ► buttons.
5. Press ENTER to confirm your selection.
6. Press ▲ / ▼ repeatedly to return to the previous menu screen.

Speaker selection

Select a speaker that you want to adjust.
Front Left (Front L) → Center → Front Right (Front R) → Rear Right (Rear R) → Rear Left (Rear L) → SubWoofer

Note:
Certain speaker settings are prohibited by the Dolby Digital licensing agreement.

Size

Since the speaker settings are fixed, you cannot change the settings.

Volume

Press ◄ / ► to adjust the output level of the selected speaker. (-6dB ~ 6dB)

Distance

If you connected speakers to your SubWoofer, setting the Distance lets the speakers know how far the sound has to travel to reach your set listening point. This allows the sound from each speaker to reach the listener at the same time.
Press ◄ / ► to adjust the Distance of the selected speaker. (You can't adjust SubWoofer speaker.)

Test

Press ◄ / ► to test the signals of each speaker. Adjust the volume to match the volume of test signals memorized in the system.
Front Left (Front L) → Center → Front Right (Front R) → Rear Right (Rear R) → Rear Left (Rear L) → SubWoofer

Lock (Parental Control) Settings



Set Password

1. Select [Set Password] option then press ►.
2. To access the Rating, Password and Area Code features, you must input the 4-digit password you created.
   If you have not yet entered a password you are prompted to do so. Input a 4-digit password and press ENTER. Enter it again and press ENTER to verify. If you make a mistake before pressing ENTER, press ◄.
   To change the password, select the [Change], press ENTER and input the old 4-digit password then press ENTER. And input the new 4-digit password then press ENTER.
   Input it again to verify then press ENTER.
   To delete the password, select [Delete] then press ENTER. Input the 4-digit password you created and press ENTER.

If you forget your 4-digit Password

If you forget your password, to clear the current password, follow the procedure below.

1. Display Setup menu then select an 1 level icon.
2. Use the Number buttons to enter the 6-digit number “210499”.
3. Select [OK] then press ENTER. The 4-digit password is cleared. Enter a new password.

Rating

Blocks playback of rated DVDs based on their content. Not all discs are rated.

1. Select [Rating] option then press ►.
2. Follow step 2 as shown “Set Password”.
3. Select a rating using the ▲ / ▼ buttons.
   [1] - [8]: Rating one (1) has the most restrictions and rating eight (8) is the least restrictive.
   [No Limit]: If you select [No Limit], parental control is not active and the disc plays in full.
4. Press ENTER to confirm your rating selection.

Note:

If you set a rating for the recorder, all disc scenes with the same rating or lower are played. Higher rated scenes are not played unless an alternate scene is available on the disc. The alternative must have the same rating or a lower one. If no suitable alternative is found, playback stops. You must enter the 4-digit password or change the rating level in order to play the disc.

Area Code

Enter the code of an area whose standards were used to rate the DVD video disc, referring to the list (See “Area Codes”, page 56.).

1. Select [Area Code] option then press ►.
2. Follow step 2 as shown “Set Password”.
3. Select the first character using the ▲ / ▼ buttons.
4. Shift the cursor using ► buttons and select the second character using ▲ / ▼ buttons.
5. Press ENTER to confirm your area code selection.

DivX Registration Code

We provide you the DivX® VOD (Video On Demand) registration code that allows you to rent and purchase videos using the DivX® VOD service. For more information, visit www.divx.com/vod.

1. Select [DivX(R) VOD] option then press ►.
2. Press ENTER and the registration code will appear.
3. Use the registration code to purchase or rent the videos from Divx® VOD service at www.divx.com/vod. Follow the instructions and download the video onto a disc for playback on this unit.

Note:

All the downloaded videos from DivX® VOD can only be played back on this unit.

Recording Settings



Record Mode Set

You can set the picture quality for recording;
XP (High Quality), SP (Standard Quality),
LP (Low Quality), EP (Extend Quality).

Record Aspect

When DVD recording, you can set the recording aspect ratio to suit the material you're recording (16:9 or 4:3).

Note:

You can only set VR mode formatted DVD-RW disc.

DV Recording Audio

You need to set this if you have a camcorder using 32kHz/12-bit sound connected to the front panel DV IN jack.
Some digital camcorders have two stereo tracks for audio. One is recorded at the time of shooting; the other is for overdubbing after shooting.
On the Audio 1 setting, the sound that was recorded while shooting is used.
On the Audio 2 setting, the overdubbed sound is used.

Auto Chapter

When recording in Video mode, chapter markers are put in specified setting. You can change this interval to 5 minutes, 10 minutes or 15 minutes. If you select [None], switch off automatic chapter marking altogether with the [None] setting.

Timeshift

Set this option to [ON] make this unit to use the Timeshift function automatically without pressing the TIMESHIFT button. The Timeshift function will start automatically about 10 seconds after the TV tuner mode is start.
If you want to use this function manually, see "Timeshift" on page 39.
[ON] Use Timeshift function automatically.
[OFT] Use Timeshift function manually.

Disc Settings

Disc Format

If you load a completely blank disc, the recorder will initialize the disc.

DVD-R: The recorder initialize the disc to Video mode. The recording mode will always be Video mode.

DVD-RW/DVD+RW/DVD+R(DL)/DVD-RAM: The Initialize menu will appear. Select [OK] then press ENTER.

Also, you can reformat the DVD-RW/DVD+RW/DVD-RAM from the Setup menu as below.



1. Select [Disc Format] option then press ►.
2. Press ENTER while [Start] is selected.
   Format Disc menu appears.
3. Use ◄ / ► to select a desired mode (VR Mode or Video Mode) then press ENTER. (Only DVD-RW)
   Confirm message will appear.
   For DVD+RWs, go to step 4.
4. Use ◄ / ► to select [OK] then press ENTER.
   It takes a few moments to initialize the disc.

⚠Caution

If you want to change the disc format, everything recorded on the disc will be erased.

Finalize

Finalizing 'fixes' the recordings in place so that the disc can be played on a regular DVD player or computer equipped with a suitable DVD-ROM drive. Finalizing a Video mode disc creates a menu screen for navigating the disc. This is accessed by pressing MENU/LIST or TITLE.

⚠Caution

- Once you have finalized a DVD-R and DVD+R disc, you cannot edit or record anything else on that disc.
- You can edit or record on the DVD+RW disc even after finalizing.



1. Select [Finalize] option then press ►.
2. Press ENTER while [Finalize] is selected. Finalize menu appears.
3. Select [OK] then press ENTER. The recorder starts finalizing the disc.

Note:

- How long finalization takes depends on the type of disc, how much is recorded on the disc, and the number of titles on the disc.
- DVD+R DL disc can take up to 30 minutes to finalize.

Tips

- If you load a DVD-RW that has already been finalized, you can 'Unfinalize' it by choosing Unfinalize from the Finalize menu. After doing this, you can edit and re-record onto the disc.
- You cannot unfinalize a DVD-R, DVD+R, and DVD+RW disc.
- If [Disc Protect] option is set to [ON], the finalize is not available. To finalize, set [Disc Protect] option to [OFF].

Disc Label

Use this to enter a name for the disc. This name appears when you load the disc and when you display disc information on-screen.

- For discs formatted on a different recorder, you will see only a limited character set.

1. Select [Disc Label] option then press ►.
2. Press ENTER while [Edit] is selected. Keyboard menu appears. To enter characters, see page 50.

Disc Protect

When recording in DVD-RAM / DVD+RW / +R disc or VR mode formatted DVD-RW disc, set to [ON] to prevent accidental recording, editing or deleting of the disc loaded. If you need to unlock the disc to make edits, select [OFF].

PBC

PBC stands for Playback Control and refers to special menus and navigation features that are available on some Video CDs.

- [ON] Video CDs are played according to the PBC, if available.
- [OFF] Video CDs are played the same way as Audio CDs.

General Explanation of On-Screen Display

This manual gives basic instructions for operating the recorder. Some DVDs require specific operation or allow only limited operation during playback. When this occurs, the symbol ⊘ appears on the TV screen, indicating that the operation is not permitted by the recorder or is not available on the disc.

Displaying Information While Watching TV

During viewing the TV, press ENTER or DISPLAY to display/remove the information displayed on-screen.

Indicates channel number, station name, and audio signal (STEREO, MONO) received by the tuner.

Indicates HDD or DVD mode.

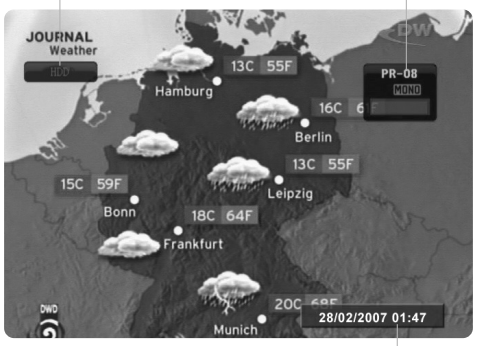

Indicates current date and time.

Displaying Disc Information on-screen

You can display various information about the disc loaded on-screen.

1. Press DISPLAY to show various playback information.
   The items displayed differ depending on the disc type or playing status.



2. You can select an item by pressing ▲ / ▼ and change or select the setting by pressing ◄ / ►. For details about each item, see the pages in parentheses.
   - [Title]: Current title (or track) number/total number of titles (or tracks)
   - [Chapter]: Current chapter number/total number of chapters
   - [Time]: Elapsed playing time (page 29)
   - [Audio]: Selected audio language (DVD VIDEO only) or audio channel (page 28)
   - [Subtitle]: Selected subtitle (page 28)
   - [Angle]: Selected angle/total number of angles (page 29)

Note:

If no button is pressed for 10 seconds, the on-screen display disappears.

Playback

General Playback Features

1. Load your chosen disc in the tray, with the playback side down.
2. Starts playback using HOME menu (see page 19).
3. To stop the playback, press STOP (■).
   The unit records the stopped point, depending on the disc. "▮▮■" appears on the screen briefly.
   Press PLAY (►) to resume playback (from the scene point). If you press STOP (■) again or unload the disc ("■" appears on the screen.), the unit will clear the stopped point.
4. Press OPEN/CLOSE (⏏) to remove the disc.
   Press OPEN/CLOSE (⏏) to close disc tray or press POWER (⏻), the disc tray closes automatically and unit turns off.

Note:
If Parental Control is set and the disc is not within the Rating settings (not authorized), the 4-digit code must be entered and/or the disc must be authorized (see "Rating", on page 23).

Buttons	Operations	Discs
OPEN / CLOSE (⏏)	Opens or closes the disc tray.	All Discs
PAUSE/STEP (▮▮)	During playback, press PAUSE/STEP (▮▮) to pause playback.	All Discs
	Press PAUSE/STEP (▮▮) repeatedly to play Frame-by-Frame.	HDD DVD ALL VCD DivX
SKIP (I◄◄ / ►►I)	During playback, press SKIP (I◄◄ or ►►I) to go to the next chapter/track or to return to the beginning of the current chapter/track. Press SKIP I◄◄ twice briefly to step back to the previous chapter/track. ***Tips:*** • To go directly to any chapter during DVD playback, press DISPLAY and press ▲ / ▼ to select the chapter icon. Then, input the chapter number or use ◄ / ►. • On an Audio CD, to go directly to any track, enter the track number using the numbered buttons (0-9) during playback.	HDD DVD ALL VCD DivX ACD MP3 WMA
SCAN (◄◄ / ►►)	During playback, press SCAN (◄◄ or ►►) repeatedly to select the required scan speed. HDD, DVD, DivX; 4 steps Video CD, Audio CD; 3 steps	HDD DVD ALL VCD DivX ACD
	While the playback is paused, press SCAN (◄◄ or ►►) repeatedly to play in slow motion. HDD, DVD; 4 steps DivX; 4 steps (Forward only) Video CD; 3 steps (Forward only)	HDD DVD ALL VCD DivX

General Playback Features (Continued)

Buttons	Operations	Discs
REPEAT	During playback, press REPEAT repeatedly to select a desired repeat mode. HDD, DVD, VR mode DVD-RW (Title/Chapter/Off) Video CD, DivX (Title/ALL/Off) Audio CD, MP3/WMA (TRACK/ALL/(OFF)) ***Notes:*** • On a Video CD with PBC, you must set PBC to [OFF] in the Setup menu to use the Repeat function. See page 25. • If you press SKIP (▶▶I) once during Repeat Chapter (Track) playback, the repeat playback cancels.	HDD DVD ALL VCD ACD MP3 WMA DivX
A-B	During playback, each press of A-B button to select point A and point B and repeats a sequence from point A (Starting point) to point B (End point). ***Note:*** During HDD playback, you cannot select a sequence less than 4 seconds.	HDD DVD ALL VCD ACD MP3 WMA DivX
TITLE	If the current DVD title has a menu, the title menu appears on the screen. Otherwise, the disc menu may appears.	DVD
MENU/LIST	The disc menu appears on the screen.	DVD
SUBTITLE ( )	During playback, press SUBTITLE ( ) then press ◄ / ► repeatedly to select a desired subtitle language.	DVD DivX
AUDIO ( )	Press AUDIO ( ) then press ◄ / ► repeatedly to hear a different audio language or audio track.	DVD DivX
	Press AUDIO ( ) then press ◄ / ► repeatedly during playback to hear a different audio channel (STEREO, LEFT or RIGHT). With DVD-RW discs recorded in VR mode and HDD that have both a main and a Bilingual audio channel, you can switch among Main (L), Sub (R), or Main+sub (L+R).	HDD -RW VR -RW Video RAM +RW -R +R VCD DivX
INSTANT SKIP	Press INSTANT SKIP repeatedly during playback to skip forward 15 seconds. In Timeshift mode, each press ◄ / ► skips forward or reverse 5 minutes.	HDD DVD ALL

If a menu screen is displayed DVD VCD

The menu screen may be displayed first after loading a DVD or Video CD which contains a menu.

DVD

Use the ◄ / ► / ▲ / ▼ buttons to select the title/chapter you want to view, then press ENTER to start playback.
Press TITLE or MENU/LIST to return to the menu screen.

VCD

- Use the number buttons to select the track you want to view.
  Press RETURN (↶) to return to the menu screen.
- Menu setting and the exact operating procedures for using the menu may differ depending on the disc. Follow the instructions on the each menu screen. You may also set PBC to [OFF] under Setup menu (see page 25).

Moving to another TITLE HDD -RWVR -RWVideo RAM +RW -R +R DVD DivX VCD

When a disc has more than one title, you can move to another title as follows:

- Press DISPLAY during playback then use ▲ / ▼ to select the title icon. Then, press the appropriate numbered button (0-9) or ◄ / ► to select a title number.

Note:
On a Video CD with PBC, you must set PBC to OFF in the Setup menu. See page 25

Time Search HDD -RWVR -RWVideo RAM +RW -R +R DVD DivX VCD

To start playing at any chosen time on the disc:

1. Press DISPLAY during playback. The time search box shows the elapsed playing time.
2. Press ▲ / ▼ to select the time clock icon and "--:--:--" appears.
3. Input the required start time in hours, minutes, and seconds from left to right.
   To cancel the inputting, press CLEAR.
4. Press ENTER to confirm. Playback starts from the selected time.

Note:
On a Video CD with PBC, you must set PBC to OFF in the Setup menu. See page 25

Marker Search -RWVR -RWVideo RAM +RW -R +R DVD DivX VCD

To enter a Marker

You can start playback from up to nine memorized points. To enter a marker, press MARKER at the desired point on the disc during playback. The Marker icon appears on the TV screen briefly. Repeat to enter up to nine markers.

To Recall or Clear a Marked Scene

1. During disc playback, press SEARCH. The marker search menu appears on the screen.
2. Within 5 seconds, press ◄ / ► to select a marker number that you want to recall or clear.
3. Press ENTER and playback starts from the marked scene. Or, press CLEAR and the marker number is erased from the list.

Camera Angle DVD

If the disc contains scenes recorded at different camera angles, you can change to a different camera angle during playback.

1. Press DISPLAY during playback.
   The On-Screen Display appears on the TV screen.
2. Use ▲ / ▼ to select the Angle icon in the On-Screen Display.
3. Use ◄ / ► to select a desired angle.
   The number of the current angle appears on the TV screen.

Last Condition Memory DVD VCD

This recorder memorizes the user settings for the last disc that you have viewed. Settings remain in memory even if you remove the disc from the recorder or switch off the recorder. If you load a disc that had its settings memorized, the latest stop position is automatically recalled.

Notes:

- Settings are stored in memory for use any time.
- This recorder does not memorize settings of a disc if you switch off the recorder before commencing to play it.

PIP (Picture in Picture) HDD -RWVR -RWVideo +RW -R +R DVD VCD RAM

This function enables you to view the stored stations in sub picture during playback.

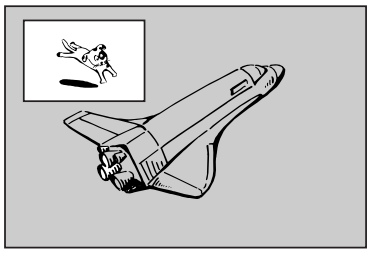

On and off

Press PIP to switch on the sub picture, press this button again to switch it off.

Input mode selection for sub picture

Press AV to select the input mode for the sub picture. Each time this button is pressed, each input mode for the sub picture is displayed as shown below.

Tuner → AV1 → AV2 → AV3

Program selection for sub picture

Use ▲ / ▼ to change the program when sub picture's input is set to tuner. The selected program number is displayed on the TV screen. You can view the selected program by pressing STOP (■).

Sub picture position change

Press ◄ / ► repeatedly until desired position is achieved. The sub picture moves clockwise or counterclockwise.

Playing a DivX Movie File

The recorder can play DivX files. Before playing DivX files, read “DivX file requirement” on right.

1. Press HOME then select [MOVIE] option.
2. Select a media that contains DivX file(s) then press ENTER.
   The [Movie List] menu appears on the TV screen.



3. Press ▲ / ▼ to select a folder, and press ENTER.
   A list of files in the folder appears. If you are in a file list and want to return to the Folder list, use the ▲ / ▼ buttons on the remote to highlight .. and press ENTER.
4. If you want to view a DivX movie file, press ▲ / ▼ to highlight a file and press PLAY (►).
   You can use variable playback functions. Refer to pages 27-29.
5. Press STOP to stop the playback. The [Movie List] menu appears.

Notice for displaying the DivX subtitle

If the subtitle does not display properly, please follow the steps below.

1. Press PAUSE/STEP when the subtitle appears.
2. Press and hold SUBTITLE about 5 seconds.
   The language code will appear.
3. Press SUBTITLE to select another language code until the subtitle is displayed properly.
4. Press PLAY (►) to continue playback.

Movie List menu options

1. Press ▲ / ▼ to select a folder/file on the [Movie List] menu then press ENTER.
   [Movie List] menu options appear.
   The menu options displayed differ depending on the selected media.
2. Press ▲ / ▼ / ◄ / ► to select an option, and press ENTER.
   - [Play] Start playback the selected title.
   - [Open] Opens the folder and a list of files in the folder appears.
   - [Delete] Deletes the file(s) or folder(s) from the HDD.
   - [Rename] Edits the file name. (page 36)
   - [Move] Moves the file(s) to another folder or HDD. (page 37)
   - [Copy] Copies the file(s) to another folder or HDD. (page 37)

DivX file requirement

Available resolution size: 720x576 (W x H) pixel
DivX file extensions: “.avi”, “.divx”
Playable DivX subtitle: “.smi”, “.srt”, “.ssa”, “.sub (Micro DVD format)”, “.txt (Micro DVD format)”
Playable Codec format: “DIV3”, “DIVX”, “DX40”, “DX50”, “3ivx”, “MP4V2”, “MP4V3”
Playable Audio format: “AC3”, “PCM”, “MP3”, “DTS”
- Sampling frequency:
  within 32 - 48 kHz (MP3)
- Bit rate:
  within 32 - 320kbps (MP3)

CD-R Format: ISO 9660 and JOLIET.
DVD±R/RW Format: ISO 9660 (UDF Bridge format)
Maximum Files/Disc: Less than 999 (total number of files and folders)
Notes on DivX format
- If the number of the screen frame is over 29.97 frames per second, this unit may not operate normally.
- If the video and audio structure of recorded file is not interleaved, returns to the menu screen.

Playing an Audio CD or MP3/WMA file

The recorder can play audio CDs and MP3/WMA files. Before playing MP3/WMA files, read “MP3/WMA audio file requirement” on right.

1. Press HOME.
   The HOME menu appears.
2. Select [MUSIC] option.
3. Select a media that contains MP3/WMA or audio title then press ENTER.
   The [Music List] menu appears on the TV screen.

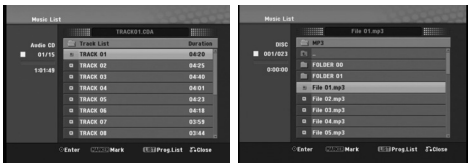

4. Use ▲/▼ to select a track then press PLAY (►).
   Playback starts.
   You can use variable playback functions. Refer to pages 27-28.

Tips:

- Press DISPLAY to view ID3-Tag information for the MP3 file. If ID3-Tag information is not present, [ID3-Tag: None] will appear. Press DISPLAY again to remove the information screen.
- If you want to move to the upper directory, use the ▲ / ▼ to highlight .. and press ENTER.
- You also display HOME menu to select another media by pressing HOME.

5. To stop playback at any time, press STOP.

Audio CD and Music menu options

1. Press ▲ / ▼ to select a folder/file on the Audio CD or Music menu then press ENTER.
   The menu options appear.
   The menu options displayed differ depending on the selected media.
2. Press ▲ / ▼ / ◄ / ► to select an option, and press ENTER.
   - [Play] Start playback the selected title.
   - [Random] Start or stop random playback.
   - [Open] Opens the folder and a list of files in the folder appears
   - [Delete] Deletes the file(s) or folder(s) from the HDD.
   - [Rename] Edits the file name. (page 36)
   - [Move] Moves the file(s) to another folder or HDD. (page 37)
   - [Copy] Copies the file(s) to another folder or HDD. (page 37)
   - [Prog. add] Adds the track(s) to Program List. (page 33)
   - [Ripping] Rips audio tracks from your Audio CDs and store them as MP3 files in the hard disk. (page 45)

Random

1. Press ▲ / ▼ to select a file then press ENTER.
   The menu options appear.
2. Press ▲ / ▼ to select [Random] option then press ENTER.
   The unit automatically begins random playback and “RANDOM” appears on the menu screen.
3. To return to normal playback, select [Random] option again then press ENTER.

Tip:

By pressing SKIP ►►I during Random playback, the unit selects another track and resumes Random playback.

MP3/WMA audio file requirement

File extensions
“.mp3”, “.wma (v2, v4, v7, v8 available)”.

Sampling frequency:
within 32 - 48 kHz (MP3), within 8 - 48kHz (WMA)

Bit rate:
within 32 - 320kbps (MP3), 5 - 192kbps (WMA)

CD-R Format:
ISO 9660 and JOLIET.

DVD±R/RW Format:
ISO 9660 (UDF Bridge format)

Maximum Files/Disc:
Less than 999 (total number of files and folders)

Program Playback with Audio CD and MP3/WMA file

Program Playback enables you to make custom playlists of Audio CD or MP3/WMA tracks. Programs can contain up to 99 Audio CD tracks or 256 MP3/WMA files.

1. Use ▲ / ▼ to select a track/file (or folder) on the Audio CD or Music menu.

   Selecting multiple files/tracks (folders)

   1. Press MARKER.
   A check mark appears on the file/track or folder. Press MARKER again to cancel the marked file/track or folder.

   2. Repeat step 1 to mark additional file/track (folders).

2. Press ENTER.
   The options appear on the left side of the menu.
3. Use ▲ / ▼ to select the [Prog. add] option then press ENTER.
4. Repeat steps 1-3 to mark additional tracks.

Note:

If you select a folder for Programmed Playback, all tracks/files in the folder are added to the Program List.



5. Use ► to move to the Program list.
   The programmed track you selected last is highlighted on the program list.
6. Use ▲ / ▼ to select the track you want to start playing.
7. Press PLAY (►) to start.
   Playback stops after playing the last programmed track in the program list.
8. To exit Program Playback and resume normal playback, select a track on the List and press PLAY (►).

Tips:

- You can access or remove the Program list screen by pressing MENU/LIST.
- You can not remove the Program list screen during the programmed playback and the programmed ▮▮■.

Program List menu options

1. Press ▲ / ▼ to select a track/file on the Program List then press ENTER.
   The menu options appear.

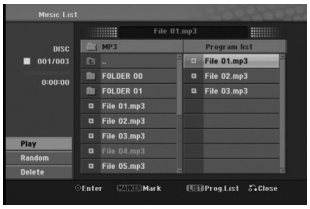

2. Use ▲ / ▼ to select an option then press ENTER to confirm your selection.
   - [Play] Playback begins in the order in which you programmed the tracks from the selected track.
   - [Random] Start or stop random playback.
   - [Delete] Deletes the track(s) from the Program List menu.

Repeat Programmed Tracks

Press REPEAT to select the desired Repeat mode.
- [TRACK] Repeats the current track.
- [ALL] Repeats all tracks on the Program List.
- [OFF] Cancels Repeat mode (no display).

Erasing a Track from the Program List

1. Select the track you wish to erase from the Program List. Use MARKER button to select multiple tracks.
2. Press ENTER. The menu options appears
3. Select [Delete] option then press ENTER.

Viewing a JPEG File

This unit can play JPEG files. Before playing JPEG recordings, read “Photo file requirement” on right.

1. Press HOME.
   The HOME menu appears.
2. Select [PHOTO] option.
3. Select a media that contains JPEG file then press ENTER.
   The [Photo List] menu appears on the TV screen.



4. Use ▲ / ▼ to select a file, then press ENTER.
   The menu options appear on the left side of the menu.

Tips:

- If you want to move to the upper directory, use the ▲ / ▼ to highlight .. and press ENTER.
- You can also display HOME menu to select another media by pressing HOME.

5. Use ▲ / ▼ to select [Full Screen] then press ENTER.
   The selected image is displayed in full screen.
   Depending upon the size and number of JPEG files, it could take a long time for the recorder to read the files.

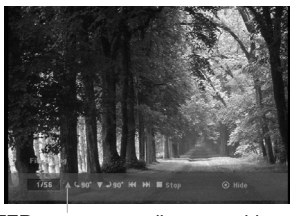

Press ENTER to appear or disappear this menu during viewing the full screen.

6. To stop viewing at any time, press STOP.
   The [Photo List] menu appears.

Photo List menu options

1. Press ▲ / ▼ to select a file on the [Photo List] menu then press ENTER.
   The menu options appear.
   The menu options displayed differ depending on the selected media.

   Selecting multiple files (folders)

   1. *Press MARKER.*
      A check mark appears on the file or folder.
      Press MARKER again to cancel the marked file or folder.
   2. *Repeat step 1 to mark additional file (folders).*

2. Use ▲ / ▼ to select an option then press ENTER to confirm your selection.
   - [Open] Opens the folder and a list of files in the folder appears
   - [Full Screen] Shows the selected file as full screen.
   - [Delete] Deletes the file(s) or folder(s) from the HDD.
   - [Slide Show] Displays Slide Show menu.
   - [Rename] Edits the file name. (page 36)
   - [Move] Moves the file(s) to another folder or HDD. (page 37)
   - [Copy] Copies the file(s) to another folder or HDD. (page 37)

Photo file requirement

File extensions
“.jpg”

Photo size:
Less than 4MB recommended

CD-R Format:
ISO 9660 and JOLIET.

DVD±R/RW Format:
ISO 9660 (UDF Bridge format)

Maximum Files/Disc:
Less than 999 (total number of files and folders)

Notes on JPEG file
Progressive and lossless compression JPEG image files are not supported.

Skip Images

While viewing a picture, press SKIP (I◀◀ or ▶▶I) once to advance to the next file or return to the previous file.

Rotate Images

Use ▲ / ▼ while viewing a picture to flip the picture clockwise or counterclockwise.

View Slide Shows

Slide show will automatically go to next picture at a specified interval.

1. Select [Slide Show] option on the [Photo List] menu (Refer to “Photo List menu options” on page 34).
2. Press ENTER.
   The Slide Show menu appears.

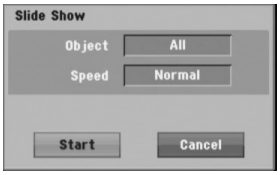

3. Use ◄ / ► / ▲ / ▼ to set the options.
   [Object] option:
   - [Selected] Views slide show only selected files with MARKER button. Use the MARKER button to select multiple files.
   - [All] Views slide show all files.

   [Speed] option:
   Sets the Slide Show speed to [Slow], [Normal], or [Fast].
4. Select the [Start] option then press ENTER to start the Slide Show.
5. Press STOP to stop the Slide Show and returns to the [Photo List] menu.

To Pause the Slide Show

1. Press PAUSE/STEP (❚❚) to pause slide show.
2. When you want to continue slide show, press ❚❚ or PLAY (►).

Editing a MP3/WMA, JPEG, DivX file

These descriptions are MP3 file's operation for example, other kind's files are operated same way.

Note:

- The MP3/WMA, JPEG, and DivX files on the disc or HDD cannot be copied or moved to USB device.

Erasing a file(s)/folder(s) from the HDD

You can erase MP3/WMA, JPEG or DivX file(s)/ folder(s) on the HDD.

1. Select a file you wish to erase on the menu.

   Selecting multiple files (folders)

   1. *Press MARKER.*
      A check mark appears on the file or folder.
      Press MARKER again to cancel the marked file or folder.
   2. *Repeat step 1 to mark additional file (folders).*

2. Press ENTER.
   The menu options appear on the menu.



3. Select [Delete] option then press ENTER.
   Select [OK] option then press ENTER.
   The selected file(s) is deleted.

Naming a file on the HDD

You can name the files on the HDD independently.

1. Select a file you wish to rename on the menu.
2. Press ENTER.
   The menu options appear on the menu.
3. Select [Edit] option then press ENTER.
   Edit options appears.



4. Select [Rename] option then press ENTER.
   Keyboard menu appears.
   To enter characters, see page 50.



Copying a file(s) to HDD or folder

You can copy a file(s)/folder(s) to HDD or folder.

1. Select a file you wish to copy on the menu.

   Selecting multiple files (folders)

   1. Press MARKER.
   A check mark appears on the file or folder.
   Press MARKER again to cancel the marked file or folder.

   2. Repeat step 1 to mark additional file (folders).

2. Press ENTER.
   The menu options appear on the menu.
3. Select [Edit] option then press ENTER.
   Edit options appears.
4. Select [Copy] option then press ENTER.
   Copy menu appears.



5. You can select a album (folder) to copy.
   Select a album (folder).
   Also, you can create new album (folder). Select [New Album] option on the Copy menu then press ENTER.
   "NONAME###" folder is created.
6. Select [Copy] option then press ENTER to begin copying.



Note:
If a folder's depth is more than 5 level, the copy is not available.

Moving a file(s)

You can move a file(s)/folder(s) to HDD or folder. After moving, the file(s)/folder(s) are deleted from the current location.

1. Follow steps 1-3 as shown left.
2. Press ENTER.
   The options appear on the left side of the menu.
3. Select [Move] option then press ENTER.
   Move menu will appear.



4. You can select a album (folder) to move.
   Select a album (folder).
   Also, you can create new album (folder). Select [New Album] option on the Move menu then press ENTER.
   "NONAME###" folder is created.
5. Select [Move] option then press ENTER to begin moving.



Recording

About DVD recording

Notes:

- This recorder cannot make recordings on CD-R or CD-RW discs.
- Our company takes no responsibility for recording failure due to power outages, defective discs, or damage to the Recorder.
- Fingerprints and small scratches on a disc can affect playback and/or recording performance. Please take proper care of your discs.

Disc types and recording formats, modes, and settings

This recorder can play six different kinds of DVD discs: pre-recorded DVD-Video discs, DVD-RW, DVD-R, DVD-RAM, DVD+RW and DVD+R discs. The disc format for DVD-R, DVD+R, DVD+RW discs is always "Video format"—the same as pre-recorded DVD-Video discs. This means that once finalized, you can play a DVD-R, DVD+R, or DVD+RW in a regular DVD player. The DVD-RAM disc format is Video Recording (VR) format.
The recording mode is closely related to the disc format. If the disc format is Video Recording format, then the recording mode is VR mode; if the disc format is Video mode, then the recording mode is Video mode (except for DVD-Video, which is not recordable, and so does not have a recording mode). Within the recording modes (which are fixed for them whole disc) are the record settings. These can be changed as required for each recording and determine the picture quality and how much space the recording will take up on the disc.

About HDD recording

Recording to the internal hard disk drive (HDD) is basically similar to recording to a VR mode DVD-RW disc. You have the full choice of recording quality options, including the manual mode, and of course you can record, erase and re-record as many times as you like. The capacity of the hard disk drive means that you can store many hours of video on it, even in the higher quality recording modes.

Notes:

- The maximum number of titles that can be recorded on the HDD is 999.
- Using the HDD allows you to record a maximum of 12 hours continuously.

Notes for recording

- The recording times shown are not exact because the recorder uses variable bit-rate video compression. This means that the exact recording time will depend on the material being recorded.
- When recording a TV broadcast, if the reception is poor or the picture contains interference, the recording times may be shorter.
- If you record still pictures or audio only, the recording time may be longer.
- The displayed times for recording and time remaining may not always add up to exactly the length of the disc.
- The recording time available may decrease if you heavily edit a disc.
- If using a DVD-RW disc, make sure you change the recording format (Video mode or VR mode) before you record anything on the disc. See page 24 (Disc Format) for how to do this.
- When using a DVD-R or DVD+R disc, you can keep recording until the disc is full, or until you finalize the disc. Before you start a recording session, check the amount of recording time left on the disc.
- When using a DVD+RW disc, recording time available will only increase if you erase the last title recorded on the disc.
- The Delete Title option in the Title List (Original) menu only hides the title, it does not actually erase the title from the disc and increase the recording time available (except for the last recorded title on a DVD-RW disc in Video mode).
- Overwrite recording is available using DVD+RW discs.
- When using a DVD+R/RW, the recorder will execute the Menu-making operation to update the new title and editing when removing the disc from the recorder or turn off the recorder. So you must remove the disc after selecting the recorder's operation mode to DVD mode.

Recording time and picture quality

There are four preset recording quality modes:

- **XP** – Highest quality setting, gives about 1 hour of recording time on a DVD (4.7GB).
- **SP** – Default quality, sufficient for most applications, gives about 2 hours of recording time on a DVD (4.7GB).
- **LP** – Slightly lower video quality, gives about 4 hour of recording time on a DVD disc (4.7GB).
- **EP** – Lowest video quality, gives about 6 hour of recording time on a DVD (4.7GB).
  You may see a fragmented picture during playing back the contents recorded in EP mode.

Timeshift HDD

Do not miss a scene from a live broadcast. If the telephone rings while you are watching your favorite live broadcast, just press TIMESHIFT and PAUSE/STEP before answering the phone.
The timeshift function will be activated and the broadcast is then recorded for later viewing.
After the phone call or viewing interruption, press PLAY (▶) or SCAN (◀◀/▶▶) to watch the program.
Press STOP (■) to return to the live broadcast.

Timeshift (Pause, Live TV/Playback) Operation HDD

You can store a program in the HDD storage cache temporarily.

Press TIMESHIFT while watching a TV program.
The Progress Bar display appears on the screen as shown below. The Progress Bar changes to timeshift icon after 10 seconds.



1. Indicates playback mode.
2. Indicates current Timeshift position.
3. Indicates Timeshift start time.
4. Indicates Timeshift elapsed time.
5. Indicates the time that is one hour from Timeshift start time.

Tip:
You can use trick play functions (Slow, Scan, etc.) during timeshift. Refer to Playback Operation on page 27-28.

Note:
- After 3 hours, the Timeshift will stop automatically.
- The Timeshift is not available during timer recording.
- The changing a programme or an external input are not available during the Timeshift.
- After setting [Timeshift] to [ON], if you press HDD/DVD (on the front panel), HOME or MENU/LIST during the Timeshift, the Timeshift will stop.

Clip Record HDD

You can edit during Timeshift to store the program on the HDD (Hard Disk Drive).

1. During Timeshift, use pause step, search and slow-motion to find the starting point.
2. Press REC at the starting point of the section you want to record.
   Progress of the edit is indicated in red on the Progress Bar.



3. Use pause step, search and slow-motion to find the ending point.
4. Press REC or STOP at the ending point of the section you want to stop recording.
   Normal playback continues.



5. Press STOP to stop Timeshift.
   Confirm message will appear.
6. Use ◀ / ▶ to select [Yes] then press ENTER. Or, press STOP again.
   The current broadcast is displayed on the screen.

Notes:
- The last selected section is only recorded on the HDD.
- If you want to stop Clip recording, press the STOP button. If you press POWER to stop Clip recording, the program may not be recorded on the HDD.
- Clip records cannot be made for sections lasting less than 4 seconds.
- Clip records are recorded only with XP mode.

Jump to Start or End during Timeshift

1. Press ENTER during timeshift. The menu will appear.
2. Press ◀ and playback starts from the very beginning of the timeshift.
   Press ▶ and jumps to the very end of the timeshift then goes to pause mode.

To Exit the Timeshift

1. Press STOP to exit Timeshift function.
   Confirm message will appear.
2. Use ◀ / ▶ to select [Yes] then press ENTER.
   The current broadcast is displayed on the screen.

Basic Recording from a TV

Follow the instructions below to record a TV program. Recording starts immediately and continues until the disc is full or you stop the recording.

Note:
You must load a recordable disc for DVD recording.

1. Press HOME.
   The HOME menu appears.
2. Select [TV] option.
3. Select [TV HDD] or [TV DVD] option then press ENTER.
   Also make sure that the TV input is set to this recorder.
   If you load a completely blank disc, the recorder takes a short while to initialize the disc.
4. Set a recording mode as necessary by pressing REC MODE repeatedly. (XP, SP, LP, EP)
5. Use ▲ / ▼ buttons to select the TV channel to record.

Changing TV Audio Channel
You can select the audio channel (language) to listen by pressing AUDIO during viewing TV program. The current audio channel is displayed on-screen.

Stereo broadcast:
Stereo → Left → Right

Bilingual broadcast:
Main → Sub → Main+Sub

- If the sound is of poor quality when set to Stereo, you can often improve it by changing to Mono (Left or Right).
- This recorder can record either NICAM or regular audio. If the NICAM setting (page 20) is set to Auto, then if the broadcast is NICAM, the audio automatically changes to NICAM and you can record the NICAM audio. If the broadcast is non-NICAM, the regular audio is always recorded.
  If NICAM sound distortion occurs, due to poor reception, you can switch off NICAM setting of the program.
- If you record and then play back Mono broadcasting, you can select the audio channel. But in that case, it will not work and the output will operate with Mono.
- Only when you record with Stereo or Main+Sub mode, you can play back with Stereo or Main+Sub.

6. Press REC (●) once.
   Recording will start. (The REC indicator lights in the display window.)
   - Recording continues until you press STOP (■) or the disc or HDD is full.
   - To record for a fixed length of time, see Instant Timer Recording on right.
7. Press STOP (■) to stop recording.

To Pause the Recording

1. Press PAUSE/STEP (❚❚) to pause recording.
2. When you want to continue recording, press PAUSE/STEP (❚❚).

To record one TV program while watching another

1. Press TV/DVD to select the TV mode during recording. The TV indicator appears.
2. Using the TV, select the channel to be viewed.

Instant Timer Recording

Instant Timer Recording allows you to make a recording easily of a preset length without using the program timer.

1. Follow steps 1-5 as shown left (Basic Recording from a TV).
2. Press REC (●) repeatedly to select the recording time length.

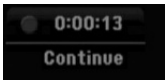

   Recording starts after the first press. Each subsequent press increases the recording time within free space.
   The recording time is displayed on the TV screen.
   At the end of the recording, the recorder will stop recording and shut off.

Checking the Recording Time

Press REC (●) once to check the recording time. The recalled setting will automatically return to the TV screen for a moment.
Also, remaining time of recording is shown in the display window.

To Extend the Recording Time

The recording time can be extended anytime by pressing REC (●).
Each subsequent press increases the recording time within free space.

⚠Caution
If the recorder is unplugged (or there is a power failure) while the recorder is recording, the recording will be lost.

Timer Recording

This recorder can be programmed to record up to 16 programs within a period of 1 month. For unattended recording, the timer needs to know the channels to be recorded, the starting and ending time.

Note:

If you use a completely blank disc for timer recording, you must format the disc before starting timer recording. (Refer to "Disc Format" on page 24.)

1. Press TIMER REC.
   The Timer Record menu will appear.



   - [Media] Choose a media to record (HDD or DVD).
   - [PR] Choose a memorized program number, or one of the external inputs from which to record. (You cannot select DV input.)
   - [Date] Choose a date up to 1 month in advance.
   - [Start Time] Set the start time.
   - [End Time] Set the end time.
   - [Repeat] Choose a desired repeat (Once, Daily (Monday - Friday), or Weekly).
   - [PDC] The PDC system automatically adjusts the recording time so that even if a program is not running to schedule, you won't miss it. For PDC to work properly, you must input the correct announced time and date of the program you want to record.
     Note that PDC may not work with every station.

   Notes:
   - Stations that use PDC typically include PDC information in the teletext TV guide pages. Please refer to these pages when setting a timer recording.
   - When using PDC, there may be instances where the beginning of the program is not recorded.

2. Enter the necessary information for your timer recording(s).
   - ◄ / ► (left/right) – move the cursor left/right
   - ▲ / ▼ (up/down) – change the setting at the current cursor position
   - Press RETURN (↶) to exit the Timer Record menu.
   - Press ENTER after filling in all the program information.
   - Press TIMER REC to display Timer Record List.
3. Set a recording mode as necessary by pressing REC MODE repeatedly. (XP, SP, LP, EP)
4. Press ENTER, the program will be memorized by the recorder.
   To check the programming, the Timer Record List will appear.
   Check field's "Rec. OK" on the Timer Record List indicates that the timer recording is programmed correctly.
5. Press RETURN (↶) to exit the Timer Record List.
6. Make sure that you load a recordable disc for DVD recording and press POWER to switch your unit to Standby.
   - If your unit is not in standby mode, a notification message will appear before the timer recording begins.
   - If you want to run the timer recording, press POWER to switch your unit to standby mode.
   - The notification message will only appear in TV tuner mode. (The notification message will not appear if your unit is in any menu mode.)

Notes:

- The timer indicator lights in the display window when the recorder is in standby with the timer active. (Nothing is displayed while the [Power Save Mode] is ON.)
- You must press STOP to stop the timer recording.
- If you set a timer recording to record to DVD but there isn't a recordable DVD loaded at the time of the recording, the Recovery Recording feature will automatically record the program to the HDD for you.

Timer Recording with VIDEO Plus+ System

This system makes programming timer recordings very simple. Most TV guides publish VIDEO Plus+ programming numbers with their program details.If you want to make a timer recording of a program, you just input the corresponding VIDEO Plus+ programming number. The date, start, stop and channel settings are made automatically. All you have to do is tell the recorder the recording mode, and whether it's a once-only recording, or a regular recording.
Up to 16 timer programs can be stored in the recorder.

VIDEO Plus+ and PlusCode are registered trademarks of Gemstar Development Corporation. The VIDEO Plus+ system is manufactured under license from Gemstar Development Corporation.

1. Press VIDEO Plus+ button.
   The VIDEO Plus+ menu will appear.
   Press VIDEO Plus+ button again to exit the menu.



   - [Number] Enter the VIDEO Plus+ programming number.
   - [Repeat] Choose a desired repeat (Once, Daily (Monday - Friday), or Weekly).

2. Press the number buttons to enter the VIDEO Plus+ programming number.
   - If you make a mistake, press CLEAR repeatedly and re-enter the correct number.
   - If you want to change the entered number one by one, press ◄ / ►, and press ▲ , ▼ or the number buttons.
3. Press ENTER.
   The media, programme position, date, start and end times and repeat type appear on the TV screen.
4. You can change the information as required using ◄ / ► / ▲ / ▼ (Media, PDC, etc.)
   Refer to "Timer Recording" on previous page.



5. Set a recording mode as necessary by pressing REC MODE repeatedly. (XP, SP, LP, EP)
6. Press ENTER, the program will be memorized by the recorder.
   To check the programming, the Timer Record List will appear.
   Check field's "Rec. OK" on the Timer Record List indicates that the timer recording is programmed correctly.
7. Press RETURN (↶) to exit the Timer Record menu.
8. Make sure that you load a recordable disc for DVD recording and press POWER to switch your unit to Standby.

Checking Timer Recording Details

Programming can be checked whenever the recorder is turned on. Press TIMER REC twice.

- Use ▲ / ▼ to select a timer recording.
- Press ENTER to edit the selected program. Timer Record menu appears.
- Press CLEAR to delete the selected program from the Timer Record List.

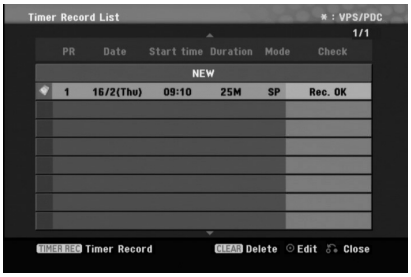

Canceling a Timer Recording

You can clear a timer setting anytime before the recording actually starts.

- Use ▲ / ▼ to select a program you want to erase on the Timer Recorder List. If you want to erase the program, press CLEAR.

Stopping a Timer Recording in Progress

After a timer recording has started, you can still cancel the program.

- Press STOP.

Timer Recording Troubleshooting

Even though the timer is set, the recorder will not record when:

- There is no disc loaded and there is not free space on the HDD.
- A non-recordable disc is loaded and there is not free space on the HDD.
- [Disc Protect] option is set to [ON] in the Setup menu and there is not free space on the HDD. (see page 25).
- Power is turned on.
- There are already 99 titles (DVD-RW, DVD-R, DVD-RAM), 49 titles (DVD+R, DVD+RW) recorded on the disc and there are already 999 titles recorded on the HDD.

You cannot enter a timer program when:

- A recording is already underway.
- The time you're trying to set has already passed.
- There are already 16 timer programs set.

If two or more timer programs overlap:

- The earlier program takes priority.
- When the earlier program finishes, the later program starts.
- If two programs are set to start at exactly the same time, the program entered first takes priority.

If the disc is damaged, the recording may not complete successfully. In this case even though the Check field shows "Rec. OK", it may not be.

Recording from an External Input

Recording from External Components

You can record from an external component, such as a camcorder or VCR, connected to any of the recorder's external inputs.

1. Make sure that the component you want to record from is connected properly to the recorder. See page 13-14.
2. Choose a media (TV HDD or TV DVD) to record using HOME menu. (see page 19).
3. Press AV repeatedly to select the external input to record from.
   - Tuner: Built-in tuner
   - AV1: EURO AV1 AUDIO/VIDEO mounted on back panel
   - AV2: EURO AV2 DECODER mounted on back panel
   - AV3: AV IN 3 mounted on back panel
   - DV: DV IN mounted on front panel

   Note :
   OPT will not be recorded.
4. Select the recording mode as necessary by pressing REC MODE repeatedly. (XP, SP, LP, or EP)
5. Press REC (●) once.
   Recording will start. (The REC indicator lights in the display window.)
   - Recording continues until you press STOP (■) or the disc is full.
   - To record for a fixed length of time, see "Instant Timer Recording" on page 40.
6. Press STOP (■) to stop recording.

Note:
If your source is copy-protected using CopyGuard, you will not be able to record it using this recorder. See Copyright on page 53 for more details.

Recording from DV Input

Before DV dubbing

You can connect a DV-equipped camcorder to this recorder using a single DV cable for input and output of audio, video, data and control signals.

- This recorder is only compatible with DV-format (DVC-SD, DV25) camcorders. Digital satellite tuners and Digital VHS video recorders are not compatible.
- You cannot connect more than one DV camcorder at a time to this recorder.
- You cannot control this recorder from external equipment connected via the DV IN jack (including two recorders).
- It may not always be possible to control the connected camcorder via the DV IN jack.
- Digital camcorders can usually record audio as stereo 16-bit/48kHz, or twin stereo tracks of 12-bit/32kHz. This recorder can only record one stereo audio track. Set [DV Rec Audio] option to [Audio 1] or [Audio 2] as required (see page 24).
- Audio input to the DV IN jack should be 32 or 48kHz (not 44.1kHz).
- Picture disturbance on the recording may occur if the source component pauses playback or plays an unrecorded section of tape, or if the power fails in the source component, or the DV cable becomes disconnected.

Recording from a Digital Camcorder

You can record from a digital camcorder connected to the DV IN jack on the front panel of this recorder. Using the recorder's remote, you can control both the camcorder and this recorder.
Before recording, make sure that the audio input for the DV IN jack is set up (see page 24).

Tips:

- The source signal must be DVC-SD format.
- Some camcorders cannot be controlled using this recorder's remote.
- If you connect a second recorder using a DV cable, you cannot control the second DVD from this one.
- You cannot control this unit remotely from a component connected to the DV IN jack.
- You cannot record date and time information from a DV cassette.

1. Make sure your digital camcorder is connected to the front panel DV IN jack. See page 14.
2. Select [TV HDD] or [TV DVD] option on the HOME menu then press ENTER. (see page 19).
3. Check that the DV audio input is as you require. You can choose between Audio 1 (original audio) and Audio 2 (overdubbed audio).
   - DV Input is set from the [DV Rec Audio] in sub-menu of the Setup menu. See "DV Recording Audio" on page 24 for more information.
4. Press AV repeatedly to select the DV input. DV appears in the display window and on the TV screen.
5. Find the place on the camcorder tape that you want to the recording to start from.
   For best results, pause playback at the point from which you want to record.
   - Depending on your camcorder, you can use this recorder's remote to control the camcorder using the STOP, PLAY and PAUSE functions.
6. Press REC (●) once to start recording.
   - Recording is automatically stopped if the recorder detects no signal.
   - You can pause or stop the recording by pressing PAUSE/STEP (❚❚) or STOP (■). You cannot control the camcorder from this remote control during recording.
   - In Video mode, the final frame of the recording may remain displayed on screen for a while after recording stops.

Troubleshooting

If you cannot get a picture and/or audio through the DV IN jack, check the bullet points:

- Make sure the DV cable is properly connected.
- Try switching off the connected equipment then switch back on.
- Try switching the audio input.

Note:

Depending on the connected camcorder, you may not be able to control it using the remote control supplied with this recorder.

Simultaneous recording and playback

Playback another title during recording

You can record a title to the HDD and play back a title from the HDD at the same time.

1. Start recording.
2. Press MENU/LIST.
3. Use the ▲ / ▼ / ◄ / ► and ENTER buttons to select a title that you want to play back.
4. Start Playback.
   The recording will continue while playing back the title from the HDD.

Notes:

- You cannot use simultaneous playback and recording while copying.
- You cannot edit the titles during simultaneous recording and playback.

Ripping CDs (for audio CDs)

1. Insert a CD into disc loader, CD graphic printed side facing you.
2. Press HOME and select [MUSIC] option.
3. Select [DISC] option and press ENTER.
4. In the screen of track list, select a track you wish to rip.

   Selecting multiple tracks

   1. *Press MARKER.*
      A check mark appears on the track.
      Press MARKER again to cancel the marked track.
   2. *Repeat step 1 to mark additional track.*

5. Press ENTER.
   The menu options appear on the menu.
6. Select [Ripping] option then press ENTER.
   Ripping options appears.
7. You can select a album (folder) to copy.
   Select a album (folder).
   Also, you can create new album (folder). Select [New Album] option on the ripping menu press ENTER.
   “NONAME###” folder is created.
8. Select [Ripping] option then press ENTER to begin ripping.



Notes:

- If you a folder’s depth is more 5 level, the copy is not available.
- It takes some time to convert the ripped tracks into MP3 files.
- If you rip and then play back the disc encoded with DTS, there will be only the noise of an unprocessed DTS signal.

To find your ripped tracks

You can find and playback the ripped tracks in hard disk.

1. Press HOME and select [MUSIC] option.
2. Select [HDD] option and press ENTER.

Editing

Title List and Chapter List Menu Overview

Using the Title List menu you can edit video content. The editing features available in the Title List menu depend on whether you are editing video on DVD, or the HDD, and whether you're editing Original content, or a Playlist.

There are two ways to edit VR mode DVD-RW discs. You can directly edit the Original content of the disc, or you can create and edit a Playlist. The Playlist doesn't actually change any of the content on the disc, but just controls how the content is played back.

Editing material recorded on the HDD is similar to editing the Original content of a VR mode DVD-RW, with similar commands for erasing and naming titles, as well as fine control over the content of chapters within titles for DVD disc.

Note:
During recording, if you display the Title List menu for the HDD, some of the titles may appear with a mark. These titles were recorded with a Line Input setting different to the current setting of the recorder.
During recording, these titles cannot be played.

1. Press MENU/LIST to display the Title List menu. Playback should be stopped when you do this.
   - You can also access it using HOME menu, select [MOVIE] option then select [HDD] or [DISC] option and press ENTER.
   - When selecting titles, use the ▲ / ▼ buttons to display the previous/next page if there are more than six titles.
   - If you are editing a VR mode disc, press MENU/LIST to switch between Original and Playlist menu.

On the left side of the screen are the menu options. The main part of the screen shows thumbnails of the titles (or chapter) on the DVD or HDD. You can change these thumbnails using the THUMBNAIL button—see Changing Title Thumbnails on page 47.

Press DISPLAY to display the information of selected title on the Title List menu.

After selecting a title or chapter on the Title List or Chapter List menu, then press ENTER. The menu options appears on the left side of the menu. Use ▲ / ▼ to select a option then press ENTER to confirm your selection.

2. To exit the Title List menu, press RETURN (↶) repeatedly.



1. Menu options: To display menu option, select a title or chapter then press ENTER. The options displayed differ depending on the disc type.
   - [Combine] Combines two chapters into one (page 51).
   - [Delete] Deletes the title or chapter. (page 49)
   - [Delete Part] Deletes a part of the Title (page 49).
   - [Divide] Divides a title into two (page 51).
   - [Dubbing] Copies the title to another media. (page 54)
   - [Full Play] Starts playback of the selected title including the hidden chapters.
   - [Hide (Show)] Hides (or Shows) the selected chapter. (page 52)
   - [Move] Moves a chapter on the Chapter List-Playlist menu to a position on the menu. (page 52)
   - [Play] Start playback of the selected title or chapter. The hidden chapters on the DVD+R/RW cannot be play back.
   - [Chapter] Displays Chapter List of the Title.
   - [Playlist Add] Adds the title or chapter to the Playlist. (page 48)
   - [Protect] Protects accidental recording, editing or deleting of the title. (page 52)
   - [Title Name] Edits the title name. (page 50)
   - [Title] Displays Title List of the chapter.
2. Indicates the record mode, free space, and elapsed time progress bar.
3. Current media
4. Currently selected title.
5. Thumbnail
6. Shows the selected title number and total number of titles.
7. Shows the title name, recorded date, and recording length.

HDD, VR Mode: Original and Playlist Editing

Titles, Chapters and Parts

Titles in the disc's original content contain one or more chapters. When you insert a disc's title into the Playlist, all the chapters within that title also appear. In other words, chapters in the Playlist behave exactly as chapters on a DVD-Video disc do. Parts are sections of Original or Playlist titles. From the Original and Playlist menu you can add or delete parts. Adding a chapter or title to the Playlist creates a new title made up of a section (ie., chapter) of an Original title. Deleting a part removes part of a title from the Original or Playlist menu.

⚠**Caution**

- When editing using the Delete, Add and Move functions, the start and end frames may not be exactly as set in the start and end point display.
- During Playlist playback, you may notice a momentary pause between edits. This is not a malfunction.

Is editing a DVD like editing a video tape?

No. When you edit a video tape you need one video deck to play the original tape and another to record the edits. With DVD, you edit by making a 'Playlist' of what to play and when to play it. On playback, the Recorder plays the disc according to the Playlist.

About word 'Original' and 'Playlist'

HDD -RWVR RAM

Throughout this manual, you will often see the words Original and Playlist to refer to the actual content and the edited version.

- **Original:** content refers to what's actually recorded on the disc.
- **Playlist:** content refers to the edited version of the disc — how the Original content is to be played.

Adding Chapter Markers

HDD -RWVR RAM +RW +R

You can create chapters within a title by inserting chapter marks at the desired points.

Note:
Chapter markers are inserted at regular intervals automatically. You can change this interval from the Initial Setup menu (see "Auto Chapter" on page 24).

During recording or playing back, at the point you want to start a new chapter, press CHP ADD.
A chapter marker icon appears on the TV screen.

Note:
The HDD is available only during playing back.

Changing Title Thumbnails

HDD -RWVR RAM +RW +R

Each title displayed in the Title List menu is represented by a thumbnail picture taken from the start of that title or chapter.
If you prefer, select a different still picture from within a title.
Press THUMBNAIL to make the currently displayed picture the one that appears in the Title List menu. The still picture that you choose appears in both the Original or Playlist menu.

Tip:
You can also change the thumbnail picture of the title on the Chapter List menu. Play a chapter on the Chapter List menu then press THUMBNAIL. The thumbnail picture of the title that includes the chapter is changed.

Making a New Playlist

HDD **-RW VR** **RAM**

Use this function to add an Original title or chapter to the Playlist. When you do this, the whole title is put into the Playlist (you can delete bits you don't need later — see Deleting an Original or Playlist title/chapter on page 49).

The title appears in the Playlist complete with the chapter markers that appear in the Original. However, if you add more chapter markers to the Original later, these are not automatically copied over into the Playlist title.

You can add up to 999 chapters to one disc . If you only want to add a chapter of a title, use the Adding a title/chapter to the Playlist on this page.

1. Choose a title or chapter on the Title List-Original menu or Chapter List-Original menu to put into the Playlist, then press ENTER.
   The menu options appears on the left side of the menu.



2. Use ▲ / ▼ to select [Playlist Add] option then press ENTER.



3. Select [New Playlist] then press ENTER.
   The new title appears in the updated Playlist. All chapters of the title are added to the Playlist.



Adding Additional Title/Chapters to the Playlist **HDD** **-RW VR** **RAM**

You can add an Original title or chapter to add to a Playlist title even if it is already registered.

1. Choose a title or chapter on the Title List-Original menu or Chapter List-Original menu to put into the Playlist, then press ENTER.
   The menu options appears on the left side of the screen.



2. Use ▲ / ▼ to select [Playlist Add] from menu options then press ENTER.



3. Choose a Title List-Playlist that is already registered to insert a title or chapter, then press ENTER.
4. Repeat steps 1-3 to add additional title or chapter on the Playlist.
   You can view the added chapters on the Chapter List-Playlist menu.



5. Press RETURN (↶) to exit, or MENU/LIST to go back to the Title List-Original menu.

Deleting an Original or Playlist Title/Chapter HDD -RWVR RAM

When you erase a title or chapter from the Playlist menu, you only remove it from the Playlist; the title/chapter remains in the Original menu.

If you choose to delete a title or chapter from the Original (title/chapter) menu, the title or chapter is actually deleted from the disc and the remaining time available for recording increases. Titles/chapters deleted from the Original are also removed from the Playlist.

Note:

It may not be possible to delete chapters that are less than 5 seconds long.

1. Use ◄ / ► / ▲ / ▼ to choose a chapter or title you want to delete on the Title List or Chapter List menu then press ENTER.
   The menu options appears on the left side of the screen.
2. Select [Delete] option from the options on the menu.

   Example: Title List-Original (-RWVR)



3. Press ENTER to confirm.
   The confirm message for deleting will appear.
4. Use ◄ / ► to select [OK] then press ENTER.
   The selected chapter or title is deleted.
   After pressing ENTER, the new, updated menu is displayed.
5. Repeat steps 1 - 4 to continue to delete from the menu.
6. Press RETURN (↩) repeatedly to exit the menu.

Notes:

- When DVD+RW recording, the deleted title's name is changed to 'Deleted Title'.
- If more than two titles are repeatedly deleted, the titles are combined into one.
- When you are deleting a title or chapter, only the last one on DVD+RW increases remaining recording time.

Deleting a Part HDD -RWVR RAM

You can delete a part which you do not want in the title.

1. Use ◄ / ► / ▲ / ▼ to choose a title you want to delete on the Title List menu then press ENTER.
   The options appears on the left side of the menu.
2. Select [Edit-Delete Part] option then press ENTER.
   The Edit-Delete Part menu appears on the TV screen.
   [Start Point] icon is highlighted.

   Example: -RWVR



3. Starts playback and use pause step, search and slow-motion to find the starting point.
4. Press ENTER at the starting point of the section you want to delete.
   'End Point' icon is highlighted.
   The part is indicated on the Progress Bar.
5. Use pause step, search and slow-motion to find the ending point.
6. Press ENTER at the ending point of the section you want to delete.
   You can cancel the selected point, use ▲ / ▼ to select [Cancel] icon then press ENTER.
7. If you finish to edit, select [Done] icon then press ENTER.
   The confirm message for deleting will appear.
   Use ◄ / ► to select [OK] then press ENTER.
   The selected part is deleted from the title and Title List menu appears.

Note:

It may not be possible to delete parts that are less than 3 seconds long.

Naming a Title

You can name Original and Playlist titles independently.

1. Choose the title you want to name on the Title List menu, then press ENTER.
   The menu options appears on the left side of the menu.
2. Use ▲/▼ to select [Edit-Title Name] option then press ENTER.
   Keyboard menu appears.



3. Enter a name for the title. Use ◄ / ► / ▲ / ▼ to select a character then press ENTER to confirm your selection.
   - **OK:** Select to finish.
   - **Cancel:** Cancels all entered characters.
   - **Space:** Inserts a space at the cursor position.
   - **Delete:** Deletes the previous character at the cursor position.
   - **◄ / ►:** Moves cursor to left or right.
4. Choose OK then press ENTER to fix the name and return to the previous menu screen.
5. Press RETURN (↶) repeatedly to exit the menu.

Notes:

- For discs formatted on a different recorder, you will see only a limited character set.
- When recording on DVD-R, DVD+R or DVD+RW discs, the entered name is displayed on the DVD player only after finalization.

Divide One Titles Into Two

HDD **+RW**

Use this command to split a title up into two new titles.

1. On the Title List menu, select a title you want to divide then press ENTER.
   The menu options appears on the left side of the screen.
2. Select [Divide] option.

   Example: Title List (**+RW**)



3. Press ENTER.
   Edit (Divide) menu appears. [Divide] option is highlighted.

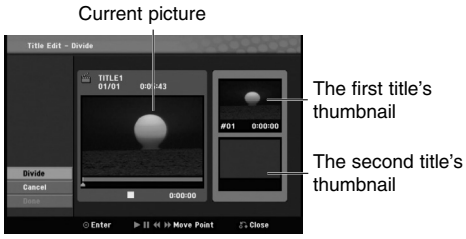

4. Use play, pause step, search and slow-motion to find the point you want to divide the title.
5. Select [Divide] option then press ENTER at the point.
   To reset the point, select [Cancel] option then press ENTER. Repeat from step 3.
6. Choose [Done] option then press ENTER to fix the dividing point.
   The title is divided into two new titles. It take up to 4 minutes to divide.

Note:

You cannot select dividing point less than 3 seconds.

Combining Two Chapters Into One

HDD **-RWVR** **+RW** **+R** **RAM**

Use this function to combine two adjacent Playlist or Original chapters into one.

Note:

This function is not available if there is only one chapter within the title.

1. On the Chapter List menu, select the first chapter of the two chapters you want to combine then press ENTER
   The menu options appears on the left side of the screen.
2. Use ▲ / ▼ to select [Combine] option.
   The combine indicator appears between the two chapters you want to combine.



3. Press ENTER.

Moving a Playlist Chapter

-RWVR **RAM**

Use this function to re-arrange the playing order of Playlist chapters on the Title List-Playlist menu.

Note:
This function is not available if there is only one chapter.

1. Press MENU / LIST repeatedly to display the Title List-Playlist menu.
2. Use ▲▼◄► to choose the title you want to view Chapter List-Playlist menu then press ENTER.
   Title List-Playlist options appears on the left side of the menu.
3. Use ▲▼ to select 'Chapter' from Title List-Playlist options then press ENTER.
   Chapter List-Playlist menu appears on the TV screen.
4. Use ▲▼◄► to choose the Chapter you want to move.
5. Press ENTER.
   The Chapter List-Playlist options appears on the left side of the menu.
6. Use ▲▼◄► to select [Edit-Move] option from Chapter List-Playlist options then press ENTER.



7. Use ◄ / ► / ▲ / ▼ to choose the place you want to move the chapter to then press ENTER.
   After pressing ENTER, the updated menu is displayed.

Hide a Chapter **+RW** **+R**

You can skip playing chapters without deleting from the disc.

1. Use ▲▼◄► to choose a chapter you want to hide on the Chapter List menu, then press ENTER.
   Options appear on the left side of the screen.
2. Select [Edit-Hide] option.

   Example: Chapter List (DVD+RW)



3. Press ENTER to confirm.

Tip
If you select a hidden chapter on the Chapter List menu, you can show it by choosing [Show] option on the menu. After doing that, you are able to see the chapter.

Protect a Title **HDD** **+RW** **+R** **-RWVideo** **-R** **RAM** **(Unfinalized -RWVR)**

Use this function to protect against accidental recording, editing or deleting of the title.

1. Press MENU/LIST to display the Title List menu.
2. Use ▲▼◄► to choose a title you want to protect then press ENTER.
   Options appear on the left side of the screen.
3. Select [Protect] from the options.



4. Press ENTER to confirm.
   The lock mark will appears on the title's thumbnail.

Tip
If you select a title that has already been protected on the Title List menu, you can unprotect it by choosing [Unprotect] option from the Title List menu options. After doing that, you can edit and delete the title.

Dubbing

Before Dubbing

Use the copying features of this recorder to:

- Back up important recordings stored on the HDD to a DVD.
- Make a DVD copy of a recording on the HDD to play in another player.
- Transfer video from a DVD to the HDD for editing.
- Transfer edited video from the HDD to DVD.

Restrictions on copying

Some video material is copy-once protected: Such material cannot be copied to HDD or DVD.

You can identify copy-once protected material during playback by displaying disc information on-screen.

- NTSC format signals from the analog or the DV inputs is not recorded correctly with this recorder.
- Video signals in SECAM format (from the built-in TV tuner or from the analog inputs) are recorded in PAL format.

What is 'CPRM'?

CPRM is a copy protection system (with scramble system) only allowing the recording of 'copy once' broadcast programs. CPRM stands for Content Protection for Recordable Media.
CPRM recordings can only be made on DVD-RW discs formatted in VR mode or DVD-RAM discs, and CPRM recordings can only be played on players that are specifically compatible with CPRM.

Copyright

- Recording equipment should be used only for lawful copying and you are advised to check carefully what is lawful copying in the area in which you are making a copy. Copying of copyright material such as films or music is unlawful unless permitted by a legal exception or consented to by the rights owner.
- This product incorporates copyright protection technology that is protected by method claims of certain U.S. patents and other intellectual property rights owned by Macrovision Corporation and other rights owners. Use of this copyright protection technology must be authorized by Macrovision Corporation, and is intended for home and other limited viewing uses only, unless otherwise authorized by Macrovision corporation. Reverse engineering or disassembly is prohibited.
- CONSUMERS SHOULD NOTE THAT NOT ALL HIGH DEFINITION TELEVISION SETS ARE FULLY COMPATIBLE WITH THIS PRODUCT AND MAY CAUSE ARTIFACTS TO BE DISPLAYED IN THE PICTURE. IN CASE OF 625 PROGRESSIVE SCAN PICTURE PROBLEMS, IT IS RECOMMENDED THAT THE USER SWITCH THE CONNECTION TO THE 'STANDARD DEFINITION' OUTPUT. IF THERE ARE QUESTIONS REGARDING OUR TV SET COMPATIBILITY WITH THIS MODEL 625p HDD/DVD RECORDER, PLEASE CONTACT OUR CUSTOMER SERVICE CENTER.

Dubbing from HDD to DISC

1. On the Title List-HDD menu, select a title you want to dub then press ENTER.
   The menu options appears on the left side of the screen.



2. Use ▲ / ▼ to select [Dubbing] option then press ENTER.
   Dubbing menu appears.



3. Dubbing starts.
4. To stop dubbing at any other time, press STOP (■).

Dubbing from DISC to HDD

1. On the Title List menu, select a title you want to dub then press ENTER.
   The menu options appears on the left side of the screen.



2. Use ▲ / ▼ to select [Dubbing] option then press ENTER.
   Dubbing menu appears.



3. Dubbing starts.
4. To stop dubbing at any other time, press STOP (■).

Note:
Depending on the conditions of the recording equipment or the disc itself, the dubbing may not be capable.

Reference

Additional Information

Overwriting Recording +RW

To overwrite a new video recording on a previously recorded title, follow these steps. This feature is not available for DVD+Rs, that always record at the end of the Disc.

1. Select input source you want to record (TV channel, AV1-3, DV).
2. Press MENU/LIST to display the Title List menu.



3. Use ▲▼◄► to choose a title you want to overwrite.
4. Press REC (●) to start overwrite recording. Overwrite recording starts from the start point of the title.
5. Press STOP (■) to stop the overwrite recording. The new title is created and updated menu is displayed.

Notes:

- This function is not available for a protected title.
- **If the overwrite is longer than the recording length of the current title, the next title is overwritten. But if next title is protected, the overwriting stops at the starting point of the title.**
- If the overwriting recording is shorter than the recording length of the current title, the current title is divided into the overwritten title and the remains of the current title.
- If the selected title's recording length is short, the overwriting may not be operated.

Viewing Title List menu displayed on other DVD Recorders or Players

+RW +R

You can view the Title List menu displayed on the other DVD player that is capable of playing DVD+RW or DVD+R discs.

1. Insert DVD+R or DVD+RW disc recorded already.
2. Press TITLE in Play or stop mode.
   Title List menu will appear as shown below.

   Tip

   You can remove the Title List menu by pressing STOP (■).

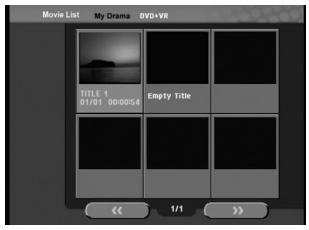

3. To play back a title, select the title you want then press ENTER or PLAY (►).

Playing Your Recordings on Other DVD Players (Finalizing a Disc)

Most regular DVD players can play finalized discs recorded in Video mode, finalized DVD+R or DVD+RWs. A small number of players can also play DVD-RW discs recorded in VR mode, finalized or not. Check the manual that came with the other player to check what formats of discs it will play.

Finalizing 'fixes' the recordings and editings in place so that the disc can be played on a regular DVD player or computer equipped with a suitable DVD-ROM drive.
Finalizing a Video mode disc creates a menu screen for navigating the disc. The menu can be accessed by pressing MENU/LIST or TITLE.
To finalize a disc, refer to "Finalize" on page 25.

Notes:

- Unfinalized DVD+RW is playable on regular DVD players.
- The edited contents of a DVD+RW disc is compatible on regular DVD players only after finalization.
- Any edited contents of the DVD+R disc are not compatible on regular DVD players. (Hide, chapter combine, added chapter mark, etc.)
- How long finalization takes depends on the type of disc, how much is recorded on the disc, and the number of titles on the disc.
- DVD+R DL disc can take up to 30 minutes to finalize.

Language Codes

Use this list to input your desired language for the following initial settings:
Disc Audio, Disc Subtitle, Disc Menu.

Language	Code	Language	Code	Language	Code	Language	Code
Abkhazian	6566	Fiji	7074	Lingala	7678	Singhalese	8373
Afar	6565	Finnish	7073	Lithuanian	7684	Slovak	8375
Afrikaans	6570	French	7082	Macedonian	7775	Slovenian	8376
Albanian	8381	Frisian	7089	Malagasy	7771	Somali	8379
Ameharic	6577	Galician	7176	Malay	7783	Spanish	6983
Arabic	6582	Georgian	7565	Malayalam	7776	Sudanese	8385
Armenian	7289	German	6869	Maltese	7784	Swahili	8387
Assamese	6583	Greek	6976	Maori	7773	Swedish	8386
Aymara	6588	Greenlandic	7576	Marathi	7782	Tagalog	8476
Azerbaijani	6590	Guarani	7178	Moldavian	7779	Tajik	8471
Bashkir	6665	Gujarati	7185	Mongolian	7778	Tamil	8465
Basque	6985	Hausa	7265	Nauru	7865	Tatar	8484
Bengali; Bangla	6678	Hebrew	7387	Nepali	7869	Telugu	8469
Bhutani	6890	Hindi	7273	Norwegian	7879	Thai	8472
Bihari	6672	Hungarian	7285	Oriya	7982	Tibetan	6679
Breton	6682	Icelandic	7383	Panjabi	8065	Tigrinya	8473
Bulgarian	6671	Indonesian	7378	Pashto, Pushto	8083	Tonga	8479
Burmese	7789	Interlingua	7365	Persian	7065	Turkish	8482
Byelorussian	6669	Irish	7165	Polish	8076	Turkmen	8475
Cambodian	7577	Italian	7384	Portuguese	8084	Twi	8487
Catalan	6765	Japanese	7465	Quechua	8185	Ukrainian	8575
Chinese	9072	Javanese	7487	Rhaeto-Romance	8277	Urdu	8582
Corsican	6779	Kannada	7578	Rumanian	8279	Uzbek	8590
Croatian	7282	Kashmiri	7583	Russian	8285	Vietnamese	8673
Czech	6783	Kazakh	7575	Samoan	8377	Volapük	8679
Danish	6865	Kirghiz	7589	Sanskrit	8365	Welsh	6789
Dutch	7876	Korean	7579	Scots Gaelic	7168	Wolof	8779
English	6978	Kurdish	7585	Serbian	8382	Xhosa	8872
Esperanto	6979	Laothian	7679	Serbo-Croatian	8372	Yiddish	7473
Estonian	6984	Latin	7665	Shona	8378	Yoruba	8979
Faroese	7079	Latvian, Lettish	7686	Sindhi	8368	Zulu	9085

Area Codes

Choose an area code from this list.

Area	Code	Area	Code	Area	Code	Area	Code
Afghanistan	AF	Ethiopia	ET	Malaysia	MY	Saudi Arabia	SA
Argentina	AR	Fiji	FJ	Maldives	MV	Senegal	SN
Australia	AU	Finland	FI	Mexico	MX	Singapore	SG
Austria	AT	France	FR	Monaco	MC	Slovak Republic	SK
Belgium	BE	Germany	DE	Mongolia	MN	Slovenia	SI
Bhutan	BT	Great Britain	GB	Morocco	MA	South Africa	ZA
Bolivia	BO	Greece	GR	Nepal	NP	South Korea	KR
Brazil	BR	Greenland	GL	Netherlands	NL	Spain	ES
Cambodia	KH	Heard and McDonald Islands	HM	Netherlands Antilles	AN	Sri Lanka	LK
Canada	CA	Hungary	HU	New Zealand	NZ	Sweden	SE
Chile	CL	India	IN	Nigeria	NG	Switzerland	CH
China	CN	Indonesia	ID	Norway	NO	Thailand	TH
Colombia	CO	Israel	IL	Oman	OM	Turkey	TR
Congo	CG	Italy	IT	Pakistan	PK	Uganda	UG
Costa Rica	CR	Jamaica	JM	Panama	PA	Ukraine	UA
Croatia	HR	Japan	JP	Paraguay	PY	United States	US
Czech Republic	CZ	Kenya	KE	Philippines	PH	Uruguay	UY
Denmark	DK	Kuwait	KW	Poland	PL	Uzbekistan	UZ
Ecuador	EC	Libya	LY	Portugal	PT	Vietnam	VN
Egypt	EG	Luxembourg	LU	Romania	RO	Zimbabwe	ZW
El Salvador	SV			Russian Federation	RU		

Presetting the Radio Stations

You can preset 50 stations for FM and AM.
Before tuning, make sure that you have turned down the volume.

1. Press FM/AM on the remote control until FM or AM appears in the display window.
2. And then every time you press FM/AM, FM and AM changes alternately.
3. Press and hold TUN.- or TUN.+ on the remote control for about three seconds until the frequency indication starts to change, then release.
   Scanning stops when the unit tunes in a station.
4. Press ENTER on the remote control.
   A preset number will flash in the display window.
5. Press PR + or - on the remote control to select the preset number you want.
6. Press ENTER on the remote control.
   The station is stored.
7. Repeat steps 3 to 6 to store other stations.

To tune in a station with a weak signal

Press **TUN.-** or **TUN.+** repeatedly in step 3 to tune in the station manually.

To clear all the stored stations

Press and hold ENTER for about five seconds to clear all the stored stations.

Listening to the Radio

Preset radio stations in the unit's memory first (see "Presetting radio stations" on the left).

1. Press FM/AM until AM or FM appears in the display window.
   The last received station is tuned in.
2. Press PR + or - repeatedly on the remote control to select the preset station you want.
   Each time you press this button, the Recorder Receiver tunes in one preset station at a time.
3. Adjust the volume by pressing VOL + or VOL- on the remote control repeatedly.

To turn off the radio

Press POWER to turn the Recorder Receiver off or select another function mode (DVD, AV 1, AV 2 etc.,).

To listen to non-preset radio stations

- Use manual or automatic tuning.
- For manual tuning, press TUN.- or TUN.+ on the remote control repeatedly.
- For automatic tuning, press and hold TUN.- or TUN.+ on the remote control for about three seconds on the remote control.

For your reference

- **If an FM program is noisy**
  Press AUDIO/MO.ST. repeatedly on the remote control so that "STEREO" changes to MONO in the display window. There will be no stereo effect, but the reception will improve. Press this button repeatedly again to change "MONO" to "STEREO".
- **To improve reception**
  Reorient the supplied antennas.

RDS Operation

This unit is equipped with RDS (Radio Data System), which brings a wide range of information to FM radio. Now in use in many countries, RDS is a system for transmitting station call signs or network information, a description of station programme type text message about the station or specifics of musical selection and the correct time.

RDS Tuning

When a FM station is tuned in and it contains RDS data, the unit will automatically display the station's call sign as well as indicators for the RDS services programme (PS), programme type recognition (PTY), Radiotext (RT) and Clock Time (CT) if transmitted by the station.

RDS Display Options

The RDS system is capable of transmitting a wide variety of information in addition to the initial call sign that appears when a station is first tuned. In normal RDS operation the display will indicate the station name, broadcast network or call letters. Pressing **RDS** on the remote control enables you to cycle through the various data types in the sequence:

(PS ↔ FREQUENCY ↔ PTY ↔ RT ↔ CT)

- **PS (Programme Service name)-** The name of the channel is shown in the Display Window.
- **PTY (Programme type recognition)-** The name of the programme type is shown in the Display Window.
- **RT (Radiotext)-** A "text" message contains special information from the broadcast station. Note that this message may scroll across the display to permit message.
- **CT (Time controlled by the channel)-** Enables the unit to receive the actual time and show it in the Display Window.

Note:

Some RDS stations may not choose to include some of these additional features. If the data required for the selected mode is not being transmitted, the Display Window will show a **PTY NONE, RT NONE, CT NONE, PS NONE** message.

Programme Search (PTY)

A major benefit of RDS is its ability to encode broadcasts with Programme Type (PTY) codes that indicate the type of material being broadcast. The following list shows the abbreviations used to indicate each PTY along with an explanation of the PTY.

News	News
Affairs	Current Affairs
Info	Information
Sport	Sports
Educate	Educational
Drama	Drama
Culture	Culture
Science	Science
Varied	Varied Speech Programme
Pop M	Popular Music
Rock M	Rock Music
Easy M	Easy Listening Music
Light M	Classical Music
Classics	Serious Classical Music
Other M	Other Music
Weather	Weather Information
Finance	Financial Programmes
Children	Children's Programmes
Social	Social Affairs Programmes
Religion	Religious Broadcasts
Phone In	Phone-In Programmes
Travel	Travel and Touring
Leisure	Leisure and Hobby
Jazz	Jazz Music
Country	Country Music
Nation M	National Music
Oldies	Oldies Music
Folk M	Folk Music
Document	Documentary Programmes
TEST	Station Alarm Test Message
Alarm !	Emergency Broadcast Information

You may search for a specific Programme Type (PTY) by following these steps:

1. Press FM/AM to select FM mode.
2. Press PTY on the remote control, the display will show the last PTY in use.
3. Press PTY repeatedly to select a desired PTY.
4. When the PTY is selected, press and hold PTY. The unit will go into an automatic search mode.When a station is tuned, the search will stop.

Troubleshooting

Check the following guide for the possible cause of a problem before contacting service.

Symptom	Cause	Solution
No power.	• The power cord is disconnected.	• Plug the power cord into the wall outlet securely.
No picture.	• The TV is not set to receive recorder signal output.	• Select the appropriate video input mode on the TV so the picture from the recorder appears on the TV screen.
	• The video cable is not connected securely.	• Connect the video cable securely.
	• The connected TV power is turned off.	• Turn on the TV.
No sound.	• The equipment connected with the audio cable is not set to receive recorder signal output.	• Select the correct input mode on the audio receiver so you can listen to the sound from the recorder.
	• The audio cables are not connected securely.	• Connect the audio cable securely.
	• The power of the equipment connected with the audio cable is turned off.	• Turn on the equipment connected with the audio cable.
	• The audio connecting cord is damaged.	• Replace it with new one.
The playback picture is poor.	• The disc is dirty.	• Clean the disc.
The recorder does not start playback.	• No disc is inserted.	• Insert a disc. (Check that the disc indicator in the display window is lit.)
	• An unplayable disc is inserted.	• Insert a playable disc. (Check the disc type, color system, and regional code.)
	• The disc is placed upside down.	• Place the disc with the playback side down.
	• The disc is not placed within the guide.	• Place the disc on the disc tray correctly inside the guide.
	• The disc is dirty.	• Clean the disc.
	• The Rating level is set.	• Cancel the Rating function or change the rating level.
The picture from the external input is distorted	• The video signal from the external component is copy-protected.	• You cannot connect via this recorder. Connect the component directly to your TV.
Some channels are skipped over when using ▲ / ▼.	• Those channels are not stored in the recorder.	• Restore channels. See “Program Edit” on page 20.
The picture or sound of broadcasting channel is weak or missing.	• Aerial or cables are loose.	• Tighten connections or replace cable.
Camcorder image is not shown.	• Camcorder is off.	• Turn camcorder on and operate properly.
Camcorder image via A/V input or DV IN to recorder is not shown on TV screen.	• The recorder’s source is incorrect.	• Use AV to select input channel (AV1, AV2, DV, etc.)
Radio stations cannot be tuned in.	• The antenna is positioned or connected poorly.	• Connect the antenna securely. • Adjust the antennas and connect an external antenna if necessary.
CHECK CABLE appears in the Display window.	• The system cable is connected incorrectly.	• Check the status of connection and connect the system cable securely.

Symptom	Cause	Solution
Cannot play a disc recorded using this recorder on another player.	• The disc was recorded in Video mode.	• Finalize the disc. (page 25)
	• Some players will not play even a finalized disc recorded in Video mode.	• No solution.
	• The disc was recorded in VR mode,	• The other player must be RW compatible in order to play it.
	• Discs recorded with copy-once material cannot be played on other players.	• No solution.
Cannot record or did not record successfully.	• The remaining blank space on the disc is insufficient.	• Use another disc.
	• The source you are trying to record is copy protected.	• You cannot record the source.
	• When setting the recording channel, the channel is tuned on the TV's own tuner.	• Select the channel on the recorder's built-in TV tuner.
	• When recording to a Video mode disc, programs that are copy-once protected cannot be recorded.	• Use a VR mode formatted disc for copy-once material.
Timer recording is not possible.	• Clock in recorder is not set to correct time.	• Set clock to correct time. See "Auto Clock Set" or "Manual Clock Set" on page 21.
	• Timer has been programmed incorrectly.	• Reprogram Timer. See "Timer Recording" on page 41.
	• Timer record indicator light does not appear after programming timer.	• Reprogram Timer.
Stereo Audio Record and/or Playback is not present.	• TV is not Stereo-compatible.	• No solution.
	• Broadcast program is not in stereo format.	• No solution.
	• The recorder A/V Out jacks are not connected to TV A/V In jacks.	• Make A/V connections. Stereo is available only via A/V output from the recorder.
	• The recorder Audio/Video Out is not selected for viewing at the TV.	• Select AUX or A/V source as TV input.
	• The recorder's TV audio channel is set to mono.	• Set TV audio channel mode to Stereo. See "Changing TV audio channel" on page 40.
The remote control does not work properly.	• The remote control is not pointed at the remote sensor of the recorder.	• Point the remote control at the remote sensor of the recorder.
	• The remote control is too far from the recorder.	• Operate the remote control within 7 m.
	• There is an obstacle in the path of the remote control and the recorder.	• Remove the obstacle.
	• The batteries in the remote control are exhausted.	• Replace the batteries with new ones.

Resetting the recorder

If you observe any of the following symptoms...

- The unit is plugged in, but the power will not turn on or off.
- The front panel display is not working.
- The recorder is not operating normally.

...you can reset the recorder as follows:

- Press and hold the POWER button for at least five seconds. This will force the unit to power off then turn the unit back on.
- Unplug the power cord, wait at least five seconds, and then plug it in again.

Specifications

General

Power requirements	AC 200-240V, 50/60 Hz
Power consumption	35W
Dimensions (approx.)	441 X 58 X 307 mm (w x h x d) without foot
Mass (approx.)	4.5 kg
Operating temperature	5˚C to 35˚C
Operating humidity	5 % to 90 %
Television system	PAL I, B/G, I/I, SECAM D/K, K1 colour system
Recording format	PAL

Recording

Recording format	DVD Video Recording, DVD-VIDEO
Recordable media	HDD (160GB), DVD-ReWritable, DVD-Recordable, DVD+ReWritable, DVD+Recordable, DVD+Recordable (Double Layer), DVD-RAM
Recordable time	DVD (4.7GB): Approx. 1 hour (XP mode), 2 hours (SP mode), 4 hours (LP mode), 6 hours (EP mode) DVD+R DL (8.5GB): Approx. 3 hour (XP mode), 3 hours 40 minutes (SP mode), 7 hours 10 minutes (LP mode), 10 hours 30 minutes (EP mode) HDD (160GB): Approx. 40 hours (XP mode), 66 hours (SP mode), 132 hours (LP mode), 198 hours (EP mode)
Video recording format	
Sampling frequency	27MHz
Compression format	MPEG2
Audio recording format	
Sampling frequency	48kHz
Compression format	Dolby Digital

Playback

Frequency response	DVD (PCM 48 kHz): 8 Hz to 20 kHz, CD: 8 Hz to 20 kHz DVD (PCM 96 kHz): 8 Hz to 44 kHz
Signal-to-noise ratio	More than 100 dB (AUDIO OUT connector)
Harmonic distortion	Less than 0.008% (AUDIO OUT connector)
Dynamic range	More than 95 dB (AUDIO OUT connector)

Inputs

Audio input (optical audio)	3 V (p-p), 75 Ω, Optical connector x 1
AERIAL IN	Aerial input, 75 ohms
VIDEO IN	1.0 Vp-p 75 ohms, sync negative, RCA jack x 1 / SCART x 2
AUDIO IN	0 dBm more than 47 kohms, RCA jack (L, R) x 1 / SCART x 2
DV IN	4 pin (IEEE 1394 standard)

Outputs

VIDEO OUT	1 Vp-p 75 Ω, sync negative, RCA jack x 1 / SCART x 2
COMPONENT VIDEO OUT	(Y) 1.0 V (p-p), 75 Ω, negative sync, RCA jack x 1 (Pb)/(Pr) 0.7 V (p-p), 75 Ω, RCA jack x 2
HDMI video/audio output	19 pin (HDMI standard, Type A)
Audio output (analog audio)	2.0 Vrms (1 KHz, 0 dB), 600 Ω, RCA jack (L, R) x 1 / SCART x 2

Amplifier

Stereo mode	155W + 155W (Rated Output Power 130W, 4Ω at 1 kHz, THD 10 %)
Surround mode	Front: 155W + 155W (Rated Output Power 130W, THD 10 %)
	Center*: 155W
(* Depending on the sound mode settings and the source, there may be no sound output.)	Surround*: 155W + 155W (Rated Output Power 130W, 4Ω at 1 kHz, THD 10 %)
	Subwoofer*: 225W (Rated Output Power 180W, 3Ω at 30 Hz, THD 10 %)

Tuner Specifications

Tuning Range (FM)	87.5 - 108 MHz
Intermediate Frequency (FM)	10.7 MHz
Signal-to-noise ratio	60 dB (Mono)
Tuning Range (AM)	522 - 1,620 kHz
Intermediate Frequency (AM)	450 kHz
Antenna	Wire antenna (FM)
	Loop antenna (AM)

Speakers

Front/Rear (SH92TA-S)

Type:	2 Way 3 Speaker
Impedance:	4 Ω
Frequency Response:	100 - 20,000 Hz
Sound Pressure Level:	83 dB/W (1m)
Max. Input Power:	310W
Net Dimensions (**WxHxD**):	256 x 1290 x 268 mm
Net Weight:	5.2 kg

Center (SH92TA-C)

Type:	2 Way 3 Speaker
Impedance:	4 Ω
Frequency Response:	100 - 20,000 Hz
Sound Pressure Level:	83 dB/W (1m)
Max. Input Power:	310W
Net Dimensions (**WxHxD**):	500 x 172 x 108 mm
Net Weight:	2.2 kg

Active Subwoofer (SH92TA-A)

Power consumption:	100W
Type:	1 Way 1 Speaker
Impedance:	3 Ω
Frequency Response:	40 - 1,500 Hz
Sound Pressure Level:	82 dB/W (1m)
Max. Input Power:	450W
Net Dimensions (**WxHxD**):	236 x 440 x 400 mm
Net Weight:	11.5 kg

- ***Design and specifications are subject to change without notice.***



Disposal of your old appliance

1. When this crossed-out wheeled bin symbol is attached to a product it means the product is covered by the European Directive 2002/96/EC.
2. All electrical and electronic products should be disposed of separately from the municipal waste stream via designated collection facilities appointed by the government or the local authorities.
3. The correct disposal of your old appliance will help prevent potential negative consequences for the environment and human health.
4. For more detailed information about disposal of your old appliance, please contact your city office, waste disposal service or the shop where you purchased the product.

Manufactured under license from Dolby Laboratories. “Dolby”, “Pro Logic”, and the double-D symbol are trademarks of Dolby Laboratories.

“DTS” and “DTS Digital Surround” are registered trademarks of Digital Theater Systems, Inc.

Technology with the human touch

GUARANTEE

- LG Electronics U.K. Ltd. will provide the following services in order to expedite this Guarantee.

1. All faulty components which fail due to defective manufacture will be replaced free of charge for a period of 12 months from the original date of purchase.
2. The dealer (or his service agent) who sold the product will be reimbursed for any labour provided in the repair of this LG equipment, for a period of 12 months from the original date of purchase. These claims must be made in accordance with the published scale of service charges and relevant claims procedure.

PLEASE NOTE:

A. The dealer may restrict the guarantee to the original purchaser.
B. The dealer is not obliged to carry out service under guarantee if unauthorized modifications are made to the apparatus, or if non standard components are used or if the serial number of the apparatus is removed, defaced, misused, or altered.
C. Any claims made under guarantee must be directed to the dealer from whom the equipment was originally purchased. The dealer may, before carrying out service under guarantee, require a receipted account as evidence of the date of purchase.
D. We respectfully point out that your dealer is not obligated to replace batteries if they become exhausted or worn in use.
E. Aerial alignment and consumer control adjustments are not covered by this guarantee.

This guarantee does not affect your statutory rights.

- REQUIREMENTS TO MAINTAIN WARRANTY COVERAGE:

RETAIN YOUR RECEIPT TO PROVE DATE OF PURCHASE. A COPY OF YOUR RECEIPT MUST BE SURRENDERED AT THE TIME GUARANTEE SERVICE IS PROVED.

- Product Registration Card : It is helpful to complete at least your name, address, phone, model & serial numbers and return it. This will enable LG to assist you in the future should you lose your receipt, your units be stolen, or should modifications be necessary.

- To obtain information or assistance: Call 0870 873 5454 Monday-Friday 9.00am-4.30pm

MODEL NO.*	SERIAL NO.*	DATE OF PURCHASE.*

* Please complete for your own record

In all cases of difficulty - consult your LG dealer from whom the product was purchased

LGEUK Website : www.lge.co.uk
(service website : www.lgelectronics.co.uk)

P/NO : MFL38591025