Model	VTUP861NB.COBQLGU		
Language	ENGLISH		
Page	15	Color(cover/body)	1/1
Material	Weight 100g	Size(W*H)	215*279(mm)
Date	2007.11.01	Designer	ZHANGYUCHEN
Part No.	38288I2002K	Description	Owners Manual

Chage Record

No.	Change content	ECO No.	Date	Designer	Confirm
△1					
△2					
△3					
△4					
△5					
△6					
△7					
△8					
△9					

LG

Upright Vacuum Cleaner
Owner's Manual

MODEL: VUP861NB(T)
V-UP861NB(T)
VTUP61NB(T)

Review this manual before operating the cleaner.

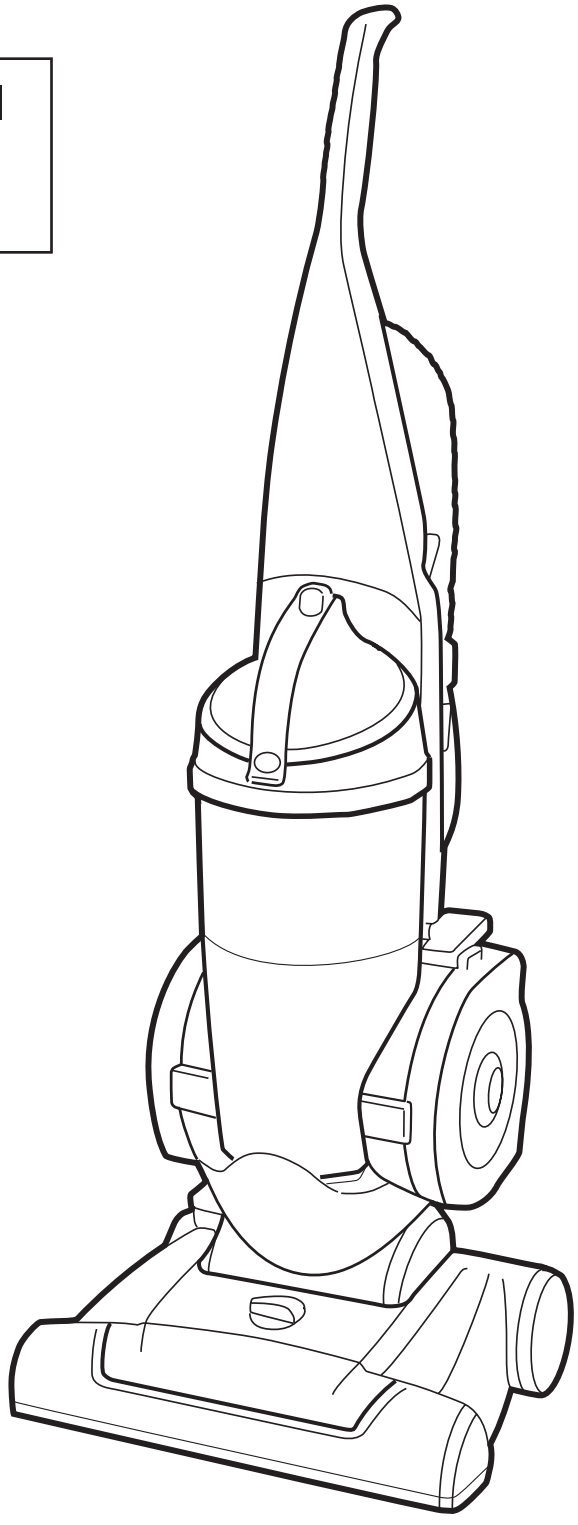

P/No.: 38288I2002K

The LGE Customer Support Team can be contacted as follows:		
For all Consumer enquiries Line opening hours **Monday-Friday** 09:00 to 20:00, **Saturday** 09:00 to 18:00, **Sunday** 10:00 to 16:00	**Phone**	**0870 873 LGLG(5454)** (National call Rate)
	E-Mail	**www.lgelectronics.co.uk,** then select "CONTACT US"
	Fax	**0870 872 7337**

Important Safeguards!

Contents

Assembling Cleaner 5
Carton Contents 5
Cleaner Descriptions 6
How To Use 6-7
Cleaning Tools 8
If You Have a Problem 13
Important Safeguards 3-4
Lubrication 11
Maintenance 8-13
Cleaning Filters 9-10
Clearing Blockages 14
Emptying Dirt Cup 8-9
Replacing Agitator Brush Roll 11
Replacing Belt 10-11
Replacing Powered Hand Tool
Agitator Brush Roll 12
Replacing Power Hand Tool Belt 12
Thermal Protector 13

When using an electrical appliance, always follow basic precautions, including the following:

READ ALL INSTRUCTIONS BEFORE USING THIS APPLIANCE

WARNING: To reduce the risk of fire, electric shock, or injury:

- Do not use outdoors or on wet surfaces.
- Close supervision is necessary when any appliance is used by or near children. Do not allow vacuum cleaner to be used as a toy or to run unattended at any time.
- Keep hair, loose clothing, fingers, feet and all parts of body away from openings, rotating agitator and other moving parts. Do not operate cleaner in bare feet or when wearing open toe shoes or sandals.
- Do not pick up anything that is burning or smoking, such as cigarettes, matches, or hot ashes.
- Do not use to pick up flammable or combustible materials such as gasoline or fine wood sandings or use in areas where they may be present.
- Avoid picking up hard, sharp objects with the cleaner. They may damage the cleaner.
- Always turn off this appliance before connecting or disconnecting hose.
- Unplug cleaner before connecting the powered hand tool.
- Do not use without dirt cup or filters in place. Empty cup and clean filters fre-quently when picking up very fine materials such as powder.
- Use extra care when cleaning on stairs.
- Do not put any object into openings. Do not use with any opening blocked; keep free of dust, lint, hair, or anything that may reduce air flow.
- Do not pull or carry by cord, use cord as a handle, close door on cord or pull cord around sharp edges or corners. Do not run appliance over cord. Keep cord away from heated surfaces.
- Always disconnect cord from electrical outlet before servicing the cleaner.
- Unplug cleaner when not in use. Turn off all controls before unplugging.
- Do not unplug by pulling on cord. To unplug, grasp the plug, not the cord. Never handle plug or appliance with wet hands.
- Hold onto the plug while cord is being rewound to prevent cord from whipping.
- The use of an extension cord is not recommended.
- Do not use with damaged cord or plug.
- Use vacuum cleaner only for its intended use as described in the instructions.

Save these instructions!

Important for users in the UK.

The wires in the mains lead of this appliance are coloured in accordance with the following code:

BLUE-neutral BROWN-live

As the colours of the wires in the mains lead of this appliance may not correspond with the coloured markings identifying the teminals in your plug.

VERY IMPORTANT:

Neither wire is to be connected to the earth terminal of a 3 pin plug. If a 13 amp plug is fitted. fit a 13 amp BS 1362 fuse. If any other type of plug is used. protect with a 15 amp fuse at the distribution board.

For appliances which come with mains lead and plug moulded on: the plug moulded on to the cord incorporates a fuse.

For replacement use a 13 amp BS 1362 fuse.

Only ASTA approved or certified fuses should be used.

The fuse cover/carrier must be replaced in the event of changing the fuse.

The plug must not be used if the fuse cover/carrier is lost. A replacement cover/carrier must be obtained from authorized electrical goods retailers.

WARNING! Should it become necessary to replace the moulded on plug then the detective plug should be destroyed to avoid any possible shock hazard that could occur should such a plug be inserted into a 13 amp socket elsewhere in the house.

Assembling cleaner

Carton contents

1-1

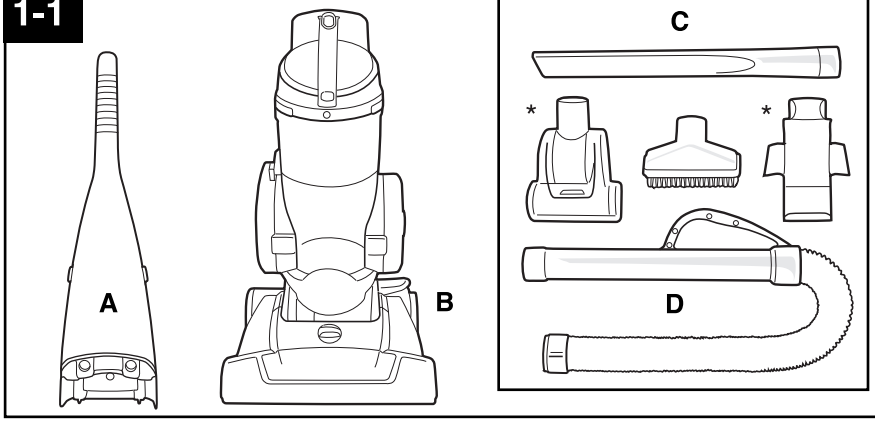

A. Handle section and screw (taped to handle)
B. Cleaner body
C. Cleaning tools
D. Hose

*Apply only for VUP861NBT/ V-UP861NBT/VTUP61NBT

Remove all parts from carton and identify each item shown.
Make sure all parts are located before disposing of packing materials.

1-2

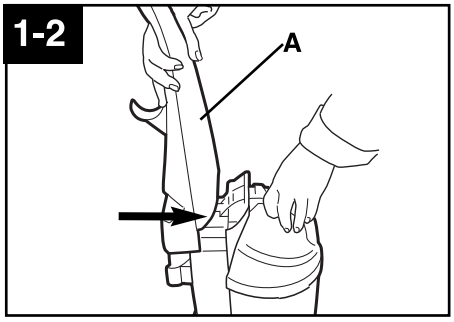

Attach handle

Slide handle section (A) onto back of handle.

1-3

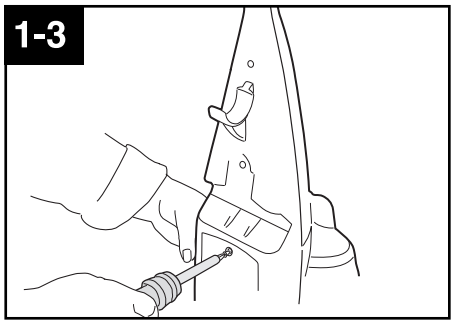

Push screw into hole on back of handle. Tighten screw securely with a Phillips screwdriver.

1-4

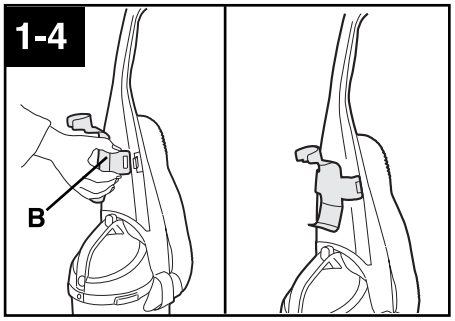

Position tools

The holder (B) for the powered hand tool snaps onto the tabs on the front of the handle. Be sure the holder is properly positioned as shown in the drawing.

*Apply only for VUP861NBT/ V-UP861NBT/VTUP61NBT

1-5

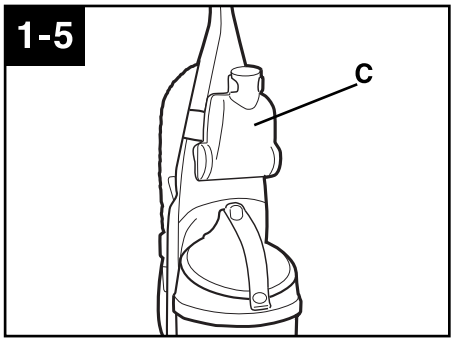

Place the powered hand tool (C) into the holder as shown.

* *Power hand tool only apply for VUP861NBT/V-UP861NBT/ VTUP61NBT*

1-6

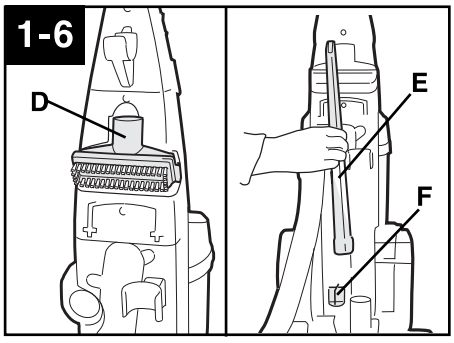

Place combination tool (D) into opening on back of handle.
The crevice wand (E) slides over the post (F) on the back of the cleaner.

1-7

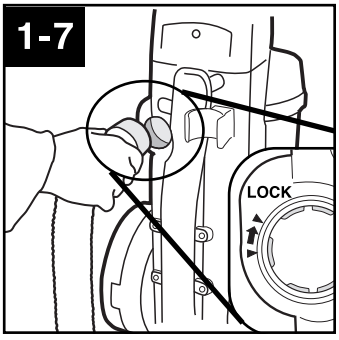

Position hose

Align end of hose with projections over slots in dirt duct on back of cleaner. Twist to lock in place.
The hose connector allows the hose to swivel.

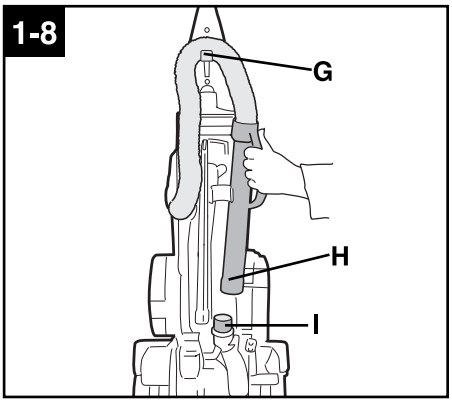

Wrap hose over hook (G).
Push hose end (H) firmly onto tube (I) as shown.

2. How to use

Cleaner description

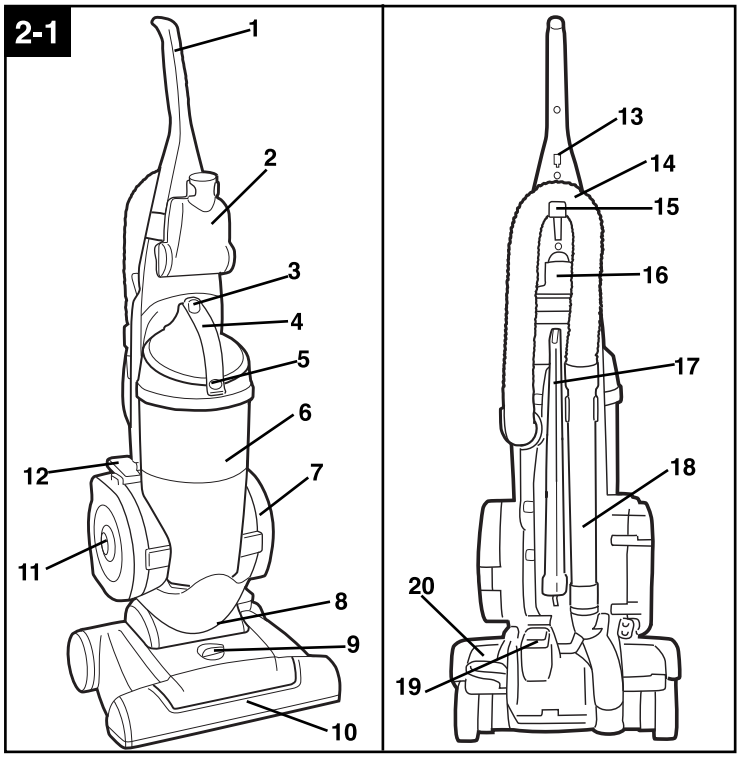

1. **Handle grip**
2. **Powered hand tool**
   Apply for VUP861NBT/ V-UP861NBT/VTUP61NBT
3. **Dirt cup release button**
4. **Carrying handle/Dirt cup handle**
5. **Air flow indicator**
6. **Dirt cup assembly**
7. **Long lasting HEPA filter**
8. **Body cover**
9. **Nozzle control knob:** turn knob to correct setting for height of carpet being cleaned.
10. **Furniture nozzle:** helps prevent cleaner from marking furniture.
11. **Cord reel**
12. **Cord rewind button:** press button to rewind cord for storage. **Hold plug until cord is rewound.**
13. **Cord hook**
14. **Hose**
15. **Hose holder**
16. **Combination tool**
17. **Crevice wand**
18. **Hose handle**
19. **ON/OFF pedal**
20. **Handle release pedal:** step on pedal to lower handle to operating or low positions.

Operate cleaner only at voltage specified on data plate on back of cleaner.

This cleaner is intended for household use.

Polarized plug

To reduce the risk of electric shock, this appliance has a polarized plug (one blade is wider than the other). This plug will fit in a polarized outlet only one way. If the plug does not fit fully in the outlet, reverse the plug. If it still does not fit, contact a qualified electrician to install the proper outlet. Do not change the plug in any way.

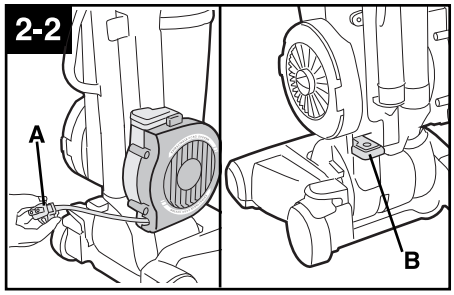

ON-OFF pedal

Grasp end of plug (A) and pull to desired cord length. Plug cord into electrical outlet.
To turn cleaner ON, step on ON/OFF pedal (B) once.
To turn cleaner OFF, step on pedal again.

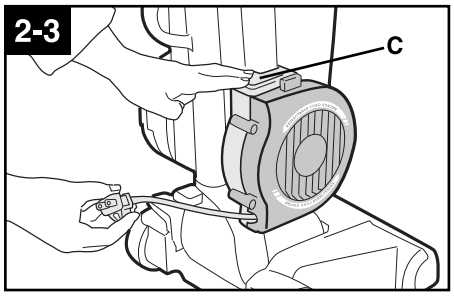

Cord rewind

Grasp the end of the plug and pull to release cord from cord reel. After desired cord length is reached, the cord will lock into position.
To return cord for storage, **hold plug** and press on button (C) at top of cord reel. **To prevent cord from whipping, hold plug until cord is rewound.**

2-4

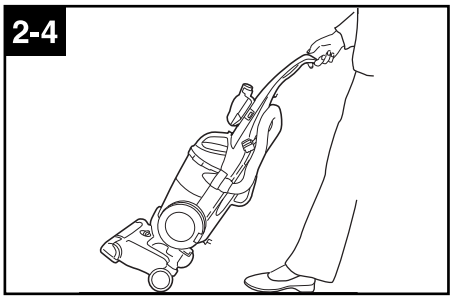

Transporting cleaner

To move your cleaner from room to room, put handle in upright position, tilt cleaner back on rear wheels and push forward.

2-5

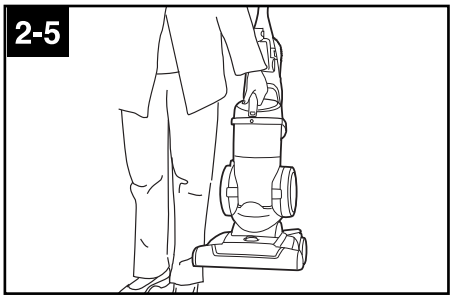

Carrying cleaner

The cleaner can also be moved by using the carrying handle, located on the top of the dirt cup.

2-6

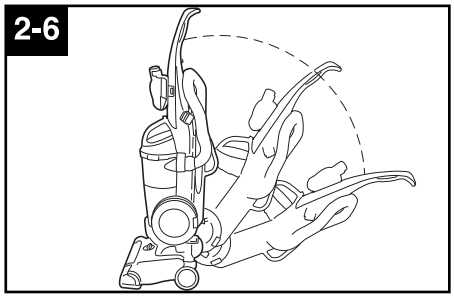

Handle positions

The handle of your cleaner has three positions; **upright**for storage and when using cleaning tools; **operating position** for general operation on carpet and floors; **low** for reaching under low furniture. Step on handle release pedal to lower handle.

2-7

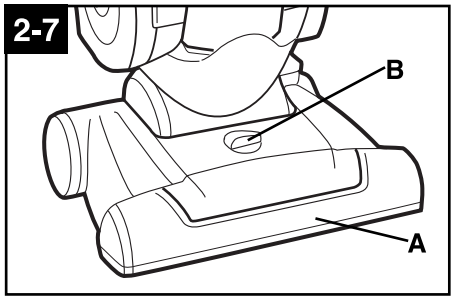

Carpet height adjustment

The cleaning of carpet and rugs takes place at the nozzle (A).

When it is necessary to raise and lower the nozzle for various carpet pile heights, place handle in upright position and turn the nozzle control knob (B) to the desired setting.

The nozzle will not move into the adjusted position until the cleaner handle is lowered to the operating position.

2-8

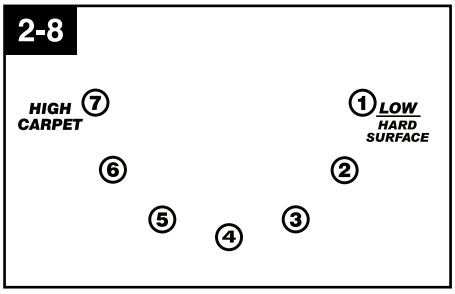

Settings

For maximum cleaning performance, the following carpet height settings are recommended:

- **Lowest setting:** for all types of carpet and hard surface flooring.

Note: If the cleaner is difficult to push, turn knob to the next higher setting.

- **Higher settings:** for very deep pile carpet, where easier pushing effort is desired, while maintaining good cleaning performance.

2-9

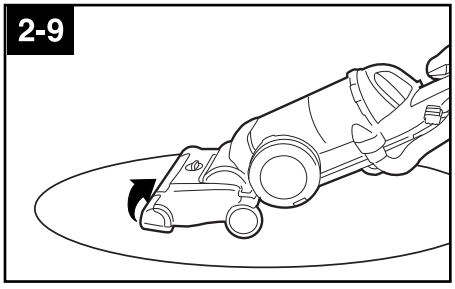

Cleaning lightweight flexible rugs

Stand on one end of rug and move cleaner toward other end or edge. Before reaching edge, push down on handle. This will lift up the nozzle (front of cleaner) as shown and will prevent rug from clinging to cleaner. Continue to lift up nozzle so that when you have reached the edge, it is completely off the rug. Move cleaner back to start again, lower nozzle, and use only forward strokes.

2-10

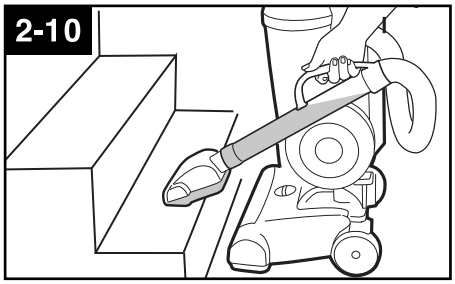

Stair cleaning

Use the hose or power hand tool for stair cleaning. Clean from bottom to top.

* *Power hand tool only apply for VUP861NBT/V-UP861NBT/VTUP61NBT*

When using cleaning tools, the agitator will continue to rotate.

CAUTION: To avoid personal injury or unnecessary wear to carpet, and to prevent the cleanerfrom falling, always place it at bottom of stairs.

Cleaning tools

Tools allow for cleaning surfaces above the floor and for reaching hard to clean areas.

The cleaner is ready for tool use when **handle is in upright position**.

CAUTION: The agitator continues to rotate while cleaner handle is in upright position. Avoid tipping cleaner or setting it on furniture, fringed area rugs or carpeted stairs during tool use.

How to clean tools

To clean the hose and powered hand tool, wipe off dirt with a cloth dampened in a mild detergent. Rinse with a damp cloth. DO NOT submerge powered hand tool in water.

Cleaning tools may be washed in warm water with a detergent. Rinse and air dry before using.

2-11

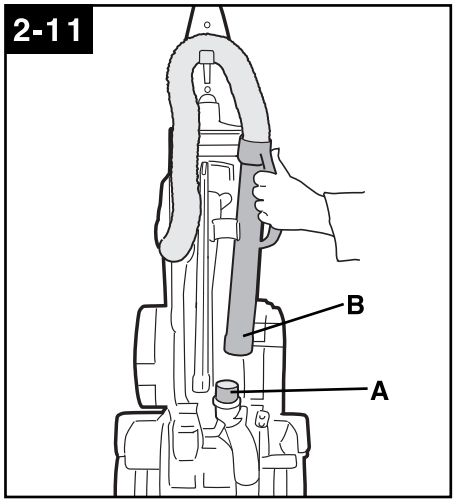

Removing hose

When using cleaning tools, **cleaner handle should be in the upright position.** Also, **turn cleaner OFF before disconnecting and connecting hose to hose tube (A).**

To use hose, lift hose end (B) as shown.

When you are finished cleaning with the tools, reposition hose end onto tube.

2-12

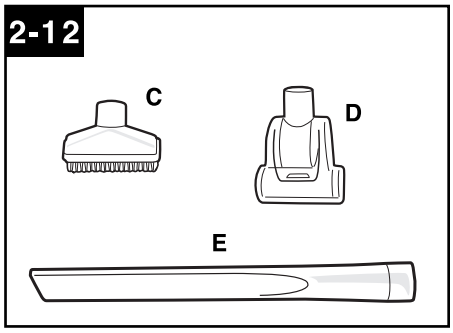

Select proper tool

C. Combination tool use with brush attached for carved furniture, table tops, books, lamps, lighting fixtures, venetian blinds, baseboards, shutters, and registers.
Remove brush to clean upholstered furniture, draperies, mattresses, clothing, and carpeted stairs.

D. Powered hand tool may be used for upholstered furniture, draperies, mattresses, clothing, automobile interiors, and carpeted stairs.

* *Power hand tool only apply for VUP861NBT/V-UP861NBT /VTUP61NBT*

E. Crevice wand may be used in tight spaces, corners and along edges in such places as dresser drawers, upholstered furniture, stairs and baseboards. It can also be used for extra reach with the dusting brush.

2-13

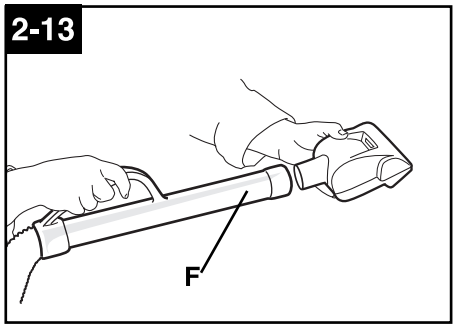

Attach wand and tools

Attach tool to the hose (F) by pushing it firmly onto hose.

Twist wand or tool slightly to tighten or loosen the connection.

* *Power hand tool only apply for VUP861NBT/V-UP861NBT /VTUP61NBT*

2-14

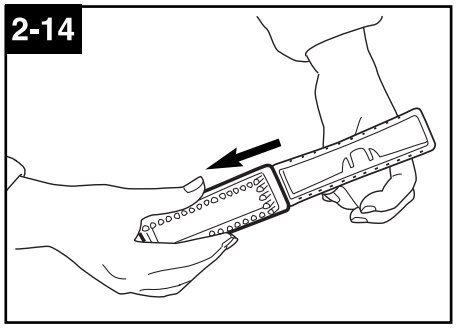

Combination tool

Slide brush to remove.

To replace brushes, align brush with grooves on tool. Slide brush into place.

3. Maintenance

Familiarize yourself with these home maintenance tasks as proper use and care of your cleaner will ensure continued cleaning effectiveness.

3-1

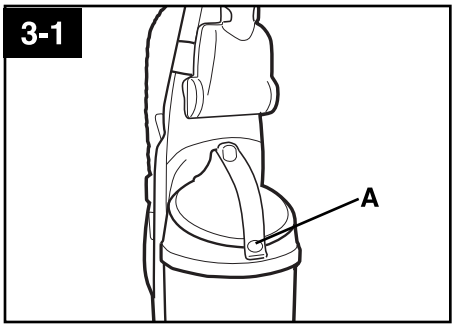

Air flow indicator

The indicator (A) will show yellow when the dirt cup is full or there is a blockage or clog in the system. **Turn cleaner OFF and unplug.** Check the dirt cup and empty if necessary. Turn cleaner back on. If the indicator still shows yellow, follow the instructions under “Clearing blockages”.

3-2

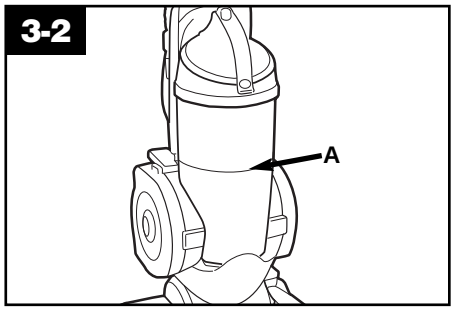

Dirt cup

When to empty

It is recommended that the dirt cup be emptied before the dirt reaches the fill line (A), or after every use if preferred.

CAUTION: Very fine materials, such as face powder or cornstarch, may seal the filter and cause loss of suction. When using the cleaner for this type of dust, empty the cup and clean the filters often.

3-3

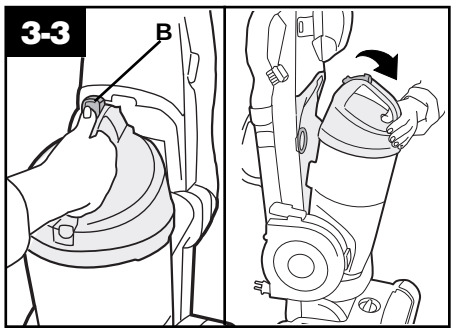

How to empty

Disconnect cleaner from electrical outlet. Do not use the cleaner without dirt cup or filters in place.

Press dirt cup release button (B) and pivot cup out.

3-4

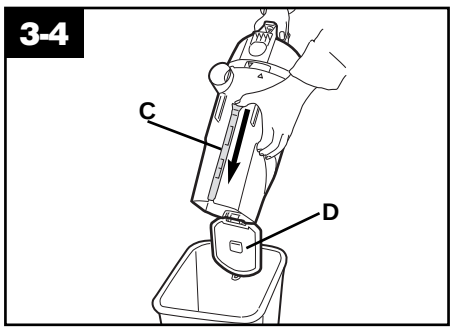

Holding dirt cup over trash receptacle, press dirt cup door release rod (C) on back of dirt cup to open dirt cup door (D).

Empty dirt cup.

Close and snap dirt cup door shut.

3-5

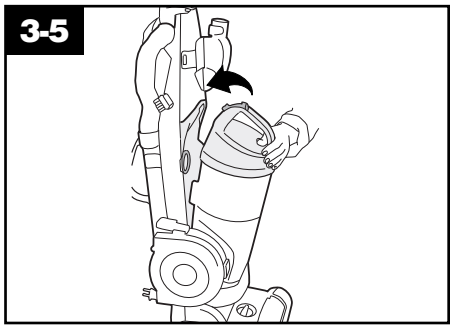

Place bottom of dirt cup in first. Pivot cup into cleaner body.

Press dirt cup firmly until you hear a click to ensure that it is locked in place.

Cleaning filters

Lifetime HEPA filter

If you wish to clean this filter, it may be removed and cleaned.

3-6

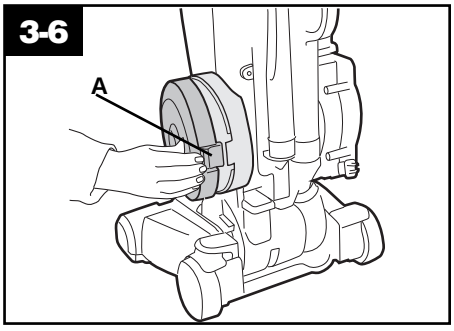

Press on the tab (A) located on the side of the filter cover to remove.

3-7

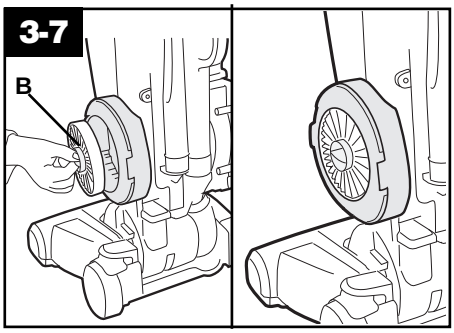

Remove the HEPA filter (B) and brush with the combination tool to clean or tap side of filter against a trash receptacle. Return the HEPA filter into the filter cavity.

3-8

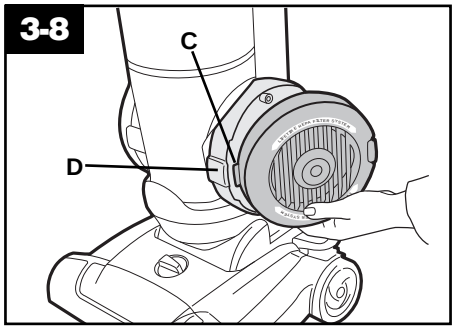

Align tab (C) on filter cover with slot (D). Press cover closed until you hear a snap.

Dirt cup filter assembly

How to clean

Disconnect cleaner from electrical outlet. Do not use cleaner without dirt cup or filters in place.

3-9

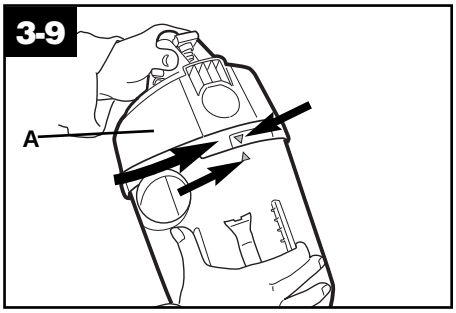

Remove dirt cup as described in Fig. 3-3.

Twist dirt cup lid (A) counterclockwise until arrows on lid and dirt cup align. Remove lid with filter cartridge from dirt cup.

3-10

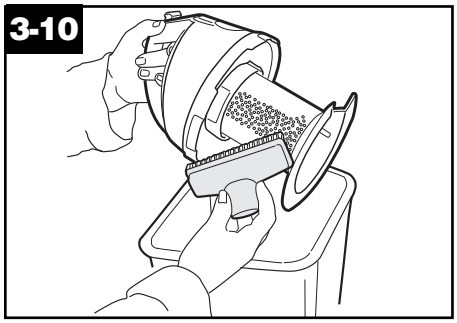

Dirt and debris can then be cleaned from the filter cartridge by brushing with the cleaner's combination tool.

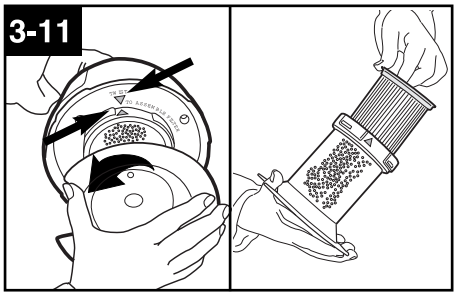

Twist the filter cartridge counter-clockwise, aligning arrows on lid and cartridge. Remove pleated filter from inside cartridge.

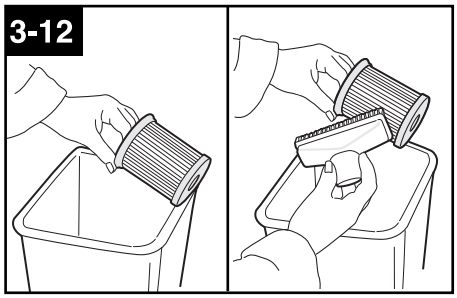

Tap filter against side of trash container to remove dirt or brush with the cleaner's combination tool.

Return pleated filter to inside the filter cartridge.

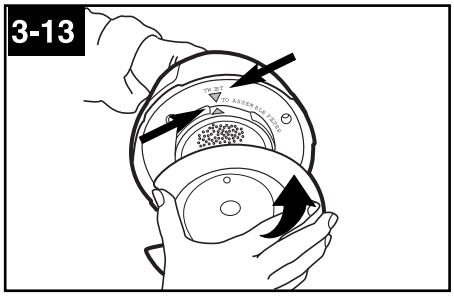

Replace the filter assembly in the dirt cup lid, aligning arrows and twisting clockwise to lock into position.

Replace dirt cup lid onto dirt cup by aligning arrows on lid and dirt cup and twisting clockwise.

Replace dirt cup as described in Fig. 3-5.

Belt replacement

The belt on your vacuum cleaner causes the agitator to rotate and is important for the effective operation of the cleaner. The belt is located under the bottom plate of the cleaner and should be checked from time to time to be sure it is in good condition.

When to replace

Disconnect cleaner from electrical outlet.

To check belt, remove bottom plate as shown in Fig. **3-14**. Replace belt if it is stretched, cut or broken.

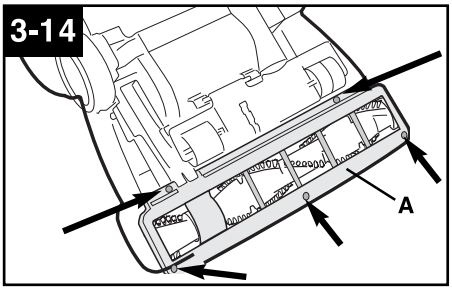

How to replace

Disconnect cleaner from electrical outlet.

Removing bottom plate

Place handle in lowest position and turn cleaner over so bottom side is up. Remove the 5 screws as shown with a Phillips screwdriver. Lift off bottom plate (A).

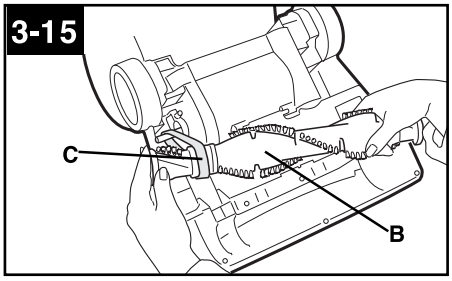

Removing belt

Remove agitator brush roll (B) and used belt (C).

Discard used belt.

3-16

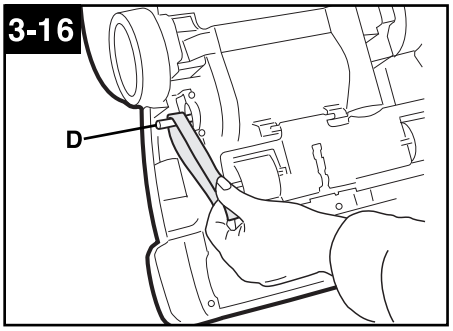

Installing new belt

With lettering on outside of belt, and positioned as shown, slide new belt over motor pulley (D).

3-17

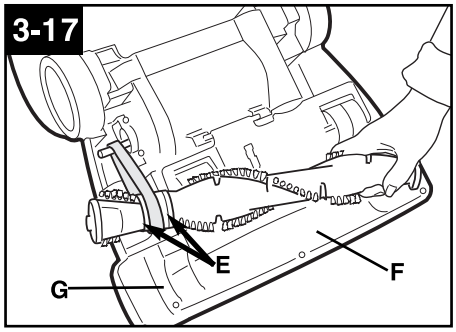

Replacing agitator brush roll

Insert agitator through belt and place belt in belt guide (E) on agitator.

Should the agitator shield (F) become dislodged while replacing the belt or the agitator, reposition it as shown noting the placement of its belt guide (G).

3-18

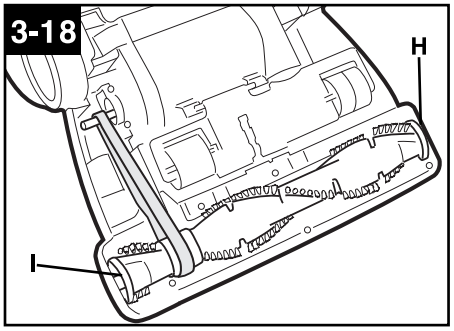

Securing agitator

Grasp agitator firmly and fit it into position by first sliding end opposite the belt into the rectangular slot (H) on side of cleaner.

Pull other side of agitator (I) into place.

Turn agitator making sure belt turns freely and is not pinched between agitator and bottom of cleaner.

3-19

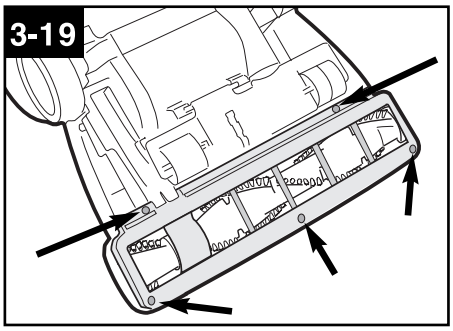

Replacing bottom plate

Reposition bottom plate and 5 Phillips head screws. Tighten screws securely.

The agitator brush roll

When to replace

When agitator brushes are worn, the agitator should be replaced.

To check condition of brushes, **disconnect cleaner from electrical outlet.**

3-20

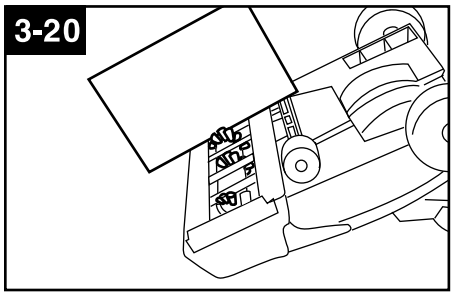

Move edge of a card across bottom plate while turning agitator. To maintain cleaning effectiveness, replace agitator if brushes do not touch card.

Disconnect cleaner from electrical outlet.

Remove bottom plate, belt and agitator following directions in “The belt” section beginning with Fig **3-14** .

Discard old agitator.

Continue following the directions in “The belt” section to reposition belt, new agitator and bottom plate.

Lubrication

The motor is equipped with bearings that contain sufficient lubrication for the life of the motor. The addition of lubricant could cause damage. **Therefore, do not add lubricant to motor bearings.**

Thermal protector

An internal thermal protector has been designed into your cleaner to protect it from overheating.

When the thermal protector activates, the cleaner will stop running. If this happens, proceed as follows:

1. Turn the cleaner OFF and disconnect it from the electrical outlet.

2. Check filters for dirt accumulation.

3. Refer to “Clearing blockages” section.

4. When cleaner is unplugged and the motor cools for 30 minutes, the thermal protector automatically resets and cleaning may continue.

If the thermal protector continues to activate after following the above steps, your cleaner may need servicing.

Powered hand tool

Only apply for VUP861NBT/ V-UP861NBT/VTUP61NBT

Agitator brush roll replacement

When agitator brushes are worn, the brush roll should be replaced.

3-21

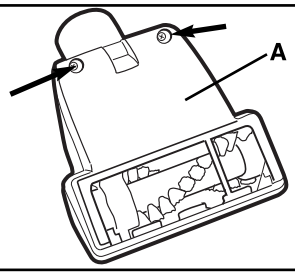

How to replace

1. **Remove tool from hose** and turn it so bottom faces up. Using a Phillips screwdriver, remove the (2) screws on either side of tool and remove bottom plate (A).

3-22

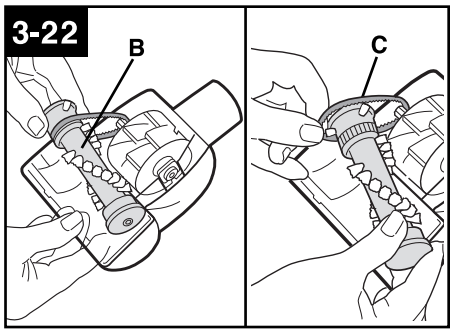

2. Remove agitator (B) and discard.
3. Inspect belt to ensure that it is in good condition. If belt is cracked, gouged or broken, replace it (see following section).
4. Insert brush roll through belt and position belt over gear teeth (C) on brush roll.

3-23

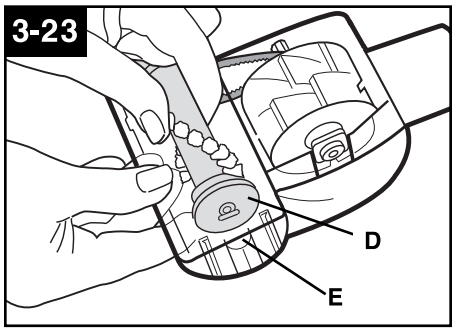

5. With curved ends down (arrows pointing up), slide end plates (D) of brush roll into slots (E) on tool. Turn agitator to make sure it rotates freely.

3-24

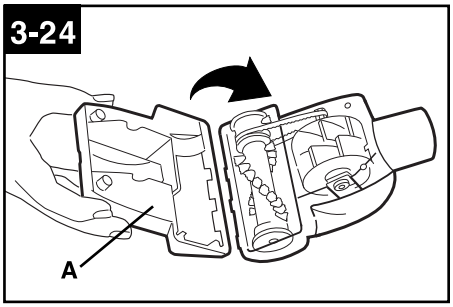

6. To replace bottom plate (A), insert the four tabs on edge of bottom plate into slots on front of tool. Pivot bottom plate down to close. Replace (2) screws on either side of tool.

* *Power hand tool only apply for VUP861NBT/V-UP861NBT/ VTUP61NBT*

Powered hand tool Belt replacement Inspect the belt

The powered hand tool belt is designed to last a long time and is not normally replaced. However, if the belt is cracked, gouged or br o-ken, it should be replaced.

3-25

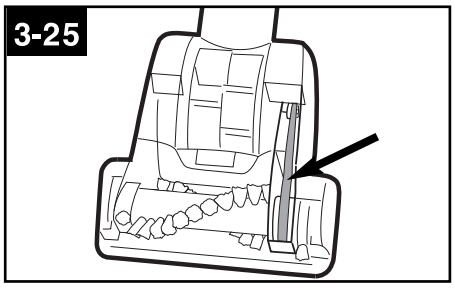

Remove tool from hose. The belt can be seen through the top of the nozzle or by removing the bottom plate (Figs. 3-21).

Replace belt

1. **Remove tool from hose.** Remove bottom plate and brush roll as described in Figs. 3-21 and 3-22.

3-26

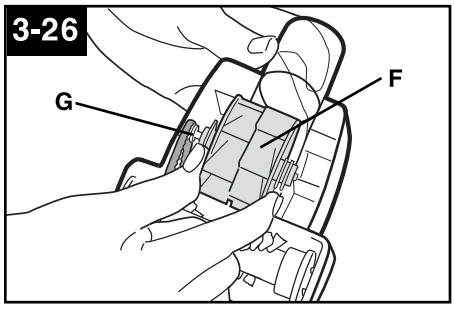

2. Grasp turbine (F) and pull to remove.
3. Remove belt from turbine pulley (G). Replace with new belt.

3-27

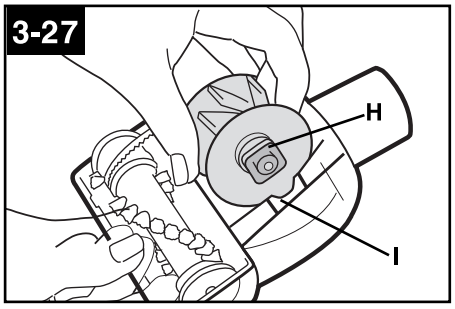

4. Press turbine retainers (H) into grooves (I) on tool housing.
5. Replace brush roll and bottom plate as described in Figs. 3-22 through 3-24.

* *Power hand tool only apply for VUP861NBT/V-UP861NBT/ VTUP61NBT*

4. If you have a problem

If a minor problem occurs, it usually can be solved quite easily when the cause is found by using the check - list below.

Problem: Cleaner won't run

Possible Cause

Possible Solution

- **Not firmly plugged in**
- *Plug unit in firmly*
- **No voltage in wall receptacle**
- *Check fuse or breaker*
- **Blown fuse or tripped breaker**
- *Replace fuse or reset breaker*
- **Thermal protector activated**
- *Unplug cleaner and allow cleaner to cool for 30 minutes (this will reset the thermal protector)*

Problem: Cleaner/tools won't pick up

Possible Cause

Possible Solution

- **Broken or worn belt**
- *Replace belt*
- **Agitator brush roll worn**
- *Replace brush roll*
- **Dirt cup full**
- *Empty dirt cup*
- **Filters dirty**
- *Clean filters*
- **Incorrect carpet height setting**
- *Move nozzle control knob to lower setting*
- **Blockage in air flow passages**
- *Clear blockage*

Problem: Cleaner hard to push

Possible Cause

Possible Solution

- **Incorrect carpet height setting**
- *Move carpet height control to a higher setting*

Problem: Smoky/burning smell detected

Possible Cause

Possible Solution

- **Belt broken or stretched**
- *Replace agitator brush roll belt as described in Figs. 3-14 through 3-19 in the Maintenance section*

Problem: Powered hand tool brush roll won't turn

Possible cause

Possible solution

- **Too much pressure being applied to tool**
- *Continue using tool applying* ***light*** *pressure.*
- **Blockage in turbine channel**
- *Remove blockage.*
- **Broken or worn belt**
- *Replace belt*
- **Low cleaner suction**
- *Check items under "Cleaner won't pick up".*

Clearing blockages

Disconnect cleaner from electrical outlet.

Low suction or pick up may be due to a blockage in the system. Refer to the following steps to check for blockages **continuing with each step until the blockage is found:**

1. Check fullness of dirt cup; empty if needed.

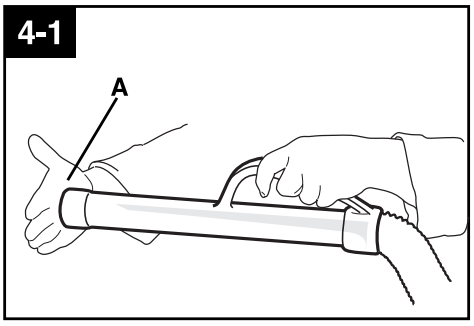

Checking airflow path

2. Plug cleaner in and turn ON. Check for suction at end of hose (A).

If there is **suction**, continue with step 3.

If there is **no suction**, check for blockage in hose and dirt tube as follows:

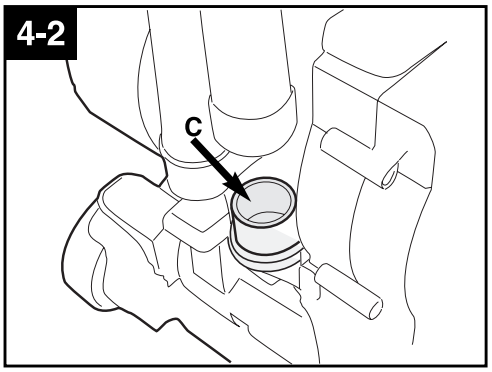

3. **Turn cleaner OFF and unplug.**

Check connection at hose tube (C); remove any blockage.

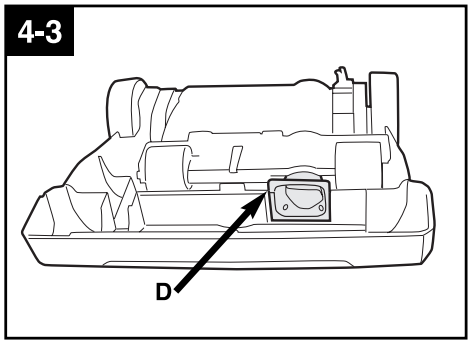

Checking under bottom plate

4. **Turn cleaner OFF and unplug.**

5. Remove bottom plate, belt and agitator (Figs. 3-15 and 3-16).

Look into opening (D) for blockages and remove.

6. Remove agitator shield (see Fig. 3-18) and remove any loose debris which may have accumulated under it.

If a blockage occurs during powered hand tool use:

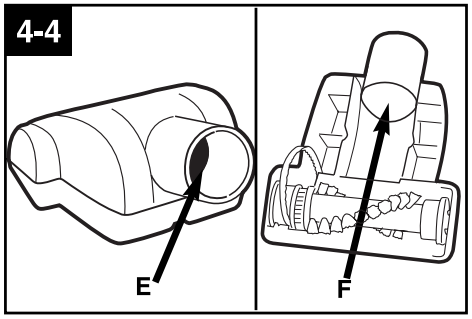

11. **Disconnect powered hand tool from hose.** Check tool connector opening (E) for blockage and remove.

Remove bottom plate and turbine as described in Figs. 3-21 and 3-26.

Remove any blockage from turbine channel (F).

Replace belt, turbine, brush roll, and bottom plate.

* *Power hand tool only apply for VUP861NBT/V-UP861NBT/ VTUP61NBT*



Disposal of your old appliance

1. When this crossed-out wheeled bin symbol is attached to a product it means the product is covered by the European Directive 2002/96/EC.
2. All electrical and electronic products should be disposed of separately from the municipal waste stream via designated collection facilities appointed by the government or the local authorities.
3. The correct disposal of your old appliance will help prevent potential negative consequences for the environment and human health.
4. For more detailed information about disposal of your old appliance, please contact your city office, waste disposal service or the shop where you purchased the product.

LG Electronics Inc.

http:// www.lge.com

The LGE Customer Support Team can be contacted as follows:		
For all Consumer enquiries Line opening hours **Monday-Friday** 09:00 to 20:00, **Saturday** 09:00 to 18:00, **Sunday** 10:00 to 16:00	**Phone**	**0870 873 LGLG(5454)** (National call Rate)
	E-Mail	**www.lgelectronics.co.uk,** then select "CONTACT US"
	Fax	**0870 872 7337**