FOR LG CUSTOMER SERVICE:
1-888-LGCANADA
Or visit us on the Web at: **http://www.lg.ca**

EL SERVICIO DE ATENCIÒN AL CLIENTE DE LG:
1-888-LGCANADA
Ou visitez notre site Web à l'adresse:
http://www.lg.ca

POUR SERVICE À LA CLIENTÈLE DE LG:
1-888-LGCANADA
O visítenos en la Web en: **http://www.lg.ca**

FRENCH DOOR REFRIGERATOR

USER'S GUIDE & INSTALLATION INSTRUCTIONS

Please read this guide thoroughly before operating and keep it handy for reference at all times.

RÉFRIGÉRATEUR À PORTES FRANÇAISES

GUIDE D'UTILISATION ET INSTRUCTIONS D'INSTALLATION

Veuillez lire ce guide attentivement avant la mise en service de l'appareil et gardez-le à portée de main pour le consulter en cas de besoin.

REFRIGERADOR DE PUERTA FRANCES

GUÍA PARA EL USO E INSTRUCCIONES DE INSTALACIÓN

Lea detenidamente estas instrucciones antes utilizar el frigorífico y guárdelas como referencia para el futuro.

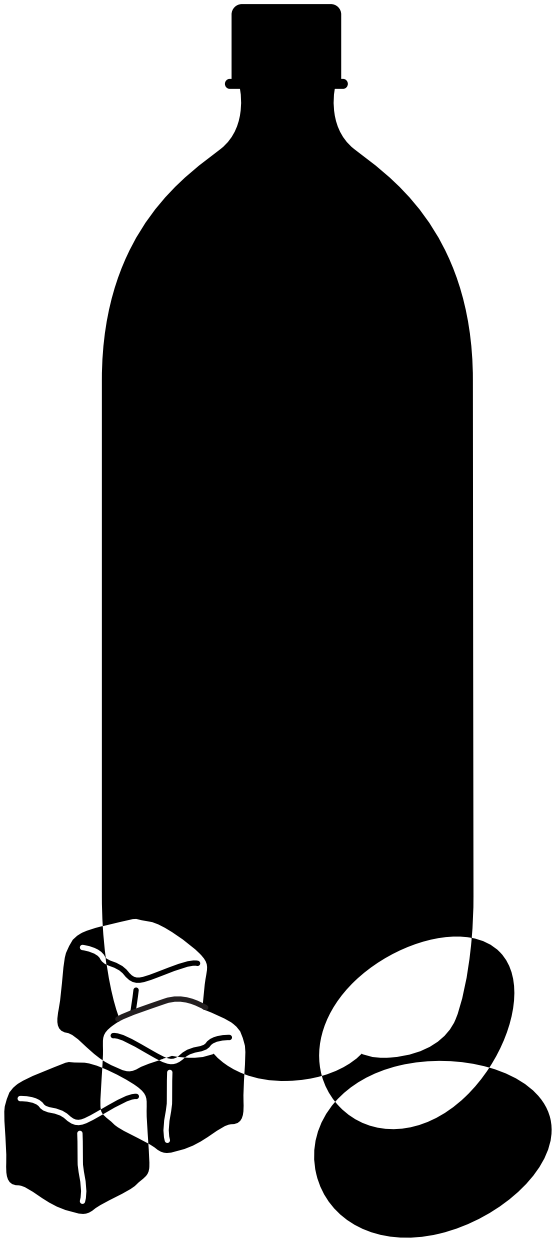

Models/Modelos/Modèles

LFX25980**, LFX21980**

P/No. MFL37933520

INTRODUCTION

IMPORTANT SAFETY INFORMATION

Basic Safety Precautions 3
CFC Disposal 4
How to Connect Electricity 5

PARTS AND FEATURES

Special Features 6
Key Parts and Components 7

INSTALLATION

Choose the Proper Location 8
Clearances 8
Flooring 9
Handle Removal 9
Door and Drawer Removal 10
Connecting the Water Supply 16
Connecting the Water Lines 16
Leveling the Refrigerator Doors 18
Starting 19

HOW TO USE

Control Panel Features 20
The LCD Display 21
Adjusting the Temperatures and Display 22
Operating the Dispenser 23
Setting the Functions 24
In-Door Ice Bank 25
Automatic Icemaker 26
OptiBin ™ Crisper Humidity Control 27
Storing Foods 27
Location of Foods 28
Shelf Height Adjustment 29

CARE AND CLEANING

Removing and Replacing Components 30
Cleaning the Refrigerator 34
General Information 34
Replacing the Water Filter.....35

TROUBLESHOOTING

Before Calling for Service 36

SPECIFICATIONS

Key Dimensions and Specifications 40

WARRANTY

Product Registration Information 41

THANK YOU!

Congratulations on your purchase and welcome to the LG family. Your new LG French Door Refrigerator combines advanced cooling technology with simple operation and high efficiency. Follow the operating and care instructions in this this manual and your refrigerator will provide you with many years of reliable service.

BASIC SAFETY PRECAUTIONS

This guide contains many important safety messages. Always read and obey all safety messages.

⚠ This is the safety alert symbol. It alerts you to safety messages that inform you of hazards that can kill or hurt you or others or cause damage to the product. All safety messages will be preceded by the safety alert symbol and the hazard signal word DANGER, WARNING, or CAUTION. These words mean:

⚠DANGER You **might** be killed or seriously injured if you don't follow instructions.

⚠WARNING You **can** be killed or seriously injured if you don't follow instructions.

⚠CAUTION Indicates an imminently hazardous situation which, if not avoided, **may** result in minor or moderate injury, or product damage.

All safety messages will identify the hazard, tell you how to reduce the chance of injury, and tell you what can happen if the instructions are not followed.

⚠WARNING

To reduce the risk of fire, electric shock, or injury to persons when using your product, basic safety precautions should be followed, including the following.

Read all instructions before using this appliance.

- NEVER unplug your refrigerator by pulling on the power cord. Always grip the plug firmly and pull it straight out from the outlet.
- Repair or replace immediately all electric service cords that have become frayed or otherwise damaged. Do not use a cord that shows cracks or abrasion damage along its length or at either the plug or connector end.
- When moving your refrigerator away from the wall, be careful not to roll over or damage the power cord.
- DO NOT store or use gasoline or other flammable vapors and liquids in the vicinity of this or any other appliance.
- DO NOT allow children to climb, stand, or hang on the refrigerator doors or shelves in the refrigerator. They could damage the refrigerator and seriously injure themselves.
- Keep fingers out of pinch point areas; clearances between the doors and cabinet are necessarily small. Be careful closing doors when children are in the area.
- Unplug your refrigerator before cleaning or making any repairs.
  NOTE: Service should be performed by a qualified technician.
- Before replacing a burned-out light bulb, unplug the refrigerator or turn off power at the circuit breaker or fuse box in order to avoid contact with a live wire filament. (A burned-out light bulb may break when being replaced.)
  NOTE: Some models have LED interior lighting and service should be performed by a qualified technician.
  NOTE: Setting either or both controls to the OFF position does not remove power to the light circuit.
- When you are finished, reconnect the refrigerator to the electrical source and reset the control (Thermostat Refrigerator Control, or Freezer Control, or Freezer Control, depending on the model) to the desired setting.
- This refrigerator must be properly installed in accordance with the **Installer Instructions** that were taped to the front of the refrigerator.
- After your refrigerator is in operation, do not touch the cold surfaces in the freezer compartment when hands are damp or wet. Skin may adhere to the extremely cold surfaces.
- In refrigerators with automatic icemakers, avoid contact with the moving parts of the ejector mechanism or with the heating element that releases the cubes. DO NOT place fingers or hands on the automatic icemaking mechanism while the refrigerator is plugged in.
- **Do not modify or extend the power cord length.** It will cause electric shock or fire.

BASIC SAFETY PRECAUTIONS (CONT.)

- DO NOT refreeze frozen foods which have thawed completely. The United States Department of Agriculture in Home and Garden Bulletin No. 69 says:

  …You may safely refreeze frozen foods that have thawed if they still contain ice crystals or if they are still cold—below 40°F (4°C).

  …Thawed ground meats, poultry, or fish that have any off-odor or off-color should not be refrozen and should not be eaten. Thawed ice cream should be discarded. If the odor or color of any food is poor or questionable, dispose of it. The food may be dangerous to eat.

Even partial thawing and refreezing reduces the quality of foods, particularly fruits, vegetables, and prepared foods. The eating quality of red meats is affected less than that of many other foods. Use refrozen foods as soon as possible to save as much of their quality as you can.

⚠DANGER

Risk of Child Entrapment

Discarded or abandoned refrigerators are dangerous, even if they will sit for just a few days. If you are disposing of your old refrigerator, please follow the instructions below to help prevent accidents.

Before you throw away your old refrigerator or freezer:

- Take off the doors.
- Leave the shelves in place so that children may not easily climb inside.

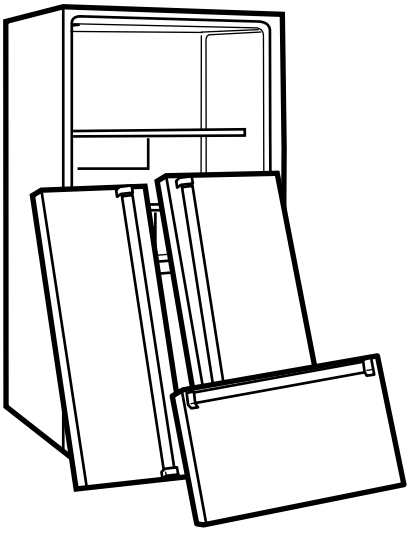

CFC DISPOSAL

Your old refrigerator may have a cooling system that used CFCs (chlorofluorocarbons). CFCs are believed to harm stratospheric ozone.

If you are throwing away your old refrigerator, make sure the CFC refrigerant is removed for proper disposal by a qualified servicer. If you intentionally release this CFC refrigerant, you can be subject to fines and imprisonment under provisions of environmental legislation.

HOW TO CONNECT ELECTRICITY

IMPORTANT: Please read carefully.

⚠WARNING

Electrical Shock Hazard

For personal safety, this appliance must be properly grounded. Have the wall outlet and the circuit checked by a qualified electrician to make sure the outlet is properly grounded.

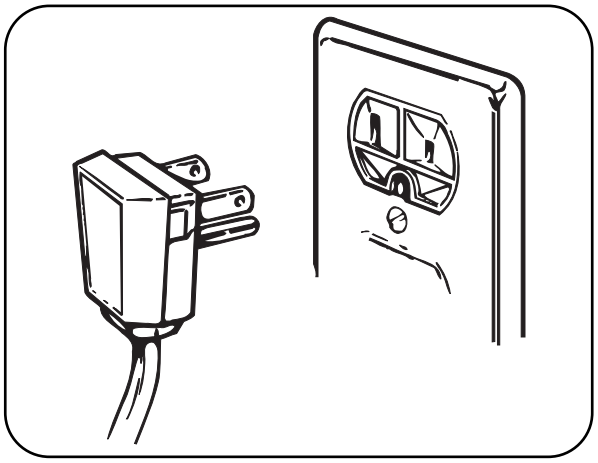

RECOMMENDED GROUNDING METHOD

The refrigerator should always be plugged into its own individual properly grounded electrical outlet rated for 120 volts, 60 Hz, AC only, and fused at 20 amperes. This provides the best performance and also prevents overloading house wiring circuits which could cause a fire hazard from overheated wires. It is recommended that a separate circuit serving only this appliance be provided.

Use a receptacle which cannot be turned off with a switch or pull chain. Do not use an extension cord. Where a standard two-prong wall outlet is encountered, it is your personal responsibility and obligation to have it replaced with a properly grounded three-prong wall outlet.

Do not, under any circumstances, cut or remove the third (ground) prong from the power cord.

Do not use an adapter plug.

NOTE: Some models have LED interior lighting and service should be performed by a qualified technician.

When you are finished, reconnect the refrigerator to the electrical source and reset the control (Thermostat, Refrigerator Control, or Freezer Control, depending on the model) to the desired setting.

USE OF EXTENSION CORDS

Because of potential safety hazards under certain conditions, we strongly recommend against the use of an extension cord.

However, if you still elect to use an extension cord, it is absolutely necessary that it be a UL-listed (USA), 3-wire grounding-type appliance extension cord having a grounding-type plug and outlet and that the electrical rating of the cord be 20 amperes (minimum) and 120 volts.

Use of an extension cord will increase the clearance needed for the back of the refrigerator.

SAVE THESE INSTRUCTIONS

SPECIAL FEATURES

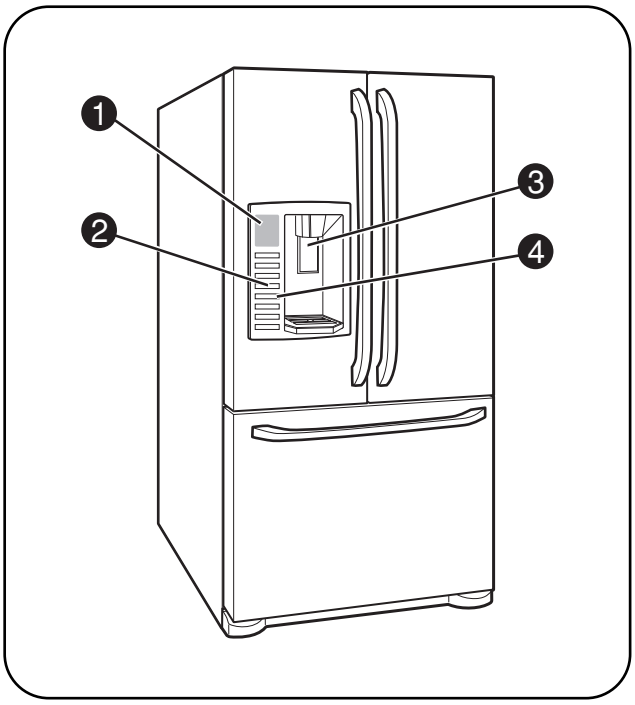

❶ CONTROL PANEL LCD DISPLAY SCREEN

Simple electronic controls are user-friendly. The LCD screen shows refirgerator and freezer temperatures, displays water filter status, dispenser information, and more.

❷ ICE PLUS

When this feature is activated, the freezer section will run at the coldest temperature for a 24- hour period to increase ice production by about 20 percent.

❸ FILTERED WATER AND ICE DISPENSER

The water dispenser offers fresh, chilled, filtered water through the door for quick refreshment. The ice dispenser offers cubed or crushed ice.

❹ DOOR ALARM

A warning alarm sounds in 30-second intervals when the refrigerator or freezer door is left open for more than 60 seconds.

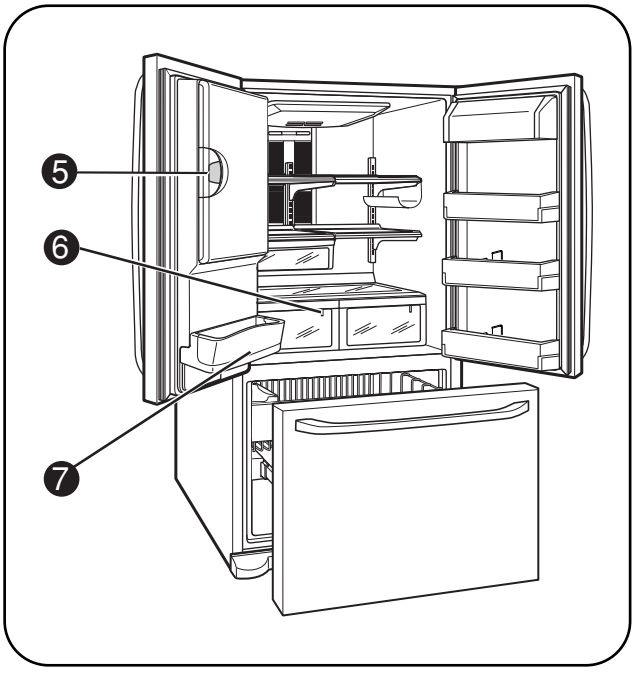

❺ IN-DOOR ICE BANK

The icemaker automatically produces 100–130 ice cubes in a 24-hour period to keep the ice dispenser fully supplied. The in-door design creates more shelf space.

❻ OPTIBIN ™ CRISPERS

LG's OptiBin ™ Crispers preserve humidity and help vegetables stay crisp.

❼ AUTO CLOSING HINGE

When you slightly push the door of the cool chamber, it is automatically closed. (The door is automatically closed within 40° of the opening angle.)

KEY PARTS AND COMPONENTS

In addition to the special features and components outlined in the **Special Features** section, there are several other important components that are referenced in this manual.

❶ ADJUSTABLE REFRIGERATOR SHELVING

The refrigerator compartment shelves are adjustable to allow flexibility for storage needs.

❷ MODULAR DOOR BINS

Three interchangeable bins can be arranged to suit your storage needs.

❸ SNACK PAN

The snack pan is ideal for storing breads, cold cuts, and snacks.

❹ REMOVABLE ICE STORAGE BIN

The ice storage bin can be removed to fill ice buckets, coolers, or pitchers.

❺ INTERIOR LAMPS

Two separate LED arrays light the freezer and refrigerator interiors.

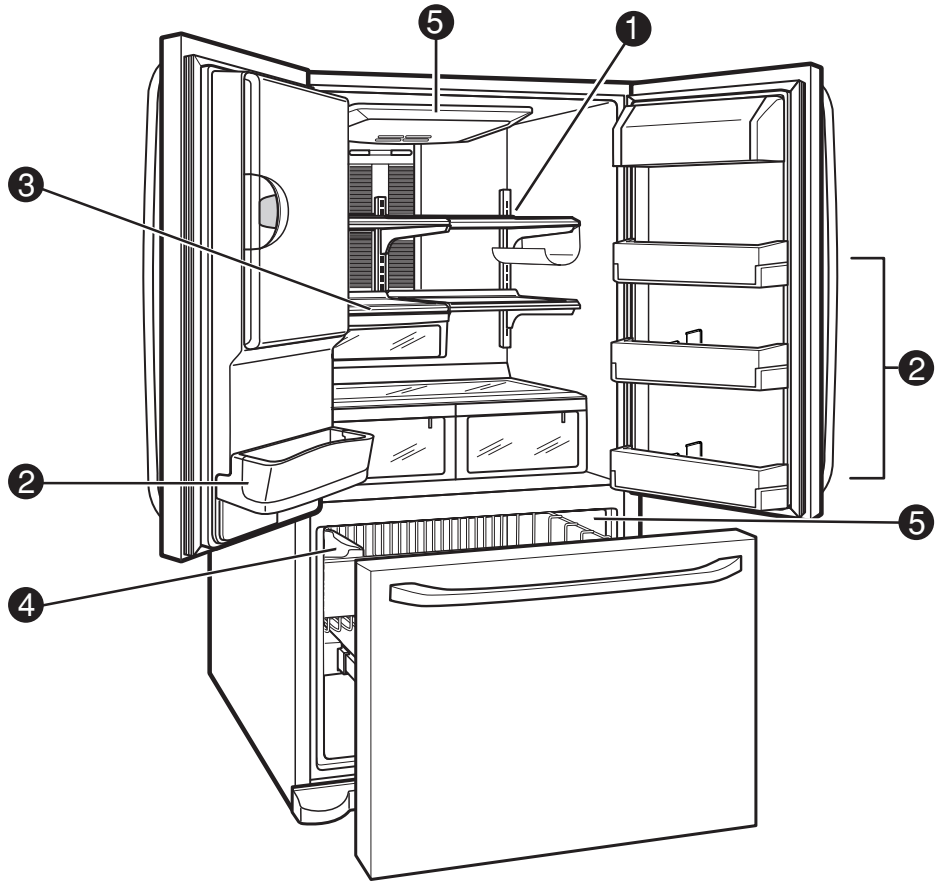

CHOOSE THE PROPER LOCATION

⚠WARNING

Excessive Weight Hazard

Two or more people are required when moving and unpacking the appliance.

- Store and install the refrigerator where it will not be exposed to temperatures below freezing or exposed to outdoor weather conditions.
- Install this appliance in an area where the temperature is between 55°F (13°C) and 110°F (43°C). If the temperature around the appliance is too low or too high, cooling ability may be adversely affected.
- If this refrigerator is installed where the temperature is above 110°F (43°C), the freezing capacity is compromised and the cost of electricity used increases.
- To reduce the risk of electric shock, do not install the refrigerator in a wet or damp area.
- Select a place where a water supply can be easily connected for the automatic icemaker and dispenser.
- Unstable installation may cause vibration and noise. If the floor is not even, make the refrigerator level by rotating the height adjusting screws.
- Properly ground the refrigerator to conform with all governing codes and ordinances.

⚠CAUTION

Avoid placing the unit near heat sources, direct sunlight, or moisture.

CLEARANCES

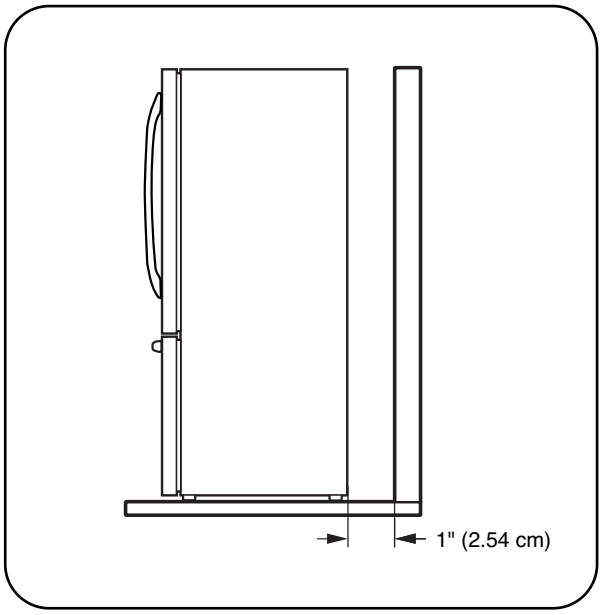

- Too small a distance from adjacent items may result in lowered freezing capability and increased electricity consumption charges. Allow at least 24 in. (61 cm) in front of the refrigerator to open the doors.

NOTE: For complete dimensions and specifications, see page 40.

FLOORING

- To minimize noise and vibration, the refrigerator MUST be installed on a solidly constructed floor.
- To avoid vibration, the unit must be level. If required, adjust the leveling legs to compensate for unevenness of the floor. The front should be slightly higher than the rear to aid in door closing. The leveling legs can be turned easily by pushing against the top of the refrigerator to take the weight off the feet. Turn the leveling legs clockwise to raise the unit or counterclockwise to lower it.
- Carpeting and soft tile surfaces are not recommended.
- Never install the refrigerator on a platform or weakly supported structure.

NOTE: When moving the refrigerator for cleaning or service, be sure to protect the floor. Always pull the refrigerator straight out when moving it.

Do not wiggle or walk the refrigerator when trying to move it; floor damage could occur.

NOTE: It is recommend that the doors be removed when it is necessary to move the refrigerator through a narrow opening.

HANDLE REMOVAL

To move the refrigerator through a house door, it may be necessary to remove the refrigerator door handles.

NOTE: Handle appearance may vary from illustrations on this page.

⚠CAUTION

- Use special care when removing handles to prevent scratching the doors.
- The handle could be damaged if you hit it with a hammer while removing or attaching.
- When you assemble or disassemble a handle, you must push or pull with reasonable force.

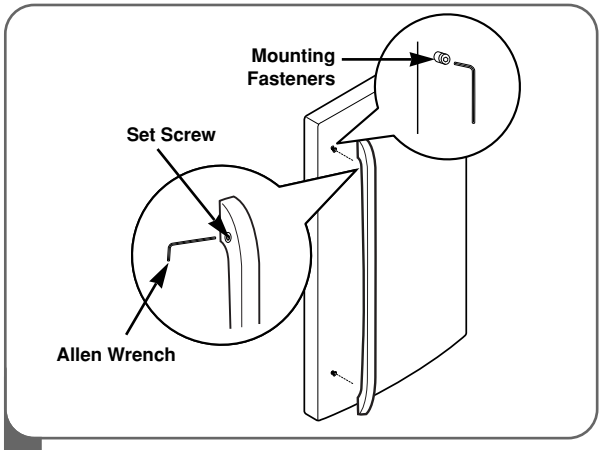

1 Loosen the set screws with a 2.5 mm (3/32") Allen wrench and remove the handle.

NOTE: If the handle mounting fasteners need to be tightened or removed, use a 1/4" Allen wrench.

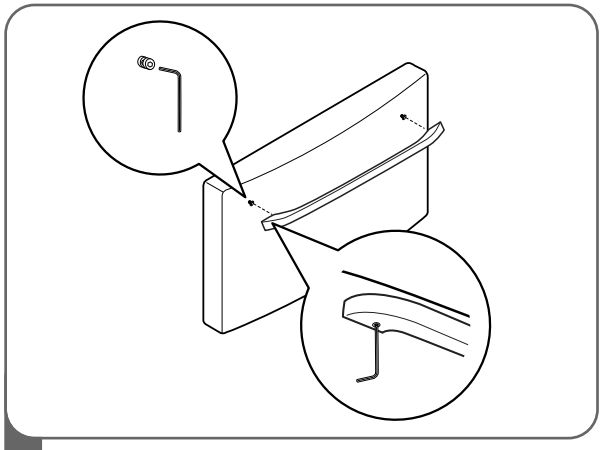

2 Loosen the set screws located on the lower side of the handle with a 2.5 mm (3/32") Allen wrench and remove the handle.

NOTE: If the handle mounting fasteners need to be tightened or removed, use a 1/4" Allen wrench.

HANDLE REMOVAL (CONT.)

HANDLE REINSTALLATION

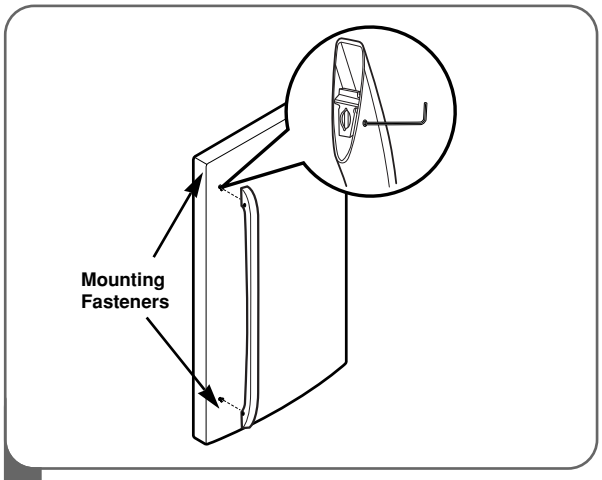

1 Place the handle on the door by aligning handle footprints to fit mounting fasteners and tighten the set screws with a 2.5 mm (3/32") Allen wrench.

NOTE: If the handle mounting fasteners need to be tightened or removed use a 1/4" Allen wrench

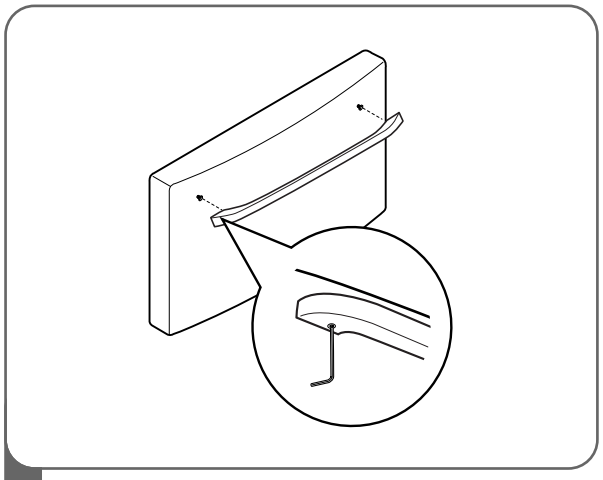

2 Place the handle on the door by aligning handle footprints to fit mounting fasteners and tighten the set screws on the bottom of the handle with a 2.5 mm (3/32") Allen wrench.

NOTE: If the handle mounting fasteners need to be tightened or removed use a 1/4" Allen wrench.

DOOR AND DRAWER REMOVAL

DOOR REMOVAL

⚠WARNING

Electric Shock Hazard

- Disconnect electrical supply to the refrigerator before installing. Failure to do so could result in death or serious injury.
- Do not put hands or feet or metal sticks into the air vents, base grille, or bottom of the refrigerator. You may be injured or receive an electrical shock.
- Be careful when you work with the hinge, base grille, and stopper. You may be injured.

Before you begin, remove food and bins from the doors.

If your entrance door is too narrow for the refrigerator to pass through, remove the refrigerator door and move the refrigerator sideways through the doorway.

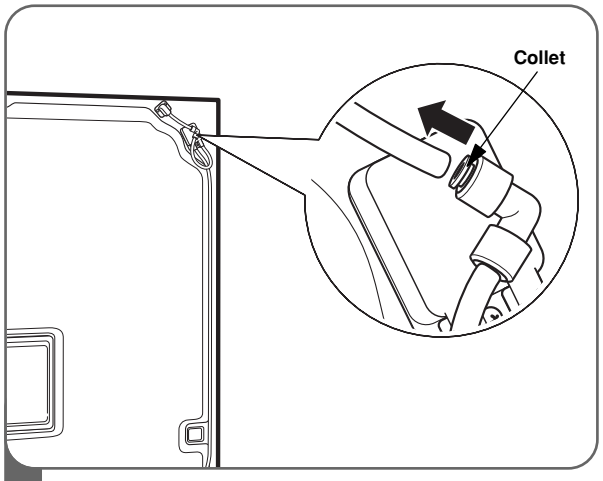

1 **To remove the left refrigerator door:**

Pull the water tube out of the fitting while pressing the release ring on the fitting.

NOTE : When you pull out the tube, first you have to push the collet by opposite direction of arrow in the upper picture and pull the tube out by direction of arrow.

DOOR AND DRAWER REMOVAL (CONT.)

DOOR REMOVAL (CONT.)

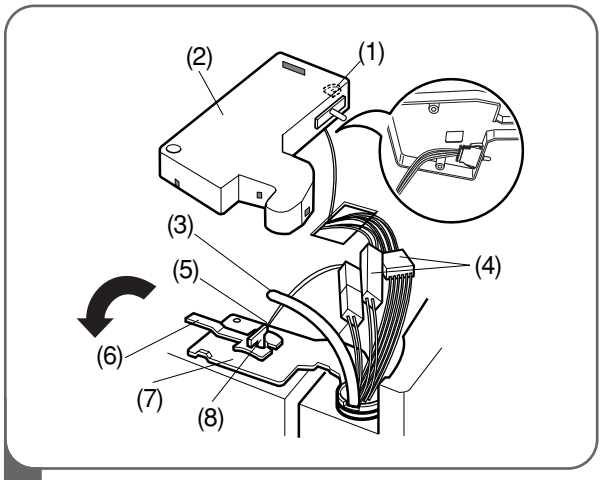

2
- Open the door. Remove the top hinge cover screw (1).
- Use a flat-head screwdriver to pry back the hooks (not shown) on the front underside of the cover (2). Lift up the cover.
- Remove the cover. Pull out the tube (3).
- Disconnect all the wire harnesses (4).
- Remove the grounding screw(5)
- Rotate hinge lever (6) counterclockwise and remove. Lift the top hinge (7) free of the hinge lever latch (8).

IMPORTANT: When lifting the hinge free of the latch, be careful that the door does not fall forward.

- Lift the door from the middle hinge pin and remove the door.
- Place the door, inside facing up, on a non-scratching surface.

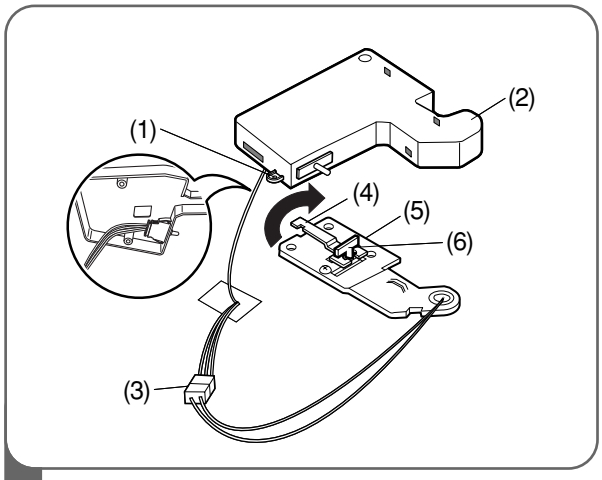

3 **To remove the right refrigerator door:**
- Open the door. Remove the top hinge cover screw (1). Lift up the cover (2).
- Remove the cover.
- Disconnect the wire harness (3).
- Rotate the hinge lever (4) clockwise and remove. Lift the top hinge (5) free of the hinge lever latch (6).

IMPORTANT: When lifting the hinge free of the latch, be careful that the door does not fall forward.

- Lift the door from the middle hinge pin and remove the door.
- Place the door, inside facing up, on a non-scratching surface.

⚠CAUTION: **Removing/Installing Refrigerator Doors**

If it is necessary to remove the refrigerator doors:

The doors must be opened about 90 degree when removing and reinstalling them on the lower hinge. Otherwise, the self-closing mechanisms may not work properly.

After reinstalling the doors, open and close them a minimum of 4~ 5 times to check the self- close function.

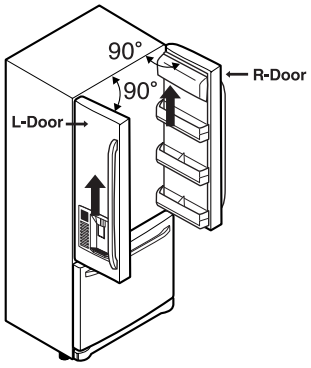

DOOR AND DRAWER REMOVAL (CONT.)

DOOR REINSTALLATION

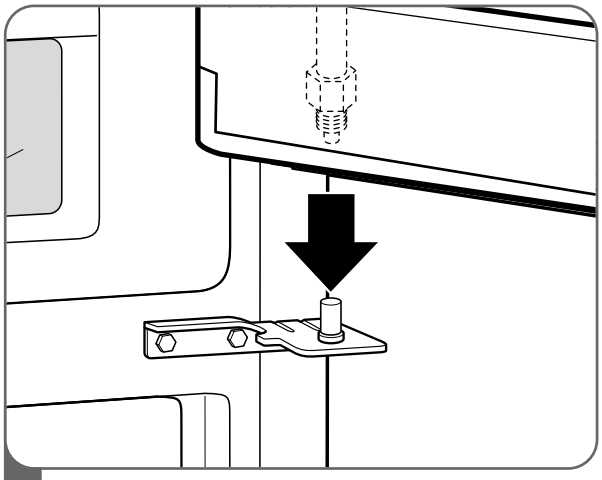

1 Install the right-side door first.

- Lower the door onto the middle hinge pin as shown.
- Make sure the plastic sleeve is inserted in the bottom of the door.

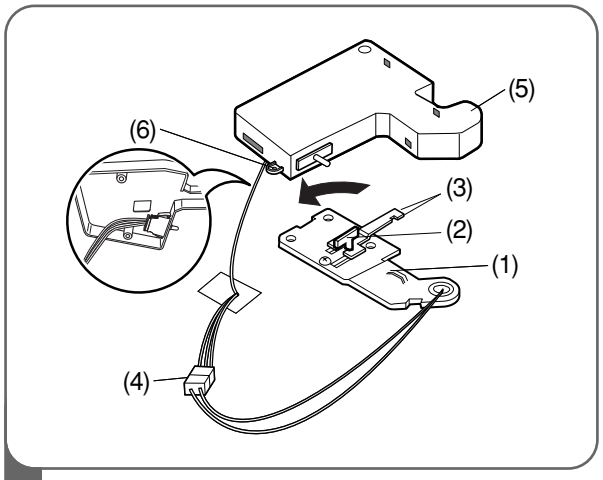

2
- Fit the top hinge (1) over the hinge lever latch (2) and into place. Insert the hinge lever (3) under the lever latch. Rotate the lever counterclockwise to secure the hinge.
- Connect the wire harness (4).
- Hook the tab on the door-switch side of the cover (5) under the edge of the wire opening in the cabinet top. Position the cover into place. Insert and tighten the cover screw (6).

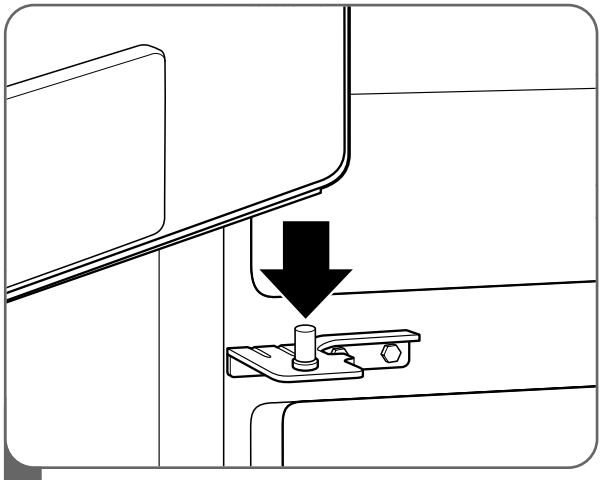

3 Install the left-side door.

- Lower the door onto middle hinge pin.

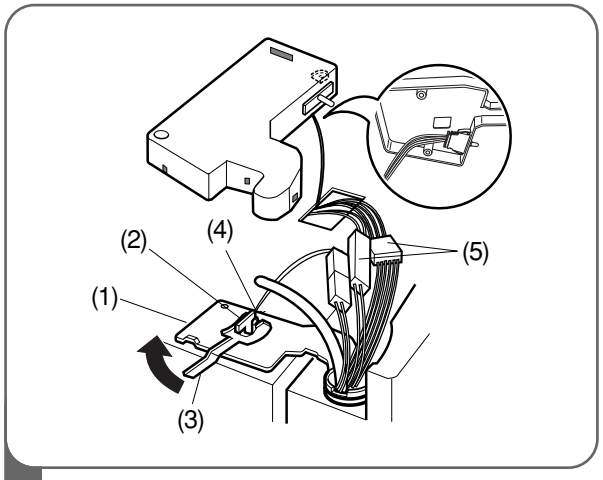

4
- Fit the top hinge (1) over the hinge lever latch (2) and into place. Insert the hinge lever (3) under the lever latch. Rotate the lever clockwise to secure the hinge.
- Install the grounding screw (4) and connect all the wire harnesses (5).

DOOR AND DRAWER REMOVAL (CONT.)

DOOR REINSTALLATION (CONT.)

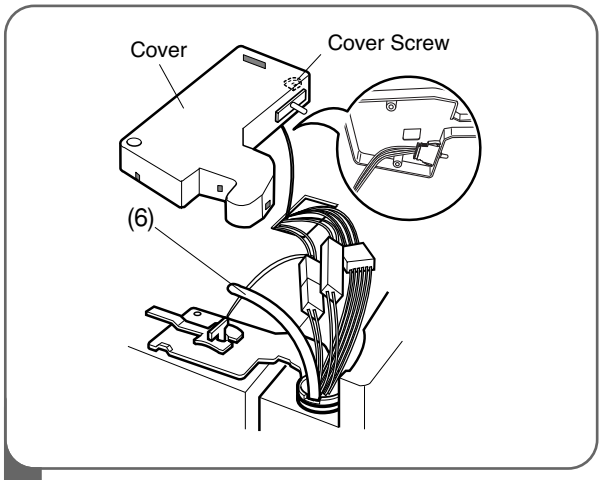

5 • Push the water supply tube (6) into the hole on the top case and pull it through the backplate.

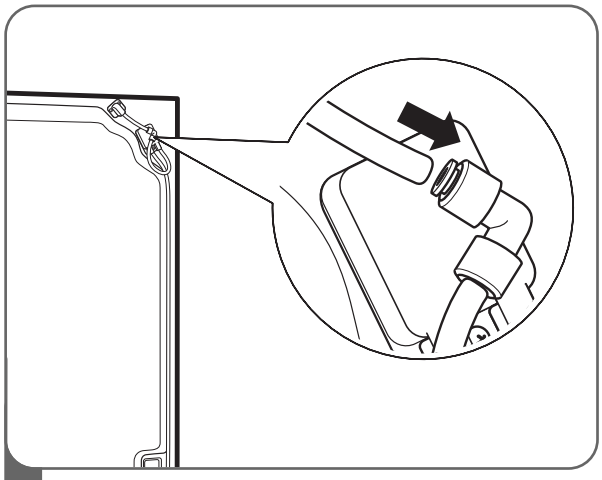

6 Insert the water supply tube into the connector.

- Insert the tube at least 5/8 in. (15 mm) into the connector.
- Hook the tab on the door-switch side of the cover under the edge of the wire opening in the cabinet top. Position the cover into place. Insert and tighten the cover screw.

⚠CAUTION

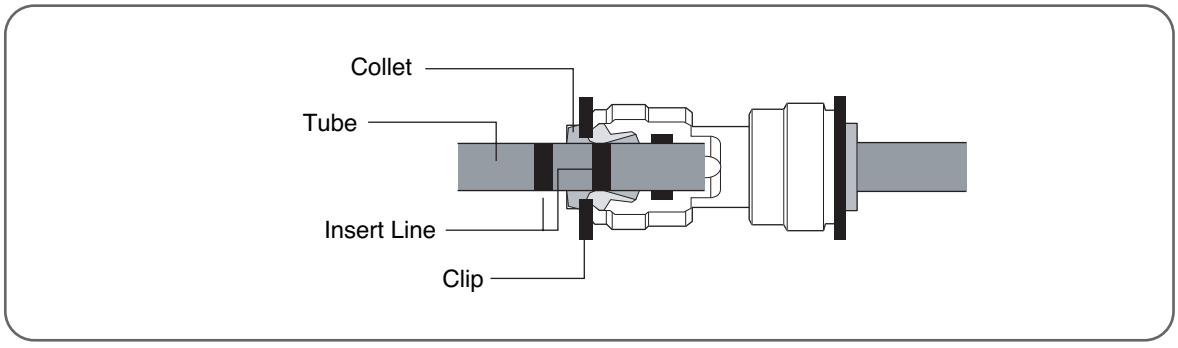

1. Insert the tube until you can see only one of the lines printed on the tube.
2. After inserting, pull the tube to ascertain that it is secure.
3. Assemble the clip.

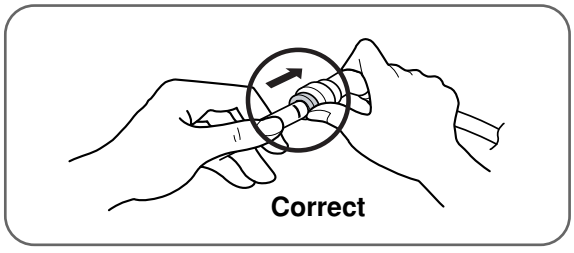

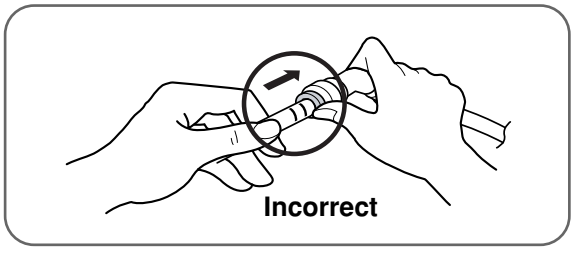

DOOR AND DRAWER REMOVAL (CONT.)

FREEZER DRAWER REMOVAL

⚠CAUTION

- To avoid possible injury or product or property damage, you will need two people to perform the following instructions.
- When you remove the drawer, do not hold the handle. It may come off and could cause injury.
- When laying the drawer down, be careful not to damage the floor or hurt your feet with the sharp edges on the hinge side.

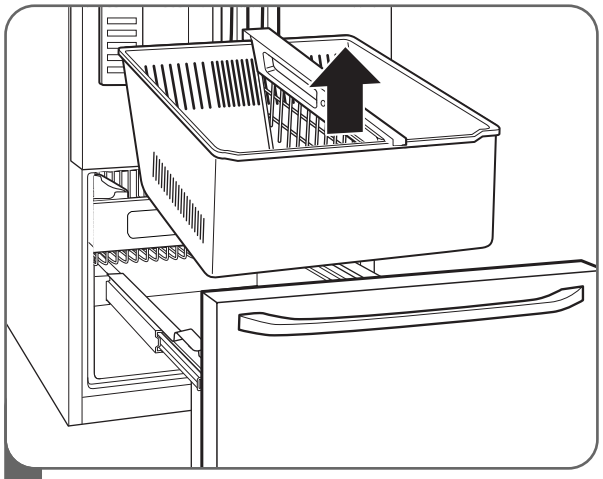

1 To remove the freezer drawer, pull the drawer open to full extension. Remove the lower DuraBase ® basket by lifting the basket from the rail system.

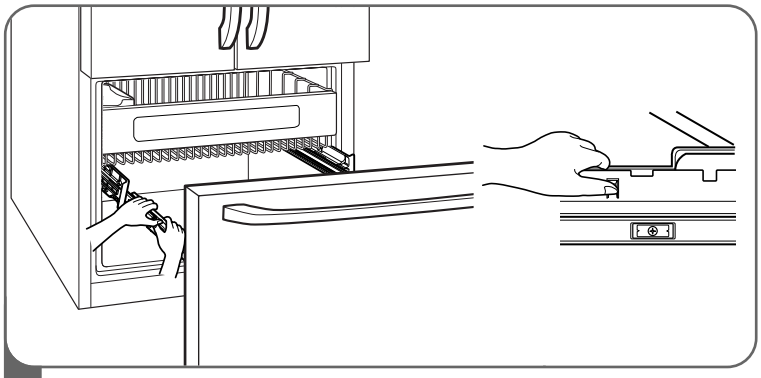

2 Separate the left and right rail cover.

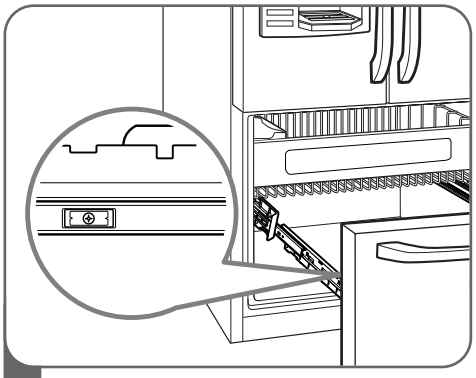

3 Remove the screws of the rail on both sides.

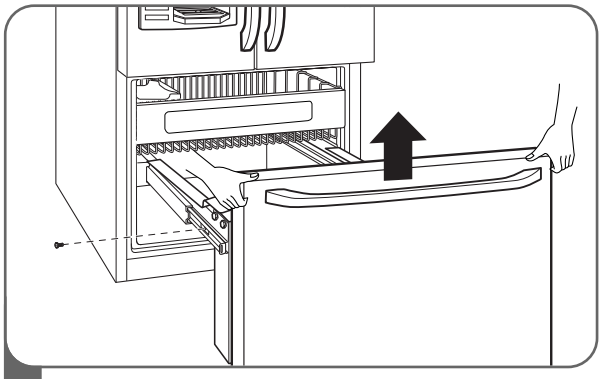

4 With both hands, hold both sides of the door and pull it up to separate it from the rails.

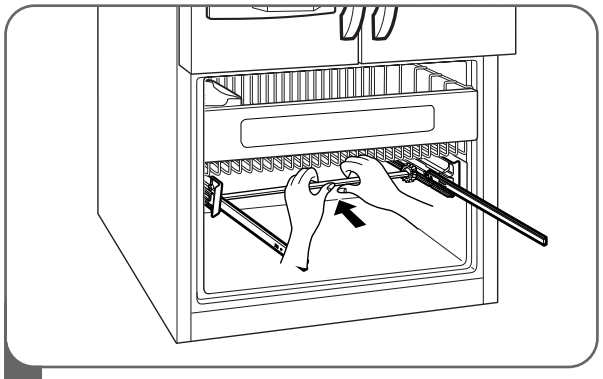

5 With both hands, flex the center bar enough to allow the gears on both ends to release from the track.

⚠CAUTION: When you remove the drawer, do not hold the handle. If it may come off and it could cause personal injury.

⚠CAUTION: When laying the drawer down, be careful not to damage the floor or hurt your feet by the sharp edges on hinge side.

DOOR AND DRAWER REMOVAL (CONT.)

FREEZER DRAWER REINSTALLATION

⚠CAUTION

- To avoid possible injury or product or property damage, you will need two people to perform the following instructions.

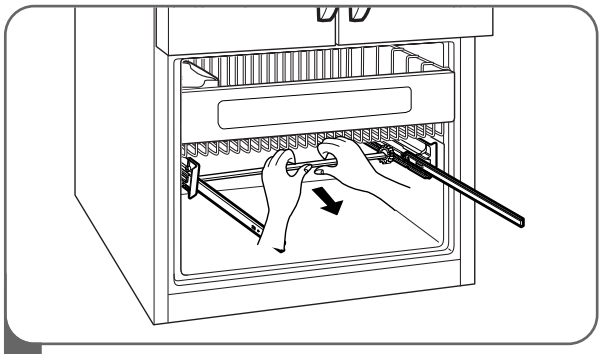

1 To reinstall the freezer drawer, hold the center bar with both hands and pull it out until both rails are fully extended.

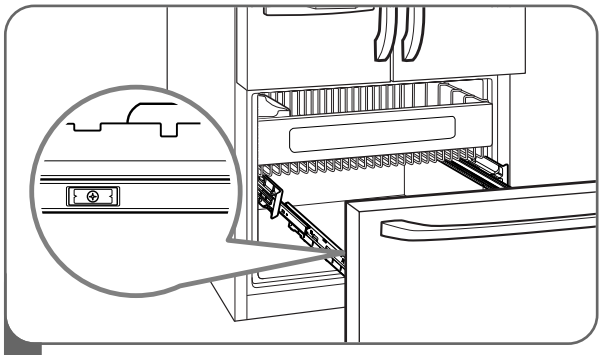

3 Lower door into final position and tighten the screws (3). Make sure you have a right rail cover for each side.

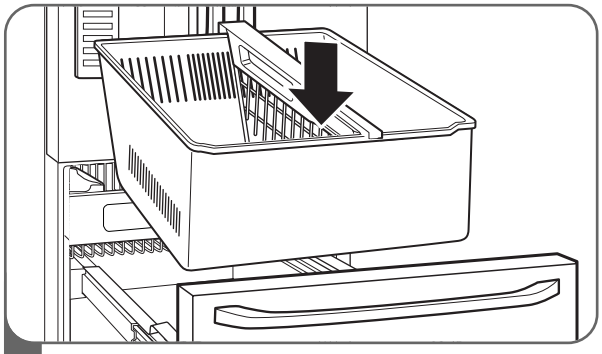

5 With the drawer pulled out to full extension, insert the lower basket in the rail assembly.

⚠DANGER

Risk of Child Entrapment

- To prevent accidental child and pet entrapment or suffocation risk, DO NOT allow them to play inside of the freezer drawer.
- DO NOT step or sit on the freezer drawer.

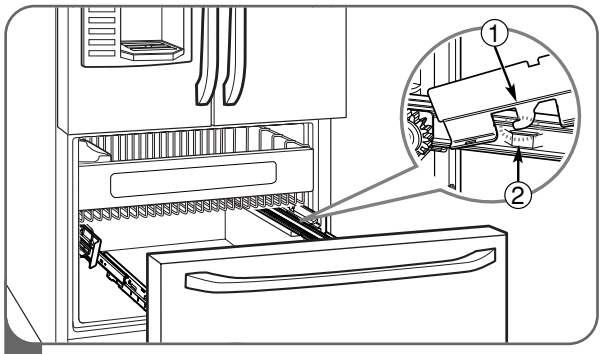

2 Hook door supports (1) into rail tabs (2).

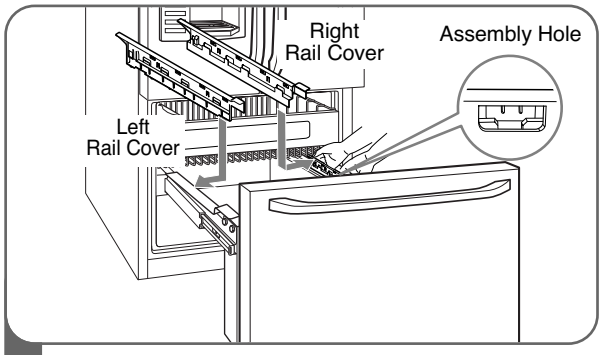

4 Align the top holes of the rail cover with the top holes of the door supports to assemble the rail covers.

⚠WARNING: To prevent accidental child and pet entrapment or suffocation risk. DO NOT allow them to play inside of drawer.

⚠WARNING: DO NOT step or sit down on freezer.

CONNECTING THE WATER SUPPLY

⚠WARNING

Connect to safe drinking water supply only.

- The water pressure must be between 21 and 121 p.s.i. (1.5~8.5 kgf/cm^2) on models without a water filter and between 43 and 121 p.s.i. (3~8.5 kgf/cm^2) on models with a water filter.
- If water pressure does not reach 21 psi (1.5kgf/cm^2) or falls below, it is necessary to purchase a separate pressure pump for normal automatic icemaker and water dispensing operation.
- It is recommended that the total length of the water feed tube does not exceed 26 ft. (8 m).
- Install the water supply line where it will not be affected by heat.

IMPORTANT: Read all directions thoroughly before you begin.

- If operating the refrigerator before installing the water connection, turn the icemaker to the OFF position to prevent operation without water.
- All installations must be in accordance with local plumbing code requirements.
- Use copper tubing and check for leaks.
- Install tubing only in areas where temperatures will remain above freezing.
- It may take up to 24 hours for the icemaker to begin producing ice.

Tools Required

- Standard screwdriver
- 7/16-in. and 1/2-in. open-end wrenches or two adjustable wrenches
- 1/4-in. nut driver
- 1/4-in. drill bit
- Hand drill or electric drill (properly grounded)

NOTE: Refrigerator dealers offer a kit with a 1/4-in. saddle-type shutoff valve, a union, and copper tubing. Before purchasing, make sure a saddle-type valve complies with local plumbing codes.

Do not use a piercing-type or 3/16-in. saddle valve which reduces water flow and clogs more easily.

NOTE: The Commonwealth of Massachusetts Plumbing Code 248CMR shall be adhered to.

Saddle valves are illegal and use is not permitted in Massachusetts. Consult with your licensed plumber.

Cold Water Supply

- The icemaker water valve contains a flow washer which is used as a water pressure regulator.
- The icemaker needs to be connected to a cold water line with water pressure between 21~121 psi (1.5~8.5 kgf/cm^2) on models without a water filter and between 43 and 121 p.s.i. (3~8.5kgf/cm^2) on models with a water filter.

CONNECTING THE WATER LINES

IMPORTANT: Before connecting the tubing to the water line, unplug the refrigerator or disconnect the power.

- Turn off the main water supply and open the nearest faucet to relieve pressure in the line. Opening an outside faucet may help drain water from the line in the house.
- Find a 1/2-in. vertical COLD water pipe near the refrigerator.

NOTE: A horizontal pipe will work, but the following precaution must be taken: drill on the top of the pipe, not the bottom. This will help keep water away from the drill and also keep normal sediment from collecting in the valve.

- To determine the length of copper tubing you will need, measure from the connection on the lower left rear of the refrigerator to the water pipe. Add 7 ft. (2.1 m) to allow for moving the refrigerator for cleaning. Use 1/4-in. O.D. (outside diameter) copper tubing. Be sure both ends of the copper tubing are cut square.
- Using a drill, drill a 1/4-in. hole in the cold water pipe you have selected.

CONNECTING THE WATER LINES (CONT.)

- Fasten the shutoff valve to the cold water pipe with the pipe clamp. Be sure the outlet end is solidly in the 1/4-in. drilled hole in the water pipe and the washer is under the pipe clamp. Tighten the packing nut. Tighten the pipe clamp screws carefully and evenly so the washer makes a watertight seal. Do not overtighten or you may crush the copper tubing, especially if soft (coiled) copper tubing is used. Now you are ready to connect the copper tubing.
- Slip the compression sleeve and the compression nut onto the copper tubing as shown. Insert the end of the tubing into the outlet end squarely as far as it will go. Screw the compression nut onto the outlet end with a wrench. A flare nut wrench works best, but an open-end wrench will suffice. Do not overtighten.
- Place the free end of the tubing into a container or sink, and turn on the main water supply. Flush out the tubing until the water is clear. Turn off the shutoff valve on the water pipe. Coil the copper tubing as shown below.

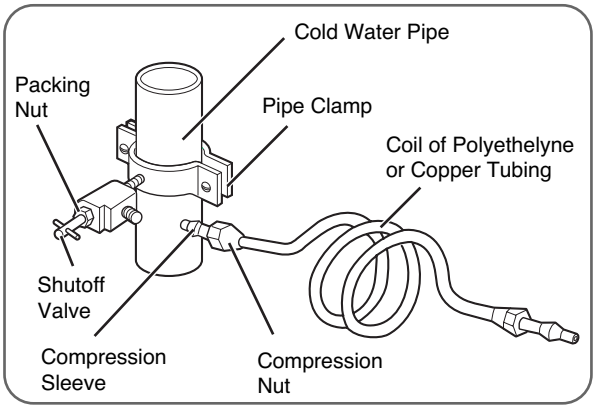

IMPORTANT: Before connecting the tubing to the refrigerator, be sure the refrigerator power cord is not plugged into the wall outlet.

NOTE: If your refrigerator is equipped with an internal water filter, an external in-line water filter should not be used.

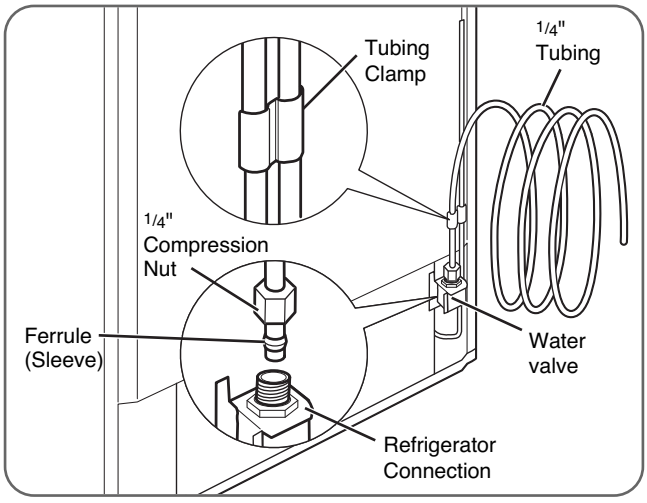

- Remove the plastic flexible cap from the water valve.
- Place the compression nut and ferrule (sleeve) onto the end of the tubing as shown.
- Insert the end of the copper tubing into the connection as far as possible. While holding the tubing, tighten the fitting.

IMPORTANT: Tighten any connections that leak. Open the water at the shutoff valve.

- Plug in the refrigerator.
- Arrange the coil of copper tubing behind the refrigerator so it does not vibrate against the back of the refrigerator or against the wall.
- Check for leaks.
- Before connecting the water line to house, purge house line for 2 minute.

NOTE: It may take a few seconds for water to begin to flow as the internal tank fills and air clears from the lines.

- Push the refrigerator back to the wall.
- Set the icemaker switch to the ON position.

NOTE: The icemaker will not begin to operate until it reaches its operating temperature of 15°F (-9°C). It will then begin operation automatically.

NOTE: Throw away the first few batches of ice (about 20 pieces).

LEVELING THE REFRIGERATOR DOORS

⚠WARNING

Electrical Shock Hazard

- Be careful when you work with the hinges, base grille, and stopper. You may be injured.
- Do not put hands, feet, or metal items into the air vents, base grille, or the bottom of the refrigerator. You may be injured or receive an electrical shock.

Leveling

After installing, secure the product with the LEG not to move left or right.

Your refrigerator has two front leveling legs—one on the right and one on the left. Adjust the legs to alter the tilt from front to back or side to side. If your refrigerator seems unsteady or you want the doors to close more easily, adjust the refrigerator's tilt using the following instructions:

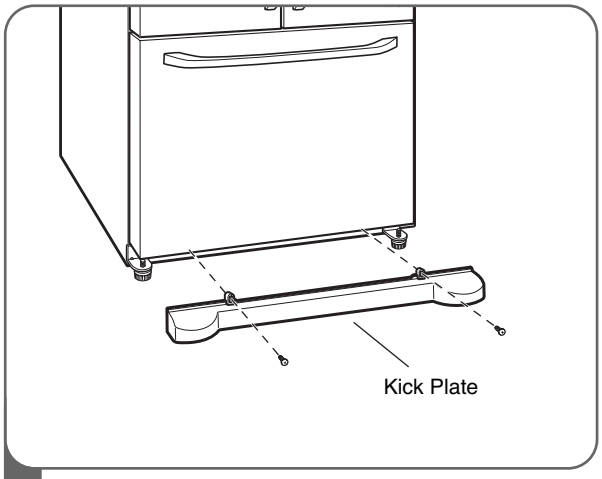

1 Plug the power cord into a 3-prong grounded outlet, and move the refrigerator into its final position. Remove the kick plate screws and then the kick plate.

- Open the Freezer Drawer.
- Once the drawer is open, there is sufficient clearance to remove the screws on top of the kick plate.

NOTE: To replace the kick plate, place it into position, and then insert and tighten the screws.

⚠CAUTION

- To avoid possible injury or product or property damage, you will need two people to perform the following instructions.

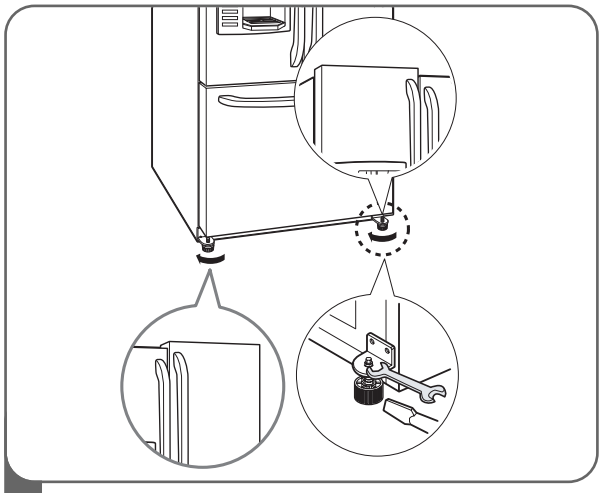

2 Level the refrigerator by using an 11/32 inch (8mm) wrench or a flat blade screw driver.

Turn the leveling legs (CCW) to raise or (CW) to lower the height of the front of the refrigerator.

NOTE: The front of the refrigerator should be slightly higher than the back.

NOTE: If someone pushes backward against the top of the refrigerator, weight is lifted off of the leveling legs, which makes adjustment easier.

Open both doors to make sure they close easily. If not, raise the leveling legs higher by turning both clockwise the same amount.

Once the refrigerator is level, replace the kick-plate.

NOTE: Your new refrigerator is uniquely designed with two fresh food doors. Either door can be independently opened or closed.

You will have to exert slight pressure on the doors to close them completely.

NOTE: In order not to move the refrigerator back and forth, fix it with the 'Adjust' to the floor to install and use.

LEVELING THE REFRIGERATOR DOORS (CONT.)

DOOR ALIGNMENT

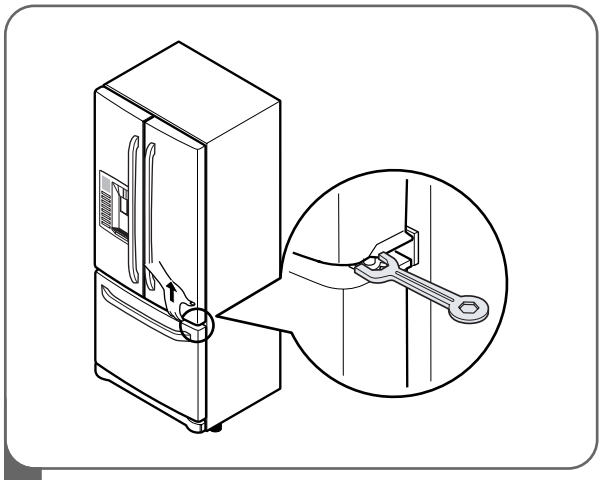

1 If fridge doors are still uneven.

- Use the wrench to adjust the bolt in the door hinge to adjust the height. (CCW to raise or CW to lower the height.)

STARTING

Before loading your refrigerator with fresh foods:

- Remove tape and any temporary labels from your refrigerator before using. To remove any remaining adhesive residue, rub the area briskly with your thumb, or rub a small amount of liquid dish soap over the adhesive with your fingers. Wipe with warm water and dry. Do not use sharp instruments, rubbing alcohol, flammable fluids, or abrasive cleaners to remove tape or glue.

NOTE: Do not remove any warning-type labels, the model and serial number label, or the tech sheet that is taped to the back of the refrigerator.

- Thoroughly clean your refrigerator and wipe off all dust that may have accumulated during shipping.
- Install accessories such as the ice cube bin, drawers, and shelves, in their proper places. They are packed together to prevent possible damage during shipment.
- Adjust the desired temperature for the refrigerator and freezer (see Adjusting the Temperature and Functions).
- Let your refrigerator run for at least 2 or 3 hours before putting food in it. Check the flow of cold air in the freezer compartment to ensure proper cooling. Your refrigerator is now ready for use.

CONTROL PANEL FEATURES

For complete details on button functions, see pages 22–24.

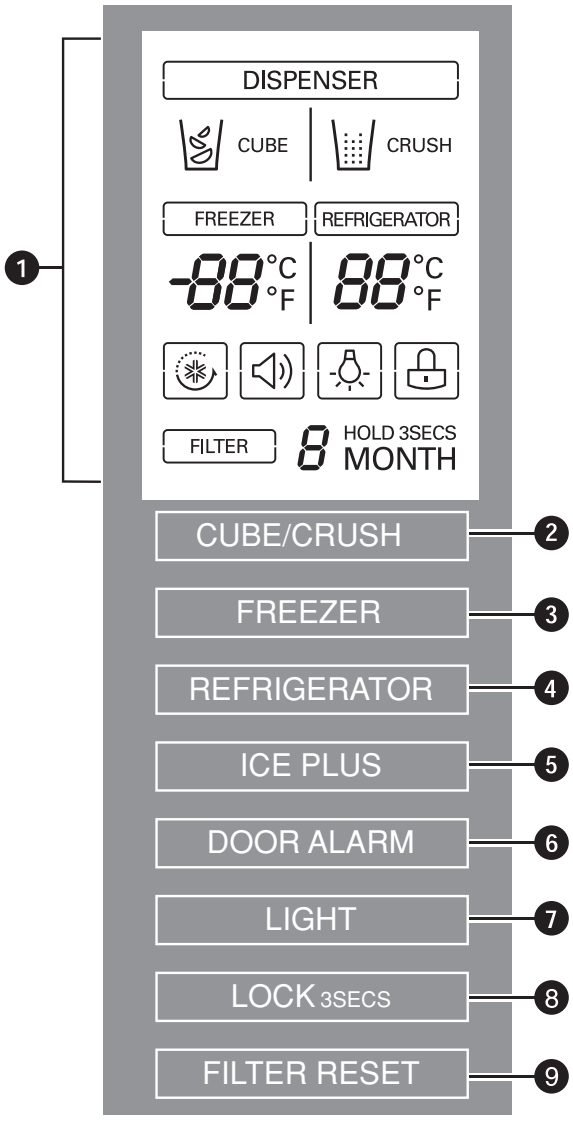

❶ LCD DISPLAY

The LCD display shows the temperature settings, dispenser options, water filter, door alarm, and locking status messages.

❷ CUBE/CRUSH BUTTON

The CUBE/CRUSH button is used to select Cubed Ice or Crushed Ice.

❸ FREEZER BUTTON

Press the FREEZER button to adjust the temperature in the freezer compartment.

NOTE: When pressed simultaneously with the REFRIGERATOR button for more than five seconds, the temperature display will change from Fahrenheit to Celsius or vice versa.

❹ REFRIGERATOR BUTTON

Press the REFRIGERATOR button to adjust the temperature in the refrigerator compartment.

NOTE: When pressed simultaneously with the FREEZER button for more than five seconds, the temperature display will change from Fahrenheit to Celsius or vice versa.

❺ ICE PLUS

Press this button to turn on the ICE PLUS. feature, which increases icemaking capabilities up to about 20 percent.

❻ DOOR ALARM BUTTON

Press this button to control the door-open alarm.

❼ LIGHT BUTTON

The LIGHT button controls the lamp in the dispenser.

❽ LOCK BUTTON

Press this button to lock or unlock all the other function buttons on the control panel, including operation of the dispenser.

❾ FILTER RESET BUTTON

The FILTER RESET button resets the water filter replacement indicator when the water filter has been replaced.

THE LCD DISPLAY

The LCD display shows the temperature settings, dispenser options, water filter, door alarm, and locking status messages.

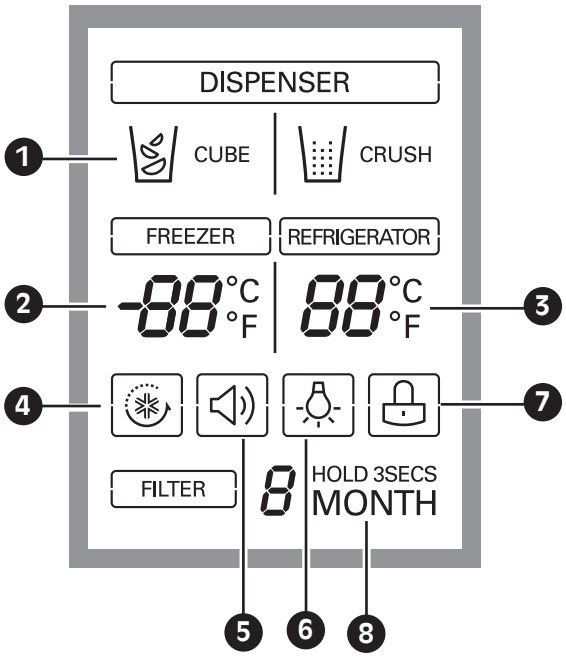

❶ DISPENSER SELECTION INDICATOR

Shows Cubed ice or Crushed Ice selection that will be dispensed when the push switch is pressed.

❷ FREEZER TEMPERATURE

Indicates the set temperature of the freezer compartment in Celsius or Fahrenheit.

❸ REFRIGERATOR TEMPERATURE

Indicates the set temperature of the refrigerator compartment in Celsius or Fahrenheit.

❹ ICE PLUS

When the ICE PLUS button is pressed, the display will indicate the selected function has been activated.

❺ DOOR ALARM INDICATOR

This indicator shows that the door-open warning alarm is activated.

❻ DISPENSER LIGHT INDICATOR

When the LIGHT button is pressed, the display will indicate the selected function: The dispenser light is on, this indicator will appear on the display panel.

❼ LOCK STATUS

This indicator shows the current status for the control panel functions is set to LOCK.

❽ WATER FILTER STATUS

This indicator shows the current status for the water filter. See Resetting the Filter Indicator.

ADJUSTING THE TEMPERATURES AND DISPLAY

Adjust Freezer Temperature

To adjust the temperature in the freezer compartment, press the FREEZER button to cycle through the the range of available settings.

Adjust Refrigerator Temperature

To adjust the temperature in the refrigerator compartment, press the REFRIGERATOR button to cycle through the range of available settings.

NOTE: The actual inner temperature varies depending on the food status, since the indicated temperature setting is the target temperature and not the actual temperature within the refrigerator.

Initially set the REFRIGERATOR CONTROL at 37°F (3°C). Leave it at this setting for 24 hours (one day) to stabilize. Then adjust the compartment temperature as illustrated above.

Temperature Display

To change the temperature display from Fahrenheit to Celsius:

- Simultaneously press and hold the FREEZER and REFRIGERATOR buttons for more than 5 seconds.
- Do the same to convert back to Fahrenheit.

OPERATING THE DISPENSER

DISPENSING CRUSHED ICE

CUBE/CRUSH

Press the CUBE/CRUSH button to illuminate the Crushed Ice icon.

Press the push ice switch with a glass or other container and crushed ice will be dispensed.

DISPENSING CUBED ICE

CUBE/CRUSH

Press the CUBE/CRUSH button to illuminate the Cubed Ice icon.

Press the push switch with a glass or other container and cubed ice will be dispensed.

NOTE: Hold the glass or other container in place for a couple of seconds after dispensing ice or water to catch the last few cubes or drops. The dispenser is designed to not operate while either refrigerator door is open.

DISPENSING WATER

Press the push water switch or active water button with a glass or other container and chilled water will be dispensed.

When the water switch or active water switch is pressed, the light will be illuminated.

CONTROLLING THE DISPENSER LIGHT

LIGHT

Press the LIGHT button to turn the dispenser light on and off.

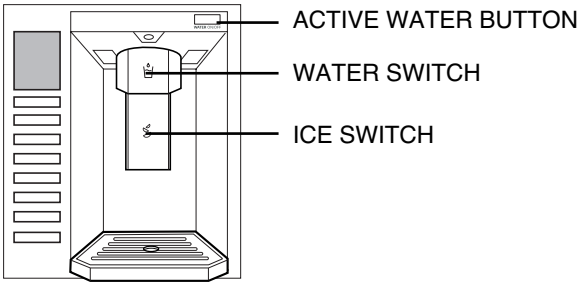

⚠CAUTION

When filling the container with a small opening, use it near the opening of the water or ice dispenser as close as possible.

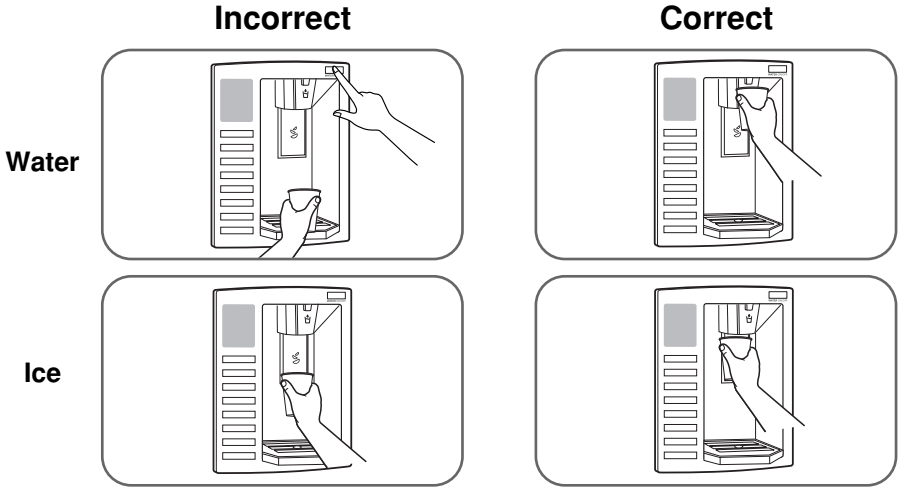

SETTING THE FUNCTIONS

Press the button for the desired function to view and select other settings.

SETTING THE DISPENSER LOCK

LOCK 3SECS

Press and hold the LOCK button for three seconds to lock the dispenser and all of the other control panel functions. Press and hold again for 3 seconds to unlock.

SETTING THE DOOR ALARM

DOOR ALARM

The DOOR ALARM button also controls the door alarm that sounds three times in 30-second intervals when a compartment door is left open for more than 60 seconds. The alarm stops sounding when the door is closed.

Press the DOOR ALARM button once to activate and deactivate the door alarm function.

NOTE: Contact your local service center if the alarm continues to sound after the doors are closed.

RESETTING THE FILTER INDICATOR

FILTER RESET

6 HOLD 3SECS MONTH

Press and hold the FILTER RESET button for more than 3 seconds to reset the filter indicator after the water filter has been replaced.

NOTE: It is recommended that you replace the filter when the water filter indicator light reaches 0 or whenever the water or ice cube taste deteriorates noticeably.

ACTIVATING ICE PLUS

ICE PLUS

Press the ICE PULS button once to activate the Ice Plus function. The ICE PULS icon on the display panel will illuminate when activated.

The Ice Plus function runs the freezer compartment at the coldest setting for a 24-hour period to increase icemaking by up to about 20%, and then turns off automatically.

NOTE: Press the button again to cancel the Ice Plus function.

DIAGNOSTIC FAILURE DETECTION

The diagnostic function automatically detects problems with your refrigerator, and a diagnostic code will appear in the display. **NOTE:** If a diagnostic code appears in the display during use, note the code and then call **1-800-243-0000** (24 hours per day/7 days per week) and select the option to locate an authorized servicer.

IN-DOOR ICE BANK

⚠CAUTION

- Keep hands and tools out of the ice bank door and dispenser chute. You could break something or injure yourself.

The icemaker will stop producing ice when the ice bank is full. If you need more ice, empty the ice bank into the extra ice bin in the freezer compartment so the icemaker can keep producing ice.

Shake the ice bank occasionally to level the ice in it. Sometimes the ice piles up near the icemaker, causing the icemaker to misread the amount of ice cubes and stop producing ice.

NOTE: Storing cans or other items in the ice bank may damage the icemaker.

Keep the ice bank door closed tightly. If the ice bank door is not closed tightly, the cold air in the ice bank will freeze food in the refrigerator compartment. This could also cause the icemaker to not produce ice.

NOTE: If the On/Off switch on the icemaker is set to Off for an extended time, the ice compartment will gradually warm up to the temperature of the refrigerator compartment. To prevent ice cubes from melting and leaking from the dispenser, ALWAYS empty the ice bin when the icemaker is set to Off for more than a few.

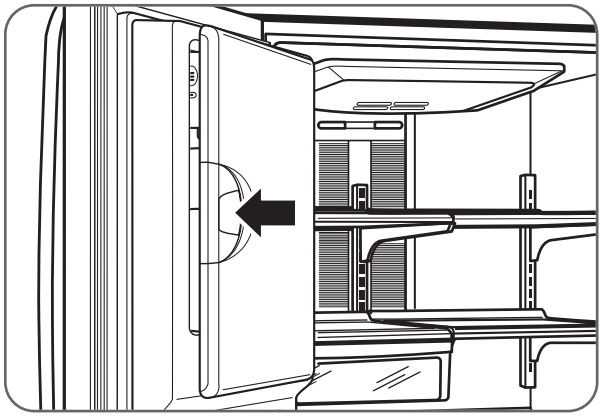

Push on the latch firmly where noted to close the ice bank door; it will make a clicking sound when it is closed completely.

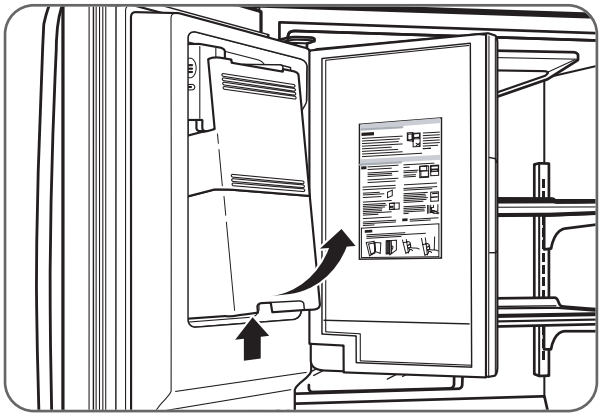

To remove the in-door ice bank, grip the front handle, slightly lift the lower part, and slowly pull out the bin as shown.

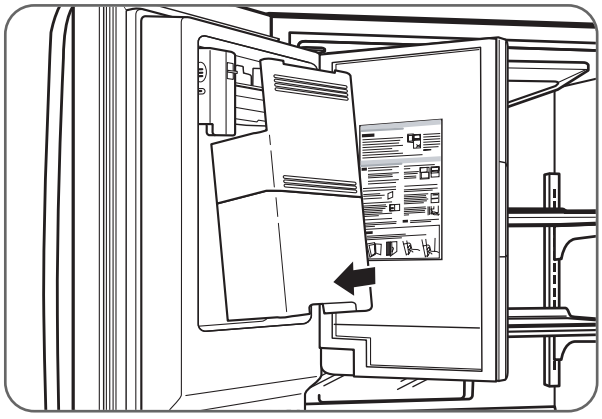

To reinstall the in-door ice bank, slightly slant the bin during replacement to avoid contact with the icemaker.

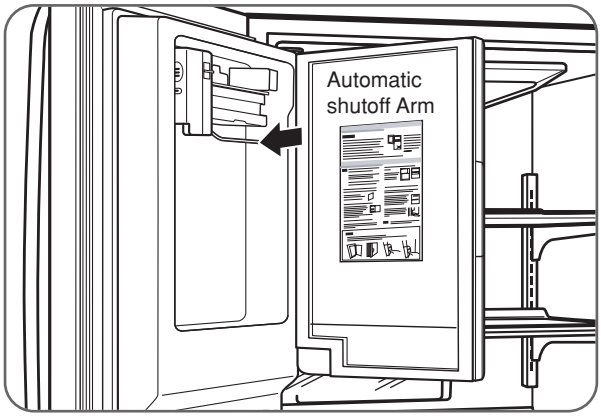

Avoid touching the automatic shutoff arm when replacing the ice bank. See the label on the ice bank door for details.

AUTOMATIC ICEMAKER

Ice is made in the automatic icemaker and sent to the dispenser. The automatic icemaker can make 6 ice cubes at a time, 80–130 cubes per 24-hour period. This quantity may vary by circumstance, including freezer compartment temperature, room temperature, number of door openings, freezer load, and other operating conditions.

- It takes about 12 to 24 hours for a newly installed refrigerator to make ice.
- Icemaking stops when the ice storage bin is full.
- To turn off the automatic icemaker, set the icemaker switch to OFF (O). To turn on the automatic icemaker, set the switch to ON (I).
- The cube size will vary depending on the Water Amount Selection Setting, as well as the water pressure of the connected water line.
- You can regulate the cube size by pressing the Water Amount Selection Button.

NOTE: It is normal that a noise is produced when ice drops into the ice storage bin.

- Even when the water pipe is not connected and the Ice Maker is turned on, the water valve operates. The noise is generated because the water pipe is not connected, which does not mean the icemaker is defective.

⚠WARNING

Personal Injury Hazard

- Avoid contact with the moving parts of the ejector mechanism or with the heating element that releases the cubes.
- DO NOT place fingers or hands on the automatic icemaking mechanism while the refrigerator is plugged in.

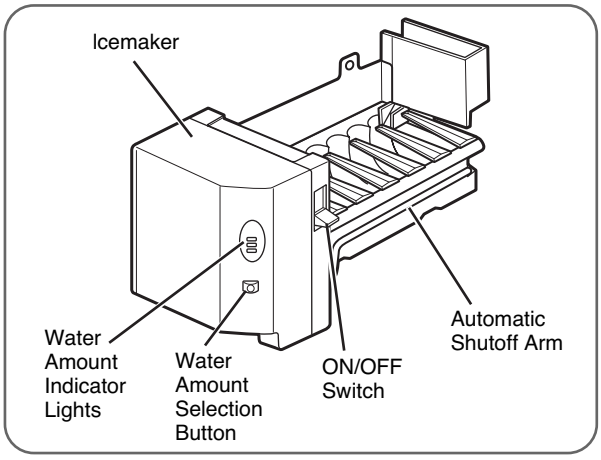

NOTE: Raising the automatic shutoff arm does not turn off the icemaker.

⚠CAUTION

- The first ice and water may include particles or odor from the water supply line or the water tank.
- Throw away the first few batches of ice (about 20 pieces) and purge the water line for 2 minutes after installation to eliminate air and odd tastes.
- This is also necessary if the refrigerator has not been used for a long time.
- Never store beverage cans or other foods in the ice bin for the purpose of rapid cooling. Doing so may damage the icemaker or the containers may burst.
- If discolored ice is dispensed, check the water filter and water supply. If the problem continues, contact an Authorized Service Center. Do not use the ice or water until the problem is corrected.
- Keep children away from the dispenser. Do not allow children to play in or around dispenser.
- The ice passage may also become blocked with frost if only crushed ice is used. Remove the frost that accumulates.
- Never use thin crystal glass or crockery to collect ice. Such glasses or containers may break, and glass fragments could be in the ice.
- Dispense ice into a glass before filling it with water or other beverages. Splashing may occur if ice is dispensed into a glass that already contains liquid.
- Never use a glass that is exceptionally narrow or deep. Ice may jam in the ice passage and refrigerator performance may be affected.
- Keep the glass at a proper distance from the ice outlet. A glass held too close to the outlet may prevent ice from dispensing.
- To avoid personal injury, keep hands out of the ice door and passage.
- Never remove the icemaker cover.
- If you find ice or water dispensed unexpectedly, turn off the water supply and contact an Authorized Service Center. Call **1-800-243-0000** (24 hours a day, 365 days a year) and select the option to locate an authorized servicer.

OPTIBIN ™ CRISPER HUMIDITY CONTROL

With easy-to-control humidity inside the crisper bins, the Optibin Crispers ensure fresher-tasting fruit and vegetables.

The Optibin Crispers include a humidity control knob at the front of the crisper cover.

You can control the amount of humidity in the moisture-sealed crispers. Store vegetables or fruits requiring more or less humidity in separate crispers. Adjust the control to any setting between the High and Low letter.

A lower humidity setting lets moist air out of the crisper for the best storage of fruits.

A higher humidity setting keeps moist air in the crisper for the best storage of fresh, leafy vegetables.

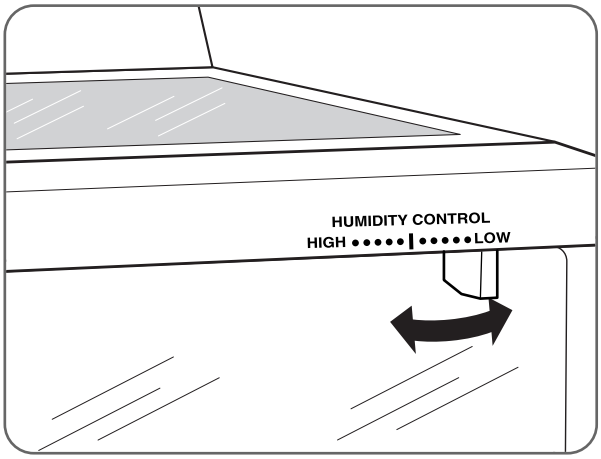

STORING FOODS

- Store fresh food in the refrigerator compartment.
- How food is frozen and thawed is an important factor in maintaining freshness and flavor.
- Do not store food that spoils easily, such as bananas and melons, at low temperatures.
- Allow hot food to cool prior to storing; placing hot food in the refrigerator could spoil other food and lead to higher energy consumption.
- When storing food, cover it with vinyl wrap or store in a container with a lid. This prevents moisture from evaporating and helps food to keep its flavor and nutrition.
- Do not block air vents with food or containers. Smooth circulation of chilled air keeps the refrigerator temperatures even.
- Do not open the doors frequently. Opening the doors allows warm air to enter the refrigerator and freezer compartments, which causes temperatures to rise.
- Never overload the door racks; overloading may push against the inner racks and prevent the doors from closing correctly.

Freezer compartment

- Do not store glass bottles in the freezer compartment; glass may break when the contents are frozen.
- Do not refreeze food that has been thawed. This causes loss of flavor and nutrition.
- Do not touch cold foods or containers, especially those made of metal, with wet hands or place glass products in the freezer compartment.
- Do not use the egg box as an ice bin in the freezer. The egg box will break easily if it freezes.

Refrigerator compartment

- Avoid placing moist food on the top refrigerator shelves; it could freeze from direct contact with chilled air.
- Always clean food prior to refrigeration. Vegetables and fruits should be washed and wiped and packed food should be wiped to prevent adjacent food from spoiling.

NOTE: If you keep the refrigerator in a hot and humid place, frequent opening of the door or storing a lot of vegetables in the refrigerator may cause condensation to form. Wipe the condensation with a clean cloth or a paper towel.

LOCATION OF FOODS

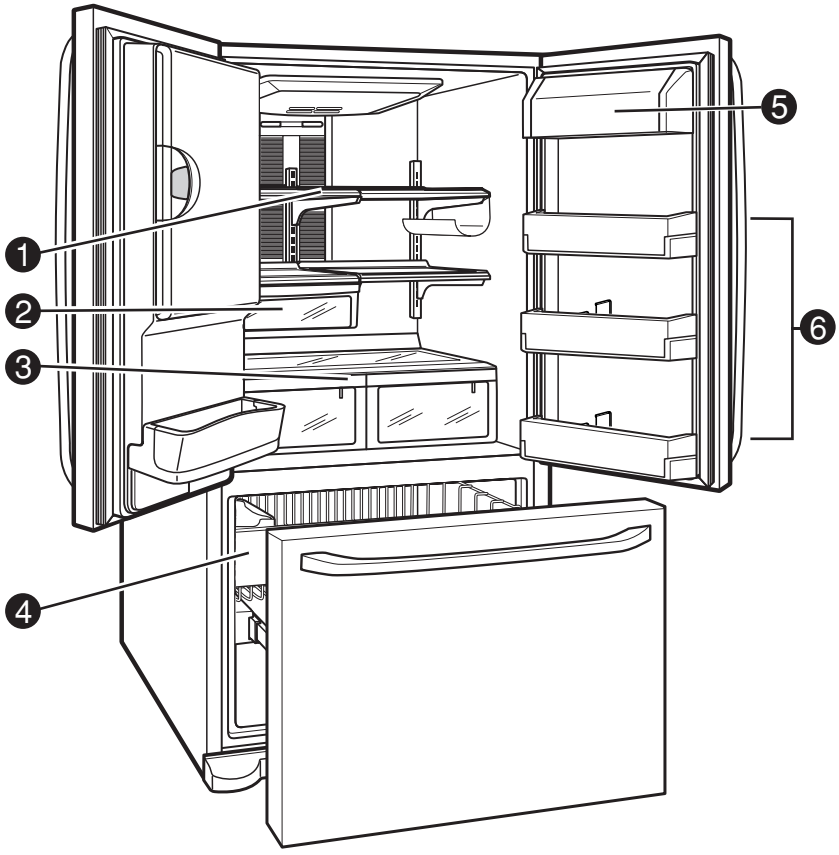

1 REFRIGERATOR COMPARTMENT SHELVES

Store larger food items, platters, and containers on the expansive refrigerator compartment shelves.

2 SNACK PAN

Store small food items such as bread and snack foods.

3 CRISPERS

Store vegetables or fruits with humidity control.

4 FREEZER PULL-OUT DRAWER

Store small packed frozen food, or store meat, fish, and chicken after wrapping them with thin foil. Store dry.

5 DAIRY CORNER

Store milk products such as butter and cheese.

6 MODULAR REFRIGERATOR DOOR BINS

Store small packed food or beverages such as condiments, salad dressings, baby foods, milk, or juice.

SHELF HEIGHT ADJUSTMENT

The shelves in your refrigerator are adjustable to meet your individual storage needs.

Storing similar food items together in your refrigerator and adjusting the shelves to fit different heights of items will make finding the exact item you want easier; it will also reduce the amount of time the refrigerator door is open, saving energy.

IMPORTANT: Do not clean glass shelves with warm water when they are cold. Shelves may break if exposed to sudden temperature changes or impact, such as bumping. For your protection, glass shelves are made with tempered glass, which will shatter into small, pebble-sized pieces.

NOTE: Glass shelves are heavy. Use special care when removing them to avoid dropping them.

Adjusting Shelves

Remove shelves from the shipping position and place shelves in the position you want.

⚠CAUTION

Make sure that shelves are level from one side to the other. Failure to do so may result in the shelf's falling or spilling food.

Remove Shelf

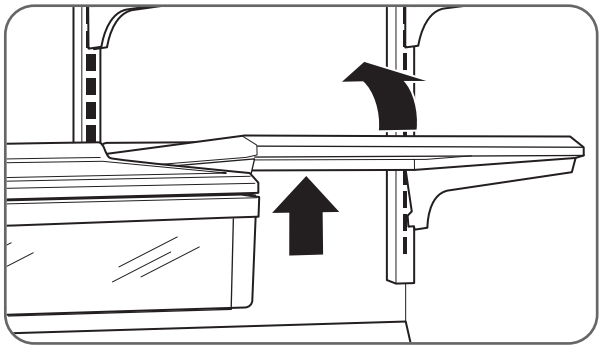

Tilt up the front of the shelf. Lift up the back and pull out the shelf.

Reinstall Shelf

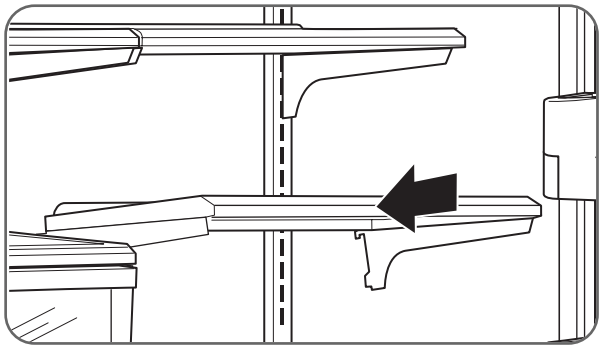

Tilt up the front of the shelf and guide the shelf hooks into the slots at a desired height.
Then lower the front of the shelf so that the hooks drop into the slots.

REMOVING AND REPLACING COMPONENTS

NOTE: When reinstalling components, reverse the order of steps for removal. To prevent damage, never use excessive force when removing or reinstalling components.

⚠CAUTION

- Personal injury can occur if the door bins are not firmly assembled.
  NOTE: DO NOT adjust a loaded bin.
- DO NOT allow children to play with baskets. The sharp corners on the baskets could cause injury.

Dairy Bin

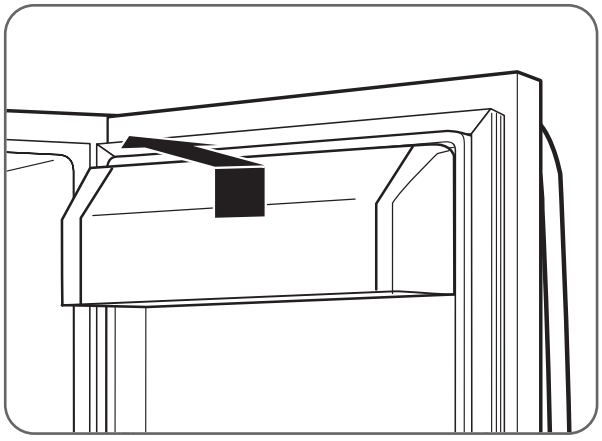

To remove the dairy bin, simply lift it and pull straight out. To replace the dairy bin, slide it into place and push down until it stops.

NOTE: The dairy bin will only fit in the top space on the right-hand door.

Modular Door Bin

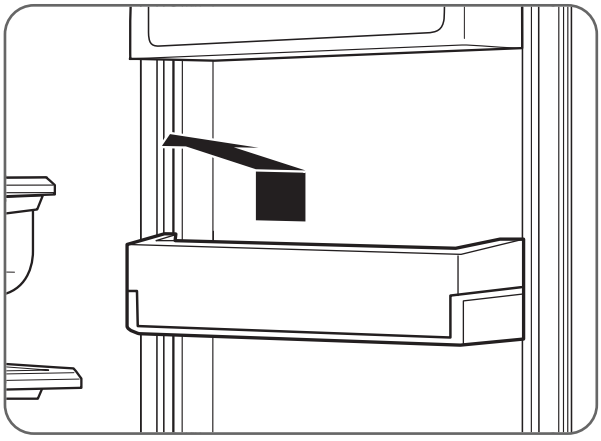

The door bins are removable for easy cleaning and adjusting. Simply lift the bin and pull it straight out to remove it. To replace the bin, slide it in above the desired support button and push down until it stops.

Dispenser Drip Tray

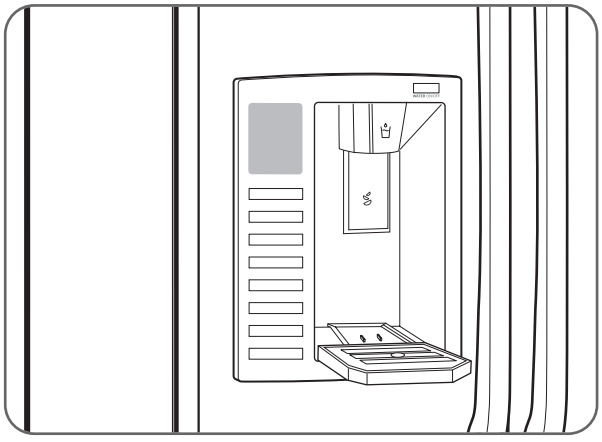

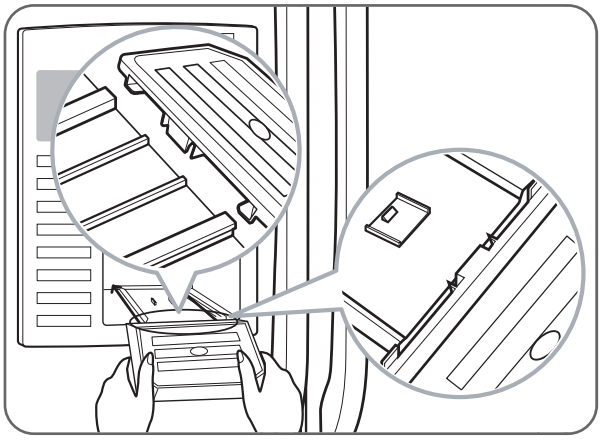

The dispenser drip tray has no self-draining function. It should be cleaned regularly. Remove the cover by pressing and pulling the tray. Dry it with a cloth. To reinstall the tray, slightly tilt the front of the tray and snap the ribs into the holes.

REMOVING AND REPLACING COMPONENTS (CONT.)

Removing the OptiBin ™ Crispers

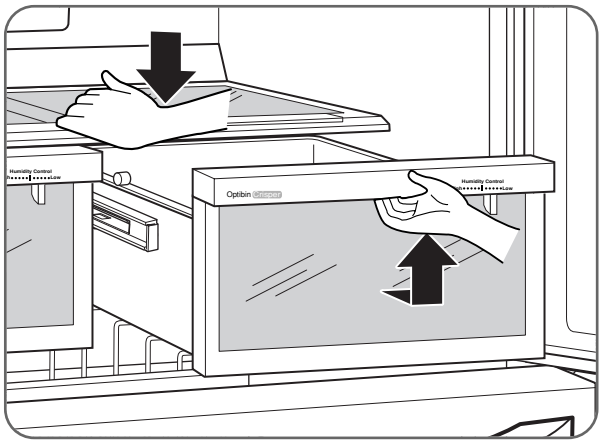

To remove the OptiBin ™ crisper bins, hold the crisper cover down, pull the crisper bin out to full extension. Lift up the bin by the front and pull it straight out to remove it.

Removing the OptiBin ™ Crispers (Cont.)

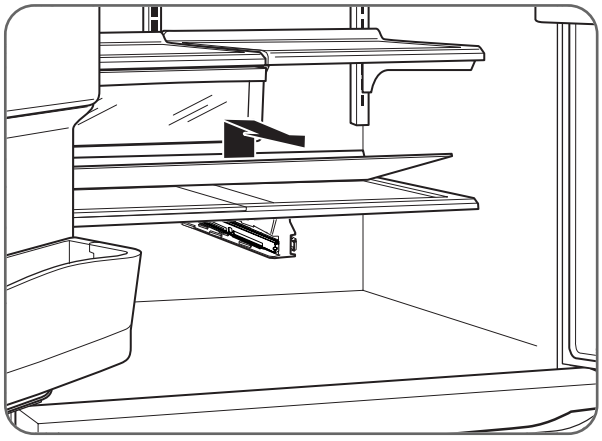

To remove the glass in the crisper cover, reach under the crisper cover, and lift the glass. Pull the glass up and out to remove it.

Bottle Holder

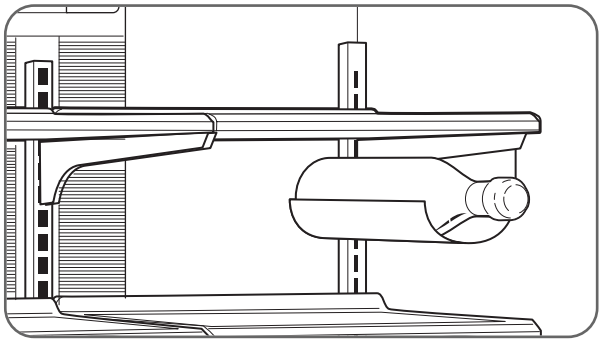

The bottle holder stores bottles in a horizontal position. It attaches to any shelf.

Reinstalling the OptiBin ™ Crispers

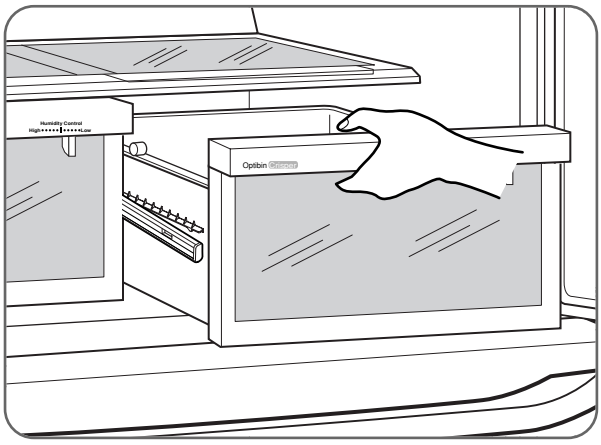

To reinstall the OptiBin ™ crispers, match the bin side guides with the rails in the crisper cover, draw the bin completely in, ensuring the hooks in the bin engage into the rail slots.

Bottle Holder (Cont.)

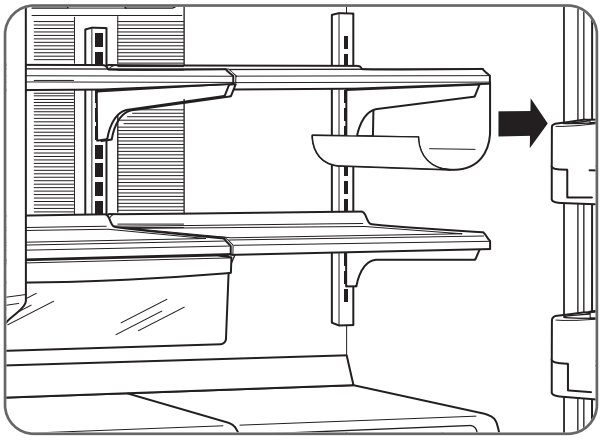

To remove the bottle holder, pull it straight out and off of the shelf. To install the bottle holder, place it at the end of the desired shelf and push it straight back into place.

REMOVING AND REPLACING COMPONENTS (CONT.)

⚠CAUTION

- Pinch hazard! Keep hands and feet clear of the bottom of the door when opening and closing.

Tilt-Out Freezer Door

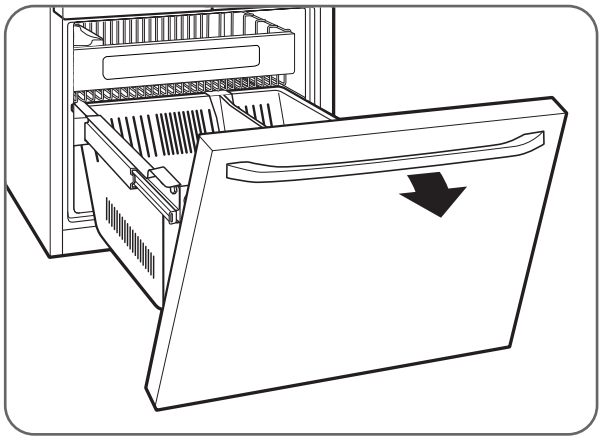

To access the freezer section, tilt the door downward and pull it out to full extension.

Ice Bin

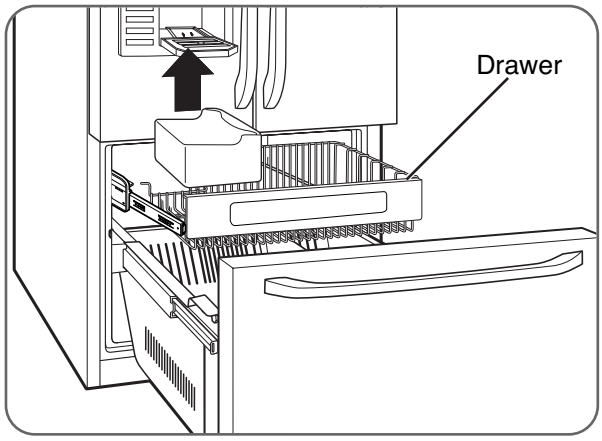

To separate the ice bin, pull out the drawer to full extension. Gently lift and pull out the ice bin. To reinstall, simply set the ice bin in its correct position.

Tilt-Out Door Basket

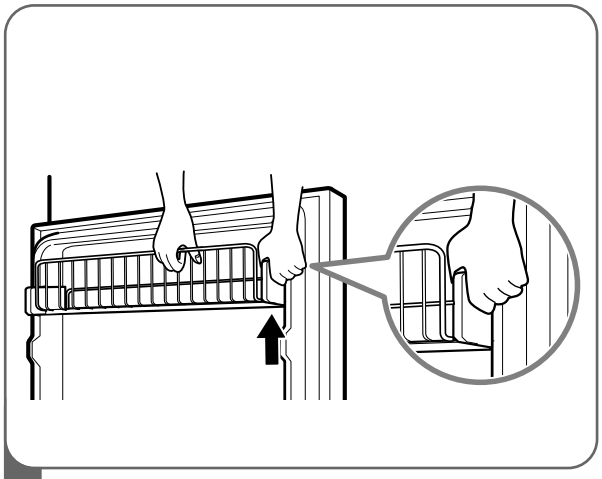

1 To remove the tilt-out door basket, press in on the end bracket, then pull up on the end of the basket to remove.

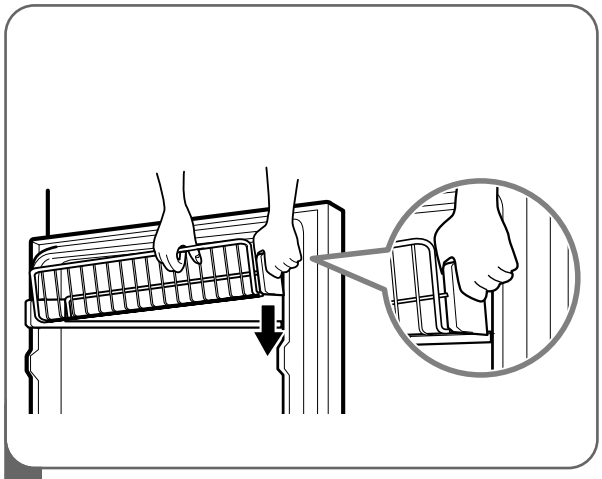

2 To replace the tilt-out door basket, insert the bracket into one side and hook one end of the basket into the bracket. Next, hook the other basket end into the other bracket and push the bracket downward into place.

NOTE: Be sure the back of the basket is positioned behind the retention tab on each bracket.

REMOVING AND REPLACING COMPONENTS (CONT.)

⚠WARNING

Child Entrapment Hazard

- When the divider of the freezer drawer is removed, children may crawl inside.

DuraBase ® Divider

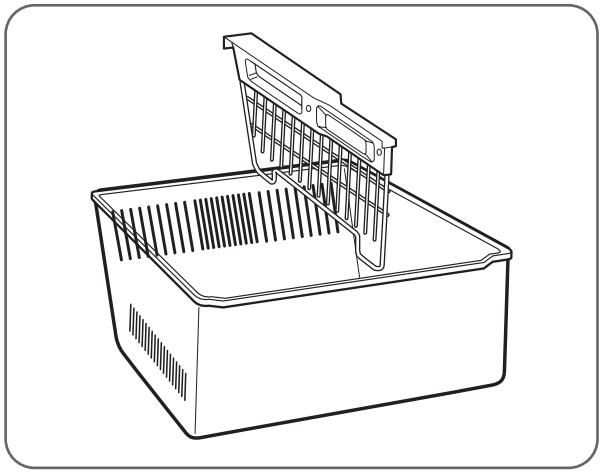

The DuraBase divider organizes the DuraBase area into sections. Pull the divider upward in a straight motion to remove it. To reinstall it, hook the top corners of the divider over the top edge of the DuraBase.

Pull-Out Drawer

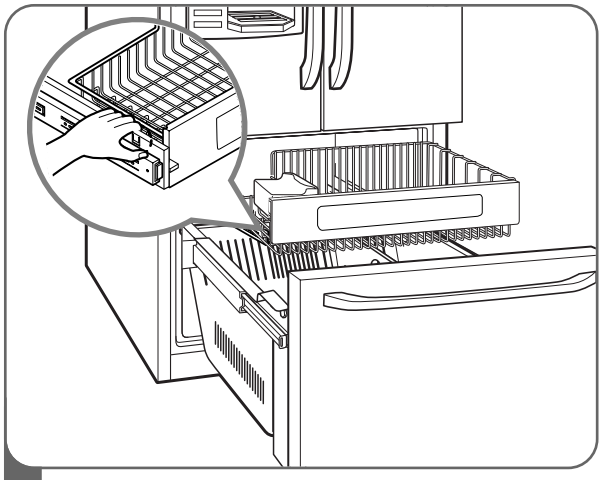

1 To remove the drawer, push the tabs located on the front inside surface of each rail. Next, gently lift the rear left and right sides of the drawer and pull it out.

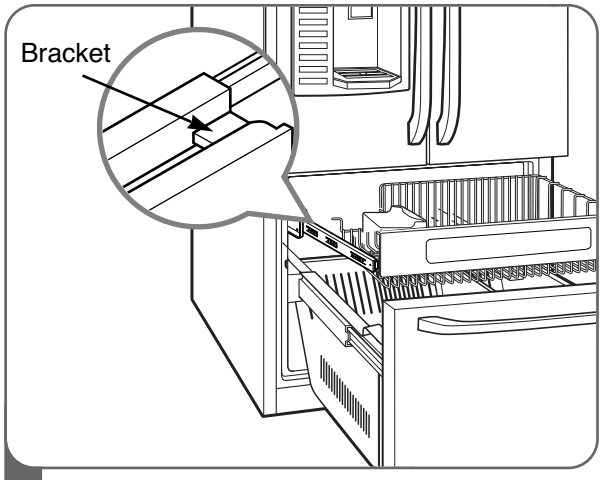

2 To reinstall, pull out both rails to full extension. Insert the end of rib in the bracket at left and right. Making sure that the guides at the front are lined up properly, gently push down on both sides.

CLEANING THE REFRIGERATOR

⚠WARNING

Explosion Hazard

- **Use nonflammable cleaner.**
- **Failure to do so can result in death, explosion, or fire.**

Both the refrigerator and freezer sections defrost automatically. However, clean both sections about once a month to prevent odors. Wipe up spills immediately.

- Unplug the refrigerator.
- Remove all removable parts, such as shelves and crispers.
- Use a clean sponge or soft cloth and a mild detergent in warm water. Do not use abrasive or harsh cleaners.
- Hand wash, rinse, and thoroughly dry all surfaces.
- Plug in the refrigerator.

NOTE: Window sprays, abrasive cleaners, or flammable fluids can scratch or damage plastic covers or panels.

Cleaning the Exterior

For models with a stainless steel exterior, use a commercially available stainless steel cleaner in accordance with the manufacturer's instructions.

You may also use a clean sponge or soft cloth and a mild detergent in warm water. Do not use abrasive or harsh cleaners. Dry thoroughly with a soft cloth.

IMPORTANT: Do not use cleaning waxes, concentrated detergents, or cleaners containing petroleum on plastic refrigerator parts such as door liners or gaskets.

Care and Cleaning of the Interior

NOTE: Allow the freezer to warm so the cleaning cloth will not stick.

To help remove odors, you can wash the inside of the refrigerator with a mixture of baking soda and warm water. Mix 2 tbsp. baking soda to 1 qt. of water (26 g soda to 1 L of water). Be sure the baking soda dissolves completely so it does not scratch the surfaces of the refrigerator.

IMPORTANT: Do not use a spray nozzle to clean the interior.

GENERAL INFORMATION

Storage

During average-length vacations, you will probably find it best to leave the refrigerator in operation. Place freezable items in the freezer for longer life.

When you plan to store the refrigerator, remove all food, disconnect the power cord, clean the interior thoroughly, and block the doors open to prevent mold and mildew. Be certain the stored refrigerator does not present a child entrapment danger.

Moving

Unload the refrigerator to move it. (This is probably not necessary when pulling it out to clean behind it.) Be sure to let the refrigerator warm up to room temperature, and dry the inside before closing the doors to pack it for moving. To avoid damaging the height-adjusting screws, turn them all the way into the base.

Power Failure

Most power failures that are corrected within an hour or two will not affect your refrigerator temperatures. However, you should minimize the number of door openings while the power is off.

Water may drip from the ice bin during a power outage. To prevent this, remove the ice bin, discard all of the ice, towel dry, and replace.

REPLACING THE WATER FILTER

It is recommended that you replace the filter when the water filter indicator reaches **0** or the water dispenser or icemaker noticeably decreases production.

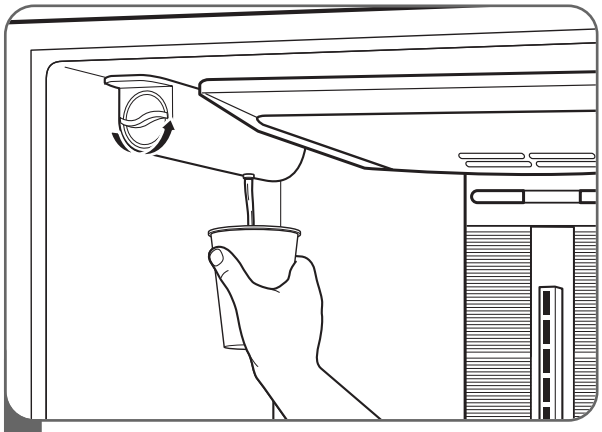

1 Rotate the knob of the old cartridge counterclockwise. When the cartridge is released, you will feel it click out of place.

NOTE: Replacing the filter causes a small amount of water (around 1 oz. or 25 cc) to drain. Place a cup under the filter hole to contain it.

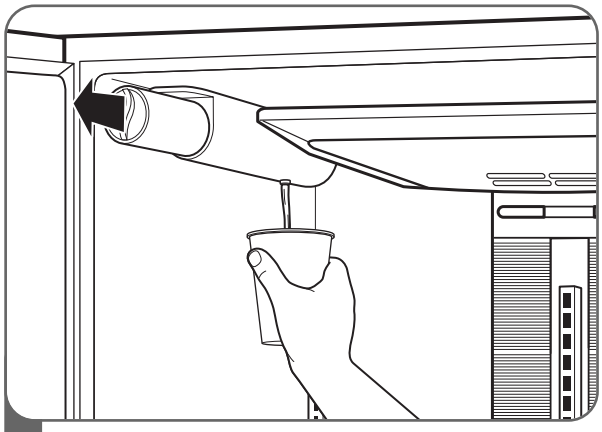

2 Remove the old cartridge. Take the new cartridge out of its packaging, and remove the protective cover from the o-rings. Hold the cartridge handle in its vertical position, and firmly push the new filter cartridge into place until it stops.

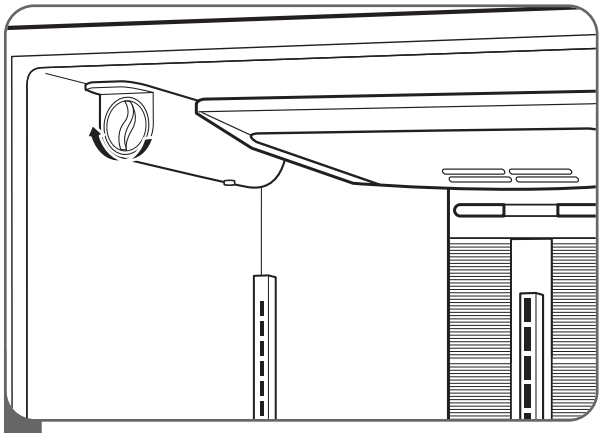

1 Use the handle to twist the cartridge clockwise about one turn, until the handle is in a horizontal position. You will feel the filter click into place.

NOTE: If the filter will not turn from side to side, it isn't fully inserted.

After replacing the filter, dispense 6 or 7 glasses of water from the water dispenser to purge the water system. Check the filter for leaks.

When the water filter indicator displays the message **0 Filter Month, Hold 3 Seconds**, reset the water filter status display and indicator light by pressing and holding the LIGHT/FILTER button for more than 3 seconds.

To purchase replacement water filter cartridges, visit your local appliance dealer or parts distributor.

You can also call 1-877-714-7486.

The replacement water filter cartridge's part number is **5231JA2006A**.

BEFORE CALLING FOR SERVICE

Before calling for service, review this list. It may save you both time and expense. This list includes common occurrences that are not the result of defective workmanship or materials in this appliance.

Problem	Possible Causes	Solutions
Refrigerator compressor does not run.	• Refrigerator control is off. • Refrigerator is in defrost cycle. • Plug at the wall outlet is disconnected. • Power outage. Check house lights.	• Set the refrigerator control. • This is normal for a fully automatic defrosting refrigerator. The defrost cycle occurs periodically. • Make sure the plug is tightly pushed into the outlet. • Call the local electric company.
Refrigerator runs too frequently or too long.	• Refrigerator is larger than the previous one you owned. • The room or the outdoor weather is hot. • Refrigerator was recently disconnected for a while. • Large amounts of warm or hot food may have been stored recently. • Doors are opened too frequently or for too long. • Refrigerator or freezer door may be slightly open. • Refrigerator control is set too cold. • Refrigerator or freezer gasket is dirty, worn, cracked, or poorly fitted.	• This is normal. Larger, more efficient units run longer. • It is normal for the refrigerator to work longer under these conditions. • It takes a few hours for the refrigerator to reach cooling temperatures. • Warm food will cause the refrigerator to run longer until the desired temperature is reached. • Warm air entering the refrigerator causes it to run more. Open the door less often. • Make sure the refrigerator is level. Keep food and containers from blocking the door. • Adjust the refrigerator control to a warmer setting until the refrigerator temperature is satisfactory. • Clean or change the gasket. Leaks in the door seal will cause the refrigerator to run longer in order to maintain desired temperatures.
Refrigerator compressor cycles on and off.	• The thermostat is keeping the refrigerator at a constant temperature.	• This is normal. The refrigerator cycles on and off to keep the temperature constant.
Temperature in the freezer is too cold, but the refrigerator temperature is satisfactory.	• Freezer control is set too cold.	• Adjust the freezer control to a warmer setting until the freezer temperature is satisfactory.
Temperature in the refrigerator is too cold, but the freezer temperature is satisfactory.	• Refrigerator control is set too cold.	• Adjust the refrigerator control to a warmer setting.

BEFORE CALLING FOR SERVICE (CONT.)

Problem	Possible Causes	Solutions
Food stored in refrigerator drawers freezes.	• Refrigerator control is set too cold.	• Adjust the refrigerator to a warmer setting.
Temperatures in the refrigerator or freezer are too warm.	• Freezer or refrigerator control is set too warm. • Doors are opened too frequently or for too long. • Door is slightly open. • Large amounts of warm or hot food may have been stored recently. • Refrigerator has recently been disconnected for a period of time.	• Adjust the freezer or refrigerator control to a colder setting until the freezer or refrigerator temperature is satisfactory. • Warm air enters the refrigerator/freezer whenever the door is opened. Open the door less often. • Close the door completely. • Wait until the refrigerator or freezer has had a chance to cool food to the set temperature. • It takes a few hours for the refrigerator to reach the set temperatures.
Temperature in the refrigerator is too warm, but the freezer temperature is satisfactory.	• Refrigerator control is set too warm.	• Adjust the refrigerator control to a colder setting.
Louder sound levels when compressor comes on.	• Refrigerator operates at higher pressures during the start of the ON cycle.	• This is normal.
Vibrating or rattling noise.	• Floor is uneven or weak. The refrigerator rocks on the floor when it is moved slightly. • Items placed on the top of the refrigerator are vibrating. • Dishes are vibrating on the shelves in the refrigerator. • The refrigerator is touching the wall or cabinets.	• Be sure floor is level and solid and can adequately support the refrigerator. • Remove items. • It is normal for dishes to vibrate slightly. Move dishes slightly. Make sure refrigerator is level and firmly set on floor. • Move the refrigerator so that it does not touch the wall.
Moisture collects on the inside walls of the refrigerator.	• The weather is hot and humid which increases the rate of frost buildup and internal sweating. • Door is slightly open. • Door is opened too often or for too long.	• This is normal. • Close the door. • Open the door less often.
Moisture forms on the outside of the refrigerator or between the doors.	• Weather is humid. • Door is slightly open.	• This is normal in humid weather. When humidity is lower, the moisture should disappear. • Close the door completely.

BEFORE CALLING FOR SERVICE (CONT.)

Problem	Possible Causes	Solutions
Moisture forms on the dispenser.	• Moisture may form when the temperature or humidity are high.	• Wipe off the moisture.
Odors in the refrigerator.	• Interior needs to be cleaned. • Food with strong odor is in the refrigerator. • Some containers and wrapping materials produce odors.	• Clean interior with sponge, warm water, and baking soda. Be sure the soda is completely dissolved so it will not act as an abrasive compound. • Cover food completely. • Use a different container or brand of wrapping materials.
The door(s) will not close.	• Food package is keeping the door open. • Door was closed too hard, causing other door to open slightly. • Refrigerator is not level. It rocks on the floor when it is moved slightly. • Floor is uneven or weak. The refrigerator rocks on the floor when it is moved slightly. • Refrigerator is touching the wall or the cabinets.	• Move the packages that keep the door from closing. • Gently close both doors. • Adjust the height-adjusting screw. • Be sure the floor is level and can adequately support the refrigerator. Contact a carpenter to correct sagging or sloping floor. • Move the refrigerator.
Drawers are difficult to move.	• Food is touching the shelf on top of the drawer. • The drawer track is dirty.	• Keep less food in the drawer. • Clean the drawer and the track.
The dispenser will not dispense water.	• The household water-line valve is not open. • The refrigerator or freezer door is not closed. • When a installed tube is bent. • When a filter is old.	• Open the household water-line valve. • Be sure both doors are closed. • Check the installed tube. • Replace with a new filter.
Water has an odd taste and/or odor.	• The water has been in the tank for too long. • The unit is not properly connected to cold water line. • When a filter is old.	• Dispense for 2 minutes and discard to freshen the supply. Dispense and discard for an additional 2 minutes to rinse the tank completely. • Connect the unit to a cold water line that supplies water to the kitchen faucet. • Replace with a new filter.

BEFORE CALLING FOR SERVICE (CONT.)

Problem	Possible Causes	Solutions
The dispenser will not dispense ice.	• The ice storage bin is empty.	• When the first supply of ice is dropped into the bin, the dispenser should operate.
	• The household water-line valve is not open.	• Open the household water line valve and allow sufficient time for ice to be made. When ice is made, the dispenser should operate.
	• The refrigerator or freezer door is not closed.	• Be sure both of the doors are closed.
	• Ice has melted and frozen around the auger due to infrequent use, temperature fluctuations, and/or power outages.	• Remove the ice storage bin and thaw the contents. Clean the bin, wipe it dry, and replace it in its proper position. When new ice is made, the dispenser should operate.
	• Ice cubes are jammed between the icemaker arm and the back of the bin.	• Remove the ice cubes that are jamming the dispenser.
	• Ice cubes are frozen together.	• Use the dispenser often to prevent the cubes from freezing together.
	• Ice cubes that have been purchased or made in some other way have been used in the dispenser.	• Only the ice cubes made by the icemaker should be used with the dispenser.
	• When a installed tube is bent.	• Check the installed tube.
Sound of ice dropping.	• A batch of ice has been released into the ice bin.	• This sound is made when automatically made ice is dropped into the ice storage bin. The volume may vary according to the location of the refrigerator.
Sound of water trickling.	• The icemaker is being supplied with water.	• This sound is normally made when the icemaker is supplied with water after dropping the automatically made ice.
Other	Please thoroughly read the Automatic Icemaker and Operating the Dispenser sections in this manual.	

KEY DIMENSIONS AND SPECIFICATIONS

The appearance and specifications listed in this guide may vary due to constant product improvements.

Bottom-Freezer Refrigerator Model LFX21980	
Description	French Door Refrigerator
Electrical Requirements	115 VAC @ 60 Hz
Min. / Max. Water Pressure	21~121 PSI (1.5~8.5 kgf/cm^2)
Dimensions	35 3/4" (W) X 30 1/4" (D) X 69 3/4" (H), 42 1/4" (D w/ door open) 908 mm (W) X 763 mm (D) X 1771 mm (H), 1073 mm (D w/ door open)
Net Weight	288 lb. (131 kg)
Refrigerator Storage Capacity	14.7 cu. ft.
Freezer Storage Capacity	5.8 cu. ft.

Bottom-Freezer Refrigerator Model LFX25980	
Description	French Door Refrigerator
Electrical Requirements	115 VAC @ 60 Hz
Min. / Max. Water Pressure	21~121 PSI (1.5~8.5 kgf/cm^2)
Dimensions	35 3/4" (W) X 34 1/4" (D) X 69 3/4" (H), 46 1/2" (D w/ door open) 908 mm (W) X 869 mm (D) X 1771 mm (H), 1181 mm (D w/ door open)
Net Weight	324 lb. (147 kg)
Refrigerator Storage Capacity	17.6 cu. ft.
Freezer Storage Capacity	7.1 cu. ft.

LG ELECTRONICS, INC.
LG BOTTOM-FREEZER REFRIGERATOR LIMITED WARRANTY – USA

Your LG Refrigerator will be repaired or replaced, at LG's option, if it proves to be defective in material or workmanship under normal use, during the warranty period ("Warranty Period") set forth below, effective from the date ("Date of Purchase") of original consumer purchase of the product. This warranty is good only to the original purchaser of the product and effective only when used in the United States, including Alaska, Hawaii, and U.S. Territories.

WARRANTY PERIOD:	HOW SERVICE IS HANDLED:
REFRIGERATOR/FREEZER **LABOR: One Year** from the Date of Purchase. **PARTS: One Year** from the Date of Purchase. **SEALED SYSTEM** (Compressor, Condenser, and Evaporator) **LABOR: One Year** from the Date of Purchase. **PARTS: Seven years** from the Date of Purchase. Replacement Units and Repair Parts are warranted for the remaining portion of the original unit's warranty period.	**In-Home Service:** Please retain dealer's dated bill of sale or delivery ticket as evidence of the Date of Purchase for proof of warranty, and submit a copy of the bill of sale to the service person at the time warranty service is provided. **Please call 1-800-243-0000 and choose the appropriate option to locate your nearest LG Authorized Service Center.** Or visit our website at: **http://us.lgservice.com**

THIS WARRANTY IS IN LIEU OF ANY OTHER WARRANTY, EXPRESS OR IMPLIED, INCLUDING WITHOUT LIMITATION, ANY WARRANTY OF MERCHANTABILITY OR FITNESS FOR A PARTICULAR PURPOSE. TO THE EXTENT ANY IMPLIED WARRANTY IS REQUIRED BY LAW, IT IS LIMITED IN DURATION TO THE EXPRESS WARRANTY PERIOD ABOVE. NEITHER THE MANUFACTURER NOR ITS U.S. DISTRIBUTOR SHALL BE LIABLE FOR ANY INCIDENTAL, CONSEQUENTIAL, INDIRECT, SPECIAL, OR PUNITIVE DAMAGES OF ANY NATURE, INCLUDING WITHOUT LIMITATION, LOST REVENUES OR PROFITS, OR ANY OTHER DAMAGE WHETHER BASED IN CONTRACT, TORT, OR OTHERWISE. Some states do not allow the exclusion or limitation of incidental or consequential damages or limitations on how long an implied warranty lasts, so the above exclusion or limitation may not apply to you. This warranty gives you specific legal rights and you may also have other rights that vary from state to state.

THIS LIMITED WARRANTY DOES NOT APPLY TO:

- Service trips to your home to deliver, pick up, and/or install the product, instruct, or replace house fuses or correct wiring, or correction of unauthorized repairs.
- Damages or operating problems that result from misuse, abuse, operation outside environmental specifications or contrary to the requirements of precautions in the Operating Guide, accident, vermin, fire, flood, improper installation, acts of God, unauthorized modification or alteration, incorrect electrical current or voltage, or commercial use, or use for other than intended purpose.
- Repairs when your LG refrigerator is used in other than normal, single-family household use.
- Damages caused during and/or after delivery.
- Display, discount, or refurbish units purchased with scratches, dents, or defects.

The cost of repair or replacement under these excluded circumstances shall be borne by the consumer.
Proof of purchase is required and must be provided to LG in order to validate warranty.

CUSTOMER INTERACTIVE CENTER NUMBERS

To obtain Customer Assistance, Product Information, or Dealer or Authorized Service Center location:	**Call 1-800-243-0000** (24 hours a day, 365 days a year) and select the appropriate option from the menu. Or visit our Web site at **http://us.lgservice.com**

TO CONTACT LG ELECTRONICS BY MAIL:

LG Customer Interactive Center
P. O. Box 240007
201 James Record Road
Huntsville, Alabama 35813
ATTN: CIC

Product Registration Information

Model:

Serial Number:

Date of Purchase:

The model and serial number can be located on the inner case or back of the refrigerator compartment.

LG ELECTRONICS, INC.
LG BOTTOM-FREEZER REFRIGERATOR LIMITED WARRANTY – CANADA

LG Electronics will repair or at its option replace, without charge, your product which proves to be defective in material or workmanship under normal use, during the warranty period listed below from the date of original purchase.
This warranty is good only to the original purchaser of the product during the warranty period as long as it is in any Canadian Province.

WARRANTY PERIOD:	HOW SERVICE IS HANDLED:
REFRIGERATOR/FREEZER **LABOR: One Year** from the Date of Purchase. **PARTS: One Year** from the Date of Purchase. **SEALED SYSTEM** (Compressor, Condenser, and Evaporator) **LABOR: One Year** from the Date of Purchase. **PARTS: Seven Years** from the Date of Purchase.	Call **1-888-542-2623 (1-888-LG-CANADA)** and choose the appropriate prompt. Please have product type (refrigerator) and Postal Code ready. See our Web site at **www.lg.ca** This warranty provides in-home service. **NOTE:** To prove warranty covers, retain your Sales Receipt to prove date of purchase. A copy of your Sales Receipt must be submitted at the time warranty service is provided.

No other express warranty is applicable to this product. THE DURATION OF ANY IMPLIED WARRANTIES, INCLUDING **THE IMPLIED WARRANTY OF MERCHANTABILITY, INC. IS LIMITED TO THE DURATION OF THE EXPRESS WARRANTY HEREIN. LG ELECTRONICS CANADA, INC. SHALL NOT BE LIABLE FOR THE LOSS OF THE USE OF THE PRODUCT, INCONVENIENCE, LOSS OR ANY OTHER DAMAGES, DIRECT OR CONSEQUENTIAL, ARISING OUT OF THE USE OF, OR INABILITY TO USE, THIS PRODUCT OR FOR ANY BREACH OF ANY EXPRESS OR IMPLIED WARRANTY, INCLUDING THE IMPLIED WARRANTY OF MERCHANTABILITY APPLICABLE TO THIS PRODUCT.** Some provinces do not allow the exclusion or limitation of incidental or consequential damages or limitations on how long an implied warranty lasts; so these limitations or exclusions may not apply to you. This warranty gives you specific legal rights and you may also have other rights which vary from province to province.

THIS LIMITED WARRANTY DOES NOT APPLY TO:

- Service trips to your home to deliver, pick up, and/or install the product, instruct, or replace house fuses or correct wiring, or correction of unauthorized repairs.
- Damages or operating problems that result from misuse, abuse, operation outside environmental specifications or contrary to the requirements of precautions in the Operating Guide, accident, vermin, fire, flood, improper installation, acts of God, unauthorized modification or alteration, incorrect electrical current or voltage, or commercial use, or use for other than intended purpose.
- Repairs when your LG refrigerator is used in other than normal, single-family household use.
- Damages caused during and/or after delivery.
- Display, discount, or refurbish units purchased with scratches, dents, or defects.

The cost of repair or replacement under these excluded circumstances shall be borne by the consumer.
Proof of purchase is required and must be provided to LG in order to validate warranty.

CUSTOMER ASSISTANCE NUMBERS

To obtain Customer Assistance, Product Information, or Dealer or Authorized Service Center location:	**Call 1-888-542-2623 (1-888-LG-CANADA)** and choose the appropriate prompt. Please have your product type (refrigerator) and Postal Code ready. Or visit our Web site at **www.lg.ca.**

Product Registration Information

Model:

Serial Number:

Date of Purchase:

The model and serial number can be located on the inner case or back of the refrigerator compartment.

P/No. MFL37933520