JVC

DVD DIGITAL CINEMA SYSTEM

TH-G61

Consists of XV-THG61, SP-THG61F, SP-THG51F, SP-THG61C and SP-THG50W





DVD VIDEO

DOLBY DIGITAL PRO LOGIC II

HDMI HIGH DEFINITION MULTIMEDIA INTERFACE

dts Digital Surround

FULL HD UP-SCALING

Plays Windows Media™

DIVX®

INSTRUCTIONS

LVT2054-019A
[UN]



CAUTION: TO REDUCE THE RISK
OF ELECTRIC SHOCK
DO NOT REMOVE COVER (OR BACK)
NO USER-SERVICEABLE PARTS INSIDE
REFER SERVICING TO QUALIFIED SERVICE
PERSONNEL.



This lightning flash with arrowhead symbol within an equilateral triangle is intended to alert the user to the presence of uninsulated dangerous voltage within the product's enclosure that may be of sufficient magnitude to constitute a risk of electric shock to persons.



The exclamation point within an equilateral triangle is intended to alert the user to the presence of important operating and maintenance (servicing) instructions in the literature accompanying the product.

WARNING: TO REDUCE THE RISK OF FIRE OR ELECTRIC SHOCK, DO NOT EXPOSE THIS APPARATUS TO RAIN OR MOISTURE AND OBJECTS FILLED WITH LIQUIDS, SUCH AS VASES, SHOULD NOT BE PLACED ON THIS APPARATUS.

WARNING: Do not install this equipment in a confined space such as a bookcase or similar unit.

CAUTION: Do not block any ventilation openings. Install in accordance with the manufacturer's instructions.

Slots and openings in the cabinet are provided for ventilation and to ensure reliable operation of the product and to protect it from over heating.
The openings shall be never be blocked by placing the product on a bed, sofa, rug or other similar surface. This product shall not be placed in a built-in installation such as a bookcase or rack unless proper ventilation is provided or the manufacturer's instruction have been adhered to.

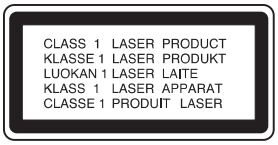

CAUTION:
This product employs a Laser System.
To ensure proper use of this product, please read this owner's manual carefully and retain it for future reference. Shall the unit require maintenance, contact an authorized service center.
Use of controls, adjustments or the performance of procedures other than those specified herein may result in hazardous radiation exposure.
To prevent direct exposure to laser beam, do not try to open the enclosure. Visible laser radiation when open. DO NOT STARE INTO BEAM.

CAUTION:
- **Do not block the ventilation openings or holes. (If the ventilation openings or holes are blocked by a newspaper or cloth, etc., the heat may not be able to get out.)**
- **Do not place any naked flame sources, such as lighted candles, on the apparatus.**
- **When discarding batteries, environmental problems must be considered and local rules or laws governing the disposal of these batteries must be followed strictly.**
- **Do not expose this apparatus to rain, moisture, dripping or splashing and that no objects filled with liquids, such as vases, shall be placed on the apparatus.**
- **Battery shall not be exposed to excessive heat such as sunshine, fire or the like.**
- **The STANDBY/ON button does not completely shut off mains power from the unit, but switches operating current on and off.**

CAUTION: The apparatus should not be exposed to water (dripping or splashing) and no objects filled with liquids, such as vases, should be placed on the apparatus.

CAUTION concerning the Power Cord

Most appliances recommend they be placed upon a dedicated circuit;
That is, a single outlet circuit which powers only that appliance and has no additional outlets or branch circuits. Check the specification page of this owner's manual to be certain.

Do not overload wall outlets. Overloaded wall outlets, loose or damaged wall outlets, extension cords, frayed power cords, or damaged or cracked wire insulation are dangerous. Any of these conditions could result in electric shock or fire. Periodically examine the cord of your appliance, and if its appearance indicates damage or deterioration, unplug it, discontinue use of the appliance, and have the cord replaced with an exact replacement part by an authorized servicer.

Protect the power cord from physical or mechanical abuse, such as being twisted, kinked, pinched, closed in a door, or walked upon. Pay particular attention to plugs, wall outlets, and the point where the cord exits the appliance.

To disconnect power from the mains, pull out the mains cord plug. When installing the product, ensure that the plug is easily accessible.

Contents

Introduction 2-5

About the ⊘ Symbol Display 2
Symbol Used in this Manual 2
Screen Saver 2
Notes on Discs 2
Handling Discs 2
Storing Discs 2
Cleaning Discs 2
Types of Playable Discs 3
Regional Code 3
Front Panel 4
Remote Control 5
Remote Control operation 5
Remote Control Battery installation 5

Installation and Setup 6-15

TV Connection 6
Video connection 6
Component Video connection 6
Antenna Connection 6
Optional Equipment Connection 7
AUX IN connection (A) 7
OPTICAL IN connection (O) 7
AUDIO IN connection (D) 7
USB connection (U) 8
HDMI Connection 9
About HDMI 9
Resolution setting 9
Available resolution according to connection .9
Speaker System Connection 10
Displaying Disc Information on-screen 11
Initial Settings 11-15
OSD Initial language settings 11
General Operation 12
LANGUAGE 12
• Menu language 12
• Disc Audio / Subtitle / Menu 12
DISPLAY 12
• TV Aspect 12
• Display Mode 12
AUDIO 13
• Dynamic Range Control (DRC) 13
• Vocal 13
• HD AV Sync 13
• Semi Karaoke 13
5.1 Speaker setup 13-14
LOCK (Parental Control) 14-15
• Initial Setting the Area Code 14
• Rating 15
• Password 15
• Area Code 15
OTHERS 15
• DivX(R) VOD 15

Operation 16-24

General features 16
Additional features 17
Playing an Audio CD or MP3/WMA file 18
Programmed Playback 19
Repeat Programmed Tracks 19
Erasing a Track from Program List 19
Erasing the Complete Program List 19
Viewing a JPEG file 20-21
Slide Show 20
Still Picture 21
Moving to another file 21
Rotating the picture 21
Listening to music during slide show 21
Playing a DivX Movie file 22
Presetting the Radio Stations 23
To tune in a station with a weak signal 23
To clear all the stored stations 23
Listening to the Radio 23
To turn off the radio 23
To listen to non-preset radio stations 23
To select a preset radio station directly 23
Sleep Timer Setting 24
Dimmer 24
Muting 24
Setting the disc ejection lock 24
Enjoying audio form an external source 24
Setting the surround mode 24

Reference 25-28

Language Codes 25
Area Codes 25
Troubleshooting 26-27
Specifications 28

Introduction

To ensure proper use of this product, please read this owner's manual carefully and retain it for future reference.

This manual provides information on the operation and maintenance of your DVD player. Should the unit require service, contact an authorized service location.

About the ⊘ Symbol Display

" ⊘ " may appear on your TV display during operation and indicates that the function explained in this owner's manual is not available on that specific DVD video disc.

Symbol Used in this Manual

Note:
Indicates special notes and operating features.

Tip:
Indicates tips and hints for making the task easier.

A section whose title has one of the following symbols is applicable only to the disc represented by the symbol.

- **ALL** All discs and file listed below
- **DVD** DVD and finalized DVD±R/RW
- **VCD** Video CDs
- **ACD** Audio CDs
- **MP3** MP3 files
- **WMA** WMA files
- **JPEG** JPEG files
- **DivX** DivX files

Screen Saver

The screen saver activates when there is no operation made for approximately 5 minutes since a still picture was last displayed.

To cancel the screen saver, push any key.

Notes on Discs

Handling Discs

Do not touch the playback side of the disc. Hold the disc by the edges so that fingerprints do not get on the surface. Never stick paper or tape on the disc.



Storing Discs

After playing, store the disc in its case. Do not expose the disc to direct sunlight or sources of heat and never leave it in a parked car exposed to direct sunlight.

Cleaning Discs

Fingerprints and dust on the disc can cause poor picture quality and sound distortion. Before playing, clean the disc with a clean cloth. Wipe the disc from the center out.

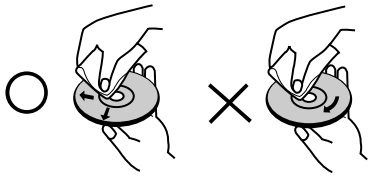

Do not use strong solvents such as alcohol, benzine, thinner, commercially available cleaners, or anti-static spray intended for older vinyl records.

Types of Playable Discs

DVD VIDEO	DVD (8 cm / 12 cm disc)
COMPACT disc DIGITAL VIDEO	Video CD (VCD) (8 cm / 12 cm disc)
COMPACT disc DIGITAL AUDIO	Audio CD (8 cm / 12 cm disc)

In addition, this unit can play a DVD±R, DVD±RW, SVCD and CD-R or CD-RW that contains audio titles, MP3, WMA, JPEG or DivX files.

Notes:

- Depending on the conditions of the recording equipment or the CD-R/RW (or DVD±R/RW) disc itself, some CD-R/RW (or DVD±R/RW) discs may not be played on the unit.
- Do not use irregularly shaped CDs (e.g., heart-shaped or octagonal) since they may result in malfunctions.
- This unit requires discs and recordings to meet certain technical standards in order to achieve optimal playback quality. Pre-recorded DVDs are automatically set to these standards. There are many different types of recordable disc formats (including CD-R containing MP3 or WMA files) and these require certain pre-existing conditions (see above) to ensure compatible playback.

  Customers should note that permission is required in order to download MP3 / WMA files and music from the Internet. Our company has no right to grant such permission. Permission should always be sought from the copyright owner.

Regional Code

This unit has a regional code printed on the rear of the unit. This unit can play only DVD discs labelled as the same as the rear of the unit or “ALL”.

Notes on Regional Codes

- Most DVD discs have a globe with one or more numbers in it clearly visible on the cover. This number must match your unit’s regional code or the disc cannot play.
- If you try to play a DVD with a different regional code from your player, the message “Check Regional Code” appears on the TV screen.

Notes on Copyrights:

It is forbidden by law to copy, broadcast, show, broadcast via cable, play in public, or rent copyrighted material without permission. This product features the copy protection function developed by Macrovision. Copy protection signals are recorded on some discs. When recording and playing the pictures of these discs picture noise will appear. This product incorporates copyright protection technology that is protected by method claims of certain U.S. patents and other intellectual property rights owned by Macrovision Corporation and other rights owners. The Use of this copyright protection technology must be authorized by Macrovision Corporation, and is intended for home and other limited viewing uses only unless otherwise authorized by Macrovision Corporation. Reverse engineering or disassembly is prohibited.

CONSUMERS SHOULD NOTE THAT NOT ALL HIGH DEFINITION TELEVISION SETS ARE FULLY COMPATIBLE WITH THIS PRODUCT AND MAY CAUSE ARTIFACTS TO BE DISPLAYED IN THE PICTURE. IN CASE OF 525 PROGRESSIVE SCAN PICTURE PROBLEMS, IT IS RECOMMENDED THAT THE USER SWITCH THE CONNECTION TO THE ‘STANDARD DEFINITION’ OUTPUT. IF THERE ARE QUESTIONS REGARDING OUR TV SET COMPATIBILITY WITH THIS MODEL 525p DVD PLAYER, PLEASE CONTACT OUR CUSTOMER SERVICE CENTER.

Front Panel

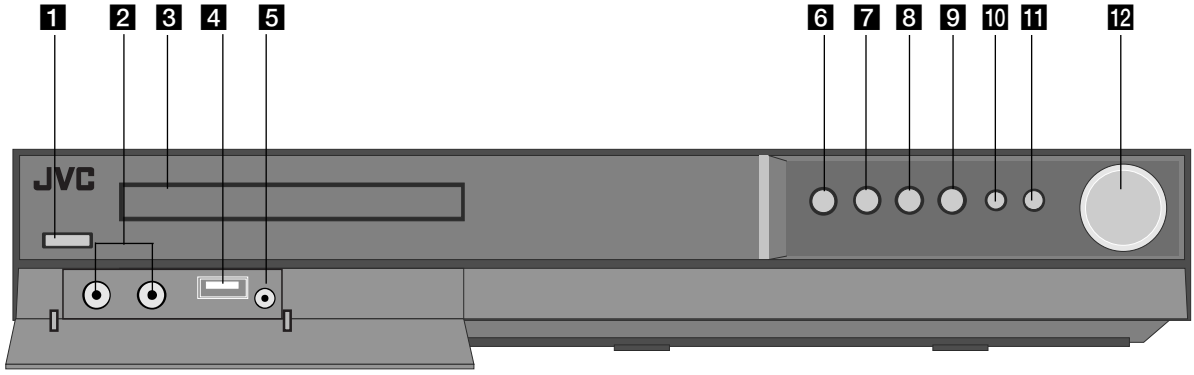

1 **⏻/I (STANDBY/ON)**
Switches the unit ON and OFF.

2 **MIC1/2**
Connect a microphone to MIC 1 or MIC 2 to sockets.

3 **Disc Tray**
Insert a disc here.

4 **USB port**
Connect to a USB port of a memory device (USB memory etc.)

5 **AUDIO IN**
The AUDIO IN port means you can connect a audio device to play through the surround sound speakers.

6 **⏏ (OPEN/CLOSE)**
Opens or closes the disc tray.

7 **■ (STOP)**
Stops playback.

8 **► (PLAY)**
Starts playback.
SOURCE
Press and hold down this button about 3 seconds, then press repeatedly to select other function

9 **II (PAUSE)**
Pause playback.
FM MODE
This will change the tuner from stereo to mono and usually improve the reception.

10 **I◄◄ (SKIP)**
Returns to the beginning of current chapter or track or go to the previous chapter or track.
(SCAN)
During playback, press and hold this button repeatedly to select the required scan speed.
- TUNING
Tunes in the desired radio station.

11 **►►I (SKIP)**
Go to the next chapter or track.
(SCAN)
During playback, press and hold this button repeatedly to select the required scan speed.
+ TUNING
Tunes in the desired radio station.

12 **VOLUME controller**

Remote Control

AUDIO (⏻/I)
Switches the unit ON and OFF.

FUNCTION
Selects the function (DVD/CD, FM, AM)

INPUT
Changes the input source (USB, AUX, AUX OPT, AUDIO IN)

SLEEP
Sets the System to turn off automatically at a specified time.

DIMMER
Changes brightness of the display window on the front panel during in power-on status.

RETURN
Press to move back wards in the menu.

TOP MENU
If the current DVD title has a menu, the title menu appears on the screen. Otherwise, the disc menu may appear.

MENU
Accesses the menu on a DVD disc.

SET UP
Accesses or removes setup menu.

DISPLAY
Accesses On-Screen display.

◀/▶/▲/▼ (left/right/up/down)
Selects an option in the menu.

ENTER
Acknowledges the menu selection.

PRESET (⊖/⊕)
Selects program of Radio.

TUNING. (⊖/⊕)
Tunes in the desired radio station.

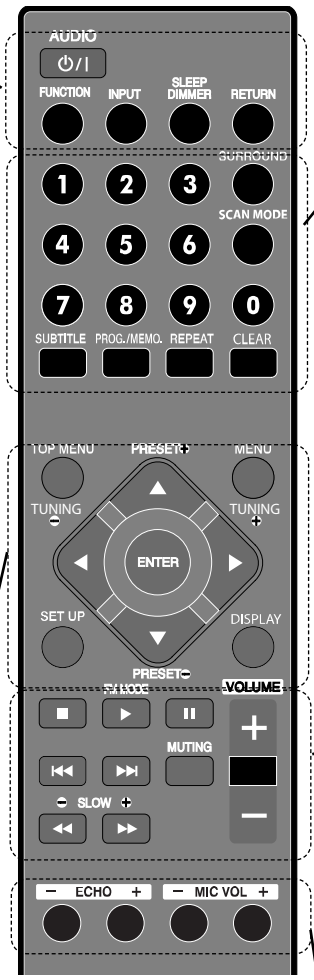

0-9 numerical buttons: Selects numbered options in a menu.

SURROUND
Selects the surround mode.

SCAN MODE
Sets the output resolution for HDMI and COMPONENT VIDEO OUT jacks.

SUBTITLE
Selects a subtitle language (DVD).

PROG./MEMO.
Accesses or removes Program menu.
Enter a radio station's frequency into the tuner.

REPEAT
Repeats chapter, track, title, all

CLEAR
Removes a track number on the Program List.

SCAN/SLOW(◀◀/▶▶)
Searches backward or forward.
Reverse/ Forward slow playback.

SKIP (I◀◀/▶▶I)

STOP (■)

PLAY (▶)

FM MODE
This will change the tuner from stereo to mono and usually improve the reception.

PAUSE (II)

VOLUME (-/+)
Adjusts speaker volume.

MUTING
To mute the sound

ECHO (-/+)
Adjusts echo volume.

MIC VOL (-/+)
Adjusts microphone volume.

Remote Control operation
Point the remote control at the remote sensor and press the buttons.

Cautions:

- Do not mix old and new batteries and never mix different types of batteries such as standard, alkaline, etc.
- Do not put the batteries in the place where young children can reach.
- Battery shall not be exposed to excessive heat such as sunshine, fire or the like.
- When discarding batteries, environmental problems must be considered and local rules or laws governing the disposal of these batteries must be followed strictly.

Remote Control Battery installation

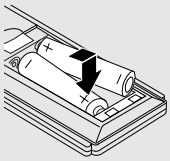

Detach the battery cover on the rear of the remote control, and insert two batteries (size AAA) with ⊕ and ⊖ aligned correctly.

Installation and Setup

TV Connection

Make one of the following connections, depending on the capabilities of your existing equipment.

Tips:

- Depending on your TV and other equipment you wish to connect, there are various ways you could connect the DVD/CD Receiver. Use one of the connections described below.
- Please refer to the manuals of your TV, VCR, Stereo System or other devices as necessary to make the best connections.

Caution:

- Make sure the DVD/CD Receiver is connected directly to the TV. Select the correct AV input on your TV.
- Do not connect your DVD/CD Receiver to TV via your VCR. The DVD image could be distorted by the copy protection system.

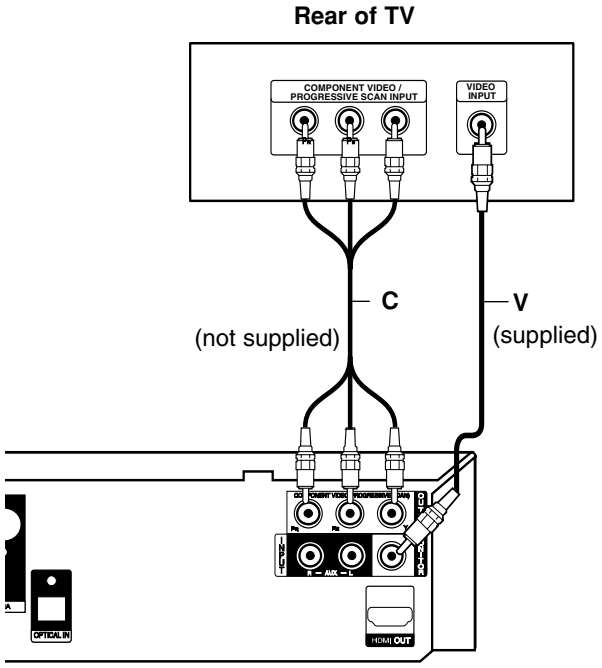

Rear of DVD/CD Receiver

Video connection

Connect the MONITOR OUT jack from the DVD/CD Receiver to the VIDEO IN jack on the TV using the video cable **(V)**.

Component Video connection

Connect the COMPONENT VIDEO OUT jacks from the DVD/CD Receiver to the corresponding jacks on the TV using an Y P_B P_R cable **(C)**.

- If your television is a high-definition or “digital ready” television, you may take advantage of the DVD/CD Receiver’s progressive scan output for the highest video resolution.
- If your TV does not accept your resolution setting, abnormal picture appears on the screen. Please read owner’s manual for TV then set the resolution that your TV can accept.

Antenna Connection

Connect the supplied FM/AM antenna for listening to the radio.

- Connect the AM Loop antenna to the AM antenna connector.
- Connect the FM Wire antenna to the FM antenna connector.

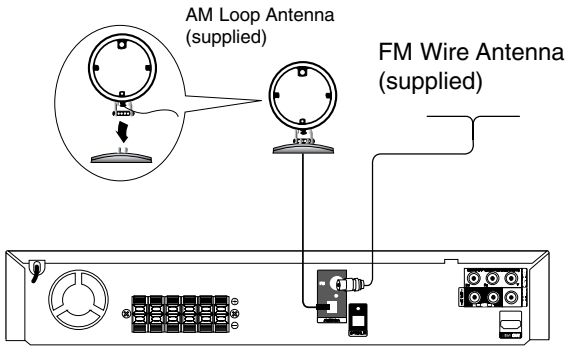

Notes:

- To prevent noise pickup, keep the AM Loop antenna away from the DVD/CD Receiver and other components.
- Be sure to fully extend the FM wire antenna.
- After connecting the FM Wire antenna, keep it as horizontal as possible.

Optional Equipment Connection

Rear of DVD/CD Receiver

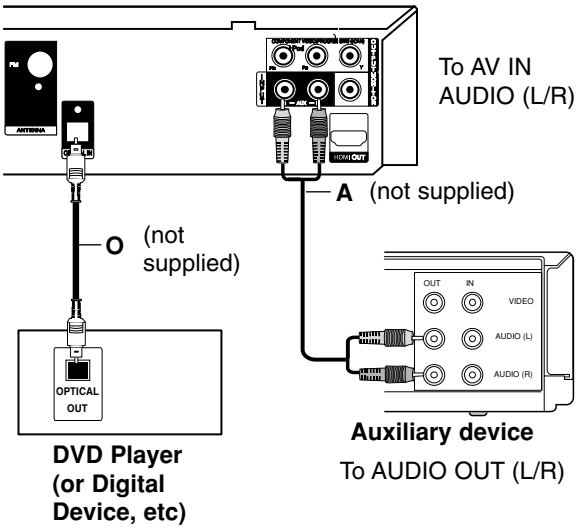

DVD Player (or Digital Device, etc)

Auxiliary device

To AUDIO OUT (L/R)

AUX IN connection (A)

Connect a Output of auxiliary device to the AUX AUDIO Input (L/R) Connector.

OPTICAL IN connection (O)

Connect an optical output of DVD Player (or Digital Device etc) to the OPTICAL IN connector.

AUDIO IN connection (D)

Connect a output of portable device (MP3 or PMP etc) to the AUDIO input connector.

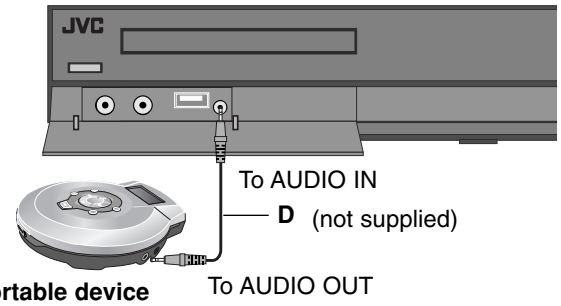

Portable device

Optional Equipment Connection

USB connection (U)

Connect the USB port of USB Memory (or MP3 player, etc.) to the USB port on the front of the unit.

If you want to opterate functions, see the operation section.

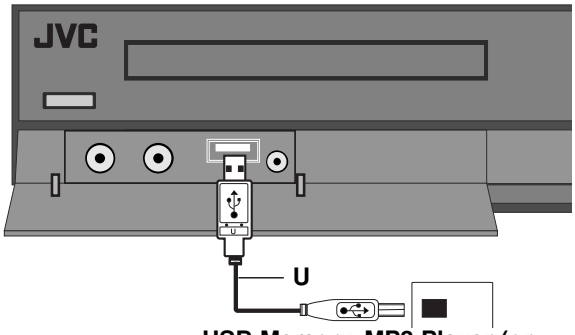

USB Memory, MP3 Player (or Memory Card Reader, etc.)

Removing the USB Device from the unit

1. Choose a different function mode or press STOP (■) twice in a row.
2. Remove the USB device from the unit.

Notes:

- Don't extract the USB device while operating.
- Music files (MP3/WMA), image files (JPEG) and video files can be played.
- This unit can not use a USB HUB.
- Devices which require additional program installation when you have connected the unit to a computer are not supported.
- In case of a USB HDD, make sure to connect an auxiliary power cord to the USB HDD for proper operation. Up to four primary partitions of a drive are supported. If there is an extension partition, it will not be supported.
- If the drive of USB device is two or more, a drive folder is displayed on the screen. If you want to move to the initial menu after you select a folder, press RETURN.
- Digital cameras and mobile phones are not supported.

HDMI Connection

About HDMI

HDMI (High Definition Multimedia Interface) supports both video and audio on a single digital connection for an easy all- digital output to an HDMI or DI-equipped TV.

Connection to an HDMI TV requires an HDMI cable while connection to a DVI-equipped TV requires a DVI adapter besides a HDMI cable.

HDMI has the capability to support standard, enhanced, or high-definition video plus standard to multi-channel surround-sound audio, HDMI features include uncompressed digital video, a bandwidth of up to 5 gigabytes per second, one connector (instead of several cables and connector), and communication between the AV source and AV devices such as DTVs.

HDMI, the HDMI logo and High-Definition Multimedia Interface are trademarks or registered trademarks of HDMI licensing LLC.

If you have a HDMI TV or monitor, you can connect it to this DVD/CD Receiver using a HDMI cable.

1. Connect the HDMI OUT jack on the DVD/CD Receiver to the HDMI jack on a HDMI compatible TV or monitor (H).
2. Set the TV's source to HDMI (refer to owner's manual for TV).

Notes on HDMI Out connection

- If your TV does not accept your resolution setting, abnormal picture appears on the screen.("TV do not support" will appears in screen)
  Please read owner's manual for TV, and then set the resolution that your TV can accept.
- Changing the resolution when the unit is connected with HDMI connector may result in malfunctions. To solve the problem, turn off the unit and then turn it on again.
- When you connect a HDMI or DVI compatible device make sure of the following :
  - Try switching off the HDMI/ DVI device and this unit. Next, switch on the HDMI/ DVI device and leave it for around 30 seconds, then switch on this unit.
  - The connected device's video input is set correctly for this unit.
  - The connected device is compatible with 720X576i(480i), 720X576p(480p), 1280X720p, 1920X1080i or 1920X1080p video input.
  - The 1080p, 720p and 576p(480p) resolutions are the progressive scan applied resolution.
- Not all HDCP-compatible DVI devices will work with this unit.
  - The picture will not be displayed properly with non-HDCP device.

HDMI compatible TV

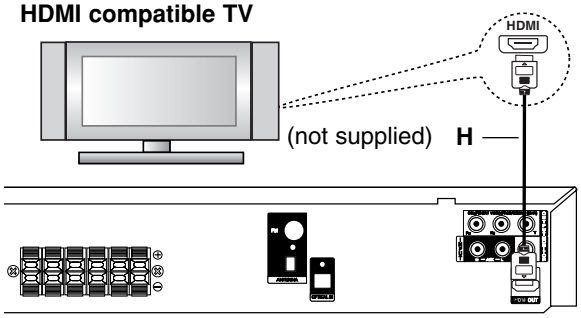

Rear of DVD/CD Receiver

Resolution setting

You can change the resolution for component video and HDMI output.
Press **SCAN MODE** repeatedly to select the desired resolution - 480i (or 576i), 480p (or 576p), 720p, 1080i, 1080p
The resolution may not be selected depending on the connection or TV.

Note:

Depending on your TV, some of the resolution settings may result in the picture disappearing or an abnormal picture appearing. In this case, press **SCAN MODE** repeatedly until the picture re-appears.
You can set 1080p video resolution to enjoy Full HD picture quality. (Full HD up-scaling)

Available resolution according to connection

HDMI OUT - 1080p, 1080i, 720p, 480p (or 576p) and 480i (or 576i)
COMPONENT VIDEO OUT - 480p (or 576p) and 480i (or 576i)
VIDEO OUT - 480i (or 576i)

Note:

If your TV does not accept your resolution setting, abnormal picture appears on the screen.
Please read owner's manual for TV, and then set the resolution that your TV can accept.

Speaker System Connection

Connect the speakers using the supplied speaker cables.

To obtain the best possible surround sound, adjust the speaker parameters (volume, distance, etc.).

Notes:

- Be sure to match the speaker cable to the appropriate terminal on the components: + to + and – to –. If the cables are reversed, the sound will be distorted and will lack base.
- If you use front speakers with low maximum input rating, adjust the volume carefully to avoid excessive output on the speakers.

Caution:

- The left and right speakers can be installed on a wall.
- When installing the speakers on a wall, be sure to have the speakers installed by qualified personnel.
- DO NOT install the speakers on the wall by yourself to avoid unexpected damage from them falling off the wall due to incorrect installation or weakness in wall structure.
- Care must be taken in selecting a location for speaker installation on a wall. Injury to personnel or damage to devices may result if the installed speakers interfere with daily activities.

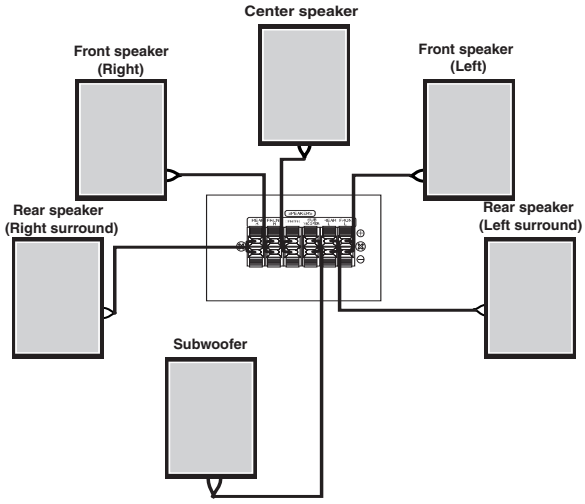

Assembling the Speakers

The speakers are detached from the speaker stands.

Attach the speakers to the speaker stands by rotating the screw (supplied).

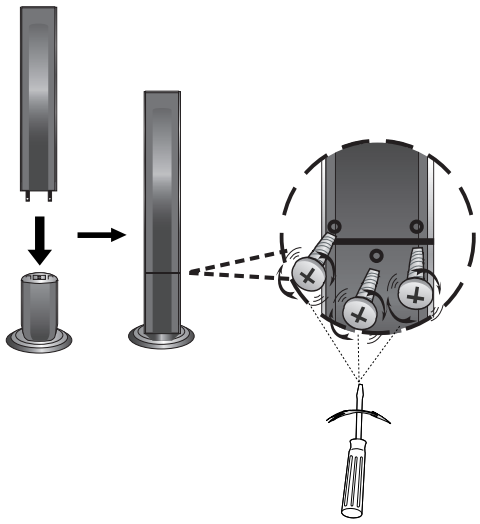

Displaying Disc Information on-screen

You can display various information about the disc loaded on-screen.

1. Press DISPLAY to show various playback information.
   The displayed items differ depending on the disc type or playing status.



2. You can select an item by pressing ▲ / ▼ and change or select the setting by pressing ◄ / ►.
   - Title – Current title number/ total number of titles.
   - Chapter – Current chapter number/total number of chapters.
   - Time – Elapsed playing time.
   - Audio – Selected audio language or channel.
   - Subtitle – Selected subtitle.
   - Angle – Selected angle/total number of angles.
   - Sound – Selected sound mode.

Note:
If any button is not pressed for a few seconds, the on-screen display disappears.

Initial Settings

By using the Setup menu, you can make various adjustments to items such as picture and sound. You can also set a language for the subtitles and the Setup menu, among other things. For details on each Setup menu item, see pages 11 to 15.

OSD Initial language settings:

When the POWER is turned on for the first time, the unit need to set the menu language. Follow the descriptions below after the display connections. After OSD Initial language setting, to set Area code (see page 14)



1. Press POWER to turn the unit on. The language setup menu will appear on the screen.
2. Use ◄ / ► / ▲ / ▼ to select a language then press ENTER. The confirm menu will appear.
3. Use ◄ / ► to select the [Enter] then press ENTER to finish the language setup.

To display and exit the Menu:

Press SETUP to display the menu. A second press of SETUP will take you back to initial screen.

To go to the next level:

Press ► on the remote control.

To go back to the previous level:

Press ◄ on the remote control.

About help menu

Menu	Buttons	Operation
▲ / ▼ Move	▲ / ▼	Moving to another menu
◄ Prev.	◄	Moving to previous level
► Select	►	Moving to next level or selecting menu
↶	RETURN	5.1 Speaker Setup menu
⊙	ENTER	To confirm menu

General Operation

1. Press SETUP.
   The Setup menu appears.



2. Use ▲ / ▼ to select the desired option then press ► to move to the second level. The screen shows the current setting for the selected item, as well as alternate setting(s).
3. Use ▲ / ▼ to select the second desired option and then press ► to move to the third level.
4. Use ▲ / ▼ to select the desired setting then press ENTER to confirm your selection.
   Some items require additional steps.
5. Press SETUP or PLAY (►) to exit the Setup menu.

LANGUAGE



Menu Language

Select a language for the Setup menu and then on-screen display.

Disc Audio / **Subtitle** / **Menu**

Select the language you prefer for the audio track (disc audio), subtitles, and the disc menu.

Original – Refers to the original language in which the disc was recorded.

Other – To select another language, press numeric buttons and then ENTER to enter the corresponding 4-digit number according to the language code list on the page 25. If you enter the wrong language code, press CLEAR.

DISPLAY



TV Aspect

4:3 – Select when a standard 4:3 TV is connected.

16:9 – Select when a 16:9 wide TV is connected.

Display Mode

The Display Mode setting works only when the TV Aspect mode is set to 4:3.

Letterbox – Displays a wide picture with bands on the upper and lower portions of the screen.

Panscan – Automatically displays the wide picture on the entire screen and cuts off the portions that do not fit. (If the disc/file is not compatible with Pan Scan, the picture is displayed at Letterbox ratio.)

AUDIO

Each DVD disc has a variety of audio output options. Set the player's AUDIO options according to the type of audio system you use.

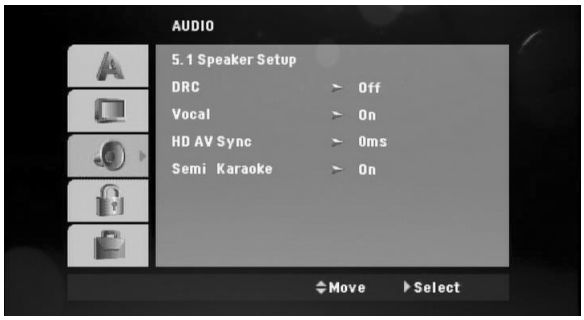

Dynamic Range Control (DRC)

With the DVD*1 format, you can hear a program's soundtrack in the most accurate and realistic presentation, thanks to digital audio technology. However, you may wish to compress the dynamic range of the audio output (the difference between the loudest sounds and the quietest ones). Then, you may listen to a movie at a lower volume without losing clarity of sound. Set DRC to On for this effect.
*1: Dolby Digital only

Vocal

Set Vocal to On only when a multi-channel karaoke DVD is playing. The karaoke channels on the disc will mix into normal stereo sound.

HD AV Sync

When using Digital TV.

Sometimes AV signal could not be transmitted simultaneously because of later transmission of video signal compared to audio signal.

Because it takes some time to convert analogue video signal to digital one in the Digital TV.

And It means that you may not enjoy picture on the screen and sound from speaker at the same time even though it is one scene.

In the HD AV Sync menu, you could adjust delay time to audio signal for simultaneous AV signal transmission

- Delay time could be set up with 10msec unit. (0 ~ 300ms)
- Delay time is different according to each TV Brand. So you need to adjust optimal delay time complying with your TV.

Semi Karaoke

When a chapter / title / track is fully finished ,this function shows the score in the screen with a fanfare sound. Available discs for the Semi Karaoke function: DVD discs / DVD Karaoke Discs with more than 2 tracks

On: When you finished singing a score will appear on the screen.

Off: Fanfare and score do not appears on the screen.

- DVD ,DVD Karaoke with more than 2 tracks
- This function operate on the DVD/CD mode.
- The Semi Karaoke function is available only when a microphone is connected.
- In case that a fanfare or score appears when a chapter of a movie file is changed during playback, set the Semi Karaoke to Off at the setup menu or disconnect the microphone.

5.1 Speaker Setup

Make the following settings for the built-in 5.1 channel surround decoder.

1. Press ENTER, and the 5.1 Speaker Setup menu appears.

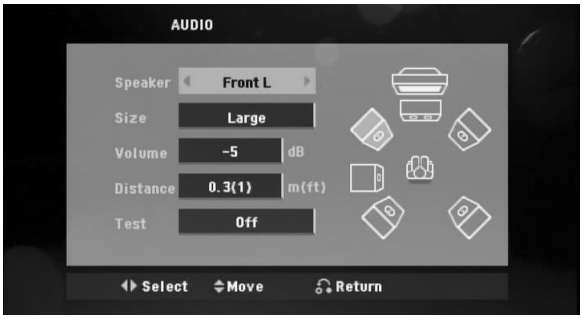

2. Use ◄ / ► to select the desired speaker.
3. Adjust options using ▲ / ▼ / ◄ / ► buttons.
4. Press ENTER to confirm your selection. Returns to the previous menu.

Speaker selection

Select a speaker that you want to adjust. [Front speaker (Front L), Front speaker (Front R), Center Speaker (Center), Subwoofer (SubWoofer), Rear speaker (Rear L), Rear speaker (Rear R)]

Note:

Certain speaker settings are prohibited by the Dolby Digital licensing agreement.

5.1 Speaker Setup

Size

Since the speaker settings are fixed, you cannot change the settings.

Volume

Press ◄ / ► to adjust the output level of the selected speaker. (-5dB ~ 5dB)

Distance

After you connected speakers to your DVD Receiver, set the Distance between the speakers and your listening point if the distance of Center or Rear speakers is bigger than the distance of Front speakers. This allows the sound from each speaker to reach the listener at the same time.
Press ◄ / ► to adjust the Distance of the selected speaker. This distance is equivalent to a difference of the distance between Center or Rear speaker and Front speakers.

Test

Press ◄ / ► to test the signals of each speaker. Adjust the volume to match the volume of test signals memorized in the system.
Front Left (Front L) → Center→ Front Right (Front R) → Rear Right (Rear R) → Rear Left (Rear L) → SubWoofer

LOCK (Parental Control)

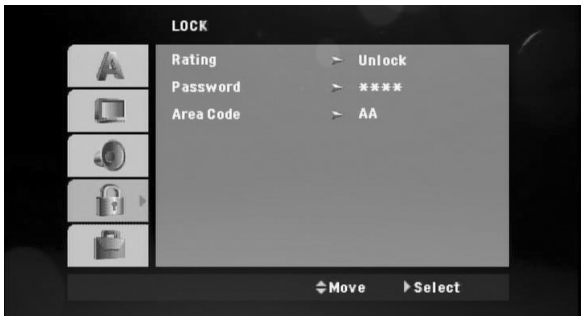

Initial Setting the Area Code:

See the Area Codes on page 25.

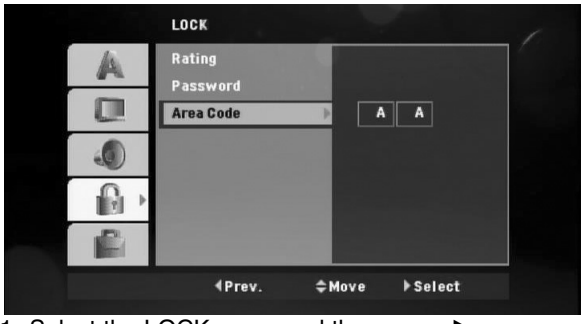

1. Select the LOCK menu and then press ►.
2. To access the LOCK options, you must input the password you have created. Input a password and press ENTER. Enter it again and press ENTER to verify. If you make a mistake before pressing ENTER, press CLEAR.
3. Select the first character using ▲ / ▼ buttons.
4. Press ► and select the second character using ▲ / ▼ buttons.
5. Press ENTER to confirm your Area code selection.

Rating

Blocks playback of rated DVDs based on their contents. Not all discs are rated.

1. Select “Rating” on the LOCK menu then press ►.
2. Input a password and press ENTER.
3. Select a rating from 1 to 8 using the ▲ / ▼ buttons.
   Rating 1-8: Rating one (1) has the most restrictions and rating eight (8) is the least restrictive.
   Unlock: If you select unlock, parental control is not active and the disc plays in full.
4. Press ENTER to confirm your rating selection, then press SETUP to exit the menu.

Password

You can enter or change password.

1. Select Password on the LOCK menu and then press ►.
2. Follow the step 2 as shown above (Rating). To change the password, press ENTER when the “Change” option is highlighted. Input a password and press ENTER. Enter it again and press ENTER to verify.
3. Press SETUP to exit the menu.

If you forget your password

If you forget your password, you can clear it using the following steps:

1. Press SETUP to display the Setup menu.
2. Select the LOCK menu.
3. Input the 6-digit number “210499” and press ENTER. The password is cleared.

Area Code

Enter the code of the area whose standards were used to rate the DVD video disc, based on the list on page 25.

1. Select “Area Code” on the LOCK menu then press ►.
2. Follow the step 2 as shown previous paragraph (Rating).
3. Select the first character using ▲ / ▼ buttons.
4. Press ENTER and select the second character using ▲ / ▼ buttons.
5. Press ENTER to confirm your Area code selection.

OTHERS



DivX(R) VOD

We provide you with the DivX® VOD (Video On Demand) registration code that allows you to rent and purchase videos using the DivX® VOD service.
For more information, visit www.divx.com/vod.
Press **ENTER** when [DivX(R) VOD] is highlighted and you can view the registration code of the unit.

Note:

All the downloaded videos from DivX® VOD can only be played back on this unit.

Operation

General features

Buttons	Operations	Discs
⏏ (OPEN / CLOSE)	Opens or closes the disc tray.	ALL
❚❚ (PAUSE)	During playback, press ❚❚ to pause playback.	ALL
	Press ❚❚ repeatedly to play Frame-by-Frame.	DVD VCD DivX
⏮ / ⏭	During playback, press ⏮ or ⏭ to go to the next chapter/track or to return to the beginning of the current chapter/track. Press ⏮ twice briefly to step back to the previous chapter/track.	ALL
◀◀ / ▶▶	During playback, press ◀◀ or ▶▶ repeatedly to select the required scan speed. DVD : ◀◀, ◀◀◀, ◀◀◀◀, ◀◀◀◀◀ or ▶▶, ▶▶▶, ▶▶▶▶, ▶▶▶▶▶ DivX disc, Video CD : ◀◀, ◀◀◀, ◀◀◀◀, ◀◀◀◀◀ or ▶▶, ▶▶▶, ▶▶▶▶, ▶▶▶▶▶ WMA/MP3, Audio CD : ◀◀ (X2, X4, X8) or ▶▶ (X2, X4, X8)	DVD VCD DivX ACD MP3 WMA
REPEAT	During playback, press REPEAT repeatedly to select a desired repeat mode. DVD Video discs: Chapter/Title/Off Video CD, Audio CD, DivX/MP3/WMA discs: Track/All/Off	ALL
TOP MENU	If the current DVD title has a menu, the title menu appears on the screen. Otherwise, the disc menu may appears.	DVD
MENU	The disc menu appears on the screen.	DVD
(SUBTITLE)	During playback, press SUBTITLE repeatedly to select a desired subtitle language.	DVD DivX
SLOW	In the pause mode, press SLOW (◀◀ or ▶▶) to select the required speed. DVD : ◀❚❚ (1/2, 1/4, 1/8, 1/16) or ❚▶ (1/2, 1/4, 1/8, 1/16) Video CD : ❚▶ (1/2, 1/4, 1/8, 1/16)	DVD VCD

Additional features

Time Search DVD

To start playing at any chosen time on the disc:

1. Press DISPLAY during playback.
2. Press ▲ / ▼ to select the time clock icon and "--:--:--" appears.
3. Input the required start time in hours, minutes, and seconds from left to right. If you enter the wrong numbers, press CLEAR to remove the numbers you entered. Then input the correct numbers.
4. Press ENTER to confirm. Playback starts from the selected time.

1.5 times speed playback
DVD

You can play at 1.5 times speed.
The 1.5 speed allows you to watch the pictures and listen to the sound quicker than playing at a normal speed on the disc.

1. During playback, press PLAY(►) to play at 1.5 times speed. "►X1.5" appears on the screen.
2. Press PLAY(►) again to exit.

Screen Saver

The screen saver appears when you leave the unit in Stop mode for about five minutes. To cancel the Screen Saver, press any button and then operate the unit.

Last Scene Memory DVD

This receiver memorizes the last scene from the last disc that is viewed. The last scene remains in the memory even if you remove the disc from the receiver or switch off the receiver. If you load a disc that has the scene memorized, the scene is automatically recalled.

Note:
This receiver does not memorize the scene of a disc if you switch off the receiver before commencing to play the disc.

Mixed disc – MP3/WMA and JPEG

When playing a disc contained with MP3/WMA and JPEG files together, you can select which menu of files you would like to play by pressing MENU.

System Select

You must select the an appropriate system mode for your TV system. If NO DISC appears in the display window, press and hold PAUSE (❚❚) remote control for more than 5 seconds to be able to select a system (PAL, NTSC).

- When the selected system is not compatible with the system of your TV, normal colour picture may not be displayed.

NTSC: Select when DVD/CD Receiver is connected with NTSC-TV.

PAL: Select when DVD/CD Receiver is connected with PAL-TV.

To adjust MIC Volume
Press MIC VOL.(-/+) on the remote control to increase the volume, or MIC VOL.(-/+) to decrease it.

To adjust ECHO Volume

You can give an echo effect to the sound from the microphones.
Press the ECHO VOL.(-/+) on the remote control to increase the echo volume or decrease it.

Playing an Audio CD or MP3/WMA file

This unit can play Audio CDs or MP3/WMA files.

MP3/ WMA/ Audio CD
Once you insert an MP3/WMA files recording media or Audio CD a menu appears on the TV screen.
Press ▲ / ▼ to select a track/file and then press PLAY or ENTER, and playback starts. You can use variable playback functions. Refer to the page 16.

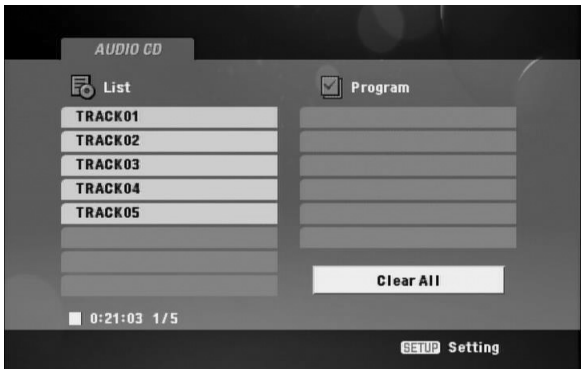



ID3 TAG
When playing a file containing information such as track titles, you can see the information by pressing DISPLAY.

MP3 / WMA disc compatibility with this player is limited as follows:

- Sampling frequency: within 32 - 48 kHz (MP3), within 32 - 48kHz (WMA)
- Bit rate: within 32 - 320kbps (MP3), 40 - 192kbps (WMA)
- The DVD/CD Receiver cannot read an MP3/WMA file that has a file extension other than ".mp3" / ".wma".
- CD-R physical format should be ISO 9660
- If you record MP3 / WMA files using software that cannot create a file system (eg. Direct-CD) it is impossible to playback MP3 / WMA files.We recommend that you use Easy-CD Creator, which creates an ISO 9660 file system.
- File names should have a maximum of 8 letters and must incorporate an .mp3 or .wma extension.
- They should not contain special letters such as / ? * : " < > l etc.
- The total number of files on the disc should be less than 999.

This DVD/CD Receiver requires discs and recordings to meet certain technical standards in order to achieve optimal playback quality. Pre-recorded DVDs are automatically set to these standards. There are many different types of recordable disc formats (including CD-R containing MP3 or WMA files) and these require certain pre-existing conditions (see above) to ensure compatible playback.

Customers should note that permission is required in order to download MP3 / WMA files and music from the Internet. Our company has no right to grant such permission. Permission should always be sought from the copyright owner.

Programmed Playback

The program function enables you to store your Favourite tracks from any disc in the receiver memory. A program can contain 30 tracks.

1. Insert a disc.
   Audio CD and MP3/WMA Discs:
2. To add a music(s) on the program list, press **PROG**/**MEMO** to enter the program edit mode (E mark appears on the menu).
3. Select a desired music on the [List] by using the ▲ / ▼ then press **ENTER** to add the music to the program list.
4. Select music from the program list then press **ENTER** to start programmed playback.

Repeat Programmed Tracks

1. Press REPEAT when playing a disc. The repeat icon appears.
2. Press REPEAT to select a desired repeat mode.
   • Track: repeats the current track
   • All: repeats all the tracks on programmed list.
   • Off (No display): does not play repeatedly.

Erasing a Track from "Program" List

1. Use ▲▼ to select the track that you wish to erase from the Program list.
2. Press CLEAR in program edit mode.

Erasing the Complete Program List

Use ▲ / ▼ to select [Clear All] then press **ENTER** in program edit mode.

Note:

The programs are also cleared when the disc is removed, the unit is switched to power off or the function is switched to others.

Viewing a JPEG file

This unit can play discs with JPEG files.
Before playing JPEG recordings, read the notes on JPEG Recordings on the right.

1. Insert a disc and close the tray.
   The PHOTO menu appears on the TV screen.

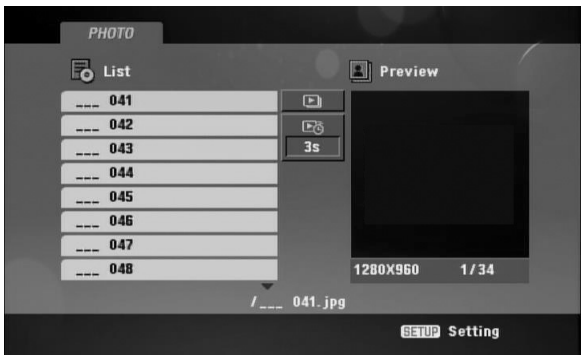

2. Press ▲ / ▼ to select a folder, and then press ENTER. A list of files in the folder appears.
   If you are in a file list and want to return to the previous Folder list, use the ▲ / ▼ buttons on the remote to highlight .. and press ENTER.
3. If you want to view a particular file, press ▲ / ▼ to highlight a file and press ENTER or PLAY. While viewing a file, you can press STOP to move to the previous menu (JPEG menu).

Tips:

There are three Slide Speed options : 3s, 5s, 8s
Use ▲ /▼ /◄ /► to highlight the Speed. Then, use ◄ / ► to select the option you want to use and then press ENTER.

Note:

Depending on the size and resolution of JPEG files, it may take longer for slide show to be set.

Slide Show

1. Highlight the file (not folder) which you like beginning to slide show.
2. Select the slide speed. (Refer to the tips this page)
3. Use ▲ /▼ /◄ /► to highlight the (Slide Show) then press ENTER.

Note:

- The sequence of slide show is from top to down, cannot be reverse.
- Slide show cannot repeat automatically, you could start the slide show again manually.
- During slide show, a help menu appears in the lower part of the screen. To hide this help menu, press ENTER or DISPLAY. Then press this button again, a help menu appears again.
- To close JPEG slide show, press RETURN or STOP (■).

Still Picture

1. Press PAUSE **(❚❚)** during the slide show. The DVD/CD Receiver will now go into the PAUSE **(❚❚)** mode.
2. To return to the slide show, press PLAY or press PAUSE **(❚❚)** again.

Moving to another File

Press SKIP (**I◄◄** or **►►I**) once during viewing a picture to advance to the next or previous file.

Rotating the picture

Press ▲ / ▼ during showing a picture to rotate the picture clockwise or counter-clockwise.

Listening to music during slide show

You can listen to music during slide show, if the disc contain music and photo files together. Use ▲ /▼ /◄ /► to highlight ( ) icon then press **ENTER** to start slide show. This function is available only in disc.

About help menu

Menu	Buttons	Operation
▲↷90˚ / ▼↶90˚	▲ / ▼	Rotating the picture
◄ Prev./ ► Next	◄ / ►	Moving to another file
↩	RETURN	Closes the slide show
⊙	ENTER	To hide the help menu

JPEG disc compatibility with this player is limited as follows:

- Depending upon the size and the number of JPEG files, it could take a long time for the DVD/CD Receiver to read the disc's contents. If you don't see an on-screen display after several minutes, some of the files may be too large — reduce the resolution of the JPEG files to less than 2M pixels as 2760 x 2048 pixels and burn another disc.
- The total number of files and folders on the disc should be less than 999.
- Some discs may not operate due to a different recording format or the condition of disc.
- Ensure that all the selected files have the ".jpg" extensions when copying into the CD layout.
- If the files have ".jpe" or ".jpeg" extensions, please rename them as ".jpg" file.
- File names without ".jpg" extension will not be able to be read by this DVD/CD Receiver. Even though the files are shown as JPEG image files in Windows Explorer.

Playing a DivX Movie file

Using this DVD/CD Receiver you can play DivX disc.

1. Insert a disc and close the tray. The MOVIE menu appears on the TV screen.



2. Press ▲ / ▼ to select a folder and then press ENTER. A list of files in the folder appears. If you are in a file list and want to return to the Folder list, use the ▲ / ▼ buttons on the remote to highlight and press ENTER.

3. If you want to view a particular file, press ▲ / ▼ to highlight a file and press ENTER or PLAY.

4. Press STOP to exit.

Notice for displaying the Divx subtitle

If the subtitle does not display properly during playback, press and hold SUBTITLE for about 3 seconds then press SUBTITLE to select another language code until the subtitle is displayed properly

Notes:

- Be sure to select “SUBTITLE ON” mode by pressing the subtitle file every time before playing a DivX file .
- When the subtile has more than two languages in the file, original subtile is only available.

DivX disc compatibility with this player is limited as follows:

- Available resolution size of the DivX file is under 800x600 (W x H) pixel.
- The file name of the DivX subtitle is available by 45 characters.
- If there is impossible code to express in the DivX file, it may be displayed as " _ " mark on the display.
- **If the number of the screen frame is over 30 per 1 second, this unit may not operate normally.**
- **If the video and audio structure of recorded files are not interleaved, either video or audio is outputted.**

Playable DivX file

• ".avi ", ".mpg ", ".mpeg ", ".divx"

Playable Subtitle format

• SubRip(*.srt/*.txt)
SAMI(*.smi)
SubStation Alpha(*.ssa/*.txt)
MicroDVD(*.sub/*.txt)
SubViewer 2.0(*.sub/*.txt)
VobSub(*.sub)

Playable Codec format

• "DIVX3.xx ", "DIVX4.xx ", "DIVX5.xx ", "MP4V3 ", "3IVX ".

Playable Audio format

"AC3 ", "DTS ", "PCM ", "MP3 ", "WMA ".
- Sampling frequency: within 32 - 48 kHz (MP3), within 32 - 48kHz (WMA)
- Bit rate: within 32 - 320kbps (MP3), 40 - 192kbps (WMA)

Presetting the Radio Stations

You can preset 50 stations for FM and AM (MW). Before tuning, make sure that you have turned down the volume.

1. Press FUNCTION on the remote control until FM or AM (MW) appears in the display window.
2. And then every time you press FUNCTION, FM and AM (MW) changes alternately.
3. Press and hold TUNING.(-/+) for about two seconds until the frequency indication starts to change, then release.
   Scanning stops when the DVD/CD Receiver tunes in a station.
4. Press PROG./MEMO. on the remote control.
   A preset number will flash in the display window.
5. Press PRESET (-/+) on the remote control to select the preset number you want.
6. Press PROG./MEMO. on the remote control again.
   The station is stored.
7. Repeat steps 3 to 6 to store other stations.

To tune in a station with a weak signal

Press TUNING.(-/+) repeatedly in step 3 to tune in the station manually.

To clear all the stored stations

Press and hold PROG./MEMO. for about two seconds and “ERASE ALL” is appeared in the display window and then press PROG./MEMO. again, the stations are cleared.

- If you have accidentally entered into the "ERASE ALL" mode and you do not wish to clear the memory, do not press any key. After a few seconds, "ERASE ALL" will go off by itself and change to normal mode.

Note:

If all stations have already been entered, the FULL message will appear in the display window for a moment and then a preset number will flash.
To change the preset number, follow the steps 5-6 as above.

Listening to the Radio

Preset radio stations in the DVD/CD Receiver’s memory first (see “Presetting radio stations” on the left).

1. Press FUNCTION until FM or AM (MW) appears in the display window.
   The last received station is tuned in.
2. Press PRESET (-/+) repeatedly on the remote control to select the preset station you want.
   Each time you press the button, the DVD/CD Receiver tunes in one preset station at a time.
3. Adjust the volume by rotating VOLUME on the front panel or by pressing VOLUME + or - on the remote control repeatedly.

To turn off the radio

Press POWER to turn the DVD/CD Receiver off or select another function mode.

To listen to non-preset radio stations

- Use manual or automatic tuning in the step 2.
- For manual tuning, press TUNING.(-/+) repeatedly.
- For automatic tuning, press and hold TUNING.(-/+) for about two seconds on the front panel.

To select a preset radio station directly

You can use the number buttons on the remote control to select a preset radio station directly.
For example, to listen to the preset station 4, press 4 on the remote control. To listen to the preset station 19, press 1 and then 9 (within 3 seconds).

For your reference

- **If an FM program is noisy**
  To appear “STEREO”, press FM MODE.. Then press again this button to make “MONO” appear in the display window. There will be no stereo effect, but the reception will improve. Press the button again to restore the stereo effect.
- **To improve reception**
  Reorient the supplied antennas.

Sleep Timer Setting

Press **SLEEP**/**DIMMER** one or more times to select delay time between 10 and 180 minutes, after the player will turn off.
To check the remaining time, press **SLEEP**/**DIMMER**
To cancel the sleep function, press **SLEEP**/**DIMMER** repeatedly until “SLEEP 10” appears, and then press **SLEEP**/**DIMMER** once again while “SLEEP 10” is displayed.

Note:

You can check the remaining time before the DVD/CD Receiver turns off.
Press SLEEP/DIMMER. The remaining time appears in the display window.

Dimmer

Press **SLEEP**/**DIMMER** once. The LED (Light-emitting diode) of front panel is turned off and the display window will be darken by half. To cancel it, press **SLEEP**/**DIMMER** repeatedly until dim off.

Muting

Press MUTING to mute your unit.

You can mute your unit in order, for example, to answer the telephone, the “MUTING” indicator flickers in the display window.

Note:

This muting doesn’t affect the audio output to HDMI; it only mutes the output of speakers connected to the unit.

Setting the disc ejection lock

You can lock the disc tray to prevent the disc form being ejected.

When the main unit is turned off, hold down the STOP key at the front panel for 5 seconds
If you attempt to open the disc tray by pressing OPEN/CLOSE key, the disc tray does not open and “LOCKED” appears in the display window.
To cancel the disc ejection lock, hold down the STOP key at the front panel for 5 seconds again when the main unit is turned off.
“UNLOCKED” is displayed in the display window.

Note:

Before the main unit is turned off, DVD/CD function should be selected.

Enjoying audio form an external source

You can enjoy audio form an external source through your unit.
Press INPUT repeatedly to select the desired input source. - AUX, AUX OPT, AUDIO IN, USB

Setting the surround mode

This system has a number of pre-set surround sound fields. You can select a desired sound mode by using **SOURROUND**. You can change the **SOURROUND** using ◄ /► arrow key while the **SOURROUND** information is displayed on.
The displayed items for the Equalizer may be different depending on sound sources and effects.

[[PLII MOVIE/ PLII MUSIC/ PLII MTRX(matrix)] Dolby Pro Logic II enables you to play stereo source on 5.1-channel.
[Bypass] You can enjoy the sound without equalizer effect.

Notes:

- In some of surround modes, some speakers maybe no sound or low sound, it depends on the mode of surround and the source of audio, it is not defective.
- You may need resetting the surround mode, after switch the input, sometimes even after the sound track changed.

Reference

Language Codes

Use this list to input your desired language for the following initial settings:
Disc Audio, Disc Subtitle, Disc Menu.

Language	Code	Language	Code	Language	Code	Language	Code
Abkhazian	6566	Fiji	7074	Lingala	7678	Singhalese	8373
Afar	6565	Finnish	7073	Lithuanian	7684	Slovak	8375
Afrikaans	6570	French	7082	Macedonian	7775	Slovenian	8376
Albanian	8381	Frisian	7089	Malagasy	7771	Somali	8379
Ameharic	6577	Galician	7176	Malay	7783	Spanish	6983
Arabic	6582	Georgian	7565	Malayalam	7776	Sudanese	8385
Armenian	7289	German	6869	Maltese	7784	Swahili	8387
Assamese	6583	Greek	6976	Maori	7773	Swedish	8386
Aymara	6588	Greenlandic	7576	Marathi	7782	Tagalog	8476
Azerbaijani	6590	Guarani	7178	Moldavian	7779	Tajik	8471
Bashkir	6665	Gujarati	7185	Mongolian	7778	Tamil	8465
Basque	6985	Hausa	7265	Nauru	7865	Tatar	8484
Bengali; Bangla	6678	Hebrew	7387	Nepali	7869	Telugu	8469
Bhutani	6890	Hindi	7273	Norwegian	7879	Thai	8472
Bihari	6672	Hungarian	7285	Oriya	7982	Tibetan	6679
Breton	6682	Icelandic	7383	Panjabi	8065	Tigrinya	8473
Bulgarian	6671	Indonesian	7378	Pashto, Pushto	8083	Tonga	8479
Burmese	7789	Interlingua	7365	Persian	7065	Turkish	8482
Byelorussian	6669	Irish	7165	Polish	8076	Turkmen	8475
Cambodian	7577	Italian	7384	Portuguese	8084	Twi	8487
Catalan	6765	Japanese	7465	Quechua	8185	Ukrainian	8575
Chinese	9072	Javanese	7487	Rhaeto-Romance	8277	Urdu	8582
Corsican	6779	Kannada	7578	Rumanian	8279	Uzbek	8590
Croatian	7282	Kashmiri	7583	Russian	8285	Vietnamese	8673
Czech	6783	Kazakh	7575	Samoan	8377	Volapük	8679
Danish	6865	Kirghiz	7589	Sanskrit	8365	Welsh	6789
Dutch	7876	Korean	7579	Scots Gaelic	7168	Wolof	8779
English	6978	Kurdish	7585	Serbian	8382	Xhosa	8872
Esperanto	6979	Laothian	7679	Serbo-Croatian	8372	Yiddish	7473
Estonian	6984	Latin	7665	Shona	8378	Yoruba	8979
Faroese	7079	Latvian, Lettish	7686	Sindhi	8368	Zulu	9085

Area Codes

Choose a area code from this list.

Area	Code	Area	Code	Area	Code	Area	Code
Afghanistan	AF	Ethiopia	ET	Malaysia	MY	Saudi Arabia	SA
Argentina	AR	Fiji	FJ	Maldives	MV	Senegal	SN
Australia	AU	Finland	FI	Mexico	MX	Singapore	SG
Austria	AT	France	FR	Monaco	MC	Slovak Republic	SK
Belgium	BE	Germany	DE	Mongolia	MN	Slovenia	SI
Bhutan	BT	Great Britain	GB	Morocco	MA	South Africa	ZA
Bolivia	BO	Greece	GR	Nepal	NP	South Korea	KR
Brazil	BR	Greenland	GL	Netherlands	NL	Spain	ES
Cambodia	KH	Heard and McDonald Islands	HM	Netherlands Antilles	AN	Sri Lanka	LK
Canada	CA	Hong Kong	HK	New Zealand	NZ	Sweden	SE
Chile	CL	Hungary	HU	Nigeria	NG	Switzerland	CH
China	CN	India	IN	Norway	NO	Taiwan	TW
Colombia	CO	Indonesia	ID	Oman	OM	Thailand	TH
Congo	CG	Israel	IL	Pakistan	PK	Turkey	TR
Costa Rica	CR	Italy	IT	Panama	PA	Uganda	UG
Croatia	HR	Jamaica	JM	Paraguay	PY	Ukraine	UA
Czech Republic	CZ	Japan	JP	Philippines	PH	United States	US
Denmark	DK	Kenya	KE	Poland	PL	Uruguay	UY
Ecuador	EC	Kuwait	KW	Portugal	PT	Uzbekistan	UZ
Egypt	EG	Libya	LY	Romania	RO	Vietnam	VN
El Salvador	SV	Luxembourg	LU	Russian Federation	RU	Zimbabwe	ZW

Troubleshooting

Check the following guide for the possible cause of a problem before contacting service.

Symptom	Cause	Correction
No power.	• The power cord is disconnected.	• Plug the power cord securely into the wall outlet.
The power is on, but the DVD/CD Receiver does not work.	• No disc is inserted.	• Insert a disc. (Check that the DVD or, audio CD indicator in the DVD display is lit.)
No picture.	• The TV is not set to receive DVD signal output.	• Select the appropriate video input mode on the TV so the picture from the DVD/CD Receiver appears on the TV screen.
	• The video cable is not connected securely.	• Connect the video cable into the jacks securely.
	• The connected TV power is turned off.	• Turn on the TV.
There is no sound or only a very low-level sound is heard.	• The equipment connected with the audio cable is not set to receive DVD signal output.	• Select the correct input mode of the audio receiver so you can hear the sound from the DVD/CD Receiver.
	• The audio cables are not connected securely.	• Connect the audio cable into the jacks securely.
	• The power of the equipment connected with the audio cable is turned off.	• Turn on the equipment connected with the audio cable.
	• The audio connecting cable is damaged.	• Replace it with new one.
The playback picture is poor.	• The disc is dirty.	• Clean the disc.
The DVD/CD Receiver does not start playback.	• No disc is inserted.	• Insert a disc. (Check that the DVD, or audio CD indicator in the DVD display is lit.)
	• An unplayable disc is inserted.	• Insert a playable disc. (Check the disc type, colour system and Regional code.)
	• The disc is placed upside down.	• Place the disc with the playback side down.
	• The disc is not placed within the guide.	• Place the disc on the disc tray correctly inside the guide.
	• The disc is dirty.	• Clean the disc.
	• A menu is on the TV screen.	• Press the SETUP button to turn off the menu screen.
	• The Rating level is set.	• Cancel the Rating function or change the rating level.
Loud hum or noise is heard.	• The disc is dirty.	• Clean the disc.
	• The speakers and components are connected poorly.	• Connect the speakers and components securely.
	• The DVD/CD Receiver is located too close to the TV.	• Move your TV away from the audio components.

Symptom	Cause	Correction
Radio stations cannot be tuned in.	• The antenna is positioned or connected poorly.	• Connect the antenna securely.
		• Adjust the antennas and connect an external antenna if necessary.
	• The signal strength of the stations is too weak (when tuning in with automatic tuning).	• Tune in the station manually.
	• No stations have been preset or preset stations have been cleared (when tuning by scanning preset stations).	• Preset the stations (page 24).
The remote control does not work properly.	• The remote control is not pointed at the remote sensor of the DVD/CD Receiver.	• Point the remote control at the remote sensor of the DVD/CD Receiver.
	• The remote control is too far from the DVD/CD Receiver.	• Use the remote control within about 23 ft (7 m).
	• There is an obstacle in the path of the remote control and the DVD/CD Receiver.	• Remove the obstacle.
	• The batteries in the remote control are flat.	• Replace the batteries with new ones.
The front panel display is too dim.	• Nothing is displayed on the front panel display.	• Press DIMMER on the remote control.

Supplied Accessories

FM Antenna x1
AM Antenna x1
Speaker cable x6
Remote control x1
Video RCA cable x1
Batteries x2
Screws x6

Specifications

General	Power supply	110 - 240 V ~ 50/60 Hz	
	Power consumption	130 W	
	Net Weight	3.6 kg	
	External dimensions (W x H x D)	430 x 76 x 317 mm	
	Operating conditions	Temperature: 5°C to 35°C, Operation status: Horizontal	
	Operating humidity	5% to 85%	
	Laser	Semiconductor laser, wavelength 650 nm	
CD/DVD	Video system	PAL/NTSC	
	Frequency response (audio)	140 Hz to 20 kHz ★	
	Signal-to-noise ratio (audio)	More than 75 dB (1 kHz, 20 kHz LPF/A-Filter) ★	
	Dynamic range (audio)	More than 75 dB ★	
	Harmonic distortion (audio)	0.5 % (1 kHz, at 1W position) (20 kHz LPF) ★	
Video	Video output	1.0 V (p-p), 75 Ω, negative sync., RCA jack x 1	
	COMPONENT VIDEO OUT	(Y) 1.0 V (p-p), 75 ohms, negative sync, RCA jack x 1 (P_B)/(P_R) 0.7 V (p-p), 75 ohms, RCA jack x 1	
	HDMI OUT	480i (or 576i)/480p (or 576p)/720p/1080i/1080p	
Tuner **FM**	Tuning Range	87.50 - 108.00 MHz (or 87.5 - 108.0 MHz)	
	Intermediate Frequency	128 kHz	
	Signal-to Noise Ratio	60 dB (Mono) ★	
	Frequency Response	140 - 10,000 Hz ★	
AM	Tuning Range	522 - 1,710 MHz	
	Intermediate Frequency	128 kHz	
Amplifier	Stereo mode	155 W + 155 W (4Ω at 1 kHz, THD 10 %)	
	Surround mode **(* Depending on the sound mode settings and the source, there may be no sound output.)**	Front: 155 W + 155 W (THD 10 %) center*: 155 W Surround*: 155 W + 155 W (4Ω at 1 kHz, THD 10 %) Subwoofer*: 225 W (3Ω at 70 Hz, THD 10 %)	
	Inputs	AUDIO IN, OPTICAL IN, AUX IN, USB	
	Outputs	MONITOR OUT, HDMI OUT, COMPONENT VIDEO OUT	
Speakers		Front Speaker	Center speaker
	Type	2 Way 3 Speaker	1 Way 1 Speaker
	Impedance	4 Ω	4 Ω
	Frequency Response	80 - 18000 Hz	120 -18000 Hz
	Sound Pressure Level	83 dB/W (1m)	83 dB/W (1m)
	Rated Input Power	155 W	155 W
	Max. Input Power	310 W	310 W
	Net Dimensions (W x H x D)	280 x 1201 x 280 mm	301 x 118 x 83 mm
	Net Weight	4.4 kg	0.9 kg
		Rear Speaker	Passive Subwoofer
	Type	1 Way 1 Speaker	1 Way 1 Speaker
	Impedance	4 Ω	3 Ω
	Frequency Response	120 - 18000 Hz	40 - 1500 Hz
	Sound Pressure Level	83 dB/W (1m)	82 dB/W (1m)
	Rated Input Power	155 W	225 W
	Max. Input Power	310 W	450 W
	Net Dimensions (W x H x D)	113 x 209 x 83 mm	236 x 435 x 391 mm
	Net Weight	0.78 kg	5.7 kg
USB	Output power	DC 5V ⎓ 500mA	

Items with ★ are measured at Front Speaker Terminals in STEREO mode

⁕ Designs and specifications are subject to change without notice.

TH-G61

JVC

EN

© 2009 Victor Company of Japan, Limited

0609SKMLGEEGL