FOR LG CUSTOMER SERVICE:
1-888-LGCANADA
Or visit us on the Web at: **http://www.lg.ca**

EL SERVICIO DE ATENCIÒN AL CLIENTE DE LG:
1-888-LGCANADA
Ou visitez notre site Web à l'adresse:
http://www.lg.ca

POUR SERVICE À LA CLIENTÈLE DE LG:
1-888-LGCANADA
O visítenos en la Web en: **http://www.lg.ca**

FRENCH DOOR REFRIGERATOR

USER'S GUIDE & INSTALLATION INSTRUCTIONS

Please read this guide thoroughly before operating and keep it handy for reference at all times.

RÉFRIGÉRATEUR À PORTES FRANÇAISES

GUIDE D'UTILISATION ET INSTRUCTIONS D'INSTALLATION

Veuillez lire ce guide attentivement avant la mise en service de l'appareil et gardez-le à portée de main pour le consulter en cas de besoin.

REFRIGERADOR DE PUERTA FRANCES

GUÍA PARA EL USO E INSTRUCCIONES DE INSTALACIÓN

Lea detenidamente estas instrucciones antes utilizar el frigorífico y guárdelas como referencia para el futuro.

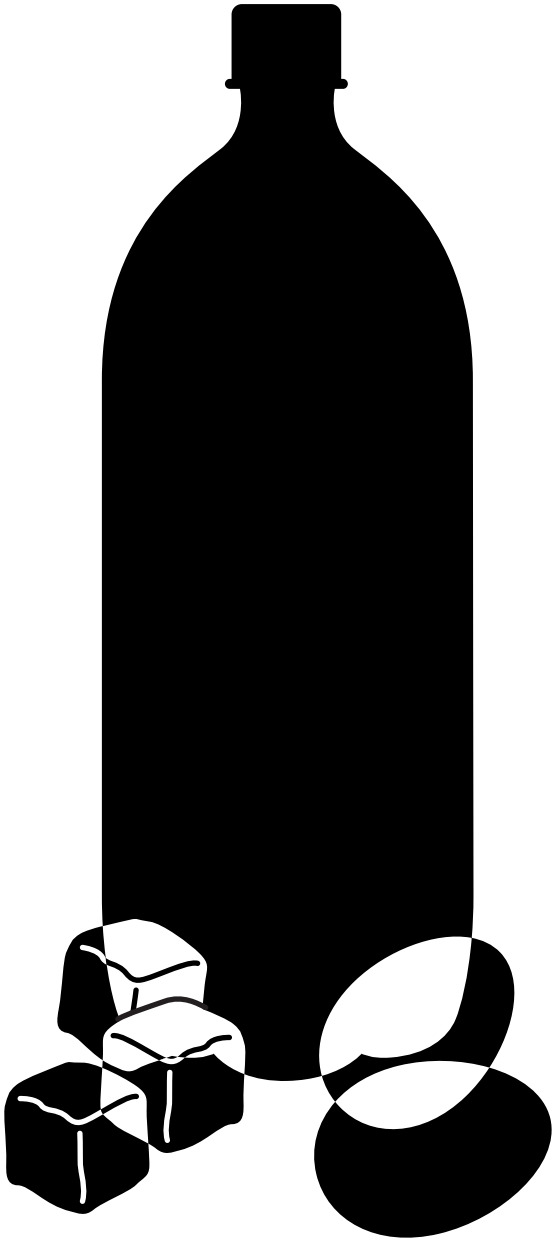

Models/Modelos/Modèles

LMX25981**, LMX21981**

P/No. MFL37933535

INTRODUCTION

IMPORTANT SAFETY INFORMATION

Basic Safety Precautions 3
CFC Disposal 4
How to Connect Electricity 5

PARTS AND FEATURES

Special Features 6
Key Parts and Components 7

INSTALLATION

Choose the Proper Location 8
Clearances 8
Flooring 9
Handle Removal.....9
Door and Drawer Removal.....10
Connecting the Water Supply 18
Connecting the Water Lines.....18
Leveling the Refrigerator Doors 20
Starting.....21

HOW TO USE

Control Panel Features 22
The LED Display 23
Adjusting the Temperatures and Display 24
Operating the Dispenser 25
Setting the Functions 26
In-Door Ice Bin 27
Automatic Icemaker 28
Storing Foods 29
Location of Foods 30
Shelf Height Adjustment 31

CARE AND CLEANING

Removing and Replacing Components 32
Cleaning the Refrigerator 35
General Information 35
Replacing the Water Filter.....36

TROUBLESHOOTING

Before Calling for Service 37

SPECIFICATIONS

Key Dimensions and Specifications 41

WARRANTY

Product Registration Information 42

THANK YOU!

Congratulations on your purchase and welcome to the LG family. Your new LG French Door Refrigerator combines advanced cooling technology with simple operation and high efficiency. Follow the operating and care instructions in this manual and your refrigerator will provide you with many years of reliable service.

BASIC SAFETY PRECAUTIONS

This guide contains many important safety messages. Always read and obey all safety messages.

⚠ This is the safety alert symbol. It alerts you to safety messages that inform you of hazards that can kill or hurt you or others or cause damage to the product. All safety messages will be preceded by the safety alert symbol and the hazard signal word DANGER, WARNING, or CAUTION. These words mean:

⚠DANGER You **might** be killed or seriously injured if you don't follow instructions.

⚠WARNING You **can** be killed or seriously injured if you don't follow instructions.

⚠CAUTION Indicates an imminently hazardous situation which, if not avoided, **may** result in minor or moderate injury, or product damage.

All safety messages will identify the hazard, tell you how to reduce the chance of injury, and tell you what can happen if the instructions are not followed.

⚠WARNING

To reduce the risk of fire, electric shock, or injury to persons when using your product, basic safety precautions should be followed, including the following.

Read all instructions before using this appliance.

- NEVER unplug your refrigerator by pulling on the power cord. Always grip the plug firmly and pull it straight out from the outlet.
- Repair or replace immediately all electric service cords that have become frayed or otherwise damaged. Do not use a cord that shows cracks or abrasion damage along its length or at either the plug or connector end.
- When moving your refrigerator away from the wall, be careful not to roll over or damage the power cord.
- DO NOT store or use gasoline or other flammable vapors and liquids in the vicinity of this or any other appliance.
- Do NOT allow children to climb, stand, sit or hang on doors, drawers or shelves of the refrigerator. They could damage the refrigerator and seriously injure themselves.
- Keep fingers out of pinch point areas; clearances between the doors and cabinet are necessarily small. Be careful closing doors when children are in the area.
- Unplug your refrigerator before cleaning or making any repairs.
  NOTE: Service should be performed by a qualified technician.
- Before replacing a burned-out light bulb, unplug the refrigerator or turn off power at the circuit breaker or fuse box in order to avoid contact with a live wire filament. (A burned-out light bulb may break when being replaced.)
  NOTE: Some models have LED interior lighting and service should be performed by a qualified technician.
  NOTE: Setting either or both controls to the OFF position does not remove power to the light circuit.
- When you are finished, reconnect the refrigerator to the electrical source and reset the control (Thermostat Refrigerator Control, or Freezer Control, or Freezer Control, depending on the model) to the desired setting.
- This refrigerator must be properly installed in accordance with the **Installer Instructions** that were taped to the front of the refrigerator.
- After your refrigerator is in operation, do not touch the cold surfaces in the freezer compartment when hands are damp or wet. Skin may adhere to the extremely cold surfaces.
- In refrigerators with automatic icemakers, avoid contact with the moving parts of the ejector mechanism or with the heating element that releases the cubes. DO NOT place fingers or hands on the automatic icemaking mechanism while the refrigerator is plugged in.
- **Do not modify or extend the power cord length.** It will cause electric shock or fire.

BASIC SAFETY PRECAUTIONS (CONT.)

- DO NOT refreeze frozen foods which have thawed completely. The United States Department of Agriculture in Home and Garden Bulletin No. 69 says:

  …You may safely refreeze frozen foods that have thawed if they still contain ice crystals or if they are still cold—below 40°F (4°C).

  …Thawed ground meats, poultry, or fish that have any off-odor or off-color should not be refrozen and should not be eaten. Thawed ice cream should be discarded. If the odor or color of any food is poor or questionable, dispose of it. The food may be dangerous to eat.

Even partial thawing and refreezing reduces the quality of foods, particularly fruits, vegetables, and prepared foods. The eating quality of red meats is affected less than that of many other foods. Use refrozen foods as soon as possible to save as much of their quality as you can.

⚠DANGER

Risk of Child Entrapment

Discarded or abandoned refrigerators are dangerous, even if they will sit for just a few days. If you are disposing of your old refrigerator, please follow the instructions below to help prevent accidents.

Before you throw away your old refrigerator or freezer:

- Take off the doors.
- Leave the shelves in place so that children may not easily climb inside.

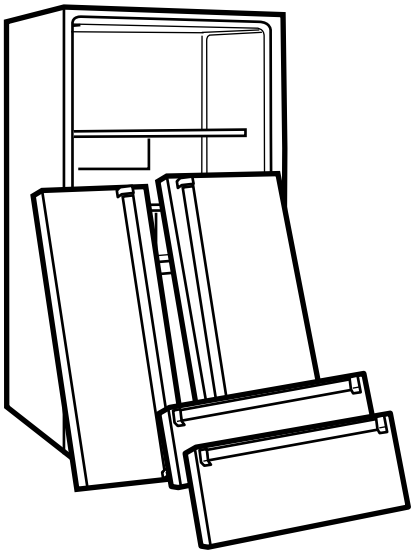

CFC DISPOSAL

Your old refrigerator may have a cooling system that used CFCs (chlorofluorocarbons). CFCs are believed to harm stratospheric ozone.

If you are throwing away your old refrigerator, make sure the CFC refrigerant is removed for proper disposal by a qualified servicer. If you intentionally release this CFC refrigerant, you can be subject to fines and imprisonment under provisions of environmental legislation.

HOW TO CONNECT ELECTRICITY

IMPORTANT: Please read carefully.

⚠WARNING

Electrical Shock Hazard

For personal safety, this appliance must be properly grounded. Have the wall outlet and the circuit checked by a qualified electrician to make sure the outlet is properly grounded.

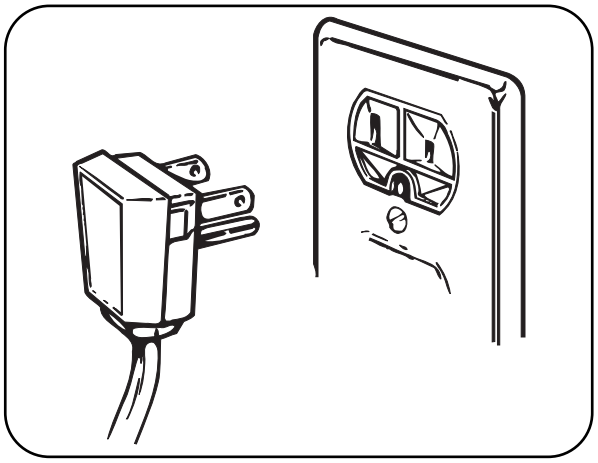

RECOMMENDED GROUNDING METHOD

The refrigerator should always be plugged into its own individual properly grounded electrical outlet rated for 120 volts, 60 Hz, AC only, and fused at 20 amperes. This provides the best performance and also prevents overloading house wiring circuits which could cause a fire hazard from overheated wires. It is recommended that a separate circuit serving only this appliance be provided.

Use a receptacle which cannot be turned off with a switch or pull chain. Do not use an extension cord. Where a standard two-prong wall outlet is encountered, it is your personal responsibility and obligation to have it replaced with a properly grounded three-prong wall outlet.

Do not, under any circumstances, cut or remove the third (ground) prong from the power cord.

Do not use an adapter plug.

NOTE: Some models have LED interior lighting and service should be performed by a qualified technician.

When you are finished, reconnect the refrigerator to the electrical source and reset the control (Thermostat, Refrigerator Control, or Freezer Control, depending on the model) to the desired setting.

USE OF EXTENSION CORDS

Because of potential safety hazards under certain conditions, we strongly recommend against the use of an extension cord.

However, if you still elect to use an extension cord, it is absolutely necessary that it be a UL-listed (USA), 3-wire grounding-type appliance extension cord having a grounding-type plug and outlet and that the electrical rating of the cord be 20 amperes (minimum) and 120 volts.

Use of an extension cord will increase the clearance needed for the back of the refrigerator.

SAVE THESE INSTRUCTIONS

SPECIAL FEATURES

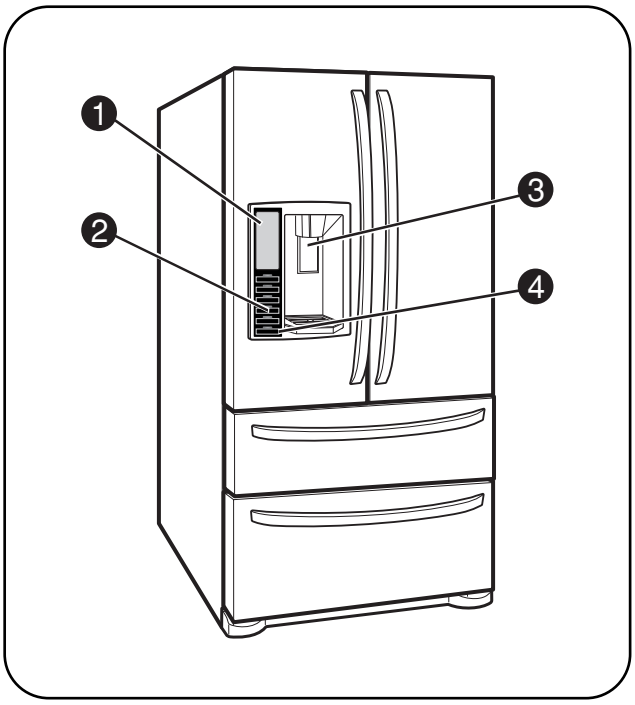

❶ CONTROL PANEL LED DISPLAY SCREEN

Simple electronic controls are user-friendly. The LED screen shows refrigerator and freezer temperatures, displays water filter status, dispenser information, and more.

❷ ICE PLUS

When this feature is activated, the freezer section will run at the coldest temperature for a 24- hour period to increase ice production by about 20 percent.

❸ FILTERED WATER AND ICE DISPENSER

The water dispenser offers fresh, chilled, filtered water through the door. The ice dispenser offers cubed or crushed ice.

❹ DOOR ALARM

A warning alarm sounds at 30-second intervals when the refrigerator or freezer door is left open for more than 60 seconds.

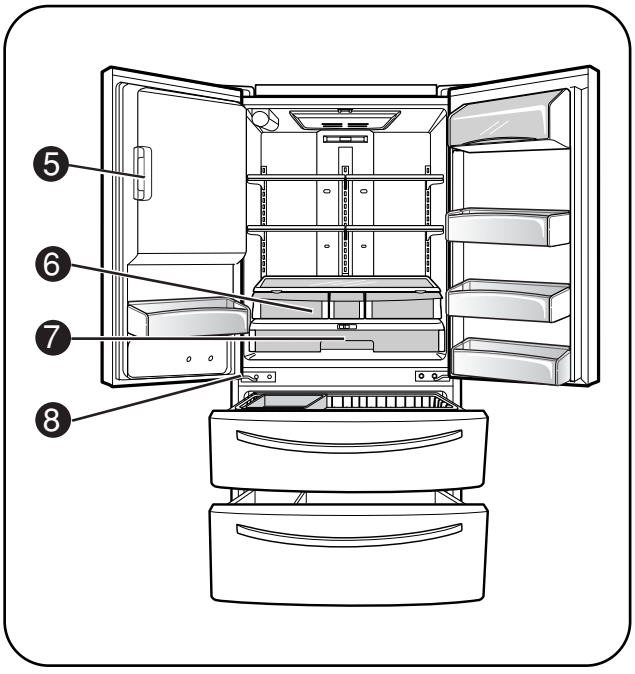

❺ IN-DOOR ICE BIN

The icemaker automatically produces 80–130 ice cubes in a 24-hour period to keep the ice dispenser fully supplied. The in-door design creates more shelf space.

❻ CRISPERS

LG's crispers preserve humidity and help vegetables stay crisp.

❼ GLIDE'N'SERVE

Provides storage space with a variable temperature control that keeps the compartment colder than refrigerator.

❽ AUTO CLOSING HINGE

When you slightly push the door of the refrigerator, it is automatically closed. (The door is automatically closed within 30° of the opening angle.)

KEY PARTS AND COMPONENTS

In addition to the special features and components outlined in the **Special Features** section, there are several other important components that are referenced in this manual.

❶ ADJUSTABLE REFRIGERATOR SHELVING
The refrigerator compartment shelves are adjustable to allow flexibility for storage needs.

❷ MODULAR DOOR BINS
Three interchangeable bins can be arranged to suit your storage needs.

❸ REMOVABLE ICE STORAGE BIN
The ice storage bin can be removed to fill ice buckets, coolers, or pitchers.

❹ LED INTERIOR LAMPS
Two separate LED arrays light the freezer and refrigerator interiors.

❺ FIXED DOOR BIN

❻ FIXED DOOR BIN

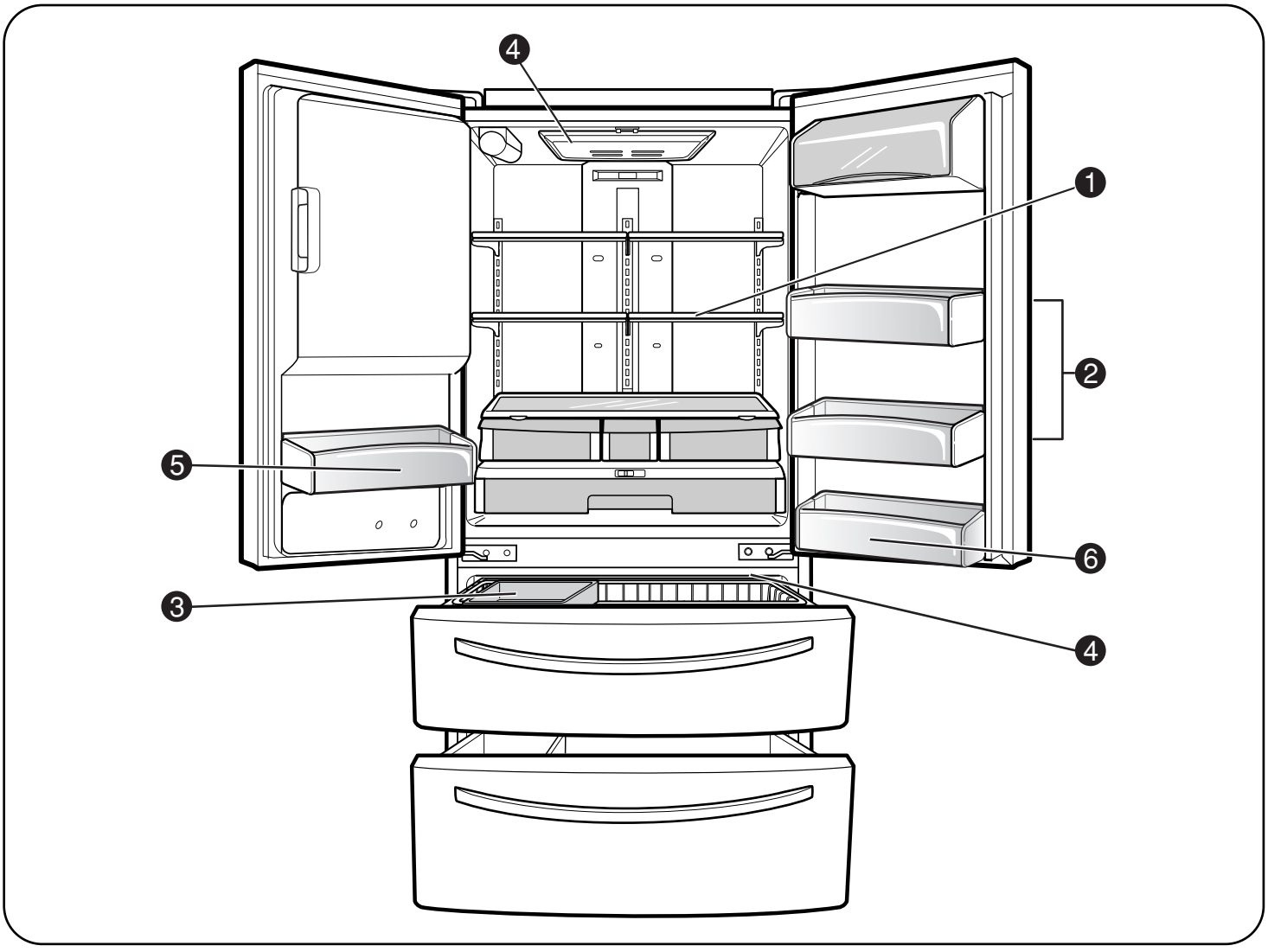

CHOOSE THE PROPER LOCATION

⚠WARNING

Excessive Weight Hazard

Two or more people are required when moving and unpacking the appliance.

- Store and install the refrigerator where it will not be exposed to temperatures below freezing or exposed to outdoor weather conditions.
- Install this appliance in an area where the temperature is between 55°F (13°C) and 110°F (43°C). If the temperature around the appliance is too low or too high, cooling ability may be adversely affected.
- If this refrigerator is installed where the temperature is above 110°F (43°C), the freezing capacity is compromised and the cost of electricity used increases.
- To reduce the risk of electric shock, do not install the refrigerator in a wet or damp area.
- Select a place where a water supply can be easily connected for the automatic icemaker and dispenser.
- Unstable installation may cause vibration and noise. If the floor is not even, make the refrigerator level by rotating the height adjusting screws.
- Properly ground the refrigerator to conform with all governing codes and ordinances.

⚠CAUTION

Avoid placing the unit near heat sources, direct sunlight, or moisture.

CLEARANCES

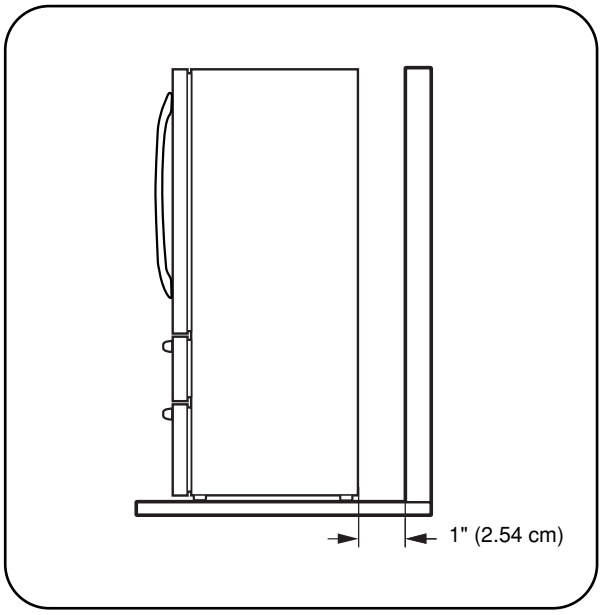

- Too small a distance from adjacent items may result in lowered freezing capability and increased electricity consumption charges. Allow at least 24 in. (61 cm) in front of the refrigerator to open the doors.

NOTE: For complete dimensions and specifications, see page 41.

FLOORING

- To minimize noise and vibration, the refrigerator MUST be installed on a solidly constructed floor.
- To avoid vibration, the unit must be level. If required, adjust the leveling legs to compensate for unevenness of the floor. The front should be slightly higher than the rear to aid in door closing. The leveling legs can be turned easily by pushing against the top of the refrigerator to take the weight off the feet. Turn the leveling legs clockwise to raise the unit or counterclockwise to lower it.
- Carpeting and soft tile surfaces are not recommended.
- Never install the refrigerator on a platform or weakly supported structure.

NOTE: When moving the refrigerator for cleaning or service, be sure to protect the floor. Always pull the refrigerator straight out when moving it.

Do not wiggle or walk the refrigerator when trying to move it; floor damage could occur.

NOTE: It is recommend that the doors be removed when it is necessary to move the refrigerator through a narrow opening.

HANDLE REMOVAL

To move the refrigerator through a house door, it may be necessary to remove the refrigerator door handles.

NOTE: Handle appearance may vary from illustrations on this page.

⚠CAUTION

- Use special care when removing handles to prevent scratching the doors.
- The handle could be damaged if you hit it with a hammer while removing or attaching.
- When you assemble or disassemble a handle, you must push or pull with reasonable force.

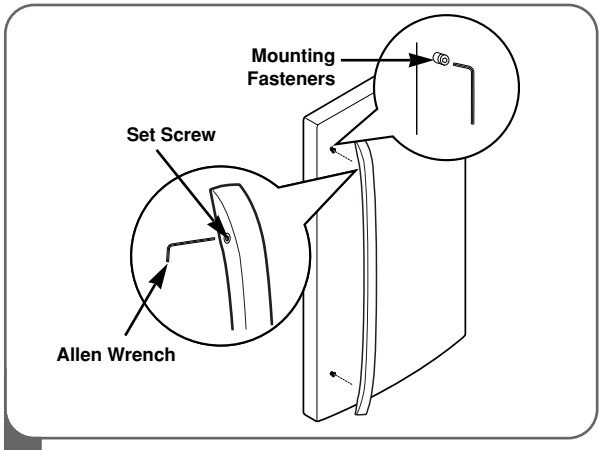

1 Loosen the set screws with a 2.5 mm (3/32") Allen wrench and remove the handle.

NOTE: If the handle mounting fasteners need to be tightened or removed, use a 1/4" Allen wrench.

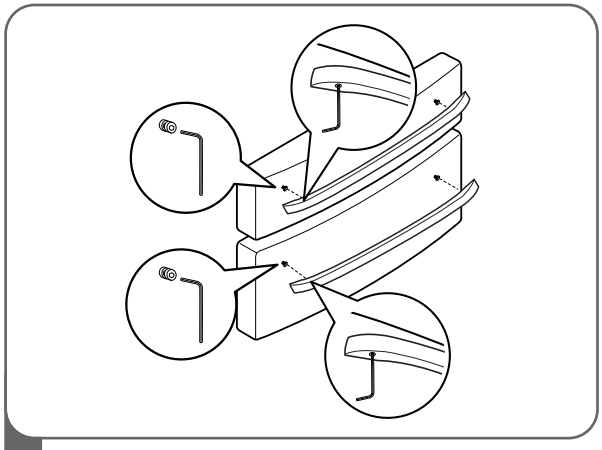

2 Loosen the set screws located on the lower side of the handle with a 3.1 mm (1/8") Allen wrench and remove the handle.

NOTE: If the handle mounting fasteners need to be tightened or removed, use a 1/4" Allen wrench.

HANDLE REMOVAL (CONT.)

HANDLE REINSTALLATION

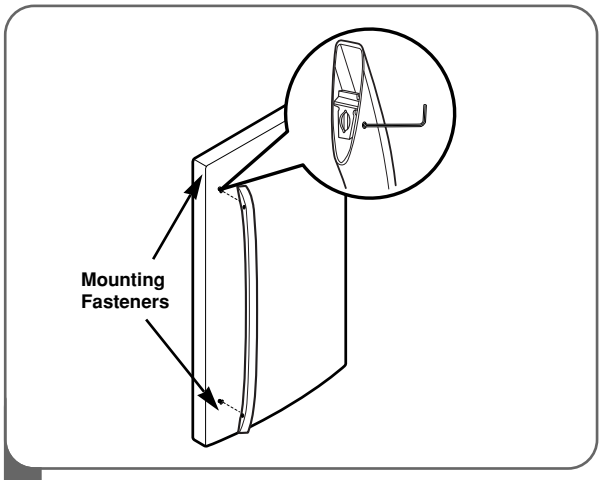

1 Place the handle on the door by aligning handle footprints to fit mounting fasteners and tighten the set screws with a 2.5 mm (3/32") Allen wrench.

NOTE: If the handle mounting fasteners need to be tightened or removed use a 1/4" Allen wrench

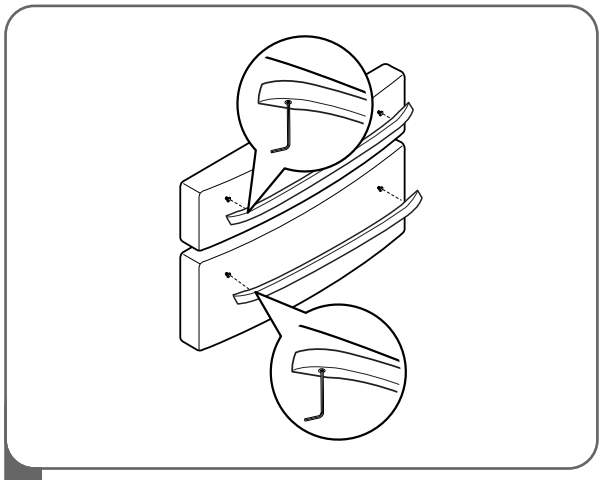

2 Place the handle on the door by aligning handle footprints to fit mounting fasteners and tighten the set screws on the bottom of the handle with a 3.1 mm (1/8") Allen wrench.

NOTE: If the handle mounting fasteners need to be tightened or removed use a 1/4" Allen wrench.

DOOR AND DRAWER REMOVAL

DOOR REMOVAL

⚠WARNING

Electric Shock Hazard

- Disconnect electrical supply to the refrigerator before installing. Failure to do so could result in death or serious injury.
- Do not put hands or feet or metal sticks into the air vents, base grille, or bottom of the refrigerator. You may be injured or receive an electrical shock.
- Be careful when you work with the hinge, base grille, and stopper. You may be injured.

Before you begin, remove food and bins from the doors.

If your entrance door is too narrow for the refrigerator to pass through, remove the refrigerator door and move the refrigerator sideways through the doorway.

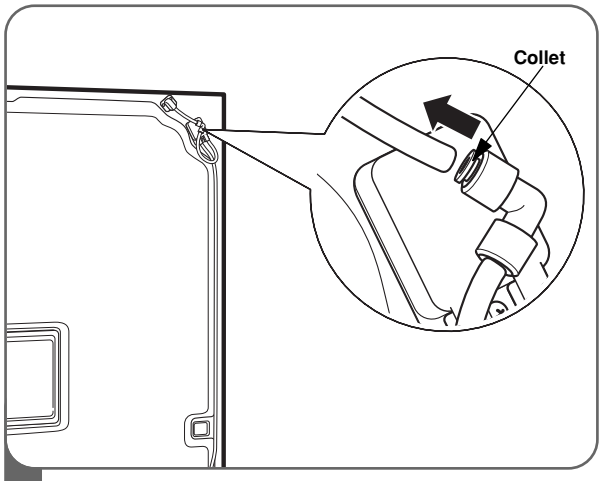

1 **To remove the left refrigerator door:**

Pull the water tube out of the fitting while pressing the release ring on the fitting.

NOTE : When you pull out the tube, first you have to push the collet by opposite direction of arrow in the upper picture and pull the tube out by direction of arrow.

DOOR AND DRAWER REMOVAL (CONT.)

DOOR REMOVAL (CONT.)

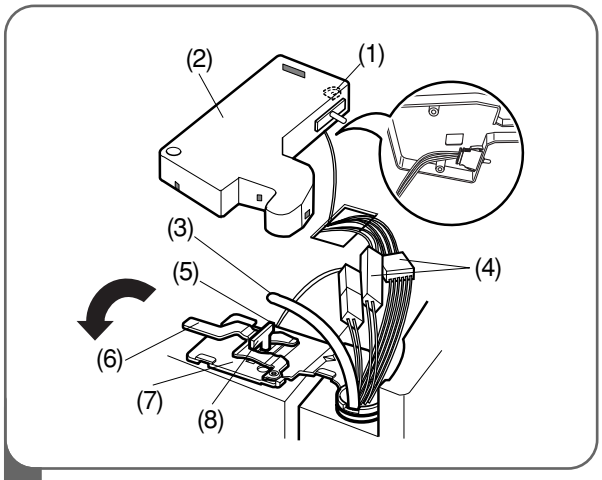

2
- Open the door. Remove the top hinge cover screw (1).
- Use a flat-head screwdriver to pry back the hooks (not shown) on the front underside of the cover (2). Lift up the cover.
- Remove the cover. Pull out the tube (3).
- Disconnect all the wire harnesses (4).
- Remove the grounding screw(5)
- Rotate hinge lever (6) counterclockwise. Lift the top hinge (7) free of the hinge lever latch (8).

IMPORTANT: When lifting the hinge free of the latch, be careful that the door does not fall forward.

- Lift the door from the middle hinge pin and remove the door.
- Place the door, inside facing up, on a non-scratching surface.

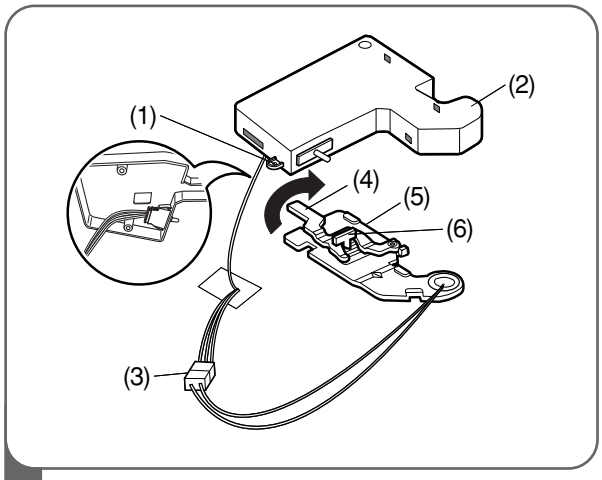

3 **To remove the right refrigerator door:**
- Open the door. Remove the top hinge cover screw (1). Lift up the cover (2).
- Remove the cover.
- Disconnect the wire harness (3).
- Rotate the hinge lever (4) clockwise. Lift the top hinge (5) free of the hinge lever latch (6).

IMPORTANT: When lifting the hinge free of the latch, be careful that the door does not fall forward.

- Lift the door from the middle hinge pin and remove the door.
- Place the door, inside facing up, on a non-scratching surface.

DOOR AND DRAWER REMOVAL (CONT.)

DOOR REINSTALLATION

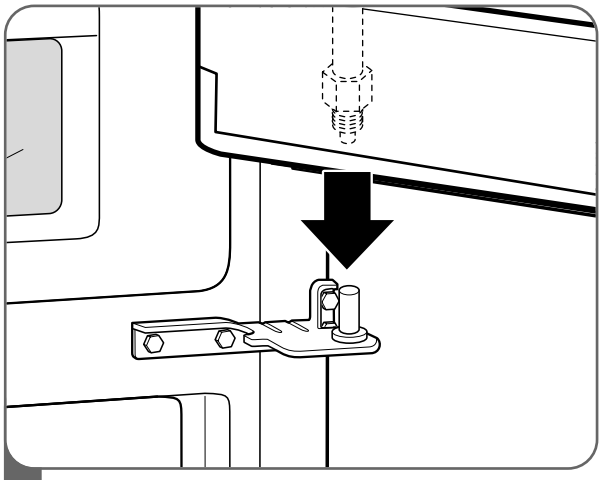

1 Install the right-side door first.

- Lower the door onto the middle hinge pin as shown.
- Make sure the plastic sleeve is inserted in the bottom of the door.

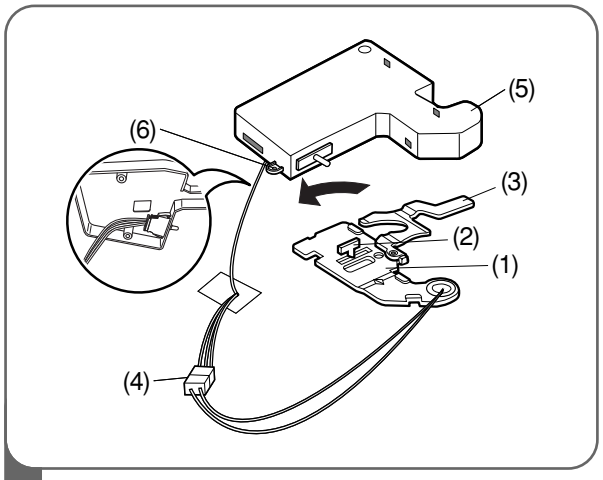

2
- Fit the top hinge (1) over the hinge lever latch (2) and into place. Rotate the lever (3) counterclockwise to secure the hinge.
- Connect the wire harness (4).
- Hook the tab on the door-switch side of the cover (5) under the edge of the wire opening in the cabinet top. Position the cover into place. Insert and tighten the cover screw (6).

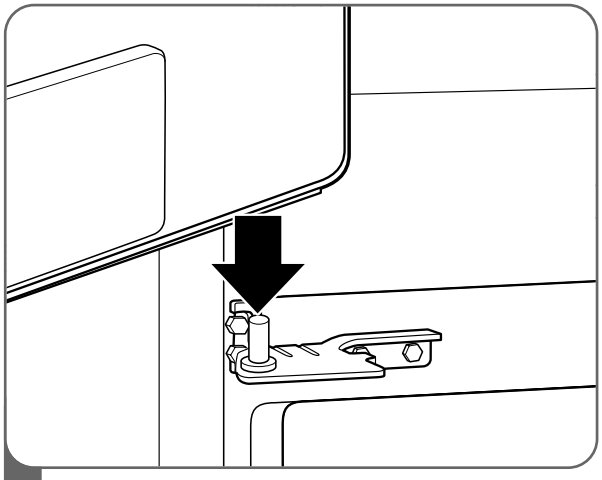

3 Install the left-side door.

- Lower the door onto middle hinge pin.

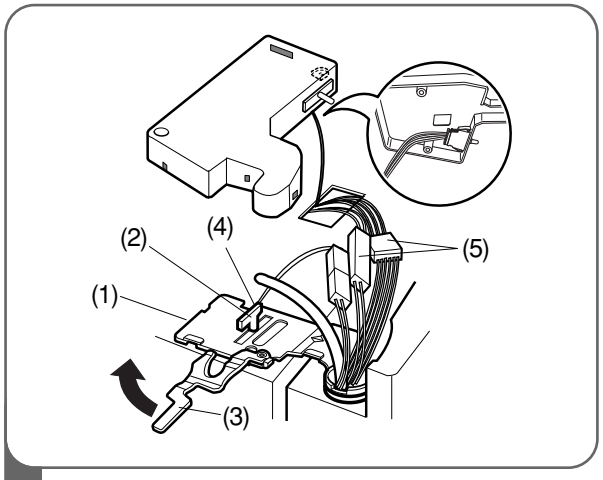

4
- Fit the top hinge (1) over the hinge lever latch (2) and into place. Rotate the lever (3) clockwise to secure the hinge.
- Install the grounding screw (4) and connect all the wire harnesses (5).

DOOR AND DRAWER REMOVAL (CONT.)

DOOR REINSTALLATION (CONT.)

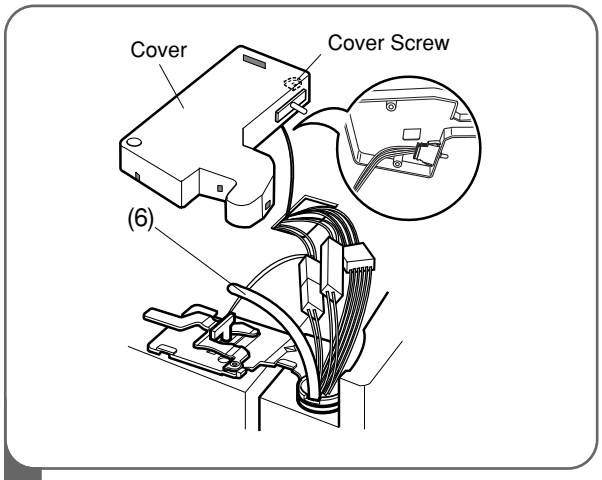

5 • Push the water supply tube (6) into the hole on the top case and pull it through the backplate.

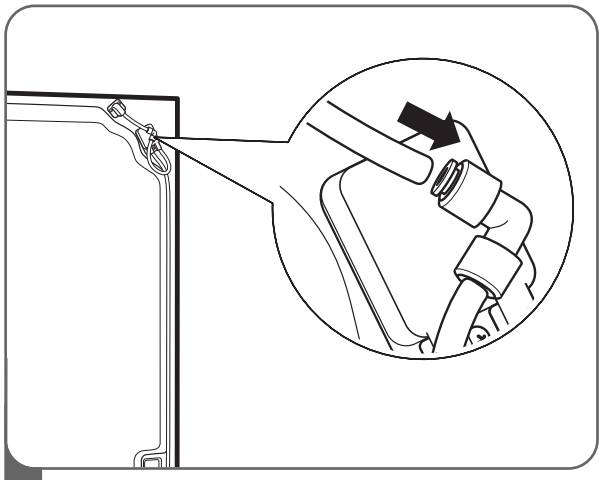

6 Insert the water supply tube into the connector.

- Insert the tube at least 5/8 in. (15 mm) into the connector.
- Hook the tab on the door-switch side of the cover under the edge of the wire opening in the cabinet top. Position the cover into place. Insert and tighten the cover screw.

⚠CAUTION

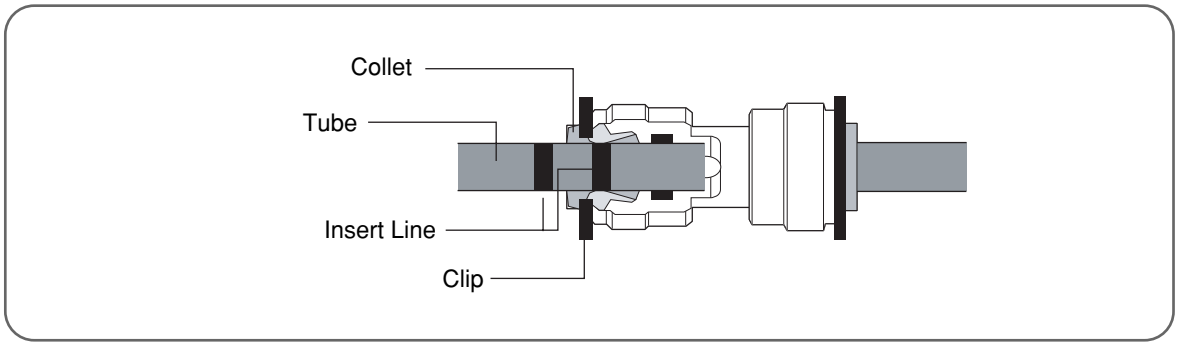

1. Insert the tube until you can see only one of the lines printed on the tube.
2. After inserting, pull the tube to ascertain that it is secure.
3. Assemble the clip.

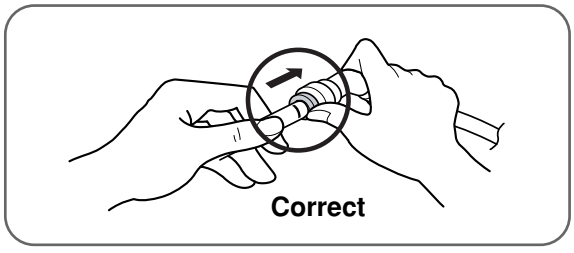

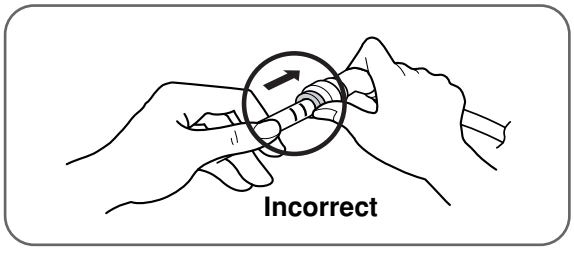

DOOR AND DRAWER REMOVAL (CONT.)

FREEZER DRAWER REMOVAL

⚠CAUTION

- To avoid possible injury or product or property damage, you will need two people to perform the following instructions.
- When you remove the drawer, do not hold the handle. It may come off and could cause injury.
- When laying the drawer down, be careful not to damage the floor or hurt your feet with the sharp edges on the hinge side.

TOP DRAWER

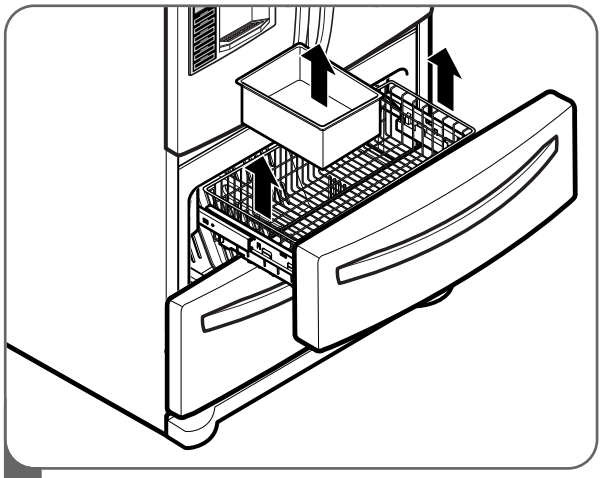

1 To remove the freezer drawer, pull the drawer open to full extension. Remove the drawer and Ice bin by lifting the basket from the rail system.

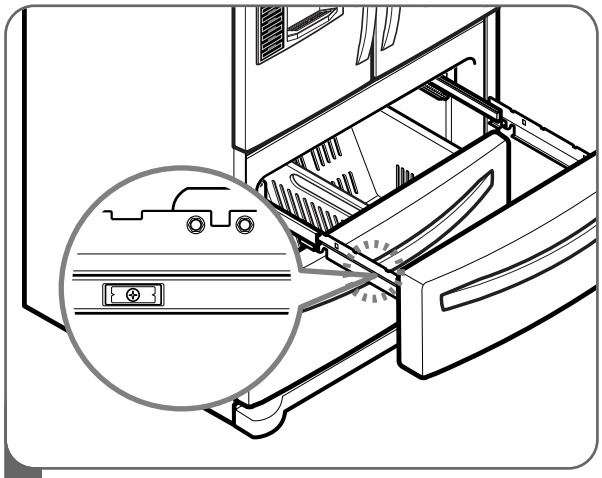

2 Remove the screws of the rail on both sides.

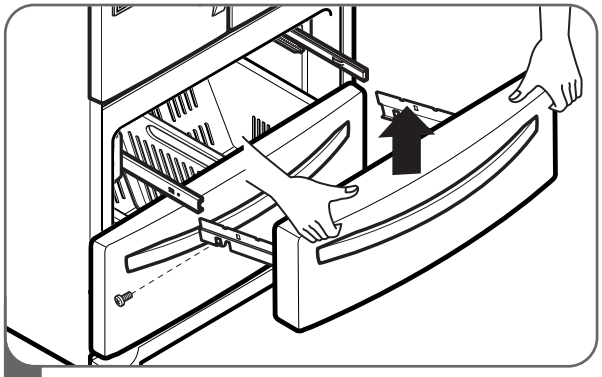

3 With both hands, hold both sides of the door and pull it up to separate it from the rails.

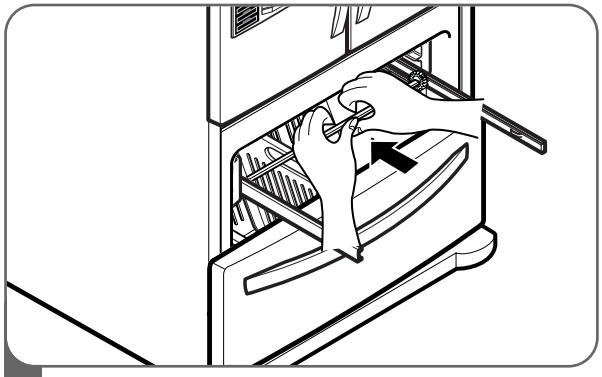

4 With both hands, flex the center bar enough to allow the gears on both ends to release from the track.

⚠CAUTION: When you remove the drawer, do not hold the handle. If it may come off and it could cause personal injury.

⚠CAUTION: When laying the drawer down, be careful not to damage the floor or hurt your feet by the sharp edges on hinge side.

DOOR AND DRAWER REMOVAL (CONT.)

FREEZER DRAWER REMOVAL

⚠CAUTION

- To avoid possible injury or product or property damage, you will need two people to perform the following instructions.
- When you remove the drawer, do not hold the handle. It may come off and could cause injury.
- When laying the drawer down, be careful not to damage the floor or hurt your feet with the sharp edges on the hinge side.

BOTTOM DRAWER

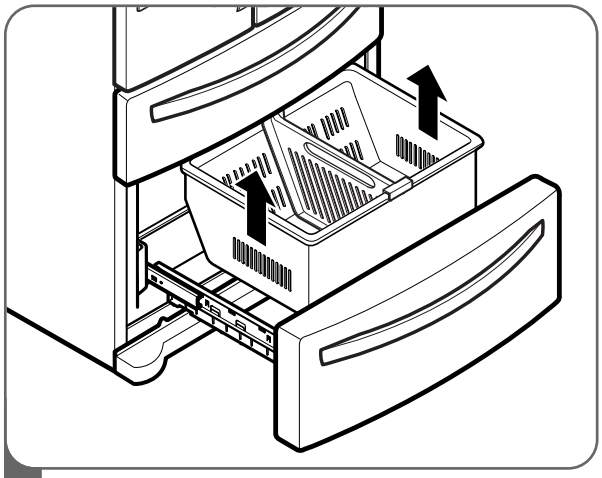

1 To remove the freezer drawer, pull the drawer open to full extension. Remove the lower DuraBase ® basket by lifting the basket from the rail system.

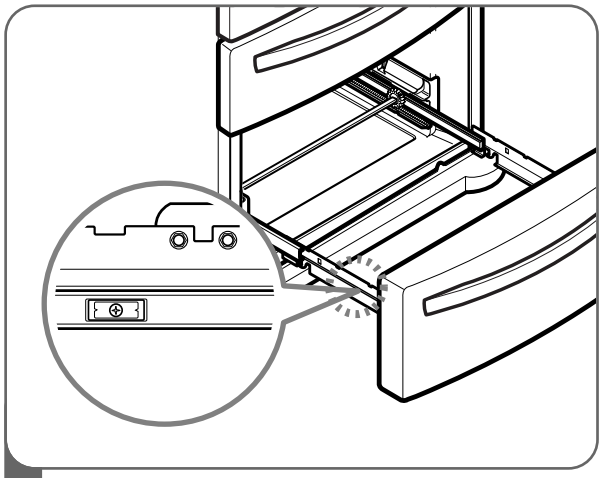

2 Remove the screws of the rail on both sides.

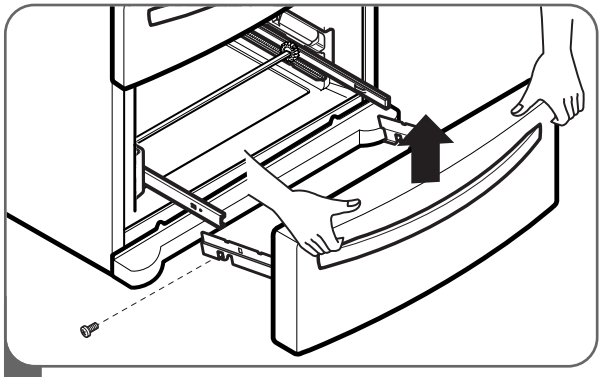

3 With both hands, hold both sides of the door and pull it up to separate it from the rails.

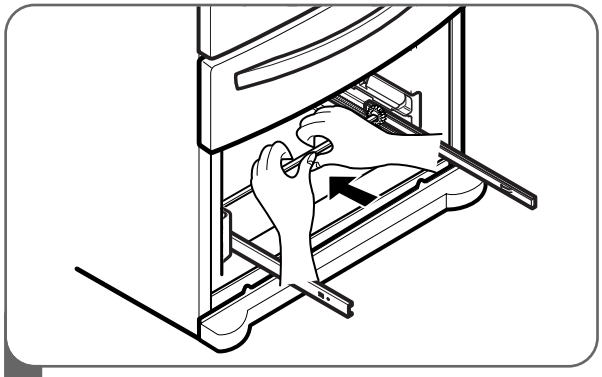

4 With both hands, flex the center bar enough to allow the gears on both ends to release from the track.

⚠CAUTION: When you remove the drawer, do not hold the handle. If it may come off and it could cause personal injury.

⚠CAUTION: When laying the drawer down, be careful not to damage the floor or hurt your feet by the sharp edges on hinge side.

DOOR AND DRAWER REMOVAL (CONT.)

FREEZER DRAWER REINSTALLATION

⚠CAUTION

- To avoid possible injury or product or property damage, you will need two people to perform the following instructions.

⚠DANGER

Risk of Child Entrapment

- To prevent accidental child and pet entrapment or suffocation risk, DO NOT allow them to play inside of the freezer drawer.
- DO NOT step or sit on the freezer drawer.

TOP DRAWER

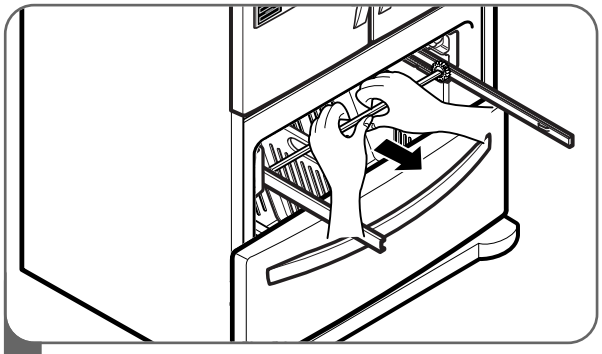

1 To reinstall the freezer drawer, hold the center bar with both hands and pull it out until both rails are fully extended.

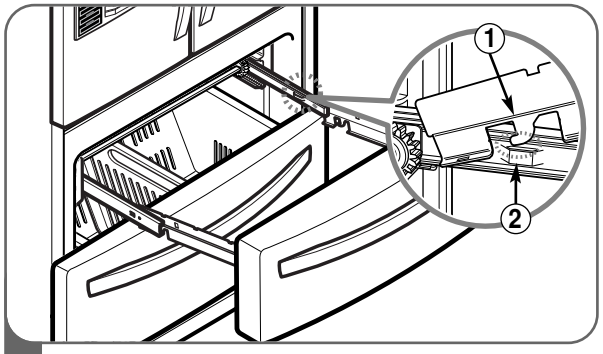

2 Hook door supports (1) into rail tabs (2).

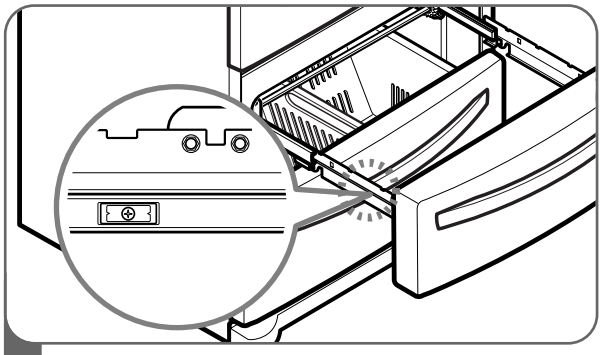

3 Lower door into final position and tighten the screws (3). Make sure you have a right rail cover for each side.

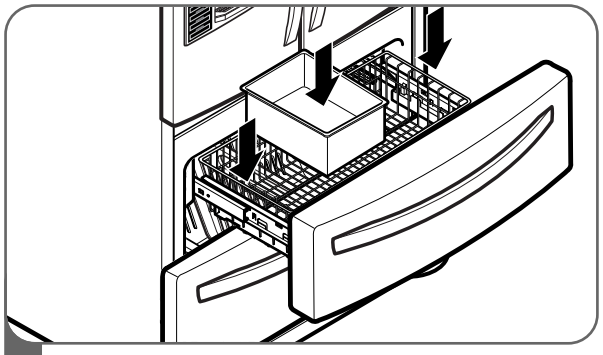

4 With the drawer pulled out to full extension, insert the drawer and Ice Bin in the rail assembly.

⚠WARNING: To prevent accidental child and pet entrapment or suffocation risk. DO NOT allow them to play inside of drawer.

⚠WARNING: DO NOT step or sit down on freezer.

DOOR AND DRAWER REMOVAL (CONT.)

FREEZER DRAWER REINSTALLATION

⚠CAUTION

- To avoid possible injury or product or property damage, you will need two people to perform the following instructions.

⚠DANGER

Risk of Child Entrapment

- To prevent accidental child and pet entrapment or suffocation risk, DO NOT allow them to play inside of the freezer drawer.
- DO NOT step or sit on the freezer drawer.

BOTTOM DRAWER

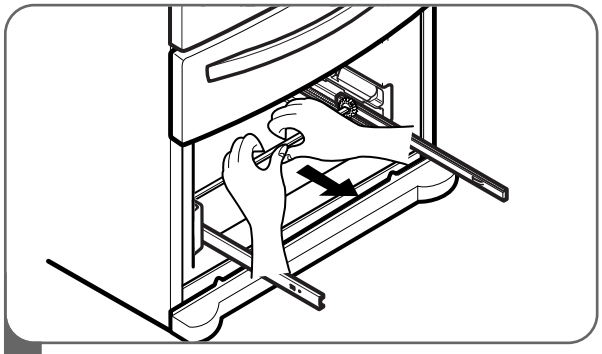

1 To reinstall the freezer drawer, hold the center bar with both hands and pull it out until both rails are fully extended.

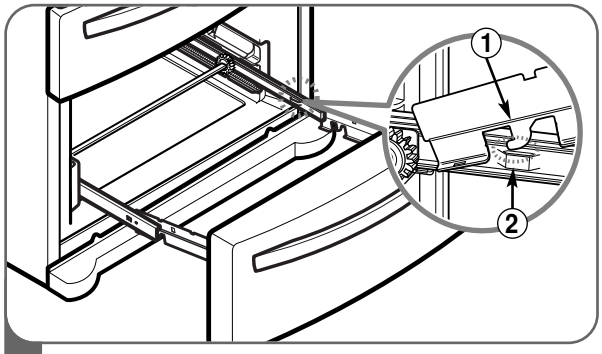

2 Hook door supports (1) into rail tabs (2).

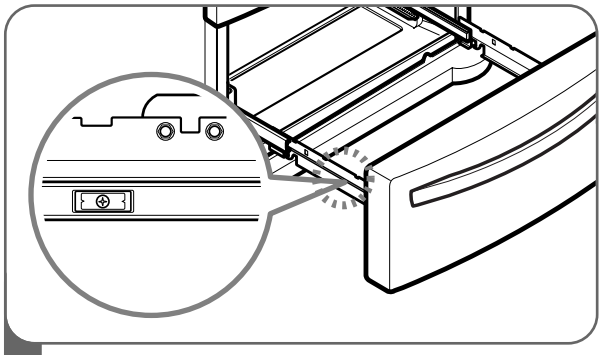

3 Lower door into final position and tighten the screws (3). Make sure you have a right rail cover for each side.

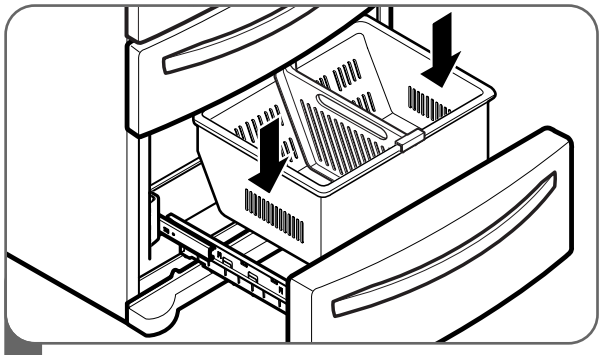

4 With the drawer pulled out to full extension, insert the lower basket in the rail assembly.

⚠WARNING: To prevent accidental child and pet entrapment or suffocation risk. DO NOT allow them to play inside of drawer.

⚠WARNING: DO NOT step or sit down on freezer.

CONNECTING THE WATER SUPPLY

⚠WARNING

Connect to safe drinking water supply only.

- The water pressure must be between 21 and 121 p.s.i. (1.5~8.5 kgf/cm^2) on models without a water filter and between 43 and 121 p.s.i. (3~8.5 kgf/cm^2) on models with a water filter.
- If water pressure does not reach 21 psi (1.5kgf/cm^2) or falls below, it is necessary to purchase a separate pressure pump for normal automatic icemaker and water dispensing operation.
- It is recommended that the total length of the water feed tube does not exceed 26 ft. (8 m).
- Install the water supply line where it will not be affected by heat.

IMPORTANT: Read all directions thoroughly before you begin.

- If operating the refrigerator before installing the water connection, turn the icemaker to the OFF position to prevent operation without water.
- All installations must be in accordance with local plumbing code requirements.
- Use copper tubing and check for leaks.
- Install tubing only in areas where temperatures will remain above freezing.
- It may take up to 24 hours for the icemaker to begin producing ice.

Tools Required

- Standard screwdriver
- 7/16-in. and 1/2-in. open-end wrenches or two adjustable wrenches
- 1/4-in. nut driver
- 1/4-in. drill bit
- Hand drill or electric drill (properly grounded)

NOTE: Refrigerator dealers offer a kit with a 1/4-in. saddle-type shutoff valve, a union, and copper tubing. Before purchasing, make sure a saddle-type valve complies with local plumbing codes.

Do not use a piercing-type or 3/16-in. saddle valve which reduces water flow and clogs more easily.

NOTE: The Commonwealth of Massachusetts Plumbing Code 248CMR shall be adhered to.

Saddle valves are illegal and use is not permitted in Massachusetts. Consult with your licensed plumber.

Cold Water Supply

- The icemaker water valve contains a flow washer which is used as a water pressure regulator.
- The icemaker needs to be connected to a cold water line with water pressure between 21~121 psi (1.5~8.5 kgf/cm^2) on models without a water filter and between 43 and 121 p.s.i. (3~8.5kgf/cm^2) on models with a water filter.

CONNECTING THE WATER LINES

IMPORTANT: Before connecting the tubing to the water line, unplug the refrigerator or disconnect the power.

- Turn off the main water supply and open the nearest faucet to relieve pressure in the line. Opening an outside faucet may help drain water from the line in the house.
- Find a 1/2-in. vertical COLD water pipe near the refrigerator.

NOTE: A horizontal pipe will work, but the following precaution must be taken: drill on the top of the pipe, not the bottom. This will help keep water away from the drill and also keep normal sediment from collecting in the valve.

- To determine the length of copper tubing you will need, measure from the connection on the lower left rear of the refrigerator to the water pipe. Add 7 ft. (2.1 m) to allow for moving the refrigerator for cleaning. Use 1/4-in. O.D. (outside diameter) copper tubing. Be sure both ends of the copper tubing are cut square.
- Using a drill, drill a 1/4-in. hole in the cold water pipe you have selected.

CONNECTING THE WATER LINES (CONT.)

- Fasten the shutoff valve to the cold water pipe with the pipe clamp. Be sure the outlet end is solidly in the 1/4-in. drilled hole in the water pipe and the washer is under the pipe clamp. Tighten the packing nut. Tighten the pipe clamp screws carefully and evenly so the washer makes a watertight seal. Do not overtighten or you may crush the copper tubing, especially if soft (coiled) copper tubing is used. Now you are ready to connect the copper tubing.
- Slip the compression sleeve and the compression nut onto the copper tubing as shown. Insert the end of the tubing into the outlet end squarely as far as it will go. Screw the compression nut onto the outlet end with a wrench. A flare nut wrench works best, but an open-end wrench will suffice. Do not overtighten.
- Place the free end of the tubing into a container or sink, and turn on the main water supply. Flush out the tubing until the water is clear. Turn off the shutoff valve on the water pipe. Coil the copper tubing as shown below.

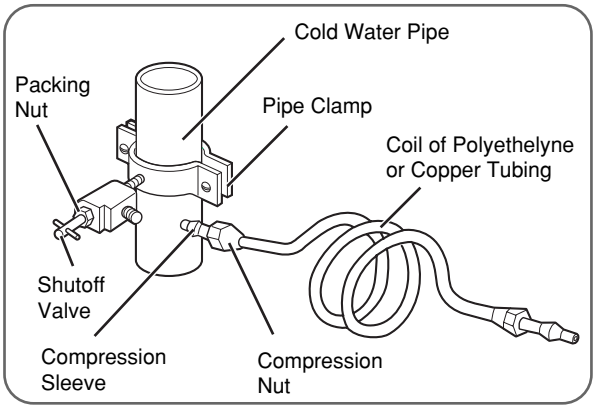

IMPORTANT: Before connecting the tubing to the refrigerator, be sure the refrigerator power cord is not plugged into the wall outlet.

NOTE: If your refrigerator is equipped with an internal water filter, an external in-line water filter should not be used.

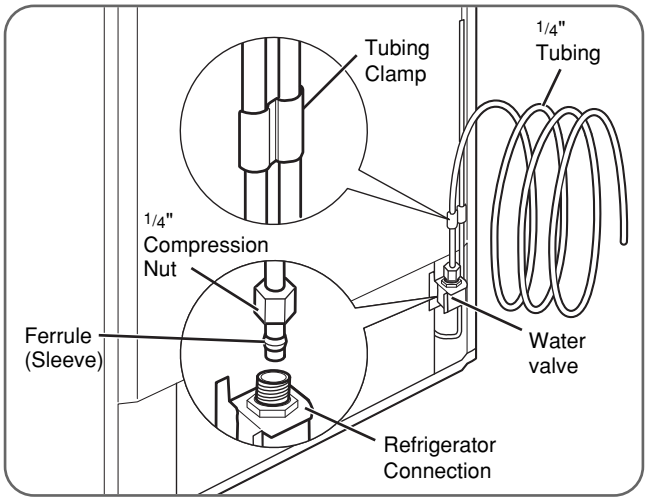

- Remove the plastic flexible cap from the water valve.
- Place the compression nut and ferrule (sleeve) onto the end of the tubing as shown.
- Insert the end of the copper tubing into the connection as far as possible. While holding the tubing, tighten the fitting.

IMPORTANT: Tighten any connections that leak. Open the water at the shutoff valve.

- Plug in the refrigerator.
- Arrange the coil of copper tubing behind the refrigerator so it does not vibrate against the back of the refrigerator or against the wall.
- Check for leaks.
- Before connecting the water line to house, purge house line for 2 minute.

NOTE: It may take a few seconds for water to begin to flow as the internal tank fills and air clears from the lines.

- Push the refrigerator back to the wall.
- Set the icemaker switch to the ON position.

NOTE: The icemaker will not begin to operate until it reaches its operating temperature of 15°F (-9°C). It will then begin operation automatically.

NOTE: Throw away the first few batches of ice (about 20 pieces).

LEVELING THE REFRIGERATOR DOORS

⚠WARNING

Electrical Shock Hazard

- Be careful when you work with the hinges, base grille, and stopper. You may be injured.
- Do not put hands, feet, or metal items into the air vents, base grille, or the bottom of the refrigerator. You may be injured or receive an electrical shock.

Leveling

After installing, secure the product with the LEG not to move left or right.

Your refrigerator has two front leveling legs—one on the right and one on the left. Adjust the legs to alter the tilt from front to back or side to side. If your refrigerator seems unsteady or you want the doors to close more easily, adjust the refrigerator's tilt using the following instructions:

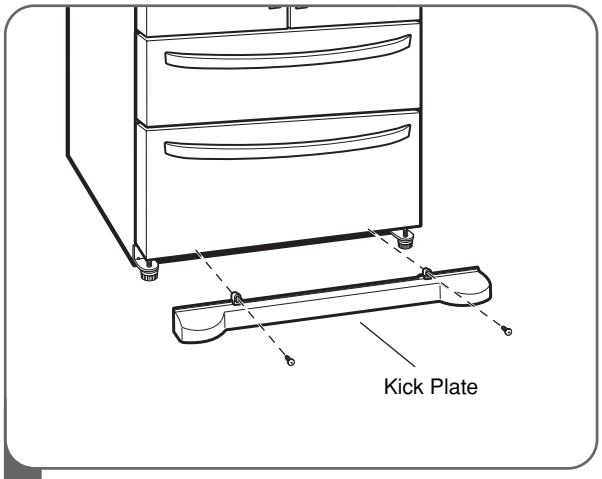

1 Plug the power cord into a 3-prong grounded outlet, and move the refrigerator into its final position. Remove the kick plate screws and then the kick plate.

- Open the Freezer Drawer.
- Once the drawer is open, there is sufficient clearance to remove the screws on top of the kick plate.

NOTE: To replace the kick plate, place it into position, and then insert and tighten the screws.

⚠CAUTION

- To avoid possible injury or product or property damage, you will need two people to perform the following instructions.

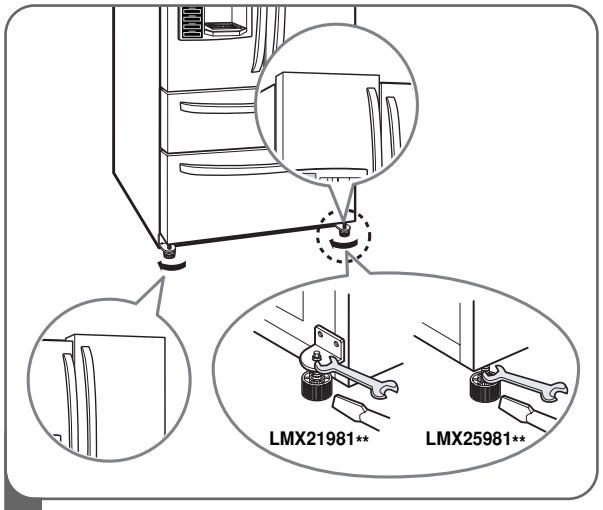

2 Level the refrigerator by using an 11/32 inch (8mm), 11/16 inch (18mm) wrench or a flat blade screw driver.

Turn the leveling legs (CCW) to raise or (CW) to lower the height of the front of the refrigerator.

NOTE: The front of the refrigerator should be slightly higher than the back.

NOTE: If someone pushes backward against the top of the refrigerator, weight is lifted off of the leveling legs, which makes adjustment easier.

Open both doors to make sure they close easily. If not, raise the leveling legs higher by turning both clockwise the same amount.

Once the refrigerator is level, replace the kick-plate.

NOTE: Your new refrigerator is uniquely designed with two fresh food doors. Either door can be independently opened or closed.

You will have to exert slight pressure on the doors to close them completely.

NOTE: In order not to move the refrigerator back and forth, fix it with the 'Adjust' to the floor to install and use.

LEVELING THE REFRIGERATOR DOORS (CONT.)

DOOR ALIGNMENT

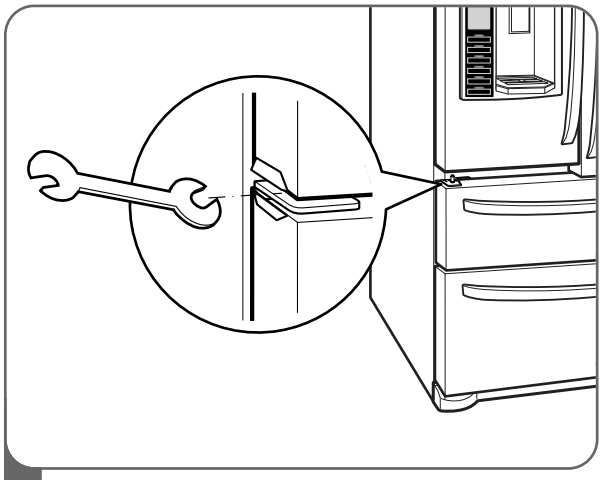

1
- Remove the Base Grillie.
- Turn the leveling legs (CCW) to raise or (CW) to lower the height of the front of the refrigerator by using flat blade screw driver or 11/32" wrench.
- Use the wrench (Included with the User Manual) to adjust the bolt in the door hinge to adjust the height. (CCW to raise or CW to lower the height.)

STARTING

Before loading your refrigerator with fresh foods:

- Remove tape and any temporary labels from your refrigerator before using. To remove any remaining adhesive residue, rub the area briskly with your thumb, or rub a small amount of liquid dish soap over the adhesive with your fingers. Wipe with warm water and dry. Do not use sharp instruments, rubbing alcohol, flammable fluids, or abrasive cleaners to remove tape or glue.

NOTE: Do not remove any warning-type labels, the model and serial number label, or the tech sheet that is taped to the back of the refrigerator.

- Thoroughly clean your refrigerator and wipe off all dust that may have accumulated during shipping.
- Install accessories such as the ice cube bin, drawers, and shelves, in their proper places. They are packed together to prevent possible damage during shipment.
- Adjust the desired temperature for the refrigerator and freezer (see Adjusting the Temperature and Functions).
- Let your refrigerator run for at least 2 or 3 hours before putting food in it. Check the flow of cold air in the freezer compartment to ensure proper cooling. Your refrigerator is now ready for use.

CONTROL PANEL FEATURES

For complete details on button functions, see pages 24–26.

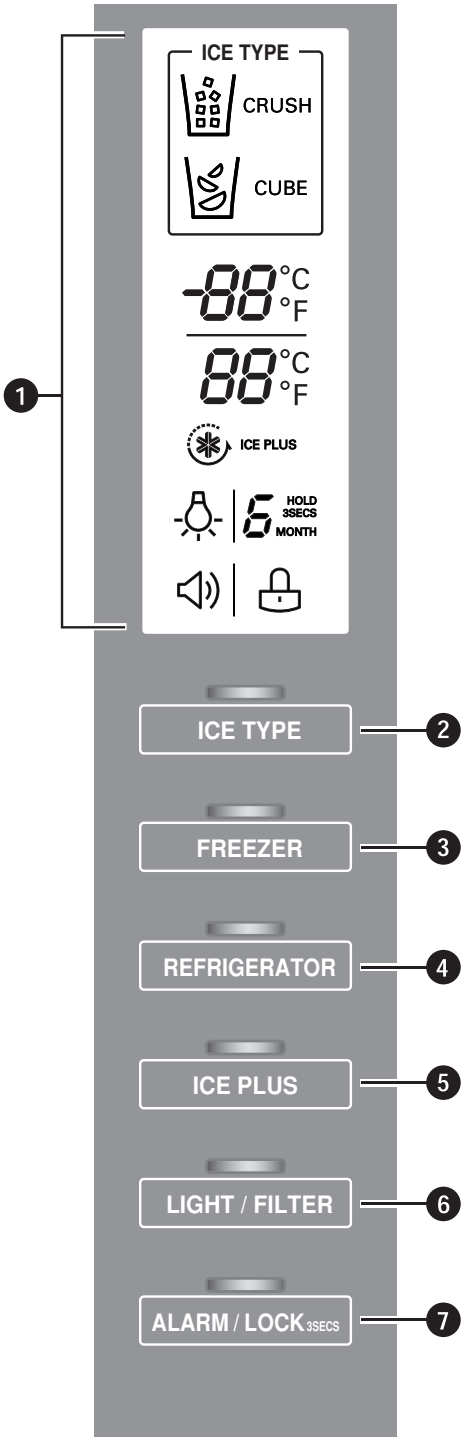

❶ LED DISPLAY

The LED display shows the temperature settings, dispenser options, water filter, door alarm, and locking status messages.

❷ ICE TYPE BUTTON

The ICE TYPE button is used to select Cubed Ice or Crushed Ice.

❸ FREEZER BUTTON

Press the FREEZER button to adjust the temperature in the freezer compartment.

NOTE: When pressed simultaneously with the REFRIGERATOR button for more than five seconds, the temperature display will change from Fahrenheit to Celsius or vice versa.

❹ REFRIGERATOR BUTTON

Press the REFRIGERATOR button to adjust the temperature in the refrigerator compartment.

NOTE: When pressed simultaneously with the FREEZER button for more than five seconds, the temperature display will change from Fahrenheit to Celsius or vice versa.

❺ ICE PLUS BUTTON

Press this button to turn on the ICE PLUS. feature, which increases icemaking capabilities up to about 20 percent.

❻ LIGHT/FILTER BUTTON

The LIGHT/FILTER button controls the lamp in the dispenser.

The LIGHT/FILTER button resets the water filter replacement indicator when the water filter has been replaced.

❼ ALARM/LOCK BUTTON

Press this button to control the door-open alarm.

Press this button to lock or unlock all the other function buttons on the control panel, including operation of the dispenser.

THE LED DISPLAY

The LED display shows the temperature settings, dispenser options, water filter, door alarm, and locking status messages.

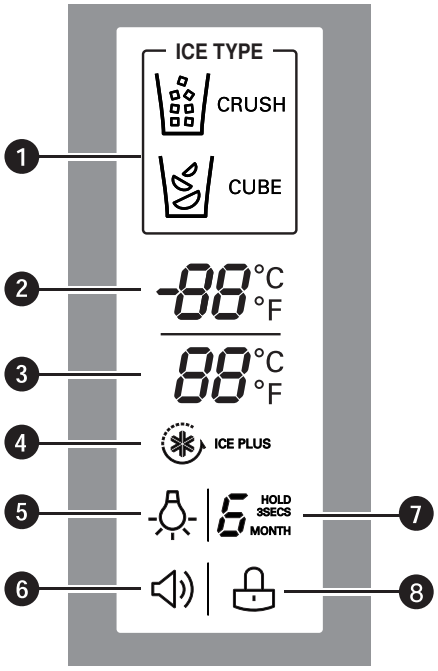

❶ DISPENSER SELECTION INDICATOR

Shows Cubed ice or Crushed Ice selection that will be dispensed when the push switch is pressed.

❷ FREEZER TEMPERATURE

Indicates the set temperature of the freezer compartment in Celsius or Fahrenheit.

❸ REFRIGERATOR TEMPERATURE

Indicates the set temperature of the refrigerator compartment in Celsius or Fahrenheit.

❹ ICE PLUS

When the ICE PLUS button is pressed, the display will indicate the selected function has been activated.

❺ DISPENSER LIGHT INDICATOR

When the LIGHT button is pressed, the display will indicate the selected function: The dispenser light is on, this indicator will appear on the display panel.

❻ DOOR ALARM INDICATOR

This indicator shows that the door-open warning alarm is activated.

❼ WATER FILTER STATUS

This indicator shows the current status for the water filter. See Resetting the Filter Indicator.

❽ LOCK STATUS

This indicator shows the current status for the control panel functions is set to LOCK.

ADJUSTING THE TEMPERATURES AND DISPLAY

Adjust Freezer Temperature

To adjust the temperature in the freezer compartment, press the FREEZER button to cycle through the the range of available settings.

0°F

Adjust Refrigerator Temperature

To adjust the temperature in the refrigerator compartment, press the REFRIGERATOR button to cycle through the range of available settings.

37°F

NOTE: The actual inner temperature varies depending on the food status, since the indicated temperature setting is the target temperature and not the actual temperature within the refrigerator.

Initially set the REFRIGERATOR CONTROL at 37 degrees F and the FREEZER CONTROL at 0 degrees F. Leave them at these setting for 24 hours (one day) to stabilize. Then adjust the compartment temperature as illustrated above.

Temperature Display

To change the temperature display from Fahrenheit to Celsius:

- Simultaneously press and hold the FREEZER and REFRIGERATOR buttons for more than 5 seconds.
- Do the same to convert back to Fahrenheit.

Display Power-Saving Mode

This function places the display into the Power-Saving Mode.

- Simultaneously press the FREEZER and ICE PLUS buttons and hold them for 5 seconds until a tone sounds.
- All LED lights will turn on and then off.
- When the Power-Saving Mode is activated, the display will remain off until the next time the door is opened. The display will also turn on when any button is pressed, and it will remain on for 20 seconds after the last door opening or button selection.
- To deactivate the Power-Saving Mode, press the FREEZER and ICE PLUS buttons simultaneously and hold them for 5 seconds until the tone sounds.

OPERATING THE DISPENSER

DISPENSING CRUSHED ICE

Press the ICE TYPE button to illuminate the Crushed Ice icon.

Press the push ice switch with a glass or other container and crushed ice will be dispensed.

DISPENSING CUBED ICE

Press the ICE TYPE button to illuminate the Cubed Ice icon.

Press the push switch with a glass or other container and cubed ice will be dispensed.

NOTE: Hold the glass or other container in place for a couple of seconds after dispensing ice or water to catch the last few cubes or drops. The dispenser is designed to not operate while either refrigerator door is open.

DISPENSING WATER

Press the push water switch or active water button with a glass or other container and chilled water will be dispensed.

When the water switch or active water switch is pressed, the light will be illuminated.

NOTE: When operating the Water Button, it does not work when you press both ends and not the center. It only works when you press the center of the button.

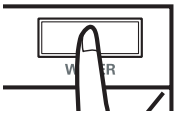

CONTROLLING THE DISPENSER LIGHT

Press the LIGHT/FILTER button to turn the dispenser light on and off.

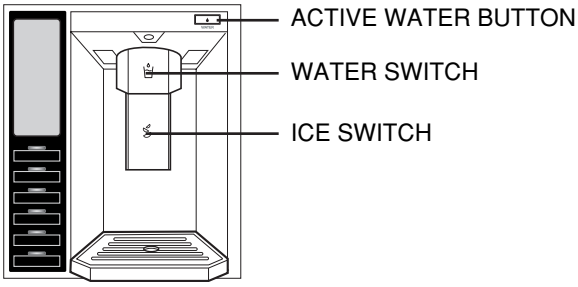

⚠CAUTION

- When filling the container with a small opening, use it near the opening of the water or ice dispenser as close as possible.
- Do not dispense ice into fine china or crystal glasses. China or crystal can break.

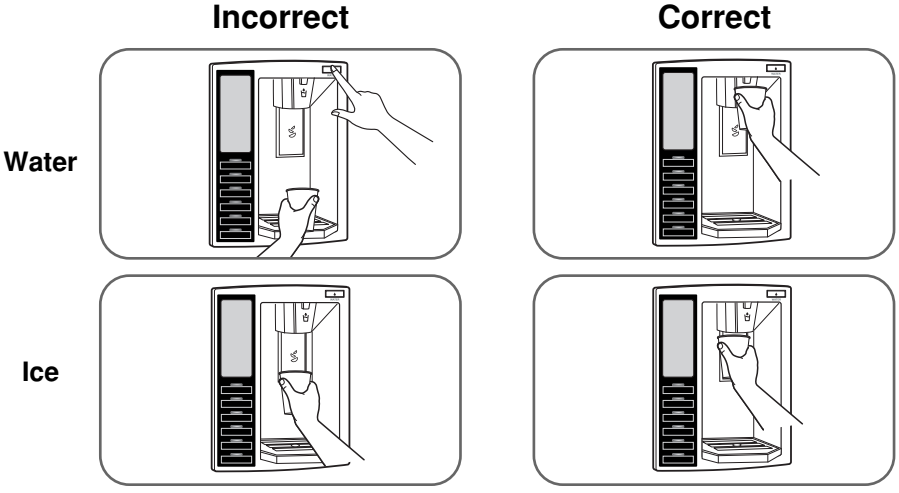

SETTING THE FUNCTIONS

Press the button for the desired function to view and select other settings.

SETTING THE DISPENSER LOCK

Press and hold the ALARM/LOCK button for three seconds to lock the dispenser and all of the other control panel functions. Press and hold again for 3 seconds to unlock.

SETTING THE DOOR ALARM

The ALARM/LOCK button also controls the door alarm that sounds three times in 30-second intervals when a compartment door is left open for more than 60 seconds. The alarm stops sounding when the door is closed.

Press the ALARM/LOCK button once to activate and deactivate the door alarm function.

NOTE: Contact your local service center if the alarm continues to sound after the doors are closed.

RESETTING THE FILTER INDICATOR

Press and hold the LIGHT/FILTER button for more than 3 seconds to reset the filter indicator after the water filter has been replaced.

NOTE: It is recommended that you replace the filter when the water filter indicator light reaches 0 or whenever the water or ice cube taste deteriorates noticeably.

ACTIVATING ICE PLUS

Press the ICE PLUS button once to activate the ICE PLUS function. The ICE PLUS icon on the display panel will illuminate when activated.

The ICE PLUS function runs the freezer compartment at the coldest setting for a 24-hour period to increase icemaking by up to about 20%, and then turns off automatically.

NOTE: Press the button again to cancel the ICE PLUS function.

DIAGNOSTIC FAILURE DETECTION

The diagnostic function automatically detects problems with your refrigerator, and a diagnostic code will appear in the display. **NOTE:** If a diagnostic code appears in the display during use, note the code and then call **1-888-542-2623** (24 hours per day/7 days per week) and select the option to locate an authorized servicer.

IN-DOOR ICE BIN

⚠CAUTION

- Keep hands and tools out of the ice bin door and dispenser chute. You could break something or injure yourself.

The icemaker will stop producing ice when the ice bin is full. If you need more ice, empty the ice bin into the extra ice bin in the freezer compartment so the icemaker can keep producing ice.

Shake the ice bin occasionally to level the ice in it. Sometimes the ice piles up near the icemaker, causing the icemaker to misread the amount of ice cubes and stop producing ice.

NOTE: Storing cans or other items in the ice bin may damage the icemaker.

Keep the ice bin door closed tightly. If the ice bin door is not closed tightly, the cold air in the ice bin will freeze food in the refrigerator compartment. This could also cause the icemaker to not produce ice.

NOTE: If the On/Off switch on the icemaker is set to Off for an extended time, the ice compartment will gradually warm up to the temperature of the refrigerator compartment. To prevent ice cubes from melting and leaking from the dispenser, ALWAYS empty the ice bin when the icemaker is set to Off for more than a few.

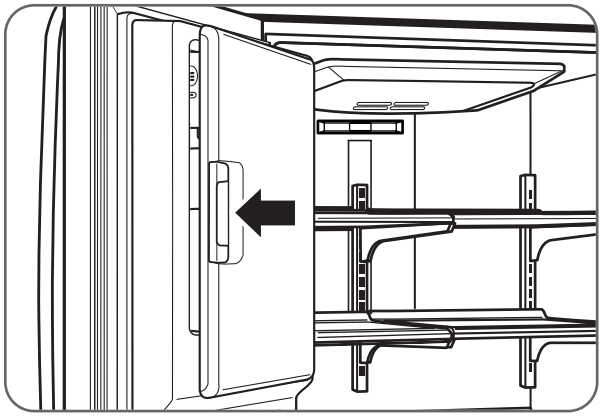

Push on the latch firmly where noted to close the ice bin door; it will make a clicking sound when it is closed completely.

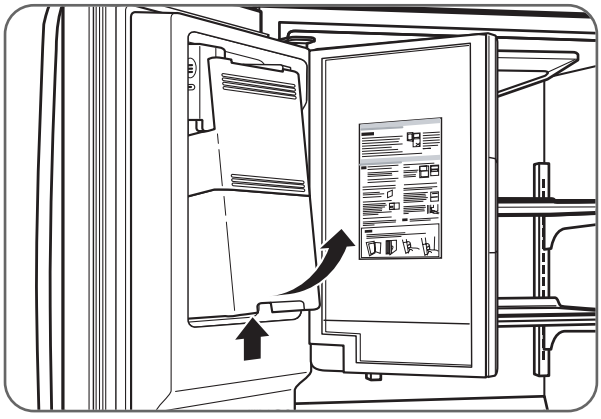

To remove the in-door ice bin, grip the front handle, slightly lift the lower part, and slowly pull out the bin as shown.

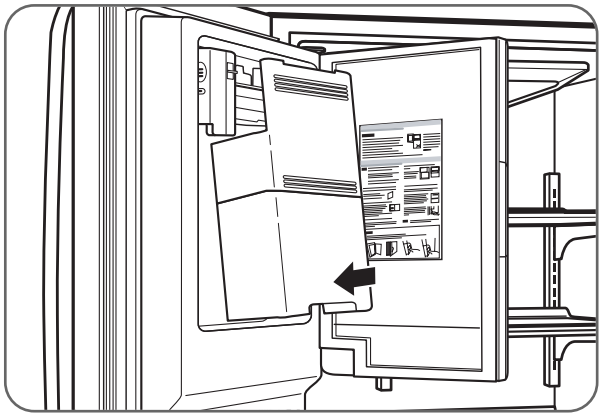

To reinstall the in-door ice bin, slightly slant the bin during replacement to avoid contact with the icemaker.

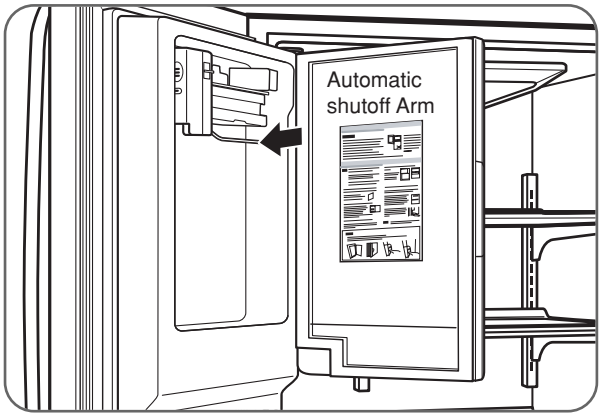

Avoid touching the automatic shutoff arm when replacing the ice bin. See the label on the ice bin door for details.

AUTOMATIC ICEMAKER

Ice is made in the automatic icemaker and sent to the dispenser. The automatic icemaker can make 6 ice cubes at a time, 80–130 cubes per 24-hour period. This quantity may vary by circumstance, including freezer compartment temperature, room temperature, number of door openings, freezer load, and other operating conditions.

- It takes about 12 to 24 hours for a newly installed refrigerator to make ice.
- Icemaking stops when the ice storage bin is full.
- To turn off the automatic icemaker, set the icemaker switch to OFF (O). To turn on the automatic icemaker, set the switch to ON (I).
- The cube size will vary depending on the Water Amount Selection Setting, as well as the water pressure of the connected water line.
- You can regulate the cube size by pressing the Water Amount Selection Button.

NOTE: It is normal that a noise is produced when ice drops into the ice storage bin.

- Even when the water pipe is not connected and the Ice Maker is turned on, the water valve operates. The noise is generated because the water pipe is not connected, which does not mean the icemaker is defective.

⚠WARNING

Personal Injury Hazard

- Avoid contact with the moving parts of the ejector mechanism or with the heating element that releases the cubes.
- DO NOT place fingers or hands on the automatic icemaking mechanism while the refrigerator is plugged in.

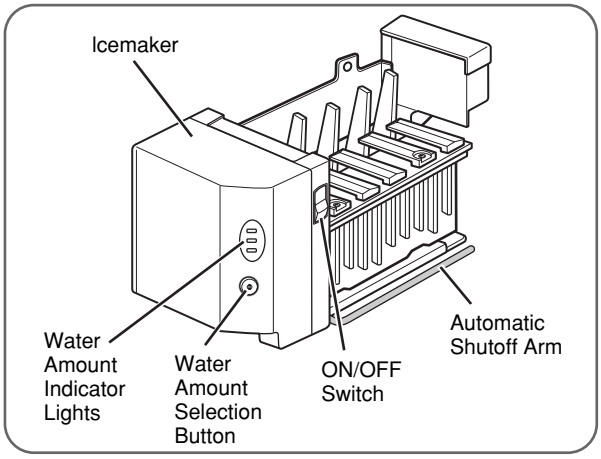

NOTE: Raising the automatic shutoff arm does not turn off the icemaker.

⚠CAUTION

- The first ice and water may include particles or odor from the water supply line or the water tank.
- Throw away the first few batches of ice (about 20 pieces) and purge the water line for 2 minutes after installation to eliminate air and odd tastes.
- This is also necessary if the refrigerator has not been used for a long time.
- Never store beverage cans or other foods in the ice bin for the purpose of rapid cooling. Doing so may damage the icemaker or the containers may burst.
- If discolored ice is dispensed, check the water filter and water supply. If the problem continues, contact an Authorized Service Center. Do not use the ice or water until the problem is corrected.
- Keep children away from the dispenser. Do not allow children to play in or around dispenser.
- The ice passage may also become blocked with frost if only crushed ice is used. Remove the frost that accumulates.
- Never use thin crystal glass or crockery to collect ice. Such glasses or containers may break, and glass fragments could be in the ice.
- Dispense ice into a glass before filling it with water or other beverages. Splashing may occur if ice is dispensed into a glass that already contains liquid.
- Never use a glass that is exceptionally narrow or deep. Ice may jam in the ice passage and refrigerator performance may be affected.
- Keep the glass at a proper distance from the ice outlet. A glass held too close to the outlet may prevent ice from dispensing.
- To avoid personal injury, keep hands out of the ice door and passage.
- Never remove the icemaker cover.
- If you find ice or water dispensed unexpectedly, turn off the water supply and contact an Authorized Service Center. Call **1-888-542-2623** (24 hours a day, 365 days a year) and select the option to locate an authorized servicer.

STORING FOODS

- Store fresh food in the refrigerator compartment.
- How food is frozen and thawed is an important factor in maintaining freshness and flavor.
- Do not store food that spoils easily, such as bananas and melons, at low temperatures.
- Allow hot food to cool prior to storing; placing hot food in the refrigerator could spoil other food and lead to higher energy consumption.
- When storing food, cover it with vinyl wrap or store in a container with a lid. This prevents moisture from evaporating and helps food to keep its flavor and nutrition.
- Do not block air vents with food or containers. Smooth circulation of chilled air keeps the refrigerator temperatures even.
- Do not open the doors frequently. Opening the doors allows warm air to enter the refrigerator and freezer compartments, which causes temperatures to rise.
- Never overload the door racks; overloading may push against the inner racks and prevent the doors from closing correctly.

Freezer compartment

- Do not store glass bottles in the freezer compartment; glass may break when the contents are frozen.
- Do not refreeze food that has been thawed. This causes loss of flavor and nutrition.
- Do not touch cold foods or containers, especially those made of metal, with wet hands or place glass products in the freezer compartment.

Refrigerator compartment

- Avoid placing moist food on the top refrigerator shelves; it could freeze from direct contact with chilled air.
- Always clean food prior to refrigeration. Vegetables and fruits should be washed and wiped and packed food should be wiped to prevent adjacent food from spoiling.

NOTE: If you keep the refrigerator in a hot and humid place, frequent opening of the door or storing a lot of vegetables in the refrigerator may cause condensation to form. Wipe the condensation with a clean cloth or a paper towel.

LOCATION OF FOODS

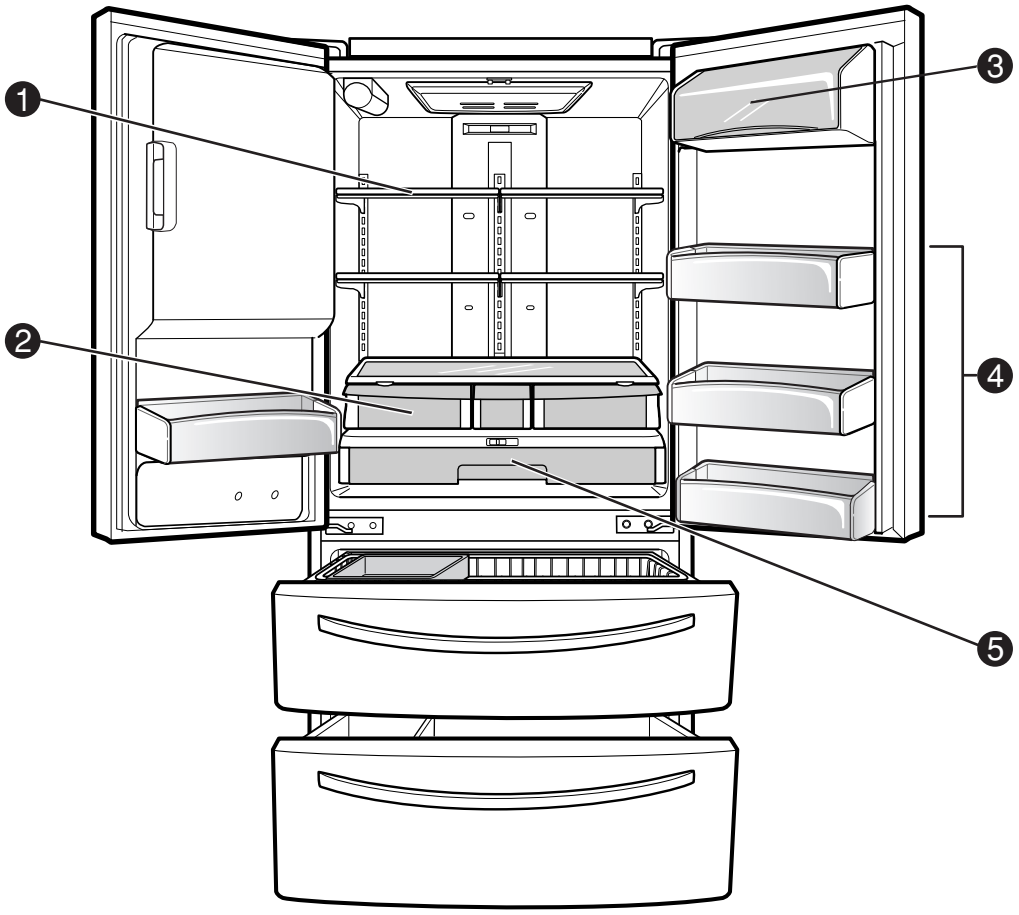

1 REFRIGERATOR COMPARTMENT SHELVES

Store larger food items, platters, and containers on the expansive refrigerator compartment shelves.

2 CRISPERS

Store vegetables or fruits with humidity control.

3 DAIRY CORNER

Store milk products such as butter and cheese.

4 MODULAR REFRIGERATOR DOOR BINS

Store small packed food or beverages such as condiments, salad dressings, baby foods, milk, or juice.

5 GLIDE'N'SERVE

Provides storage space with a variable temperature control that keeps the compartment colder than refrigerator.

SHELF HEIGHT ADJUSTMENT

The shelves in your refrigerator are adjustable to meet your individual storage needs.

Storing similar food items together in your refrigerator and adjusting the shelves to fit different heights of items will make finding the exact item you want easier; it will also reduce the amount of time the refrigerator door is open, saving energy.

IMPORTANT: Do not clean glass shelves with warm water when they are cold. Shelves may break if exposed to sudden temperature changes or impact, such as bumping. For your protection, glass shelves are made with tempered glass, which will shatter into small, pebble-sized pieces.

NOTE: Glass shelves are heavy. Use special care when removing them to avoid dropping them.

Adjusting Shelves

Remove shelves from the shipping position and place shelves in the position you want.

⚠CAUTION

Make sure that shelves are level from one side to the other. Failure to do so may result in the shelf's falling or spilling food.

Remove Shelf

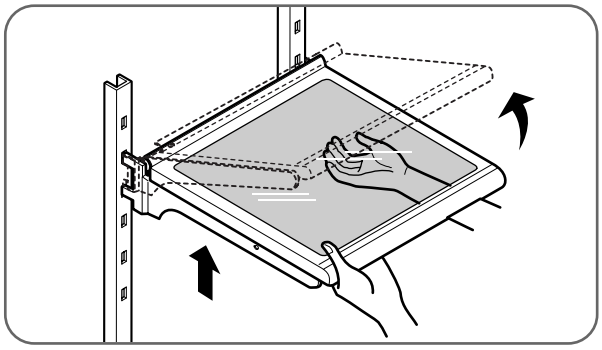

Tilt up the front of the shelf. Lift up the back and pull out the shelf.

Reinstall Shelf

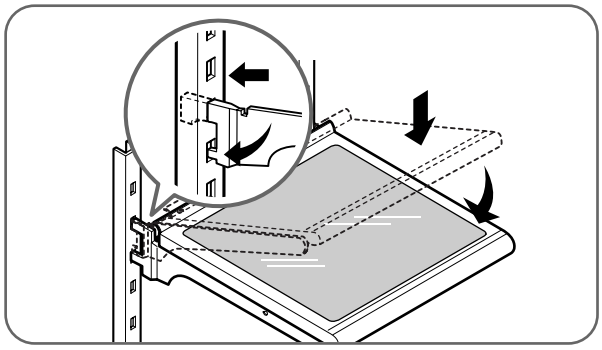

Tilt up the front of the shelf and guide the shelf hooks into the slots at a desired height. Then lower the front of the shelf so that the hooks drop into the slots.

Folding Shelf

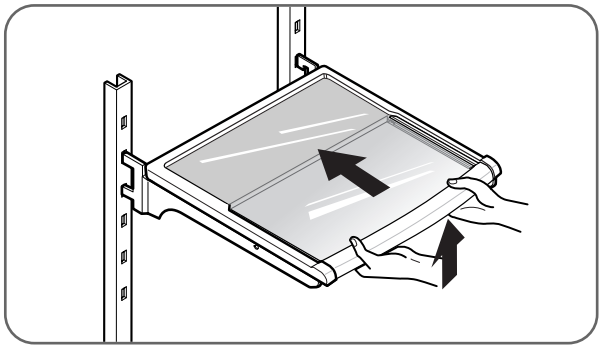

You can store taller items such as a gallon container or bottles by simply pushing the front half of shelf underneath back half of shelf. Pull toward you to returm to a full shelf.

REMOVING AND REPLACING COMPONENTS

NOTE: When reinstalling components, reverse the order of steps for removal. To prevent damage, never use excessive force when removing or reinstalling components.

⚠CAUTION

- Crispers, Door Bins and interior shelves are not dishwasher safe.

⚠CAUTION

- Personal injury can occur if the door bins are not firmly assembled.
  NOTE: DO NOT adjust a loaded bin.
- DO NOT allow children to play with baskets. The sharp corners on the baskets could cause injury.

Dairy Bin

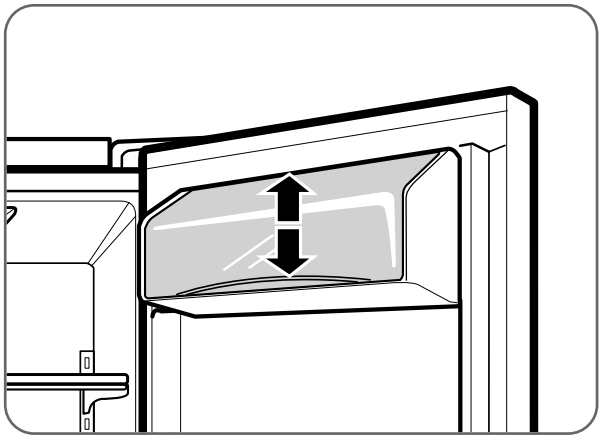

To remove the dairy bin, simply lift it and pull straight out. To replace the dairy bin, slide it into place and push down until it stops.

NOTE: The dairy bin will only fit in the top space on the right-hand door.

Modular Door Bin

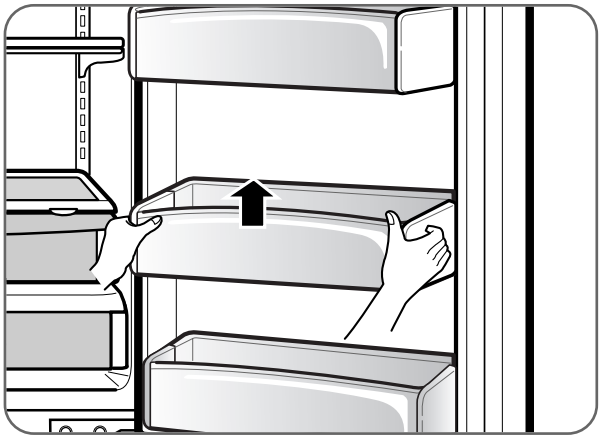

The door bins are removable for easy cleaning and adjusting. Simply lift the bin and pull it straight out to remove it. To replace the bin, slide it in above the desired support button and push down until it stops.

Dispenser Drip Tray

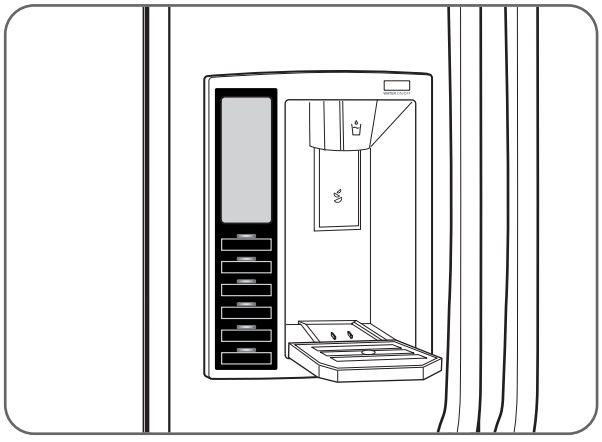

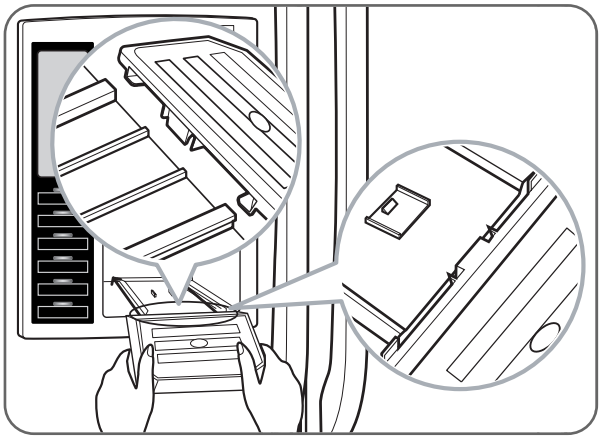

The dispenser drip tray has no self-draining function. It should be cleaned regularly.
Remove the cover by pressing and pulling the tray.
Dry it with a cloth. To reinstall the tray, slightly tilt the front of the tray and snap the ribs into the holes.

REMOVING AND REPLACING COMPONENTS (CONT.)

Crisper humidity control

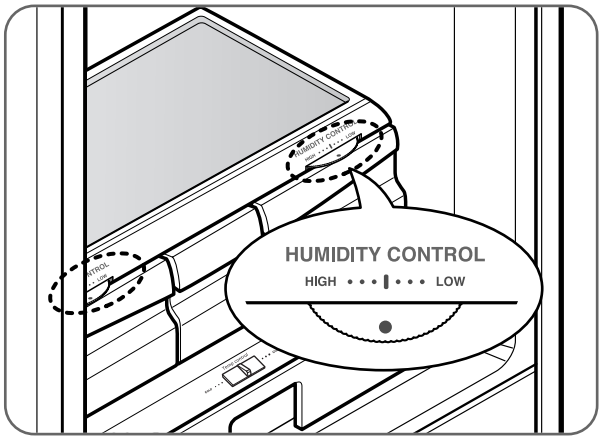

You can control the amount of humidity in the moisture-sealed crispers. Store vegetables or fruits requiring more or less humidity in separate crispers. Adjust the control to any setting between HIGH and LOW.

- LOW lets moist air out of the crisper for best storage of fruits.
- HIGH keeps moist air in the crisper for best storage of fresh, leafy vegetables.

CAUTION : The glass shelf over the crisper is not firmly secured. Be careful when tilting.

Removing crisper

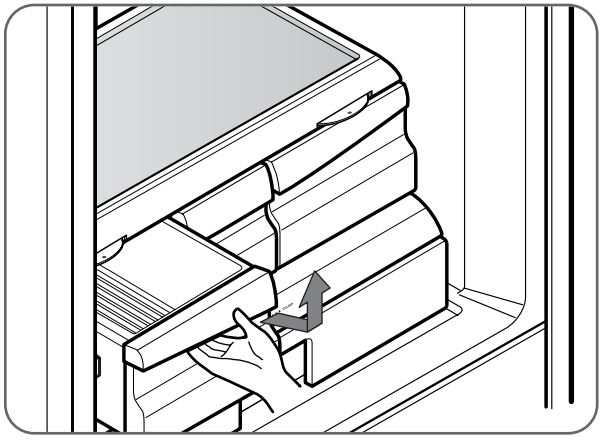

- To remove, pull the drawer out to full extension.
- Lift the front of the crisper up, then pull it straight out.
- To install, slightly tilt up the front and insert the drawer into the frame and push it back into place.

To remove the glass

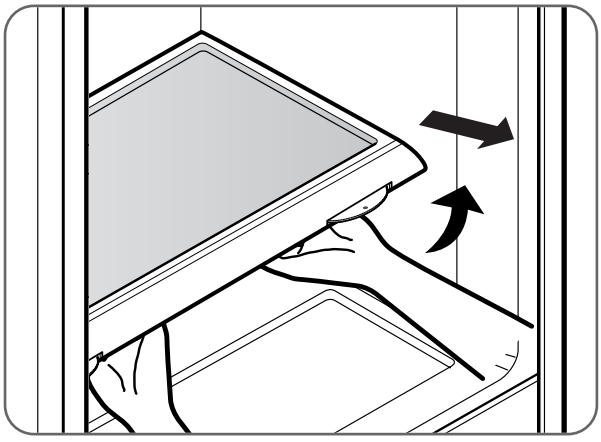

- Lift up the glass under the crisper cover.
- Pull the glass up and out.

Glide'N'Serve

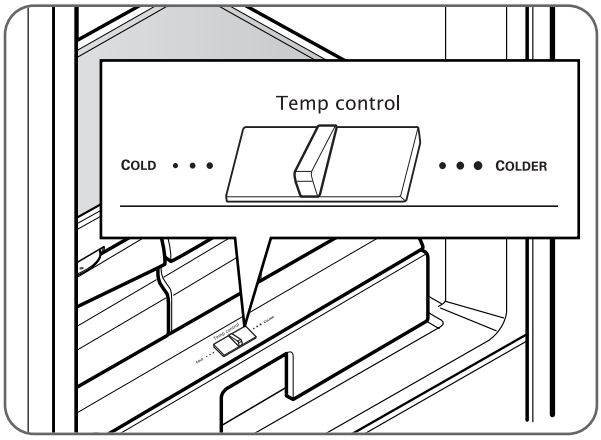

The Glide'N'Serve provides storage space with a variable temperature control that keeps the compartment colder than refrigerator.

This drawer can be used for large party trays, deli items, or beverages. (but this drawer can't be used for vegetable.)

Controls

The control regulates the air temperature in the drawer. Set control level to COLD (print on surface) to provide normal refrigerator temperature. Use the COLDER (print on surface) setting for meats or other deli items.

NOTE: Cold air directed to the Glide'N'Serve can decrease refrigerator temperature. Refrigerator control may need to be adjusted.

REMOVING AND REPLACING COMPONENTS (CONT.)

To replace Glide'N'Serve

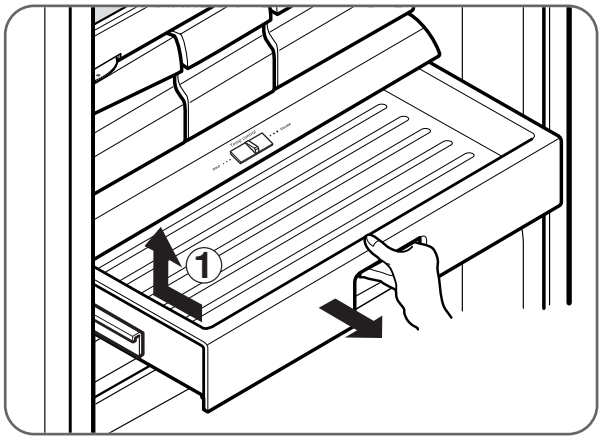

- To remove, pull the drawer out to full extension.
- Lift the front of the drawer up, then pull it straight out.
- To install, slightly tilt up the front and insert the drawer into the frame and push it back into place.

⚠CAUTION

- Pinch hazard! Keep hands and feet clear of the bottom of the door when opening and closing.

⚠WARNING

Child Entrapment Hazard

- If the Durabase divider is removed, there is enough open space for children or pets to crawl inside. To prevent accidental child and pet entrapment or suffocation risk, DO NOT allow them to play inside of drawer.

Ice Bin

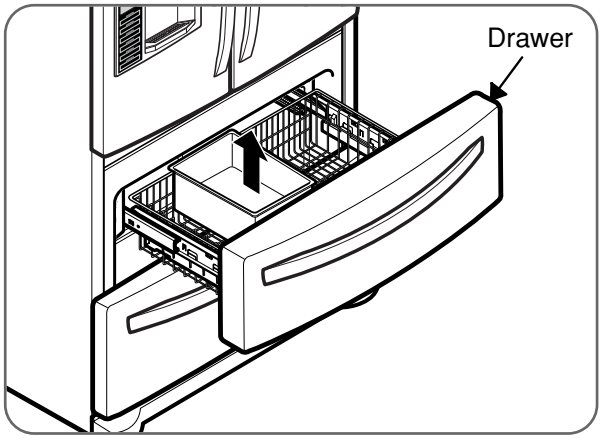

To separate the ice bin, pull out the drawer to full extension. Gently lift and pull out the ice bin.
To reinstall, simply set the ice bin in its correct position.

DuraBase ® Divider

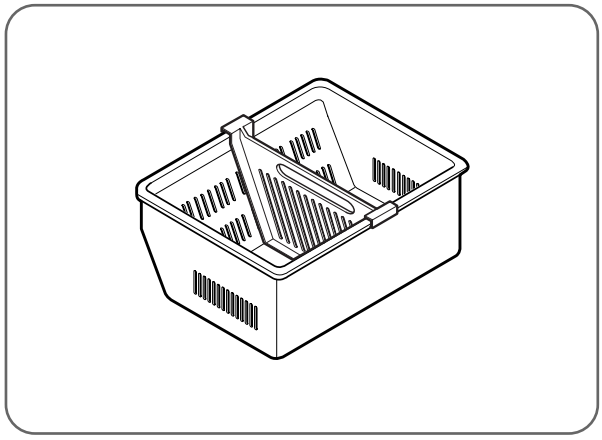

CLEANING THE REFRIGERATOR

⚠WARNING

Explosion Hazard

- **Use nonflammable cleaner.**
- **Failure to do so can result in death, explosion, or fire.**

Both the refrigerator and freezer sections defrost automatically. However, clean both sections about once a month to prevent odors. Wipe up spills immediately.

- Unplug the refrigerator.
- Remove all removable parts, such as shelves and crispers.
- Use a clean sponge or soft cloth and a mild detergent in warm water. Do not use abrasive or harsh cleaners.
- Hand wash, rinse, and thoroughly dry all surfaces.
- Plug in the refrigerator.

NOTE: Window sprays, abrasive cleaners, or flammable fluids can scratch or damage plastic covers or panels.

Cleaning the Exterior

For models with a stainless steel exterior, use a commercially available stainless steel cleaner in accordance with the manufacturer's instructions.

You may also use a clean sponge or soft cloth and a mild detergent in warm water. Do not use abrasive or harsh cleaners. Dry thoroughly with a soft cloth.

IMPORTANT: Do not use cleaning waxes, concentrated detergents, or cleaners containing petroleum on plastic refrigerator parts such as door liners or gaskets.

Care and Cleaning of the Interior

NOTE: Allow the freezer to warm so the cleaning cloth will not stick.

To help remove odors, you can wash the inside of the refrigerator with a mixture of baking soda and warm water. Mix 2 tbsp. baking soda to 1 qt. of water (26 g soda to 1 L of water). Be sure the baking soda dissolves completely so it does not scratch the surfaces of the refrigerator.

IMPORTANT: Do not use a spray nozzle to clean the interior.

GENERAL INFORMATION

Storage

During average-length vacations, you will probably find it best to leave the refrigerator in operation. Place freezable items in the freezer for longer life.

When you plan to store the refrigerator, remove all food, disconnect the power cord, clean the interior thoroughly, and block the doors open to prevent mold and mildew. Be certain the stored refrigerator does not present a child entrapment danger.

Moving

Unload the refrigerator to move it. (This is probably not necessary when pulling it out to clean behind it.) Be sure to let the refrigerator warm up to room temperature, and dry the inside before closing the doors to pack it for moving. To avoid damaging the height-adjusting screws, turn them all the way into the base.

Power Failure

Most power failures that are corrected within an hour or two will not affect your refrigerator temperatures. However, you should minimize the number of door openings while the power is off.

Water may drip from the ice bin during a power outage. To prevent this, remove the ice bin, discard all of the ice, towel dry, and replace.

REPLACING THE WATER FILTER

It is recommended that you replace the filter when the water filter indicator reaches **0** or the water dispenser or icemaker noticeably decreases production.

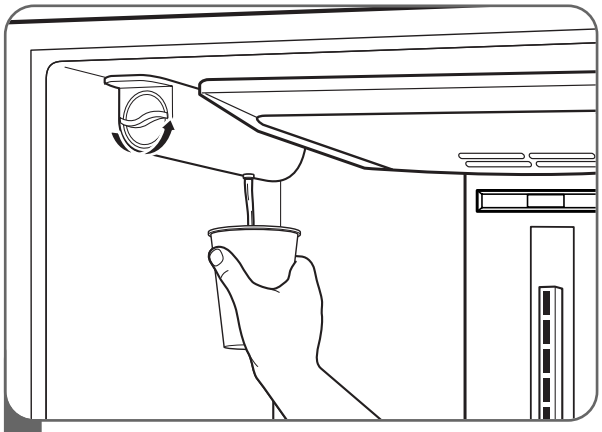

1 Rotate the knob of the old cartridge counterclockwise. When the cartridge is released, you will feel it click out of place.

NOTE: Replacing the filter causes a small amount of water (around 1 oz. or 25 cc) to drain. Place a cup under the filter hole to contain it.

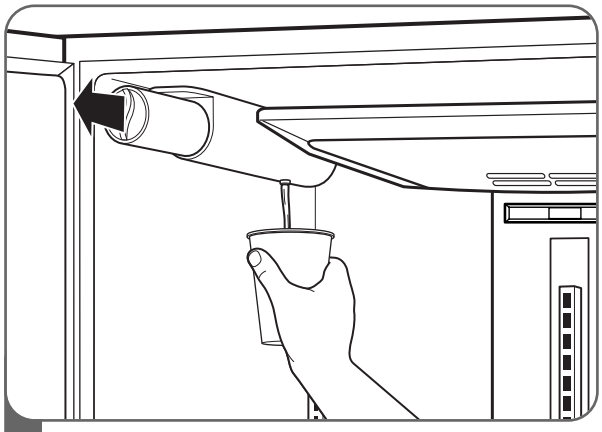

2 Remove the old cartridge. Take the new cartridge out of its packaging, and remove the protective cover from the o-rings. Hold the cartridge handle in its vertical position, and firmly push the new filter cartridge into place until it stops.

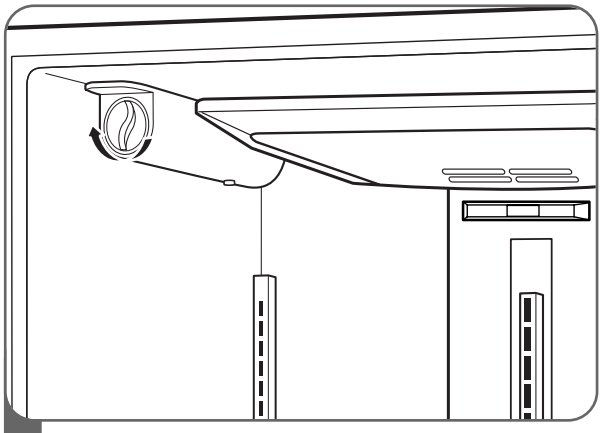

1 Use the handle to twist the cartridge clockwise about one turn, until the handle is in a horizontal position. You will feel the filter click into place.

NOTE: If the filter will not turn from side to side, it isn't fully inserted.

After replacing the filter, dispense for 2 minutes from the water dispenser to purge the water system. Check the filter for leaks.

When the water filter indicator displays the message **0 Filter Month, Hold 3 Seconds**, reset the water filter status display and indicator light by pressing and holding the LIGHT/FILTER button for more than 3 seconds.

To purchase replacement water filter cartridges, visit your local appliance dealer or parts distributor.

You can also visit our website: www.lg.ca or 1-888-542-2623 (1-888-LG-CANADA)

The replacement water filter cartridge's part number is **5231JA2006A**.

BEFORE CALLING FOR SERVICE

Before calling for service, review this list. It may save you both time and expense. This list includes common occurrences that are not the result of defective workmanship or materials in this appliance.

Problem	Possible Causes	Solutions
Refrigerator compressor does not run.	• Refrigerator control is off. • Refrigerator is in defrost cycle. • Plug at the wall outlet is disconnected. • Power outage. Check house lights.	• Set the refrigerator control. • This is normal for a fully automatic defrosting refrigerator. The defrost cycle occurs periodically. • Make sure the plug is tightly pushed into the outlet. • Call the local electric company.
Refrigerator runs too frequently or too long.	• Refrigerator is larger than the previous one you owned. • The room or the outdoor weather is hot. • Refrigerator was recently disconnected for a while. • Large amounts of warm or hot food may have been stored recently. • Doors are opened too frequently or for too long. • Refrigerator or freezer door may be slightly open. • Refrigerator control is set too cold. • Refrigerator or freezer gasket is dirty, worn, cracked, or poorly fitted.	• This is normal. Larger, more efficient units run longer. • It is normal for the refrigerator to work longer under these conditions. • It takes a few hours for the refrigerator to reach cooling temperatures. • Warm food will cause the refrigerator to run longer until the desired temperature is reached. • Warm air entering the refrigerator causes it to run more. Open the door less often. • Make sure the refrigerator is level. Keep food and containers from blocking the door. • Adjust the refrigerator control to a warmer setting until the refrigerator temperature is satisfactory. • Clean or change the gasket. Leaks in the door seal will cause the refrigerator to run longer in order to maintain desired temperatures.
Refrigerator compressor cycles on and off.	• The thermostat is keeping the refrigerator at a constant temperature.	• This is normal. The refrigerator cycles on and off to keep the temperature constant.
Temperature in the freezer is too cold, but the refrigerator temperature is satisfactory.	• Freezer control is set too cold.	• Adjust the freezer control to a warmer setting until the freezer temperature is satisfactory.
Temperature in the refrigerator is too cold, but the freezer temperature is satisfactory.	• Refrigerator control is set too cold.	• Adjust the refrigerator control to a warmer setting.

BEFORE CALLING FOR SERVICE (CONT.)

Problem	Possible Causes	Solutions
Food stored in refrigerator drawers freezes.	• Refrigerator control is set too cold.	• Adjust the refrigerator to a warmer setting.
Temperatures in the refrigerator or freezer are too warm.	• Freezer or refrigerator control is set too warm. • Doors are opened too frequently or for too long. • Door is slightly open. • Large amounts of warm or hot food may have been stored recently. • Refrigerator has recently been disconnected for a period of time.	• Adjust the freezer or refrigerator control to a colder setting until the freezer or refrigerator temperature is satisfactory. • Warm air enters the refrigerator/freezer whenever the door is opened. Open the door less often. • Close the door completely. • Wait until the refrigerator or freezer has had a chance to cool food to the set temperature. • It takes a few hours for the refrigerator to reach the set temperatures.
Temperature in the refrigerator is too warm, but the freezer temperature is satisfactory.	• Refrigerator control is set too warm.	• Adjust the refrigerator control to a colder setting.
Louder sound levels when compressor comes on.	• Refrigerator operates at higher pressures during the start of the ON cycle.	• This is normal.
Vibrating or rattling noise.	• Floor is uneven or weak. The refrigerator rocks on the floor when it is moved slightly. • Items placed on the top of the refrigerator are vibrating. • Dishes are vibrating on the shelves in the refrigerator. • The refrigerator is touching the wall or cabinets.	• Be sure floor is level and solid and can adequately support the refrigerator. • Remove items. • It is normal for dishes to vibrate slightly. Move dishes slightly. Make sure refrigerator is level and firmly set on floor. • Move the refrigerator so that it does not touch the wall.
Moisture collects on the inside walls of the refrigerator.	• The weather is hot and humid which increases the rate of frost buildup and internal sweating. • Door is slightly open. • Door is opened too often or for too long.	• This is normal. • Close the door. • Open the door less often.
Moisture forms on the outside of the refrigerator or between the doors.	• Weather is humid. • Door is slightly open.	• This is normal in humid weather. When humidity is lower, the moisture should disappear. • Close the door completely.

BEFORE CALLING FOR SERVICE (CONT.)

Problem	Possible Causes	Solutions
Moisture forms on the dispenser.	• Moisture may form when the temperature or humidity are high.	• Wipe off the moisture.
Odors in the refrigerator.	• Interior needs to be cleaned. • Food with strong odor is in the refrigerator. • Some containers and wrapping materials produce odors.	• Clean interior with sponge, warm water, and baking soda. Be sure the soda is completely dissolved so it will not act as an abrasive compound. • Cover food completely. • Use a different container or brand of wrapping materials.
The door(s) will not close.	• Food package is keeping the door open. • Door was closed too hard, causing other door to open slightly. • Refrigerator is not level. It rocks on the floor when it is moved slightly. • Floor is uneven or weak. The refrigerator rocks on the floor when it is moved slightly. • Refrigerator is touching the wall or the cabinets.	• Move the packages that keep the door from closing. • Gently close both doors. • Adjust the height-adjusting screw. • Be sure the floor is level and can adequately support the refrigerator. Contact a carpenter to correct sagging or sloping floor. • Move the refrigerator.
Drawers are difficult to move.	• Food is touching the shelf on top of the drawer. • The drawer track is dirty.	• Keep less food in the drawer. • Clean the drawer and the track.
The dispenser will not dispense water.	• The household water-line valve is not open. • The refrigerator or freezer door is not closed. • When a installed tube is bent. • When a filter is old.	• Open the household water-line valve. • Be sure both doors are closed. • Check the installed tube. • Replace with a new filter.
Water has an odd taste and/or odor.	• The water has been in the tank for too long. • The unit is not properly connected to cold water line. • When a filter is old.	• Dispense for 2 minutes and discard to freshen the supply. Dispense and discard for an additional 2 minutes to rinse the tank completely. • Connect the unit to a cold water line that supplies water to the kitchen faucet. • Replace with a new filter.

BEFORE CALLING FOR SERVICE (CONT.)

Problem	Possible Causes	Solutions
The dispenser will not dispense ice.	• The ice storage bin is empty.	• When the first supply of ice is dropped into the bin, the dispenser should operate.
	• The household water line valve is not open.	• Open the household water line valve and allow sufficient time for ice to be made. When ice is made, the dispenser should operate.
	• The refrigerator or freezer door is not closed.	• Be sure both of the doors are closed.
	• Ice has melted and frozen around the auger due to infrequent use, temperature fluctuations, and/or power outages.	• Remove the ice storage bin and thaw the contents. Clean the bin, wipe it dry, and replace it in its proper position. When new ice is made, the dispenser should operate.
	• Ice cubes are jammed between the icemaker arm and the back of the bin.	• Remove the ice cubes that are jamming the dispenser.
	• Ice cubes are frozen together.	• Use the dispenser often to prevent the cubes from freezing together.
	• Ice cubes that have been purchased or made in some other way have been used in the dispenser.	• Only the ice cubes made by the icemaker should be used with the dispenser.
	• Water input tube is bent.	• Check the installed tube
	• Filter is old or needs changing	• Replace with a new filter.
Sound of ice dropping.	• A batch of ice has been released into the ice bin.	• This sound is made when automatically made ice is dropped into the ice storage bin. The volume may vary according to the location of the refrigerator.
Sound of water trickling.	• The icemaker is being supplied with water.	• This sound is normally made when the icemaker is supplied with water after dropping the automatically made ice. • If this sound lasts more than 10 seconds, check for a leak.
Other	Please thoroughly read the Automatic Icemaker and Operating the Dispenser sections in this manual.	

KEY DIMENSIONS AND SPECIFICATIONS

The appearance and specifications listed in this guide may vary due to constant product improvements.

Bottom-Freezer Refrigerator Model LMX25981	
Description	French Door Refrigerator
Electrical Requirements	115 VAC @ 60 Hz
Min. / Max. Water Pressure	21~121 PSI (1.5~8.5 kgf/cm^2)
Dimensions	35 3/4" (W) X 34 1/4" (D) X 69 3/4" (H), 46 1/2" (D w/ door open) 908 mm (W) X 870 mm (D) X 1772 mm (H), 1181 mm (D w/ door open)
Net Weight	324 lb. (147 kg)
Refrigerator Storage Capacity	17.6 cu. ft.
Freezer Storage Capacity	7.1 cu. ft.

Bottom-Freezer Refrigerator Model LMX21981	
Description	French Door Refrigerator
Electrical Requirements	115 VAC @ 60 Hz
Min. / Max. Water Pressure	21~121 PSI (1.5~8.5 kgf/cm^2)
Dimensions	35 3/4" (W) X 30 1/4" (D) X 69 3/4" (H), 42 1/4" (D w/ door open) 908 mm (W) X 768 mm (D) X 1772 mm (H), 1073 mm (D w/ door open)
Net Weight	288 lb. (131 kg)
Refrigerator Storage Capacity	14.7 cu. ft.
Freezer Storage Capacity	5.8 cu. ft.

LG ELECTRONICS, INC.
LG REFRIGERATOR LIMITED WARRANTY - USA

Should your LG Refrigerator ("Product") fail due to a defect in materials or workmanship under normal home use, during the warranty period set forth below, LG will at its option repair or replace the product. This limited warranty is valid only to the original retail purchaser of the product and applies only when purchased and used within the United States including U.S. Territories. Proof of original retail purchase is required to obtain warranty service under this limited warranty.

WARRANTY PERIOD		
Refrigerator	**Sealed System (Compressor, Condenser, and Evaporator only)**	
One (1) year from the date of original retail purchase	**One (1) year from the date of original retail purchase**	**Seven (7) years from the date of original retail purchase**
Parts and Labor (internal/functional parts only)	Parts and Labor	Parts only (Consumer will be charged for labor)

▶ Replacement products and parts are warranted for the remaining portion of the original warranty period or ninety (90) days, whichever is greater.

▶ Replacement products and parts may be new or remanufactured.

THIS WARRANTY IS IN LIEU OF ANY OTHER WARRANTY, EXPRESS OR IMPLIED, INCLUDING WITHOUT LIMITATION, ANY WARRANTY OF MERCHANTABILITY OR FITNESS FOR A PARTICULAR PURPOSE. TO THE EXTENT ANY IMPLIED WARRANTY IS REQUIRED BY LAW, IT IS LIMITED IN DURATION TO THE EXPRESS WARRANTY PERIOD ABOVE. NEITHER THE MANUFACTURER NOR ITS U.S. DISTRIBUTOR SHALL BE LIABLE FOR ANY INCIDENTAL, CONSEQUENTIAL, INDIRECT, SPECIAL, OR PUNITIVE DAMAGES OF ANY NATURE, INCLUDING WITHOUT LIMITATION, LOST REVENUES OR PROFITS, OR ANY OTHER DAMAGE WHETHER BASED IN CONTRACT, TORT, OR OTHERWISE. Some states do not allow the exclusion or limitation of incidental or consequential damages or limitations on how long an implied warranty lasts, so the above exclusion or limitation may not apply to you. This warranty gives you specific legal rights and you may also have other rights that vary from state to state.

THIS LIMITED WARRANTY DOES NOT COVER:

1. Service trips to deliver, pick up, install, or repair the product; instruct the customer on operation of the product; repair or replace fuses or correct wiring or plumbing, or correction of unauthorized repairs/installation.
2. Failure of product to perform during power failures and interruptions or inadequate electrical service.
3. Damage caused by leaky or broken water pipes, frozen water pipes, restricted drain lines, inadequate or interrupted water supply or inadequate supply of air.
4. Damage resulting from operating the product in a corrosive atmosphere or contrary to the instructions outlined in the product owner's manual.
5. Damage to the product caused by accidents, pests and vermin, lightning, wind, fire, floods, or acts of God.
6. Damage resulting from misuse, abuse, improper installation, repair, or maintenance. Improper repair includes use of parts not approved or specified by LG.
7. Damage or failure caused by unauthorized modification or alteration, or if it is used for other than the intended purpose, or any water leakage where the unit was not properly installed.
8. Damage or failure caused by incorrect electrical current, voltage, or plumbing codes, commercial or industrial use, or use of accessories, components, or consumable cleaning products that are not approved by LG.
9. Damage caused by transportation and handling, including scratches, dents, chips, and/or other damage to the finish of your product, unless such damage results from defects in materials or workmanship and is reported within one (1) week of delivery (Call: 1-800-243-0000).
10. Damage or missing items to any display, open box, discounted, or refurbished product.
11. Products with original serial numbers that have been removed, altered, or can not be readily determined. Model and Serial numbers, along with original retail sales receipt, are required for warranty validation.
12. Increases in utility costs and additional utility expenses.
13. Replacement of light bulbs, filters, or any consumable parts.
14. Repairs when your product is used in other than normal and usual household use (e.g. commercial use, offices, and recreational facilities) or contrary to the instructions outlined in the product owner's manual.
15. Costs associated with removal of your product from your home for repairs.
16. The removal and reinstallation of the product if it is installed in an inaccessible location or is not installed in accordance with published installation instructions, including LG's owner's and installation manuals.
17. Shelves, door bins, drawers, handles, accessories, and other parts besidesÄthose that were originally included with this particular model.

The cost of repair or replacement under these excluded circumstances shall be borne by the consumer.

For complete warranty details and customer assistance, please call or visit our website:

Call 1-800-243-0000 (24 hours a day, 365 days a year) and select the appropriate option from the menu, or visit our website at **http://us.lgservice.com**
Or by mail: LG Customer Information Center:
P. O. Box 240007, 201 James Record Road Huntsville, Alabama 35813
ATTN: CIC

Write your warranty information below:

Product Registration Information:

Model: _____
Serial Number: _____
Date of Purchase: _____

LG ELECTRONICS CANADA, INC.
LG REFRIGERATOR LIMITED WARRANTY - Canada

WARRANTY: Should your LG Refrigerator ("**Product**") fail due to a defect in material or workmanship under normal home use during the warranty period set forth below, LG Canada will at its option repair or replace the Product upon receipt of proof of original retail purchase. This warranty is valid only to the original retail purchaser of the product and applies only to a Product distributed in Canada by LG Canada or an authorized Canadian distributor thereof. The warranty only applies to Products located and used within Canada.

WARRANTY PERIOD: (Note: If the original date of purchase can not be verified, the warranty will begin sixty (60) days from the date of manufacture)		
Refrigerator/Freezer	**Sealed System (Compressor, Condenser, and Evaporator only)**	
One (1) year from the date of original retail purchase	**One (1) year from the date of original retail purchase**	**Seven (7) years from the date of original retail purchase**
Parts and Labor (internal/functional parts only)	Parts and Labor	Parts only (Consumer will be charged for labor)

▶ Replacement products and parts are warranted for the remaining portion of the original warranty period or ninety (90) days, whichever is greater.

▶ Replacement products and parts may be new or remanufactured.

▶ LG Authorized Service Center warranties their repair work for thirty (30) days.

LG CANADA'S SOLE LIABILITY IS LIMITED TO THE WARRANTY SET OUT ABOVE. EXCEPT AS EXPRESSLY PROVIDED ABOVE, LG CANADA MAKES NO AND HEREBY DISCLAIMS ALL OTHER WARRANTIES AND CONDITIONS RESPECTING THE PRODUCT, WHETHER EXPRESS OR IMPLIED, INCLUDING, BUT NOT LIMITED TO, ANY IMPLIED WARRANTY OR CONDITION OF MERCHANTABILITY OR FITNESS FOR A PARTICULAR PURPOSE, AND NO REPRESENTATIONS SHALL BE BINDING ON LG CANADA. LG CANADA DOES NOT AUTHORIZE ANY PERSON TO CREATE OR ASSUME FOR IT ANY OTHER WARRANTY OBLIGATION OR LIABILITY IN CONNECTION WITH THE PRODUCT. TO THE EXTENT THAT ANY WARRANTY OR CONDITION IS IMPLIED BY LAW, IT IS LIMITED TO THE EXPRESS WARRANTY PERIOD ABOVE. LG CANADA, THE MANUFACTURER OR DISTRIBUTOR SHALL NOT BE LIABLE FOR ANY INCIDENTAL, CONSEQUENTIAL, SPECIAL, DIRECT OR INDIRECT DAMAGES, LOSS OF GOODWILL, LOST PROFITS, PUNITIVE OR EXEMPLARY DAMAGES OR ANY OTHER DAMAGE, WHETHER ARISING DIRECTLY OR INDIRECTLY FROM ANY CONTRACTUAL BREACH, FUNDAMENTAL OR OTHERWISE, OR FROM ANY ACTS OR OMISSIONS, TORT, OR OTHERWISE. This warranty gives you specific legal rights. You may have other rights which may vary from province to province depending on applicable provincial laws. Any term of this warranty that negates or varies any implied condition or warranty under provincial law is severable where it conflicts with provincial law without affecting the remainder of this warranty's terms.

THIS LIMITED WARRANTY DOES NOT COVER:

1. Service trips to deliver, pick up, or install the product; instructing a customer on operation of the product; repair or replacement of fuses or correction of wiring or plumbing, or correction of unauthorized repairs/installation.
2. Failure of the product to perform during power failures and interruptions or inadequate electrical service.
3. Damage caused by leaky or broken water pipes, frozen water pipes, restricted drain lines, inadequate or interrupted water supply or inadequate supply of air.
4. Damage resulting from operating the Product in a corrosive atmosphere or contrary to the instructions outlined in the Product owner's manual.
5. Damage to the Product caused by accidents, pests and vermin, lightning, wind, fire, floods, or acts of God.
6. Damage resulting from the misuse, abuse, improper installation, repair, or maintenance of the Product. Improper repair includes use of parts not approved or specified by LG Canada.
7. Damage or product failure caused by unauthorized modification or alteration, or use for other than its intended purpose, or resulting from any water leakage due to improper installation.
8. Damage or Product failure caused by incorrect electrical current, voltage, or plumbing codes, commercial or industrial use, or use of accessories, components, or cleaning products that are not approved by LG Canada.
9. Damage caused by transportation and handling, including scratches, dents, chips, and/or other damage to the finish of your product, unless such damage results from defects in materials or workmanship and is reported within one (1) week of delivery.
10. Damage or missing items to any display, open box, discounted, or refurbished Product.
11. Products with original serial numbers that have been removed, altered, or cannot be readily determined. Model and Serial numbers, along with original retail sales receipt, are required for warranty validation.
12. Increases in utility costs and additional utility expenses.
13. Replacement of light bulbs, filters, or any consumable parts.
14. Repairs when your Product is used in other than normal and usual household use (including, without limitation, commercial use, in offices or recreational facilities) or contrary to the instructions outlined in the Product owner's manual.
15. Costs associated with removal of the Product from your home for repairs.
16. The removal and reinstallation of the Product if it is installed in an inaccessible location or is not installed in accordance with published installation instructions, including the Product owner's and installation manuals.
17. Shelves, door bins, drawers, handles, and accessories to the Product. Also excluded are parts besides those that were originally included with the Product.

All costs associated with the above excluded circumstances shall be borne by the consumer.

For complete warranty details and customer assistance, please call or visit our website: Call 1-888-542-2623 (24 hours a day, 365 days a year) and select the appropriate option from the menu, or visit our website at **http://www.lg.ca**

Write your warranty information below: _____

Product Registration Information: _____

Model: _____ **Serial Number:** _____

Date of Purchase: _____

NOTES

NOTES

P/No. MFL37933535