ENGLISH

LG
Life's Good

LAC5900RIN / LAC6900RIN

Radio Data System

Plays Windows Media™

Made for iPod

"Made for iPod" means that an electronic accessory has been designed to connect specifically to iPod and has been certified by the developer to meet Apple performance standards.
Apple is not responsible for the operation of this device or its compliance with safety and regulatory standards.
iPod is a trademark of Apple Inc., registered in the U.S. and other countries.

P/NO : MFL 60361546

Table of Contents

3 Safety Note
4 [LAC5900RIN] Front Panel / Remote Control
5 [LAC6900RIN] Front Panel / Remote Control
6 [LAC5900RIN] About Detachable Control Panel
7 [LAC6900RIN] About Detachable Control Panel
8 Installation
- Basic installation
- Removing the existing receiver unit
- ISO-DIN installation
- Battery installation

9 Connection
10 Basic operation
- Mute
- Using the EQ
- Adjusting the sound level
- XDSS+(Extreme Dynamic Sound System)
- Checking the clock
- Setting the clock

11 Listening to a CD
- Pause or restart a CD
- Search for a section within a track / file
- Skip to another track / file
- Intro scan
- Repeat
- Shuffle
- MP3/WMA Track -10 / +10
- MP3/WMA Folder UP/DOWN
- Checking information about your music

12 Listening to the radio
- Auto search memory
- Storing and recalling broadcast frequencies
- To scan the preset stations
- To tune in the preset stations

Listening RDS broadcasting
Connecting USB device
13 Listening to music by connecting iPod
- Pause or restart playback
- Shuffle
- Repeat
- Checking music menus
- Checking information about your music
- Changing iPod settings

14 Connecting an Auxiliary Equipment
Changing settings
15 Troubleshooting
16 Specifications
Compatible iPod models

CE

This product is manufactured to comply with Directive 2006/28/EEC(ANNEX I , 3.2.9), 72/245/EEC, and 2006/95/EC.

European representative :

LG Electronics Service Europe B.V. Veluwezoom 15, 1327 AE Almere, The Netherlands
(Tel : +31-036-547-8940)

The unit is compatible with the steering wheel remote control. The function allows operation by sending the steering wheel remote control signal to the unit.
For details, consult with your dealer.

Safety Note

CAUTION

RISK OF ELECTRIC SHOCK DO NOT OPEN

CAUTION : TO REDUCE THE RISK OF ELECTRIC SHOCK DO NOT SPLIT COVER(OR BACK) NO USER SERVICEABLE PARTS INSIDE. REFER SERVICING TO QUALIFIED SERVICE PERSONNEL.

This lightning flash with arrowhead symbol within an equilateral triangle is intended to alert the user to the presence of uninsulated dangerous voltage within the product's enclosure that may be of sufficient magnitude to constitute a risk of electric shock to persons.

The exclamation point within an equilateral triangle is intended to alert the user to the presence of important operating and maintenance (servicing) instructions in the literature accompanying the product.

Always operate the vehicle in a safe manner.
Do not become distracted by the vehicle while driving, and always be fully aware of all driving condition. Do not change settings, or any functions. Pull over in a safe and legal manner before attempting such operations.

Do not use for many hours at extremely low or high temperature. (-10~60°C)

To reduce the risk of electric shock, do not remove the cover or back of this product. There are no user-serviceable parts inside.
Refer servicing to qualified service personnel.

To reduce the risk of fire or electric shock, do not expose this product to dripping or splashing water, rain, or moisture.

The temperature of unit's outside can be extremely high, please use the unit after proper installation in your vehicle.

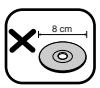

This unit cannot play 8cm disc (use 12cm disc only).

CAUTION : This product uses a Laser System.
To ensure proper use of this product, please read this owner's manual carefully and retain it for future reference.
Should the unit require maintenance, contact an authorized service center. Performing controls, adjustments, or carrying out procedures other than those specified herein may result in hazardous radiation exposure.
To prevent direct exposure to laser beam, do not try to open the enclosure. Visible laser radiation when open. DO NOT STARE INTO BEAM.

CLASS 1 LASER PRODUCT
KLASSE 1 LASER PRODUKT
LUOKAN 1 LASER LAITE
KLASS 1 LASER APPARAT
CLASSE 1 PRODUIT LASER

This device is equipped with a portable battery or accumulator.
Safe way to remove the battery or the battery from the equipment:
Remove the old battery or battery pack, follow the steps in reverse order than the assembly. To prevent contamination of the environment and bring on possible threat to human and animal health, the old battery or the battery put it in the appropriate container at designated collection points. Do not dispose of batteries or battery together with other waste. It is recommended that you use local, free reimbursement systems batteries and accumulators.

The battery shall not be exposed to excessive heat such as sunshine, fire or the like.

Disposal of your old appliance

1. When this crossed-out wheeled bin symbol is attached to a product it means the product is covered by the European Directive 2002/96/EC.
2. All electrical and electronic products should be disposed of separately from the municipal waste stream via designated collection facilities appointed by the government or the local authorities.
3. The correct disposal of your old appliance will help prevent potential negative consequences for the environment and human health.
4. For more detailed information about disposal of your old appliance, please contact your city office, waste disposal service or the shop where you purchased the product.

Caution
When being connected in a wrong way, the unit displays as follows.
- Antenna port short : "**ANTENNA ON PORT SHORT CIRCUIT CHECK**"

After connecting it again, restart the unit.

You have to set the disc format option to [Mastered] in order to make the discs compatible with the LG players when formatting rewritable discs.
When setting the option to Live File System, you cannot use it on LG players.
(Mastered/Live File System : Disc format system for Windows Vista)

[LAC5900RIN] Front Panel / Remote Control

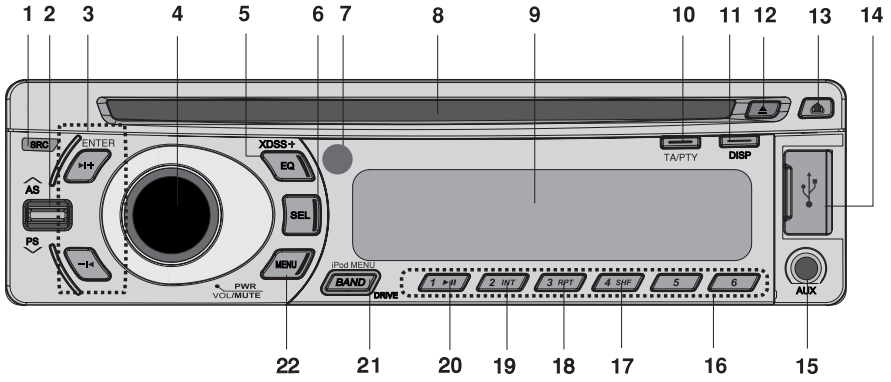

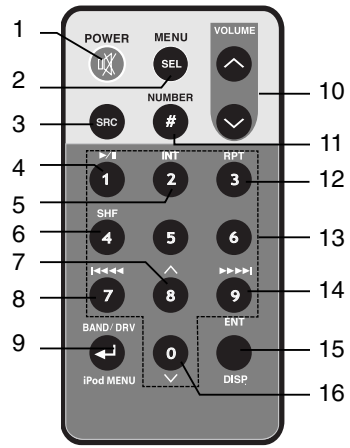

1 SOURCE [**SRC**]
2 • Auto Store [**∧/AS**]
• Preset Scan [**V/PS**]
• MP3/WMA Track +10/-10 **∧/V**
• Folder Up/Down **∧/V**
3 [ENTER]
Skip / Search / Seek / Tune -**I◄** / **►I+**
4 • Volume
• [**MUTE**]
• Power [**PWR**]
5 Equalizer [**EQ**]
Extreme Dynamic Sound System [**XDSS+**]
6 Select [**SEL**]
7 Remote Sensor(Optional)
8 CD slot
9 Display window
10 • Traffic Announcement[TA]
• Programme Type[PTY]
11 Display [**DISP**]
12 Eject⏏
13 Release
14 USB slot
15 AUX in
16 Preset Station [**1~6**]
17 Shuffle [**SHF**]
18 Repeat [**RPT**]
19 Intro Scan [**INT**]
20 Play/Pause **►II**
21 • [**BAND**]
• [**DRIVE**]
• iPod MENU
22 • [**MENU**]

1 Power [**POWER**] / Mute
2 Select [**MENU/SEL**]
3 Source [**SRC**]
4 Play / Pause **►/II**
5 Intro Scan [**INT**]
6 Shuffle [**SHF**]
7 • MP3/WMA Track +10
• Folder Up **∧**
• Auto Store
8 • CD Skip / Search
• Seek / Tune **I◄◄** **◄◄**
9 • [**BAND**]
• DRIVE [**DRV**]
• iPod MENU
10 Volume Up ^ / Down v
11 Number [**#**]
12 Repeat [**RPT**]
13 Number [**0 -9**]
14 • CD Skip / Search
• Seek / Tune **►►** **►►I**
• [ENTER]
15 Display [**DISP.**]
16 • MP3/WMA Track -10
• Folder Down **V**
• Preset Scan

[LAC6900RIN] Front Panel / Remote Control

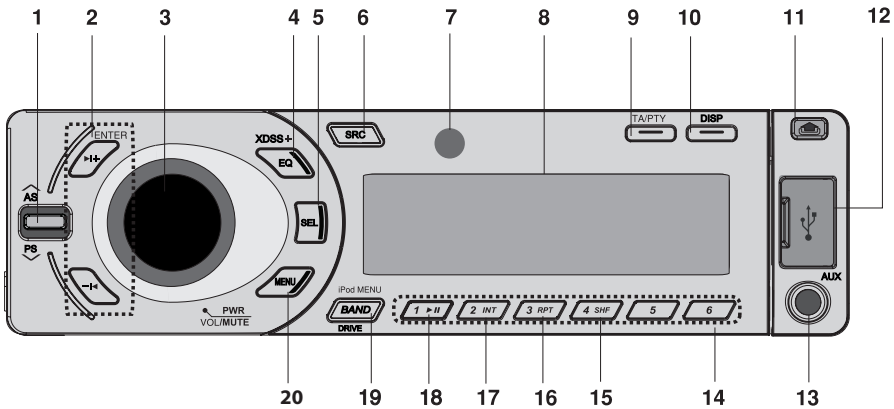

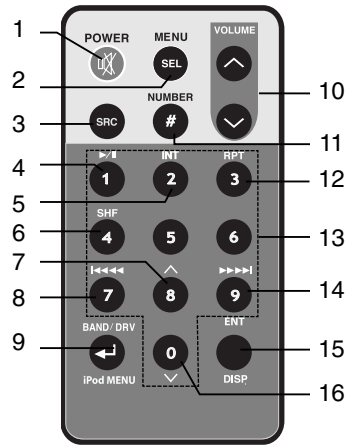

1 • Auto Store [**Λ/AS**]
• Preset Scan [**V/PS**]
• MP3/WMA Track +10/-10 **Λ/V**
• Folder Up/Down **Λ/V**

2 [ENTER]
Skip / Search / Seek / Tune **-I◄ / ►I+**

3 • Volume
• [**MUTE**]
• Power [**PWR**]

4 Equalizer [**EQ**]
Extreme Dynamic Sound System [**XDSS+**]

5 Select [**SEL**]

6 SOURCE [**SRC**]

7 Remote Sensor(Optional)

8 Display window

9 • Traffic Announcement[TA]
• Programme Type[PTY]

10 Display [**DISP**]

11 Release ⏏

12 USB slot

13 AUX in

14 Preset Station [**1~6**]

15 Shuffle [**SHF**]

16 Repeat [**RPT**]

17 Intro Scan [**INT**]

18 Play/Pause **►II**

19 • [**BAND**]
• [**DRIVE**]
• iPod MENU

20 • [**MENU**]

1 Power [**POWER**] / Mute 🔇

2 Select [**MENU/SEL**]

3 Source [**SRC**]

4 Play / Pause **►/II**

5 Intro Scan [**INT**]

6 Shuffle [**SHF**]

7 • MP3/WMA Track +10
• Folder Up **Λ**
• Auto Store

8 • CD Skip / Search
• Seek / Tune **I◄◄ ◄◄**

9 • [**BAND**]
• DRIVE [**DRV**]
• iPod MENU

10 Volume Up ^ / Down v

11 Number [**#**]

12 Repeat [**RPT**]

13 Number [**0 -9**]

14 • CD Skip / Search
• Seek / Tune **►► ►►I**
• [ENTER]

15 Display [**DISP.**]

16 • MP3/WMA Track -10
• Folder Down **V**
• Preset Scan

[LAC5900RIN] About Detachable Control Panel

Attaching the control panel

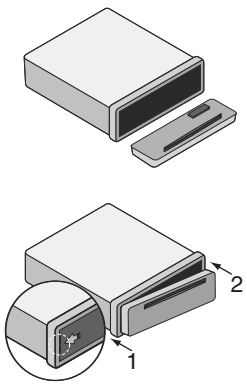

1 Align the left side of the panel with the stopper.
2 Push the right side or panel into the unit until it clicks.

Caution

- The control buttons may not work properly if the control panel is not attached properly. If this occurs, gently press the display.
- Do not leave the control panel in any area exposed to high temperatures or direct sunlight.
- Do not drop the control panel or otherwise subject it to strong impact.
- Do not allow such volatile agents as benzine, thinner, or insecticides to come into contact with the surface of the control panel.

Detaching the control panel

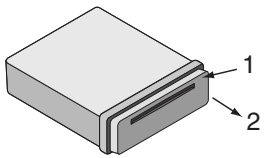

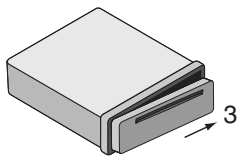

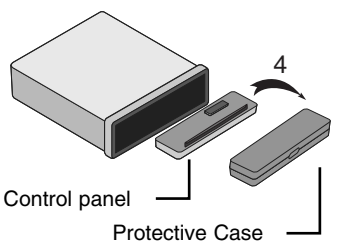

1 Press the "⏏" (RELEASE) to open the control panel.
2 Hold the right part of the control panel.
3 Pull out the control panel.
4 Place the control panel in the supplied protective case.

Note

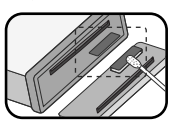

Periodically wipe the contacts on the back of the control panel with a cotton swap moistened with alcohol. For safety, turn off the ignition before cleaning, and remove the key from the ignition switch.

[LAC6900RIN] About Detachable Control Panel

Attaching the control panel

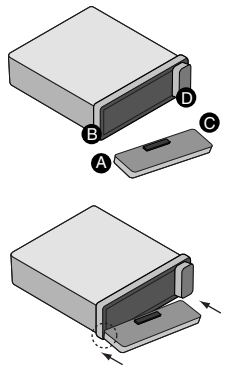

1 Attach part Ⓐ of the control panel to part Ⓑ of the unit.
2 Attach part Ⓒ of the control panel to part Ⓓ of the unit while pushing the control panel to left.
3 Close the control panel.

Caution

- When detaching or attaching the control panel, do not press the display or control buttons.
- The control buttons may not work properly if the control panel is not attached properly. If this occurs, gently press the control panel.
- Do not leave the control panel in any area exposed to high temperatures or direct sunlight.
- Do not drop the control panel or otherwise subject it to strong impact.
- Do not allow such volatile agents as benzine, thinner, or insecticides to come into contact with the surface of the control panel.
- Do not try to disassemble the control panel.

Detaching the control panel

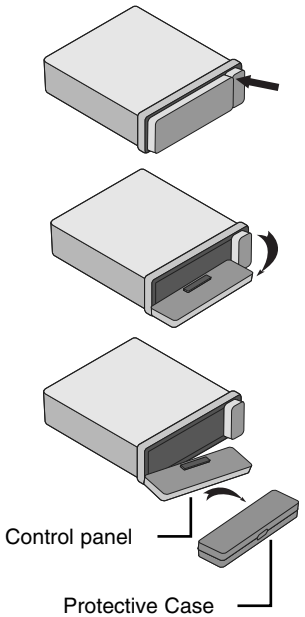

1 Press the " ⏏ " button to unlock the control panel.
2 Push the control panel to left.
3 Pull the control panel out of the unit.
4 Put the detached control panel into the protective case.

Note

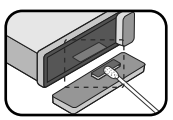

Periodically wipe the contacts on the back of the control panel with a cotton swap moistened with alcohol. For safety, turn off the ignition before cleaning, and remove the key from the ignition switch.

Installation

Basic Installation

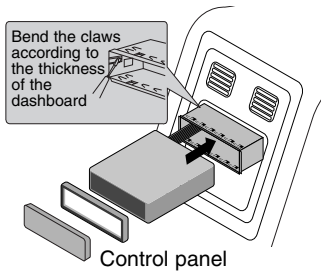

Before installing, make sure that the ignition-switch is set to OFF and remove the terminal of the car battery to avoid short-circuiting.

1 Remove the existing receiver unit.
2 Make the necessary connections.
3 Install the installation sleeve.
4 Install the unit into the installation sleeve.

Removing the existing receiver unit

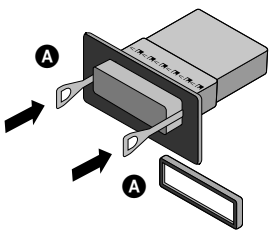

If there is already an installation sleeve for the receiver unit in the dashboard, it must be removed.

1 Remove the rear support from the unit.
2 Remove the control panel and trim ring from the unit.
3 Insert the lever Ⓐ into the hole on one side of the unit.
Perform the same operation on the other side and pull the unit out from the mounting sleeve.

ISO-DIN Installation

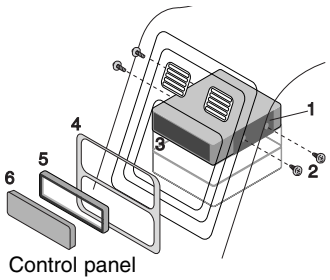

1 Slide the unit into the ISO-DIN frame.
2 Fit screws removed from the old unit.
3 Slide the unit and frame into the dash opening.
4 Install the dash panel or adapter plate.
5 Install the trim ring to the unit.
6 Install the control panel to the unit.

Battery Installation

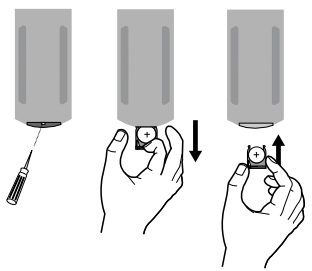

1 Pull out the battery holder with a sharp product like a ball point pen.
2 Put the battery with ⊕ and ⊖ correctly on the battery holder.
3 Push the battery holder back into its original position.

Note

- Use only one CR2025 (3V) lithium battery.
- Remove the battery if the remote control is not used for a long period of time.
- Do not leave the product in a hot or humid place.
- Do not handle the battery with metallic tools.
- Do not store the battery with metallic materials.

Connection

Before connecting, make sure that the ignition switch is set to OFF, and remove the battery ⊖ terminal to avoid short circuits.

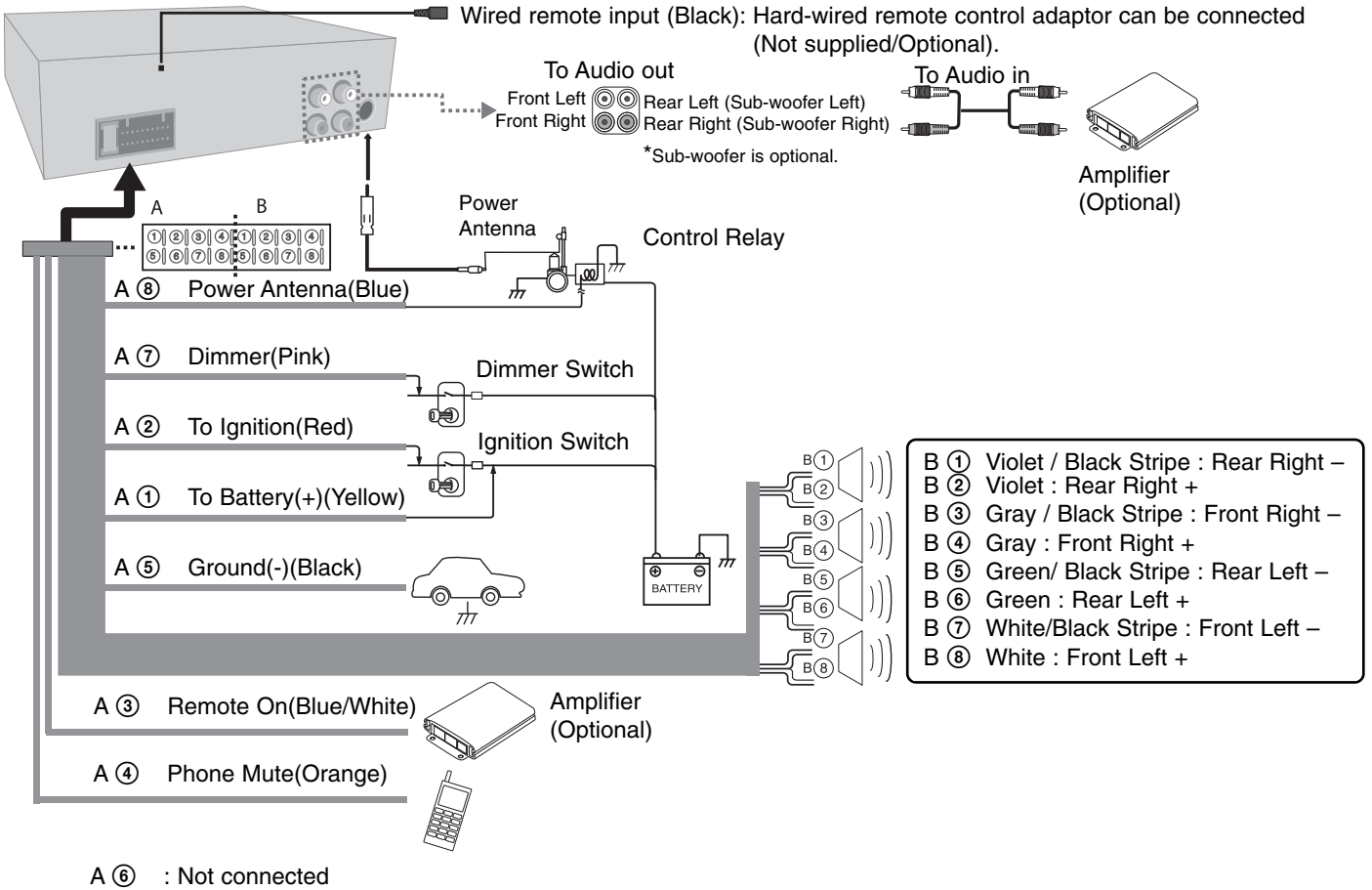

Basic Operation

	ON PLAYER	ON REMOTE
1. Turn the unit on.	**PWR**	**POWER**
2. Select a source.	**SRC**	**SRC**
3. Adjust the volume.	**Rotate PWR**	**VOLUME ∧ ∨**

Basic operation - more you can do

Mute

Press **VOL/MUTE** (**POWER** on the remote control) to cut the sound. To cancel it, press again.

Using the EQ

EQ is to increase or decrease the signal strength of audio frequencies. The function helps you to enjoy sound more plentifully. Press **EQ/XDSS+** repeatedly. The indicator lights up in the following order.

POP → CLASSIC → ROCK → JAZZ → VOCAL → SALSA → SAMBA → REGGAE → RUSSY → USER1 → USER2 → Off(not displayed)

Note

- When XDSS+ is set to “Off”, you can adjust the EQ settings.
- You can adjust sound level to your preference. Once you select a USER mode and then adjust the sound level, it will be automatically stored for the currently selected USER mode. Refer to the “Adjusting the sound level” for USER 1/2 mode.

Adjusting the sound level

Press **SEL** (**SEL/MENU** on the remote control) repeatedly to select the mode you want to adjust from VOL(volume), BAL(left/right speaker), FAD(front/rear speaker) and SUB(Sub-woofer:optional). To adjust sound quality, rotate **PWR** or press **VOLUME** ∧ ∨ on the remote control.

Note

When EQ and XDSS+ is set to “Off”, you can also adjust the sound level (BAS(bass), MID(middle), TRB(treble)) settings.

XDSS+ (Extreme Dynamic Sound System)

Press and hold **EQ/XDSS+. (**XDSS+ : Improves the treble, bass sound.) To cancel it, press and hold again.

Checking the clock

You can see the clock pressing **DISP** (**DISP**. on the remote control).

Setting the clock

When RDS CT information is not received and then you set CT on the setting menu to OFF, you can adjust the time by yourself.

Refer to the page 14 for setting the CT(Clock Time) ON/OFF.

1 Press the **DISP**(**DISP**. on the remote control) and then, press and hold it for more 1 second.
2 Press the **▶I+(▶▶▶▶I** on the remote control) to adjust the hour.
3 Press the **-I◀ (I◀◀◀◀** on the remote control) to adjust the minute.
4 Press **DISP**(**DISP**. on the remote control) again to finish the setting.

Listening to a CD

	ON PLAYER	ON REMOTE
1. Open the front panel. [Only in LAC6900RIN]	⏏	-
2. Insert a CD.	-	-
3. Adjust the volume.	**Rotate PWR**	**VOLUME ∧ ∨**

Listening to a CD - more you can do

Pause or restart a CD

Press **▶II** on the player (**▶/II** on the remote control) during playback. Press this button again to resume play.

Search for a section within a track / file

Press and hold **-I◀ / ▶I+** on the player (**I◀◀◀◀/▶▶▶▶I** on remote control) for about 1 second during playback and then release at the point you want.

Skip to another track / file

Press **-I◀ / ▶I+** on the player (**I◀◀◀◀/▶▶▶▶I** on remote control.). To skip to previous track, press briefly **-I◀** within 3 seconds of playing time. Press [**#**] and a number you want to move on remote control to move the files/track.

Intro scan

Press or press and hold **INT** on the player (**INT** on remote control). Each files in the current selected folder (🖿 **INT**) or the first 10 seconds of each tracks/files (**INT**) on the disc are played. To cancel it, press the button again.

Repeat

Press or press and hold **RPT** on the player (**RPT** on the remote control). The current selected tracks/files (**1 RPT**) or folder (🖿 **RPT**) on the disc is played repeatedly. To cancel it, press the button again.

Shuffle

Press or press and hold **SHF** on the player (**SHF** on the remote control). Each files in the current selected folder (🖿 **SHF**) or all of the tracks/files (**SHF**) on the disc is played randomly. Press **SHF** again to cancel it.

Note

During random playback, if you press **-I◀** , you won't go back to the previous track.

MP3/WMA Track -10 / +10

(If there is no folder or one folder.) During playback push the button down to **∨/PS** to go back 10 tracks, or push it up to **∧/AS** to go forward 10 tracks.

MP3/WMA Folder UP/DOWN

(If there are more than two folders.) During playback, push the button down to **∨/PS** to go back to the previous folder, or push it up **∧/AS** to go forward to the next folder.

Checking information about your music

MP3/WMA files often come with tags. The tag gives the Title, Artist or Album. Press **DISP** repeatedly during MP3/WMA/CD TEXT file playback. If there is no information, "NO TEXT" will be shown in the display window.

Note

- 🖿 : The icon is displayed during MP3/WMA playback.
- **MP3/WMA Disc compatibility with this unit is limited as follows:**
  1. Sampling Frequency / 8 - 48kHz (MP3) 22.05 - 48kHz (WMA)
  2. Bit rate / within 8 - 320kbps (include VBR) (MP3) 32 -320kbps (WMA)
  3. CD-R/CD-RW file system should be "ISO 9660"
  4. If you record MP3/WMA files using software which cannot create a FILE SYSTEM, for example "Direct-CD" etc., it will not be possible to playback MP3/WMA files. We recommend that you use "Easy-CD Creator" which creates an ISO9660 file system.

Customers should also note that permission is required in order to download MP3/WMA files and music from the Internet. Our company has no right to grant such permission. Permission should always be sought from the copyright owner.

Listening to the radio

	ON PLAYER	ON REMOTE
1. Select a source to tuner.	**SRC**	**SRC**
2. Select a band.	**BAND**	**↩ / BAND**
3. Auto seek.	**-I◄ / ►I+**	**I◄◄◄◄/►►►►I**
Manual seek.	**Press and hold -I◄ / ►I+**	**Press and hold I◄◄◄◄/►►►►I**

Listening to the radio - more you can do

Auto search memory

Push the button up to **∧/AS**. The six strongest broadcast frequencies will be stored under preset button 1-6 in the order of their signal strength.To cancel, push the button up to **∧/AS**.

Storing and recalling broadcast frequencies

1 Press **BAND** to select desired band you want to store.
2 Select the desired frequency and press one of preset buttons 1-6 and hold until the beep sound.
3 Repeat steps 1-2 to preset other stations.The next time, you press the same preset button, the radio station frequency is recalled from the memory.

To scan the preset stations

Push the button down to **∨/PS**. Each preset station appears. To cancel, push the button down to **∨/PS**.

To tune in the preset stations

Press **BAND** to select the desired band and press the desired preset button 1-6 (preset button 1-6 on the remote control).

Note

- When a station is stored on the preset numbers on which another station of the same band has already been preset, the previously preset station is automatically erased.

Listening RDS broadcasting

	ON PLAYER	ON REMOTE
1. Select a source to tuner.	**SRC**	**SRC**
2. Select a band to FM.	**BAND**	**BAND**
3. Select a programme types.	**Press and hold TA/PTY**	**-**
4. Select a station in PTY type.	**1- 6**	**1-6**

RDS broadcasting information.

Press and hold the **TA/PTY** repeatedly for selecting each mode.
Music group ⟶ Speech Group ⟶ Search off

NO.	MUSIC GROUP	NO.	SPEECH GROUP
1.	POP M, ROCK M	1.	NEWS, AFFAIRS, INFO
2.	EASY M, LIGHT M.	2.	SPORT, EDUCATE, DRAMA
3.	CLASSICS, OTHER M	3.	CULTURE, SCIENCE, VARIED
4.	JAZZ, COUNTRY	4.	WEATHER, FINANCE, CHILDREN
5.	NATION M, OLDIES	5.	SOCIAL, RELIGION, PHONE IN
6.	FOLK M	6.	TRAVEL, LEISURE, DOCUMENT

Connecting USB device

	ON PLAYER	ON REMOTE
1. Open the USB cover.	**-**	**-**
2. Connect the USB device.	**-**	**-**
3. Adjust the volume.	**Rotate PWR**	**VOLUME ∧ ∨**

Moving to another drive

When connecting this unit to multi reader, press **BAND** (**BAND/DRV** on remote control) to go to the next drive. Each time you press the button, the driver modes changes.

Note

- If the USB device is already connected, press **SRC** (**SRC** on remote control.) to select a source to USB.
- Pause / Intro Scan / Repeat / Shuffle / ... functions are same with “Listening to a CD - more you can do”. Refer to the page 11.

Listening to music by connecting iPod

You can enjoy iPod-stored music on the unit by connecting it to the USB connector using the appropriate cable.

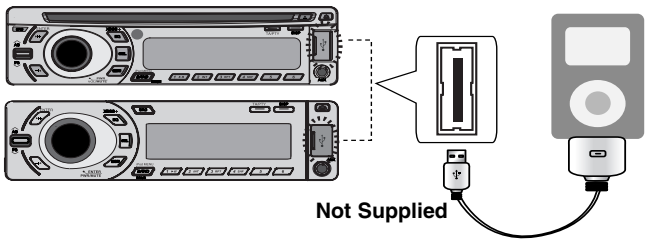

	ON PLAYER	ON REMOTE
1. Open the USB cover.	-	-
2. Connect the iPod.	-	-
3. Adjust the volume.	**Rotate PWR**	**VOLUME ∧ ∨**

Note

- If the iPod is already connected, press **SRC** (**SRC** on remote control.) to select a source to USB.
- Refer to the page 16 to check the compatible iPod model for this unit.
- Repeat, Shuffle, Checking music information functions are only in track number display mode.

Listening to music by connecting iPod - more you can do

Pause or restart playback

Press **▶II** on the player (**▶/II** on the remote control) during playback. Press this button again to resume play.

Shuffle

Press or press and hold **SHF** on the player (**SHF** on the remote control). Each files in the current selected folder (**SHF**) or all of the tracks/files (**SHF**) on the iPod are played randomly. Press **SHF** again to cancel it.

Repeat

Press **RPT** on the player (**RPT** on the remote control). The current selected tracks/files (**1 RPT**) on the iPod is played repeatedly.
To cancel it, press the button again.

Note

During playback, if you press **-I◀/▶I+** , you won't go back to the previous or next track.

Checking music menus

1 Press **iPod MENU/BAND** (**BAND/DRV/iPod MENU** on remote control) once to move to the music menu display mode.
2 Push the button up to **∧/AS** or down to **∨/PS(∧/∨** on remote control) to select a music menu list. Then, the menu display modes change as follows.
(PLAYLISTS → ARTISTS → ALBUMS → GENRES → SONGS → COMPOSER → AUDIO BOOK → PODCAST)
3 Press **▶I+(▶▶▶▶I** on remote control) to confirm the music menu.
4 Push the button up to **∧/AS** or down to **∨/PS(∧/∨** on remote control) to select a file and press **▶I+(▶▶▶▶I** on remote control) to confirm it.
- Press **-I◀(I◀◀◀◀** on remote control) to return to the previous menu.

Checking information about your music

MP3/WMA files often come with tags. The tag gives the Title, Artist or Album. Press **DISP** repeatedly during MP3/WMA file playback. If there is no information, "NO TEXT" will be shown in the display window.

Changing iPod settings

1 Press **iPod MENU/BAND** (**BAND/DRV/iPod MENU** on remote control) twice and then **▶I+(▶▶▶▶I** on remote control) to change iPod settings.
2 Push the button up to **∧/AS** or down to **∨/PS(∧/∨** on remote control) to select a setting item. Then the setting items change as follows.
(REPEAT <-> SHUFFLE <-> BOOK SPEED)
3 Press **▶I+(▶▶▶▶I** on remote control) to confirm the item.
4 Push the button up to **∧/AS** or down to **∨/PS(∧/∨** on remote control) to adjust values and press **▶I+(▶▶▶▶I** on remote control) to confirm it.
- Press **-I◀(I◀◀◀◀** on remote control) to return to the previous menu.
- The setting values are as follows.
• REPEAT (RPT ALL <-> RPT 1 <-> RPT OFF)
• SHUFFLE (SHF OFF <-> SHF ALBUM <-> SHF ALL)
• BOOK SPEED (Audio book speed: SLOWER <-> NORMAL <-> FASTER)

Connecting an Auxiliary Equipment

	ON PLAYER	ON REMOTE
1. Connect an auxiliary equipment to the AUX jack with line input cable.	**-**	**-**
2. Select a source to AUX.	**SRC**	**SRC**
3. Play the connected Auxiliary Equipment.	**-**	**-**
4. Adjust the volume.	**Rotate PWR**	**VOLUME ^ v**

Changing settings

	ON PLAYER	ON REMOTE
1. Select one item.	**Press MENU**	**Press and hold SEL/MENU**
2. Select a source.	**Rotate PWR**	**VOLUME ^ v**
3. Finish the setting .	**Press MENU**	**Press SEL/MENU**

- AF(Alternative frequency) ON / OFF
  When the reception quality drops, the tuner automatically changes to another station in the network, broadcasting a better reception quality, using the PI and AF codes.
- REG (Region) ON / OFF
  REG ON : The unit switches to another station, within the same network, broadcasting the same program when the receiving signals from the current station become weak.
  REG OFF : The unit switches to another station, within the same network when the receiving signals from the current station become weak. (This mode, the program may differ from the one currently received.)
- TA(Traffic Announcement) ALARM / SEEK
  TA ALARM : When the tuned station has no TP information for 5 seconds, a double beep sound is output.
  TA SEEK : When the tuned station does not receive TP information for 5 seconds, the receiver retunes to the next station that has the TP information.
- PI (Programme Identification) SOUND / MUTE
  PI SOUND : If the sound of a station with different PI is heard intermittently, the receiver mutes the sound after 1 second.
  PI MUTE : If the sound of a station with different PI is heard intermittently, the receiver mutes the sound right now.
- C-T(Clock Time) ON/OFF
  You can use the RDS CT information to update the time. When RDS CT information is not received and then you set CT to OFF, you can adjust the time by yourself. Refer to the page 10 for setting the clock.
- AUX (Auxiliary) ON / OFF
  It is possible to use auxiliary equipment with this unit. Activate the auxiliary setting when using auxiliary equipment connected to this unit.
- AUX (Auxiliary) 00dB / +6dB
  Only when you set AUX to ON as switching sources, you can adjust the volume level of each source to prevent radical changes in volume.
  You can set to 0 dB or +6 dB. You may be surprised at a loud sound when you change the source from the external component to another source.
- DEMO OFF/ ON
  You can change the initial indication on the display to information name (function name, EQ name, etc...) while listening to a source.
- LCD WHI / RED
  You can change the LCD window color. WHI(white) <-> RED(red)
- [LAC5900RIN] LED RED / GRN / AUTO
  [LAC6900RIN] LED BLU / RED / AUTO: You can change the button color.
- COL TM (Color changing time)
  Only when you set LED to AUTO, you can set LED color changing time from 5 to 60 seconds.
- SW(Subwoofer) OFF / SW 55HZ / SW 85HZ / SW 120 HZ
  You can enable the subwoofer.
  SW OFF <-> SW 55HZ <-> SW 85HZ <-> SW 120 HZ.
- DIM(Dimmer) OFF / ON / AUTO
  You can change the brightness of the display window during the power-on status. When you set DIMMER to AUTO, the dimmer operates according to the car dimmer setting.
- DIM L (Dimmer Level)
  When you set DIM to ON/AUTO, you can adjust the dimmer level. (-2,-1,0,+1,+2)
- A-EQ(Auto EQ) ON/OFF
  AUTO EQ operates only in the music file supported with Genre in the device. When you set AUTO EQ to ON, POP, CLASSIC, ROCK, or JAZZ is automatically selected according to the music genre.
- BEEP 2ND / ALL
  BEEP 2ND : The beep is generated when a key is long pressed. (1 sec)
  BEEP ALL : The beep is generated when any key is pressed.

Troubleshooting

	Symptom	Cause	Correction
General	Power doesn't turn on / The unit doesn't operate.	Leads and connectors are not properly.	Confirm once more that all connections are correct.
		The fuse is blown.	Rectify the problem that caused the fuse to blow, and then replace it. Be very sure to install the correct fuse with the same rate.
		Noise and other factors are causing the built-in microprocessor to operate incorrectly.	Turn the unit off and then on.
	No sound is heard / The volume level will not rise.	Cables are not connected correctly.	Connect the cables correctly.
CD	There's audio skipping.	This unit is not firmly secured.	Secure this unit firmly.
	The playback is not possible.	The disc is dirty.	Clean the disc.
		The loaded disc is of a type this unit cannot play.	Check what type the disc.
Radio	Radio stations cannot be tuned in.	The signal strength of the stations is too weak(when tuning in with automatic tuning.)	Tune in the stations manually.
		No station has been preset or preset stations have been cleared(when tuning by scanning preset stations.)	Preset the stations.(Refer to the page 12)
iPod	iPod does not work.	Check whether the player is connected to the unit correctly.	Connect it to the unit correctly.
Remote control	The unit does not operate correctly even when the appropriate remote control buttons are pressed.	Battery power is low.	Load new battery.

Specifications

General	
Output Power	53W x 4CH (Max.)
Power Source	DC 12V
Speaker impedance	4Ω
Ground System	Negative
Dimensions (W x H x D)	180 x 50 x 176 mm (Without Control Panel)
Net Weight	1.3 kg
Tuner	
FM	
Frequency Range	87.5-107.9, 87.5-108 MHz
S/N Ratio	55 dB
Distortion	0.7%
Usable Sensitivity	12 dBμV
AM (MW)	
Frequency Range	520-1720 or 522-1620 kHz
S/N Ratio	50 dB
Distortion	1.0%
Usable Sensitivity	28 dBμV
CD	
Frequency Response	20 Hz-20 kHz
S/N Ratio	80 dB
Distortion	0.12%
Channel Separation (1kHz)	55 dB
AUX	
Frequency Response	20 Hz-20 kHz
S/N Ratio	80 dB
Distortion	0.1 %
Channel Separation (1kHz)	45 dB
Max Input Level (1kHz)	1.1V
USB	
Version	USB 1.1
Line OUT	
Frequency Response	20Hz ~ 20 KHz
Output Voltage	1.8 V (Max.)
Subwoofer (optional)	
Frequency Response	20Hz ~ 120 Hz
Output Voltage	1.8 V (Max.)

Designs and specifications are subject to change without notice.

Compatible iPod models

- iPod touch
- iPod classic
- iPod with video (5th generation)
- iPod nano (1st generation)
- iPod nano (2nd generation)
- iPod nano (3rd generation)