LG
Life's Good

ENGLISH
DEUTSCH
FRANÇAIS
NEDERLANDS
SLOVENŠČINA
ITALIANO
ESPAÑOL
ΕΛΛΗΝΙΚΑ
PORTUGUÊS

OWNER'S MANUAL

Mini Hi-Fi System

Please read this manual carefully before operating your set and retain it for future reference.

MODEL
RAD125 (RAD125, RAS125F)

P/NO : MFL63284618

1
Safety Information

CAUTION: TO REDUCE THE RISK OF ELECTRIC SHOCK DO NOT REMOVE COVER (OR BACK) NO USER-SERVICEABLE PARTS INSIDE REFER SERVICING TO QUALIFIED SERVICE PERSONNEL.

This lightning flash with arrowhead symbol within an equilateral triangle is intended to alert the user to the presence of uninsulated dangerous voltage within the product's enclosure that may be of sufficient magnitude to constitute a risk of electric shock to persons.

The exclamation point within an equilateral triangle is intended to alert the user to the presence of important operating and maintenance (servicing) instructions in the literature accompanying the product.

WARNING: TO PREVENT FIRE OR ELECTRIC SHOCK HAZARD, DO NOT EXPOSE THIS PRODUCT TO RAIN OR MOISTURE.

WARNING: Do not install this equipment in a confined space such as a book case or similar unit.

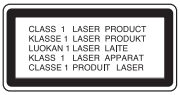

CAUTION: This product employs a Laser System. To ensure proper use of this product, please read this owner's manual carefully and retain it for future reference. Shall the unit require maintenance, contact an authorized service center.

Use of controls, adjustments or the performance of procedures other than those specified herein may result in hazardous radiation exposure.

To prevent direct exposure to laser beam, do not try to open the enclosure. Visible laser radiation when open. DO NOT STARE INTO BEAM.

CAUTION: The apparatus shall not be exposed to water (dripping or splashing) and no objects filled with liquids, such as vases, shall be placed on the apparatus.

CAUTION concerning the Power Cord

Most appliances recommend they be placed upon a dedicated circuit;

That is, a single outlet circuit which powers only that appliance and has no additional outlets or branch circuits. Check the specification page of this owner's manual to be certain. Do not overload wall outlets. Overloaded wall outlets, loose or damaged wall outlets, extension cords, frayed power cords, or damaged or cracked wire insulation are dangerous. Any of these conditions could result in electric shock or fire. Periodically examine the cord of your appliance, and if its appearance indicates damage or deterioration, unplug it, discontinue use of the appliance, and have the cord replaced with an exact replacement part by an authorized service center. Protect the power cord from physical or mechanical abuse, such as being twisted, kinked, pinched, closed in a door, or walked upon. Pay particular attention to plugs, wall outlets, and the point where the cord exits the appliance. To disconnect power from the mains, pull out the mains cord plug. When installing the product, ensure that the plug is easily accessible.

This device is equipped with a portable battery or accumulator.

Safe way to remove the battery or the battery from the equipment:

Remove the old battery pack, follow the steps in reverse order than the assembly. To prevent contamination of the environment and bring on possible threat to human and animal health, the old battery or the battery put in the appropriate container at designated collection points. Do not dispose of batteries or battery together with other waste. It is recommended that you use local, free reimbursement system batteries and accumulators. The battery shall not be exposed to excessive heat such as sunshine, fire or the like.

Disposal of your old appliance

1. When this crossed-out wheeled bin symbol is attached to a product it means the product is covered by the European Directive 2002/96/EC.
2. All electrical and electronic products should be disposed of separately from the municipal waste stream via designated collection facilities appointed by the government or the local authorities.
3. The correct disposal of your old appliance will help prevent potential negative consequences for the environment and human health.
4. For more detailed information about disposal of your old appliance, please contact your city office, waste disposal service or the shop where you purchased the product.

This product is manufactured to comply with EMC Directive 2004/108/EC Low Voltage Directive and 2006/95/EC.

European representative :

LG Electronics Service Europe B.V. Veluwezoom 15, 1327 AE Almere, The Netherlands (Tel : +31–036–547–8940)

Unique Features

USB Direct Recording

Records music to your USB device.

1 Safety Information

2 CAUTION
3 Unique Features

2 Preparation

6 Accessories
6 Playable file Requirement
7 Remote Control
8 Front panel
10 Rear panel

3 Installation

11 Connecting the speakers
11 Attaching the speakers to the unit
11 Optional Equipment Connection
11 AUX IN Connection
12 USB Connection
12 Antenna Connection

4 Operation

13 Basic Operations
13 Other Operations
13 Programmed Playback
14 Displaying file information (ID3 TAG)
14 Turn off sound temporarily
14 AUTO DJ playback
15 Radio Operations
15 Listening to the Radio
15 Presetting the Radio Stations
15 Deleting all the saved Stations
15 Improving poor FM reception
15 Seeing information about a Radio station
16 Sound adjustment
16 Setting the surround mode
16 Setting the Clock
17 Using your player as an alarm Clock
17 Sleep Timer Setting
17 Dimmer
17 Advanced Operations
17 Listening to music from your external device
18 Recording to USB

5 Maintenance

19 Handling the Unit
19 When shipping the Unit
19 Keeping the exterior surfaces clean
19 Cleaning the Unit
19 Maintaining the Unit
19 Notes on Discs
19 Handling Discs
19 Storing Discs
19 Cleaning Discs

6 Troubleshooting

20 Troubleshooting

7 Appendix

21 Specifications

2 Preparation

Accessories

Please check and identify the supplied accessories.

FM Antenna (1)

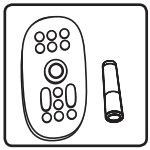

Remote Control (1)/ Battery(1)

Playable file Requirement

MP3/ WMA music file requirement

MP3/ WMA file compatibility with this unit is limited as follows :

- Sampling frequency : within 32 kHz to 48 kHz (MP3), within 32 kHz to 48 kHz (WMA)
- Bit rate : within 32 kbps to 320 kbps (MP3), 40 kbps to 320 kbps (WMA)
- maximum files : Under 999
- File extensions : ".mp3"/ ".wma"
- CD-ROM file format : ISO9660/ JOLIET
- We recommend that you use Easy-CD Creator, which creates an ISO 9660 file system.

Compatible USB Devices

- MP3 Player : Flash type MP3 player.
- USB Flash Drive : Devices that support USB2.0 or USB1.1.
- The USB function of this unit does not support all USB devices.

USB device requirement

- Devices which require additional program installation connected to a computer, are not supported.
- Do not extract the USB device while in operation.
- For a large capacity USB, it may take longer than a few minute to be searched.
- To prevent data loss, back up all data.
- If you use a USB extension cable or USB hub, the USB device is not recognized.
- Using NTFS file system is not supported. (Only FAT(16/32) file system is supported.)
- This unit is not supported when the total number of files is 1 000 or more.
- External HDD, Card readers, Locked devices, or hard type usb devices are not supported.
- USB port of the unit cannot be connected to PC. The unit can not be used as a storage device.

Remote Control

Remote control

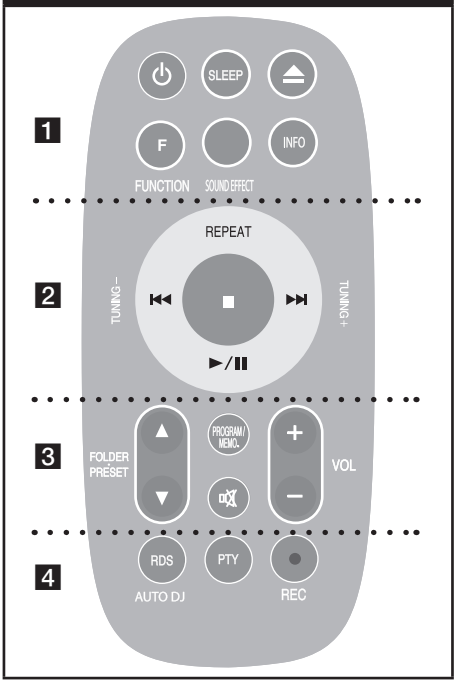

1

⏻ **(Power) :** Switches the unit ON or OFF.

SLEEP : Sets the System to turn off automatically at a specified time. (Dimmer : The display window will be darken by half.)

⏏ **(Open/Close) :** Opens and closes the disc tray.

F (FUNCTION) : Selects the function and input source.

SOUND EFFECT : Chooses sound impressions.

INFO : See information about your music. MP3/ WMA files often come with tags. The tag gives the Title, Artist, Album or Time information.

2

REPEAT : Listen to your tracks repeatedly or randomly.

TUNING (-/+) : Tunes in the desired radio station.

⏮ / ⏭ (SKIP/ SRARCH)
- Searches for a section within a track
- Skips Fast backward or Forward.

► / ❚❚ : Starts or pause playback.

■ : Stops playback or recording.

3

FOLDER · PRESET (▼ / ▲) : Searches for a folder of MP3/ WMA files. When a CD/ USB containing MP3/ WMA files in several folders is being played, press **FOLDER · PRESET** selects the folder you want to play. Choose a 'preset number' for a radio station

PROGRAM/MEMO. : For storing radio stations If you have saved radio stations using **PROGRAM/MEMO.** , you can scroll through them and select one.
Listens to your tracks in any order.

🔇 **(MUTE) :** Mutes the sound.

VOL : Adjusts speaker volume.

4

RDS/ PTY : RDS (Radio Data System) Searches radio stations by radio type.

AUTO DJ : Selects the AUTO DJ mode. (For more information refer to the page 14)

● **(REC) :** USB Direct Recording.

Front panel

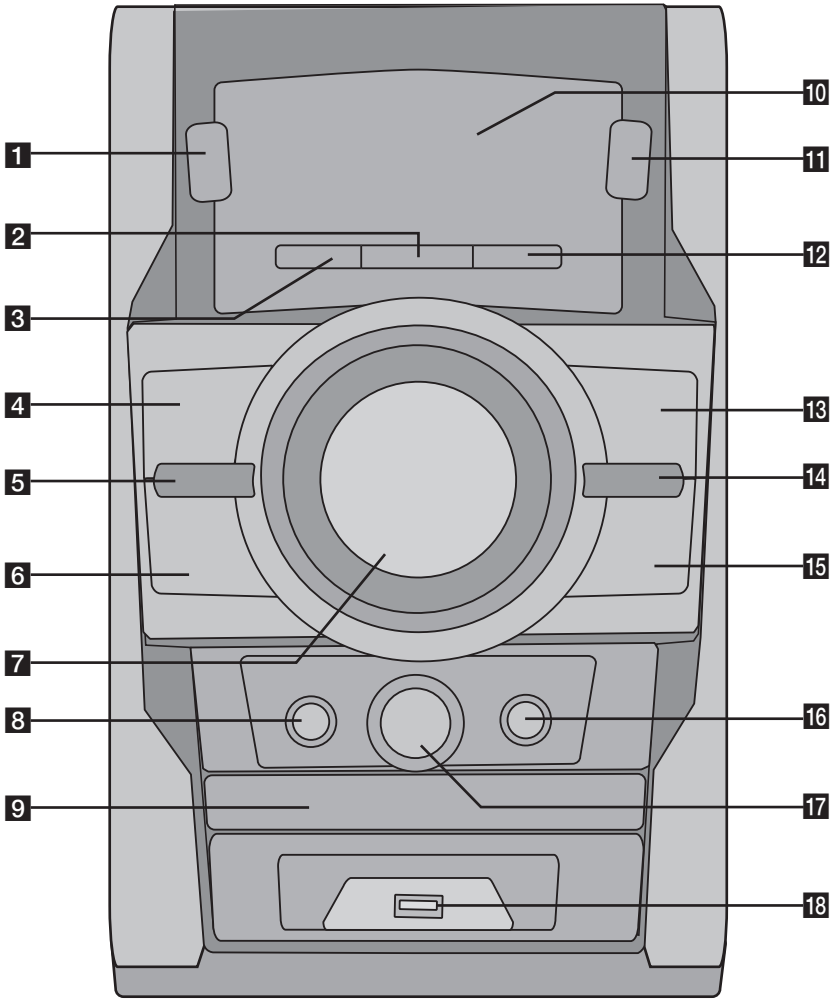

1 ⏻/ **I (Power)**

2 TIMER
With the TIMER function you can turn CD, USB play and TUNER reception on or off at a desired time.

3 SET/
Confirms the setting.
RDS
Radio Data System

4 STOP (■)

5 BASS BLAST
Reinforce the treble, bass and surround effect.
MP3 Opt.
This function is optimized for compressible MP3 file. It improves the treble sound.

6 ⏮ / **TUN. - (**Skip/Search)

7 VOLUME

8 ⓡ **(Rec)**
Recording to USB.

9 Disc Tray

10 Display window

11 FUNC.
Selects the function or input source.

12 CLOCK
For setting the clock and checking the time.

13 ▶/❚❚ , **ST./MO.**
Starts playback and pause. Selects Mono/ Stereo.

14 EQ
Chooses sound impressions.

15 TUN. + / ⏭ (Skip/Search)

16 ⏏ (**Open/Close)**

17 AUTO DJ
Selects the AUTO DJ mode. (For more information refer to the page 14)

18 USB port
You can play sound files by connecting the USB device.

Rear panel

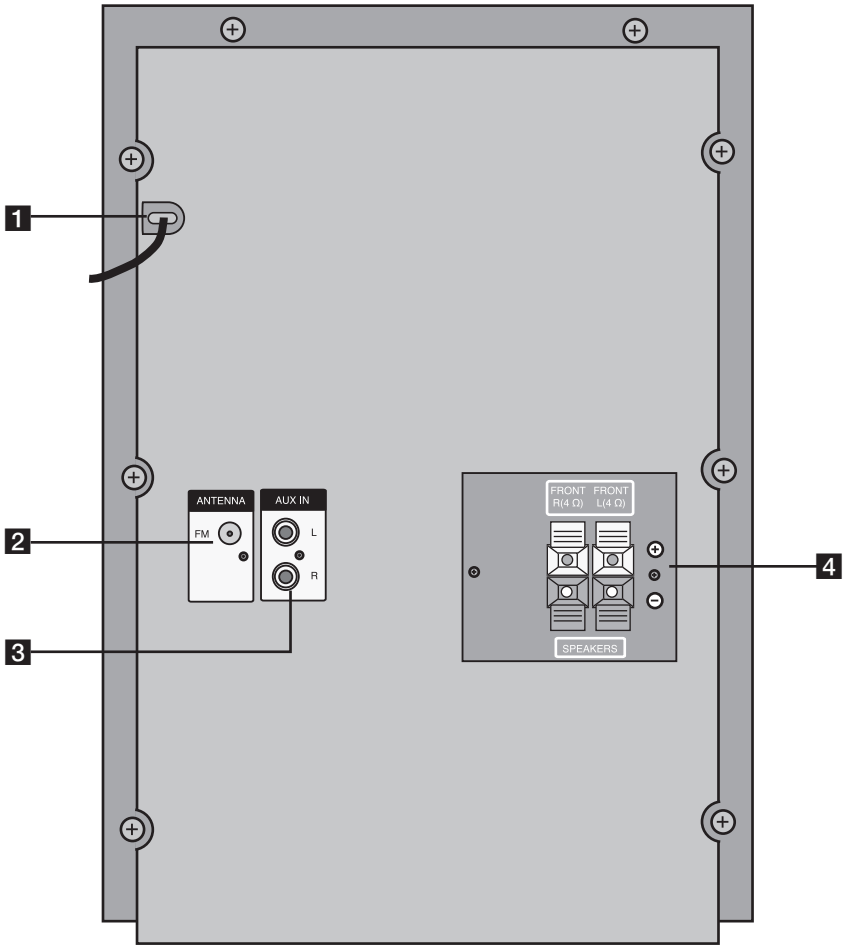

1 Power cord

2 ANTENNA (FM)

3 AUX IN connector

4 Speaker terminal

3 Installation

Connecting the speakers

Attaching the speakers to the unit

Connect the wires hooked up to the speaker to the unit.

To connect the cable to the unit, press each plastic finger pad to open the connection terminals on the unit. Insert the wire and release the finger pad.

Connect the black end of each wire to the terminals marked - (minus) and the other end to the terminals marked + (plus).

Speaker connection

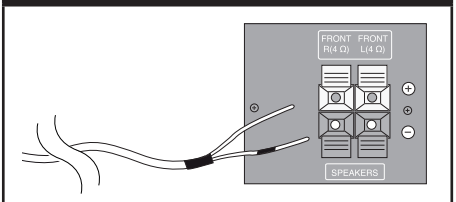

CAUTION

Be careful to make sure children do not put their hands or any objects into the *speaker duct.
*Speaker duct : A hole for plentiful bass sound on speaker cabinet (enclosure).

Optional Equipment Connection

AUX IN Connection

Connect a Output of auxiliary device to the AUX Input (L/R) Connector.
If your TV has only one output for audio (mono), connect it to the left (white) audio jack on the unit.

AUX IN Connection

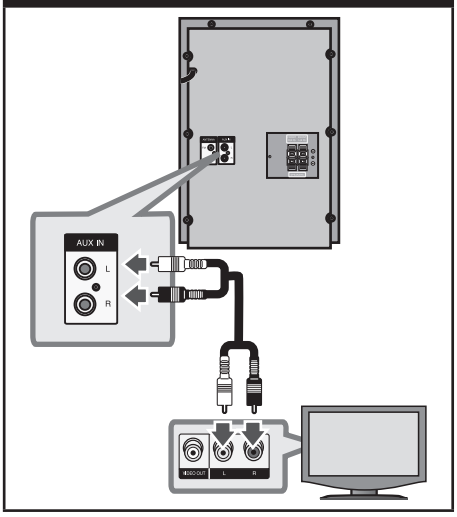

USB Connection

Connect the USB port of USB Memory (or MP3 player, etc.) to the USB port on the front of the unit.

USB Connection

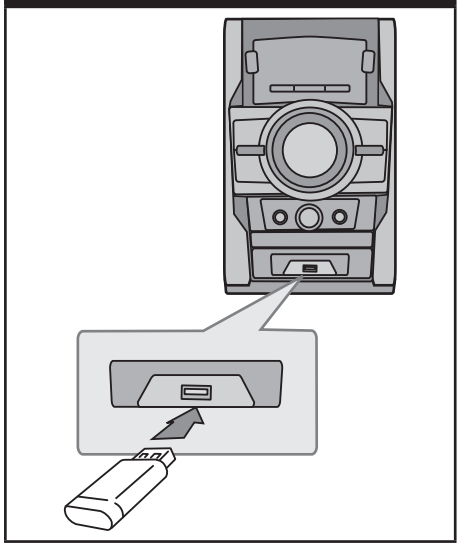

Removing the USB Device from the unit

1.Choose a different function mode or press STOP (■) twice in a row.

2. Remove the USB device from the unit.

Antenna Connection

Connect the supplied FM antenna for listening to the radio.

Connect the FM Wire antenna to the FM antenna connector.

Antenna Connection

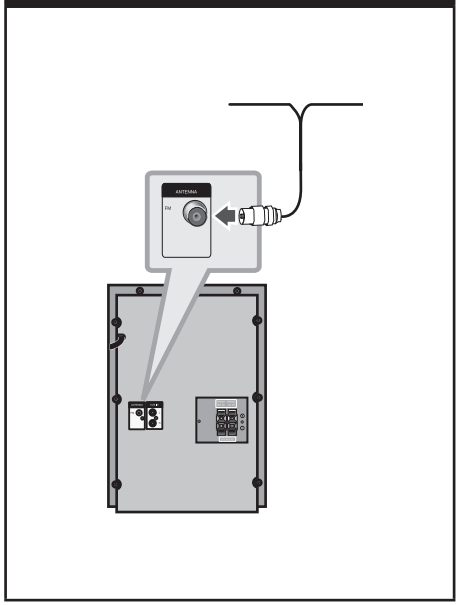

NOTE

Be sure to fully extend the FM wire antenna.
After connecting the FM wire antenna, keep it as horizontal as possible.

4 Operation

Basic Operations

1. Insert the disc by using the ⏏ (**Open/ Close)** or Connect the USB device to the USB port.
2. Select the CD or USB function by pressing **FUNCTION**.
3. Select a file (or track) you want to play by pressing ⏮ or ⏭.

To	Do this
Stop	Press ■
Playback	Press ▶/❚❚
Pause	Press ▶/❚❚
Skipping to the next/ previous track/ file	During playback, press ⏮ or ⏭ to go to the next track/file or to return to the beginning of the current track/ file. Press ⏮ twice briefly to step back to the previous track/ file.
Searching for a section within a track	Press and hold ⏮ or ⏭ during. playback and release it at the point you want to listen to.
Playing repeatedly or randomly	Press **REPEAT** on the remote control repeatedly, the display change in the following order, RPT 1 → RPT DIR (only MP3/ WMA) → RPT ALL → RANDOM → OFF.

Other Operations

Programmed Playback

The program function enables you to store your favourite files from any disc or USB device in the receiver memory.

A program can contain 20 tracks.

1. Insert a CD or USB and wait for it to be order.
2. Press **PROGRAM/MEMO.** on the remote control in stop status.
3. Press ⏮ or ⏭ on the unit or on the remote control to select a track.
4. Press **PROGRAM/MEMO.** again to save and select a next track.
5. Press ▶/❚❚ to play the programmed music files.
6. To clear your selection, press ■, **PROGRAM/MEMO.** and then ■.

NOTE

The programs are also cleared when the disc or USB device is removed, the unit is switched to power off or the function is switched to others.

Displaying file information (ID3 TAG)

While playing an MP3/ WMA file containing file information, you can display the information by pressing **INFO.**.

Turn off the sound temporarily

Press **MUTE** to mute your unit.

You can mute your unit in order, for example, to answer the telephone, the "MUTE" displayed in the display window.

AUTO DJ playback

Auto DJ blends the end of one song into the beginning of another for seamless playback. It equalizes volume across tracks for uninterrupted playback.

Press AUTO DJ on the remote control or unit repeatedly, the display changes as followings. order, RANDOM (AUTO DJ RANDOM) → RPT (AUTO DJ SEQUENTIAL) → (AUTO DJ OFF).

Mode	Display window	Description
OFF	- (AUTO DJ OFF)	-
RANDOM	RANDOM (AUTO DJ RANDOM)	The music is played randomly on this mode
REPEAT	RPT (AUTO DJ SEQUENTIAL)	The music is played repeatedly on this mode

NOTE

- Searching for a section within a track or Playing repeatedly or randomly is not supported on the AUTO DJ.
- If you switch to other functions or stop the music using STOP on the unit (or"■" ENTER on the remote control) on AUTO DJ mode, AUTO DJ function will be disable.
- AUTO DJ function is not supported in the music fi le whose leugth is less than 60 seconds.
- All musics are repeated continually until the user deactivates the AUTO DJ function.

Radio Operations

Be sure that FM aerial is connected.
(Refer to the page 12)

Listening to the Radio

1. Press **FUNCTION** until FM appears in the display window.
   The last received station is tuned in.
2. Press and hold **TUNING (-/+)** for about two seconds until the frequency indication starts to change, then release. Scanning stops when the Unit tunes in a station.

   or

   Press **TUNING (-/+)** repeatedly.
3. Adjust the volume by rotating **VOL** on the front panel or by pressing **VOL +** or **-** on the remote control repeatedly.

Presetting the Radio Stations

You can preset 50 stations for FM .

Before tuning, make sure that you have turned down the volume.

1. Press **FUNCTION** until FM appears in the display window.
2. Select the desired frequency by pressing **TUNING (-/+)**
3. Press **PROGRAM/MEMO**. a preset number will flash in the display window.
4. Press **PRESET · FOLDER (▲/▼)** to select the preset number you want.
5. Press **PROGRAM/MEMO.**
   The station is stored.
6. Repeat steps 2 to 5 to store other stations.

Deleting all the saved Stations

1. Press and hold **PROGRAM/MEMO.** for two seconds.
   "ERASE ALL" will flash up on the unit display.
2. Press **PROGRAM/MEMO.** to erase all saved radio stations.

Improving poor FM reception

Press **PLAY** (▶/❚❚) (ST./MO) on the unit or on the remote control. This will change the tuner from stereo to mono and usually improve the reception.

Seeing information about a Radio station

The FM tuner is supplied with the RDS (Radio Data System) facility. This shows information about the radio station being listened to. Press **RDS** repeatedly to cycle through the various data types. :

PS	(Programme Service Name) The name of the channel will appear in the display
PTY	(Programme Type Recognition) The programme type (e.g. Jazz or News) will appear in the display.
RT	(Radio Text) A text message contains special information from the broadcast station. This text may scroll across the display.
CT	(Time controlled by the channel) This shows the time and date as broadcast by the station.

You can search the radio stations by programme type by pressing **RDS**. The display will show the last PTY in use. Press **PTY** one or more times to select your preferred programme type. Press and hold ⏮ or ⏭. The tuner will search automatically. When a station is found the search will stop.

Sound adjustment

Setting the surround mode

This system has a number of pre-set surround sound fields. You can select a desired sound mode by using **SOUND EFFECT** on the remote control or **EQ** on the unit.
The displayed items for the Equalizer may be different depending on sound sources and effects.

On Display	Description
NATURAL	You can enjoy comfortable and natural sound
Local Specialization equalizer	Regionally optimized sound effect. (DANGDUT/ ARABIC/ PERSIAN/ INDIA/ REGUETON/ MERENGUE/ SALSA/ SAMBA/ CUMBIA/ AFRO HIPHOP)
AUTO EQ	Realizes the sound equalizer that is the most similar to the genre of which is included in the MP3 ID3 tag of song files.
POP CLASSIC JAZZ ROCK	This program lends an enthusiastic atmosphere to the sound, giving you the feeling you are at an actual rock pop, jazz or classic concert.
MP3 - - OPT	This function is optimized for compressible MP3 file. It improves the treble sound.
BASS	During playback, reinforce the treble, bass and surround sound effect.
LOUDNESS	Improves bass and treble sound.
VIRTUAL	You can enjoy more virtual surround sound.
BYPASS	You can enjoy the sound without equalizer effect.

NOTE

- In some of surround modes, some speakers maybe no sound or low sound, it depends on the mode of surround and the source of audio, it is not defective.
- You may need resetting the surround mode, after switch the input, sometimes even after the sound track changed.
- BASS BLAST, MP3 Opt. button on the unit is direct select the MP3 -- OPT or BASS sound.

Setting the Clock

1. Turn the power on.
2. Press CLOCK for at least 2 seconds
3. Choose from either, Using ⏮ or ⏭.
   - AM 12:00 (for an AM and PM display) or 0:00 (for a 24 hour display)
4. Press **SET** for confirm your selection.
5. Select the hours. Using ⏮ or ⏭.
6. Press **SET**.
7. Select the minutes, using ⏮ or ⏭.
8. Press **SET**.

Using your player as an alarm clock

1. Turn the power on.
2. Press **TIMER**. Each functions flashes.
3. Press **SET** when the function you want to be woken by is showing.
4. "ON TIME" will be displayed. This is where you set the time you want the alarm to start. Use ⏮ or ⏭ to change the hours and minutes and **SET** to save.
5. The "OFF TIME" will be displayed. This is where you set the time you want the function to stop.
6. Use ⏮ or ⏭ to change the hours and minutes and press **SET** to save.
7. You will be shown the volume (VOL) you want to be woken by. Use ⏮ or ⏭ to change the volume and **SET** to save. The clock icon "◷" shows that the alarm is set.
8. Press **TIMER** button 2 times. You can check the setting status.

NOTE

- If you set the clock time, you can check the time by pressing CLOCK even when the player is turned off.
- If you set the clock time and alarm, you can check the alarm icon "◷" by pressing CLOCK even when the unit is turned off.
- If you set the clock time and alarm, you can check the alarm icon "◷"and setting information by pressing TIMER even when the unit is turned off.

Sleep Timer Setting

Press **SLEEP** one or more times to select delay time between 10 and 180 minutes, after the unit will turn off.

To cancel the sleep function, press **SLEEP** repeatedly until "SLEEP 10" appears, and then press **SLEEP** once again while "SLEEP 10" is displayed.

NOTE

You can check the remaining time before the unit turns off.
Press **SLEEP.** The remaining time appears in the display window.

Dimmer

Press **SLEEP** once. The display window will be darken by half. To cancel it, press **SLEEP** repeatedly until dim off.

Advanced Operations

Listening to music from your external device

The unit can be used to play the music from many types of external device.
(Refer to the page 11)

1. Connect the external device to the AUX IN connector of the unit.
2 Turn the power on by pressing ⏻/I **(Power).**
3 Select the AUX function by pressing **FUNCTION.**
4 Turn the external device and start it playing.

Recording to USB

1. Connect the USB device to the unit.
2. Select a CD function by pressing **FUNCTION.**

   One track recording - You can record to USB after play you want file.

   All tracks recording - You can record to USB after stop

   Program list recording - After moving a to the programmed list and you can record it to USB

3 Start the recording by pressing Ⓡ on the unit or ● **REC** on the remote control.

4 To stop recording, press ■ **STOP**

Pausing recording

During recording, press Ⓡ to pause recording. Press ● **REC** to continue recording.
(Only Radio/ AUX)

To select recording bit rate and speed

1. Press Ⓡ on the unit or ● **REC** on the remote control for longer than 3 seconds.
2. Use ⏮ or ⏭ on the unit or remote control to select the bit rate.
3. Press Ⓡ on the unit or ● **REC** on the remote control again to select the recording speed.
4. Use ⏮ or ⏭ on the unit or remote control to select a desired recording speed.

   X1 SPEED
   - You can listen to music while recording it.

   X2 SPEED
   - You can just record the music file.

5. Press Ⓡ on the unit or ● **REC** on the remote control to finish the setting.

NOTE

- You can check the recording percentage rate for the USB record on the display window during the recording. (MP3/ WMA CD Only)
- During recording MP3/ WMA, there is no sound.
- When you stop recording during playback, the file that has been recorded at that time will be stored. (AUDIO CD Only)
- Do not remove the USB device or turn off the unit during USB recording. If not, an incomplete file may be made and not deleted on PC.
- If USB recording does not work, the message like "NO USB", "ERROR", "FULL" or "NO REC" is displayed on the display window.
- Multi card reader device or External HDD can not be used for USB recording.
- A file is recorded by about 512 Mbyte when you record for a long term.
- When you stop recording during playback, the file will not be stored.
- You may not store more than 999 files.
- On radio or portable mode, you cannot set the recording speed.
- It'll be stored as follows.

AUDIO CD	MP3/ WMA	The other source
CD_REC TRK_001 TRK_002 ⋮	FILE_REC ABC(File name) DEF(File name) ⋮	EXT_REC AUDIO_001 AUDIO_002 ⋮

The making of unauthorized copies of copy-protected material, including computer programs, files, broadcasts and sound recordings, may be an infringement of copyrights and constitute a criminal offense. This equipment should not be used for such purposes.

Be responsible
Respect copyrights

5 Maintenance

Handling the Unit

When shipping the Unit

Please save the original shipping carton and packing materials. If you need to ship the unit, for maximum protection, re-pack the unit as it was originally packed at the factory.

Keeping the exterior surfaces clean

- Do not use volatile liquids such as insecticide spray near the unit.
- Wiping with strong pressure may damage the surface. Do not leave rubber or plastic products in contact with the unit for a long period of time.

Cleaning the Unit

To clean the unit, use a soft, dry cloth. If the surfaces are extremely dirty, use a soft cloth lightly moistened with a mild detergent solution.
Do not use strong solvents such as alcohol, benzene, or thinner, as these might damage the surface of the unit.

Maintaining the Unit

The unit is a high-tech, precision device. If the optical pick-up lens and disc drive parts are dirty or worn, the picture quality could be diminished. For details, please contact your nearest authorized service center.

Notes on Discs

Handling Discs

Never stick paper or tape on the disc.

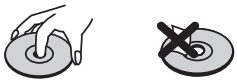

Storing Discs

After playing, store the disc in its case. Do not expose the disc to direct sunlight or sources of heat and never leave it in a parked car exposed to direct sunlight.

Cleaning Discs

Fingerprints and dust on the disc can cause poor picture quality and sound distortion. Before playing, clean the disc with a clean cloth. Wipe the disc from the center out.
Do not use strong solvents such as alcohol, benzene, thinner, commercially available cleaners, or anti-static spray intended for older vinyl records.

6 Troubleshooting

PROBLEM	CAUSE	CORRECTION
No Power.	The power cord is not plugged in.	Plug in the power cord.
	Check whether electricity failed.	Check the condition by operating other electronic devices.
No sound	Check whether you select right function.	Press FUNCTION and check the selected function.
	The audio cables are damaged.	Replace with a new audio cable.
The unit does not start playback.	An unplayable disc is inserted.	Insert a playable disc.
	No disc is inserted.	Insert a disc.
	The disc is dirty.	Clean the disc. (Refer to the 19 page)
	The disc is inserted upside down.	Place the disc with the label or printed side facing upwards.
Radio stations cannot be tuned in properly.	The antenna is positioned or connected poorly.	Connect the antenna securely.
	The signal strength of the radio station is too weak.	Tune to the station manually.
	No stations have been preset or preset stations have been cleared (when tuning by scanning preset channels).	Preset some radio stations, see page 15 for details.
The remote control does not work properly.	The remote control is too far from the unit.	Operate the remote control within about 23 ft (7m).
	There is an obstacle in the path of the remote control and the unit.	Remove the obstacle.
	The battery in the remote control is exhausted.	Replace the battery with new one.

7 Appendix

Specifications

General	
Power supply	200 - 240 V, 50/60 Hz
Power consumption	25 W
Net Weight	3.5 kg
External dimensions (W x H x D)	202 x 307 x 278 mm
Bus Power Supply (USB)	DC 5 V ⎓ 500 mA
Operating conditions Temperature	5 °C to 35 °C, Operation status: Horizontal
Operating humidity	5 % to 85 %
Laser	Semiconductor laser, wavelength 650 nm

Tuner FM	
FM Tuning Range	87.5 to 108.0 MHz or 87.50 to 108.00 MHz
FM Intermediate Frequency	128 kHz

Amplifier	
Output Power	60 W + 60 W (4 Ω at 1 kHz, THD 10 %)

CD	
Frequency Response	40 Hz to 20 000 Hz
Signal-to-noise ratio	75 dB
Dynamic range	80 dB

Specifications

Speakers

	Front Speaker
Type	2 Way 2 Speaker
Impedance	4 Ω
Rated Input Power	60 W
Max. Input Power	120 W
Net Dimensions (W x H x D)	210 x 310 x 235 mm
Net Weight	2.6 kg

Designs and specifications are subject to change without prior notice.

LG
Life's Good

Plays Windows Media™

R·D·S