LG
Life's Good

OWNER'S MANUAL

WASHING MACHINE

Please read this manual carefully before operating your washing machine and retain it for future reference.

F1480TD(1~9)
F1280TD(1~9)
F1080TD(1~9)

P/No. : MFL63288725

Contents

Contents.....2

Product features.....3

Warnings
- Important safety instructions 4
- Save these instructions.....4

Specifications.....5

Installation
- Removing packing 6
- Removing transit bolts 6
- Installation place requirements 7
- Connecting water supply hose.....9
- Installation of drain hose 11
- Leveling.....12

How to use washer
- Operating washing machine 14
- Care before washing.....15
- Washing program table.....16
- Extra options 17
- Operating data 18
- Control panel.....19
- Additional program.....20
- - Time Delay.....20
- - Crease Care 20
- - Favorite.....20
- - Pre Wash 20
- Options.....21
- - Option 21
- - Rinse 21
- - Temp. 21
- Other functions.....21
- - Rinse + Spin 21
- - Spin Only 21
- Child Lock 22
- Beep On/Off 22
- Tub Clean 23
- Door Lock & Detecting 23

Thank you for buying a LG Fully Automatic Washing Machine.

Please read your owner's manual carefully, it provides instruction on safe installation, use and maintenance. Retain it for future reference.

Recode the model and serial number of your washing machine.

Model No.
Serial No.
Date of Purchase

Adding detergent
- Adding detergent and fabric softener..24

Maintenance
- The water Inlet filter.....26
- The drain pump filter 27
- Dispenser drawer.....28
- The washing drum 29
- Cleaning your washer 29
- Cold conditions 29

Trouble shooting guide
- Diagosing problems 30
- Error messages.....32

Terms of warranty 33

Product Features



- **Protection against creases**
  With the alternating rotation of the drum, creasing is minimized.



- **Built-in heater**
  Internal heater automatically heats the water to the best temperature on selected cycles.



- **More economical with Intelligent Wash system**
  Intelligent Wash System detects the size of load and water temperature, and then determines the optimum water level and washing time to minimize energy and water consumption.



- **Child Lock**
  The Child Lock prevents children from pressing any button to change the settings during operation.



- **Low noise speed control system**
  By sensing the amount of load and balance, it evenly distributes load to minimize the spinning noise level.



- **Inverter Direct Drive system**
  The advanced Brushless DC motor directly drives the drum without belt and pulley.



- **6 motion**
  Washer is able to perform various drum actions or a combination of different actions depending on the wash program selected.
  Combined with a controlled spin speed and the ability of the drum to rotate both left and right, the wash performance of the machine is greatly improved, giving you perfect results every time.

Warnings

READ ALL INSTRUCTIONS AND EXPLANATION OF THE INSTALLATION BEFORE USE

⚠ WARNING! **For your safety, the information in this manual must be followed to minimize the risk of fire or explosion, electric shock, or to prevent property damage, personal injury, or loss of life.**

IMPORTANT SAFETY INSTRUCTIONS

WARNING : To reduce the risk of fire, electric shock, or injury to persons when using the washer, follow basic precautions, including the following:

- Before installation, check exterior damages. If it has, do not install.
- Do not install or store the washer where it will be exposed to the weather.
- Do not tamper with controls.
- Do not repair or replace any part of the washer or attempt any servicing unless specifically recommended in the user-maintenance instructions or published user-repair instructions that you understand and have the skills to carry out.
- Keep the area underneath and around your appliances free of combustible materials such as lint, paper, rags, chemicals, etc.
- The appliance is not intended for use by young children or infirm persons without supervision. Do not allow children to play on, with, or inside this or any other appliance.
- Keep small animals away from the appliance.
- Do not leave the washer door open. An open door could entice children to hang on the door or crawl inside the washer.
- Never reach into washer while it is moving. Wait until the drum has completely stopped.
- The laundry process can reduce the flame retardant of fabrics.
- To avoid such a result, carefully follow the garment manufacturer's wash and care instructions.
- Do not wash or dry articles that have been cleaned in, washed in, soaked in, or spotted with combustible or explosive substances (such as wax, oil, paint, gasoline, degreasers, dry-cleaning solvents, kerosene, etc.) which may ignite or explode. Oil may remain in the tub after a whole cycle resulting in fire during drying. So, do not load oiled clothes.
- Do not slam the washer door closed or try to force the door open when locked. This could result in damage to the washer.
- When the machine runs high temperature, the front door may be very hot. Don't touch it.
- To minimize the possibility of electric shock, unplug this appliance from the power supply or disconnect the washer at the household distribution panel by removing the fuse or switching off the circuit breaker before attempting any maintenance or cleaning.
- When unplugging power cord, do not pull out by grasping the cord. Otherwise, the power cord may be damaged.
- Never attempt to operate this appliance if it is damaged, malfunctioning, partially disassembled, or has missing or broken parts, including a damaged cord or plug.
- Before discarding an old machine unplug it. Render the plug useless. Cut off the cable directly behind the appliance to prevent misuse.
- When a product was under water, Please call service center. The risk of electric shock and fire.
- Appliance connected to the water mains using new hose-sets and old hose-sets not be reused.
- To reduce the risk of personal injury, adhere to all industry recommended safety procedures including the use of long sleeved gloves and safety glasses. Failure to follow all of the safety warnings in this manual could result in property, personal injury or death.
- Do not push down the door excessively, when washer door open. This could topple over the washer.

SAVE THESE INSTRUCTIONS

GROUNDING INSTRUCTIONS

This appliance must be grounded. In the event of malfunction or breakdown, grounding will reduce the risk of electric shock by providing a path of least resistance for electric current. This appliance is equipped with a cord having an equipment-grounding conductor and grounding plug. The plug must be plugged into an appropriate outlet that is properly installed and grounded in accordance with all local codes and ordinance.

- Do not use an adapter or otherwise defeat the grounding plug.
- If you don't have the proper outlet, consult an electrician.

WARNING : Improper connection of the equipment-grounding conductor can result in risk of electric shock. Check with a qualified electrician or serviceman if you are in doubt as to whether the appliance is properly grounded. Do not modify the plug provided with the appliance - if it does not fit the outlet, have a proper outlet installed by a qualified electrician.

Specifications

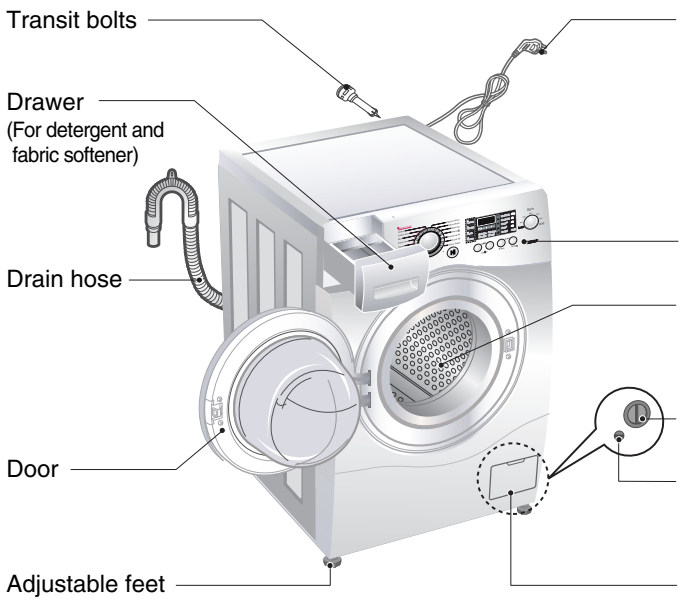

■ Name	: Front loading washing machine
■ Power supply	: 220 - 240 V~, 50 Hz
■ Size	: 600 mm(W) × 590 mm(D) × 850 mm(H)
■ Weight	: 66 kg
■ Max.Watt	: 2100 W
■ Wash capacity	: 8 kg
■ Water consumption	: 56 ℓ (7 ℓ / kg)
■ Permissible water pressure	: 100 ~ 1000 kPa (1.0 ~ 10.0 kgf / cm^2)

* The appearance and specifications may vary without notice to improve the quality of the unit.

■ Accessories

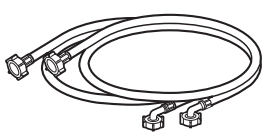

Inlet hose(1EA) ※ Option : Hot/Cold(2EA)

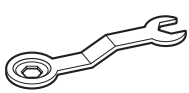

Spanner

Installation

■ Removing packing

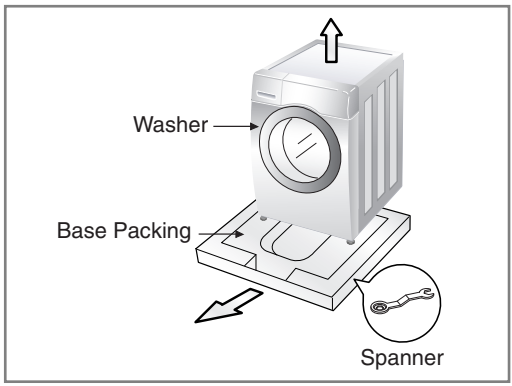

1. Remove the cardboard box and styrofoam packing.
2. Lift the washing machine and remove the base packing.
3. Remove the tape securing the power supply cord and drain hose.
4. Remove the inlet hose from the drum.

NOTE Keep the spanner in base packing for leveling.

Warning

Packaging material (e.g. Films, Styrofoam) can be dangerous for children.
There is a risk of suffocation !
Keep all packaging well away from children.

■ Removing transit bolts

To prevent internal damage during transport, the 4 special bolts are locked.
Before operating the washer, remove the bolts along with the rubber bungs.
If they are not removed, it may cause heavy vibration, noise and malfunction.

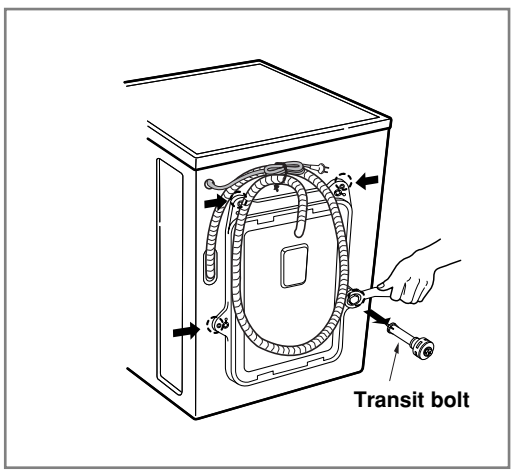

1. Unscrew the 4 bolts with the spanner supplied.
2. Take out the 4 bolts along with the rubber bungs by slightly twisting the bung.

NOTE Keep the transit bolts for future use.

3. Close the holes with the caps supplied.

Installation

■ Installation place requirement

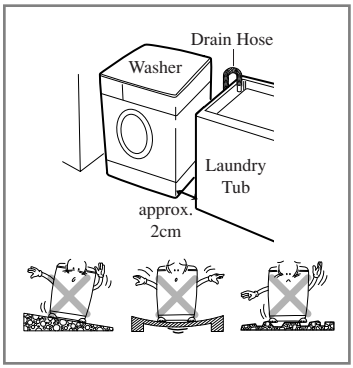

▶ Location

- **Level floor :**
  Allowable slope under entire washer is 1˚
- **Power outlet :**
  Must be within 1.5 meters of either side of location of washer.
  Do not overload the outlet with more than one appliance.
- **Additional Clearance :**
  For Wall, 10cm:rear / 2cm : right & left side
  Do not place or store laundry products on top of washer at any times.
  They can damage the finish or controls.

▶ Positioning

- Install the washer on a flat hard floor.
- Make sure that air circulation around the washer is not impeded by carpets, rugs, etc.
- Never try to correct any unevenness in the floor with pieces of wood, cardboard or similar materials under the washer.
- If it is impossible to avoid positioning the washer next to a gas cooker or coal burning stove,an insulating(85x60cm) covered with aluminum foil on the side facing the cooker or stove,must be inserted between the two appliance.
- The washer must not be installed in rooms where the temperature can drop below 0°C.
- Please ensure that when the washer is installed, it is easily accessible for the engineer in the event of a breakdown.
- With the washer installed, adjust all four feet using the transit bolt spanner provided ensuring the appliance is stable, and a clearance of approximately 20mm is left between the top of the washer and the underside of any work-top.
- This equipment is not designed for maritime use or for use in a mobile installations such as caravans, aircraft etc.

▶ Electrical connection

- Do not use an extension cord or double adapter.
- If the supply cord is damaged, it must be replaced by the manufacturer or its service agents or similarly qualified person in order to avoid a hazard.
- Always unplug the machine and turn off the water supply after use.
- Connect the machine to an earthed socket in accordance with current wiring regulations.
- The appliance must be positioned so that the plug is easily accessible.
- Repairs to the washing machine must only be carried out by qualified personnel.
  Repairs carried out by inexperienced persons may cause injury or serious malfunctioning. Contact your local service center
- Do not install your washing machine in rooms where temperature below freezing may occur. Frozen hoses may burst under pressure. The reliability of the electronic control unit may be impaired at temperatures below freezing point.
- If the appliance is delivered in the winter months and temperatures are below freezing : Place the washing machine at room temperature for a few hours before putting it into operation.

Installation

CAUTION

CAUTION concerning the Power cord

Most appliances recommend they be placed upon a dedicated circuit; that is, a single outlet circuit which powers only that appliance and has no additional outlets or branch circuits. Check the specification page of this owner's manual to be certain.

Do not overload wall outlets. Overloaded wall outlets, loose or damaged wall outlets, extension cords, frayed power cords, or damaged or cracked wire insulation are dangerous. Any of these conditions could result in an electric shock or fire.

Periodically examine the cord of your appliance, and if its appearance indicates damage or deterioration, unplug it, discontinue use of the appliance, and have the cord replaced with an exact replacement part by an authorized servicer.

Protect the power cord from physical or mechanical abuse, such as being twisted, kinked, pinched, closed in a door, or walked upon. Pay particular attention to plugs, wall outlets, and the point where the cord exits the appliance.

CAUTION

The appliance is not intended for use by young children or infirm persons without supervision.

Young children should be supervised to ensure that they do not play with appliance.

▶ BS plug safety details (for U.K. user)

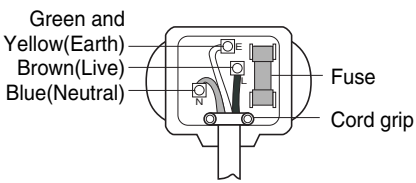

Important

The wires in this mains lead are coloured in accordance with the following code:

Green and yellow: Earth

Blue: Neutral

Brown: Live

This appliance must be earthed.

As the colours of the wires in the mains lead of this apparatus may not correspond with the coloured markings identifying the terminals in your plug, proceed as follows:

The wire which is coloured Green and Yellow must be connected to the terminal in the plug which is marked with the letter E or by the earth symbol ⏚ or coloured Green or Green and Yellow.

The wire which is coloured Blue must be connected to the terminal which is marked with the letter N or coloured Black.

The wire which is coloured Brown must be connected to the terminal which is marked with the letter L or coloured Red.

If a 13 amp (BS 1363) plug is used, fit a 13 amp BS 1362 fuse.

Installation

■ To connect water supply hose

- Water supply pressure must be between 100 kPa and 1000 kPa (1.0 ~ 10.0 kgf / cm^2)
- Do not strip or crossthread when connecting Inlet hose to the valve.
- If the water supply pressure is more than 1000 kPa, a decompression device should be installed.
- Periodically check the condition of the hose and replace the hose if necessary.

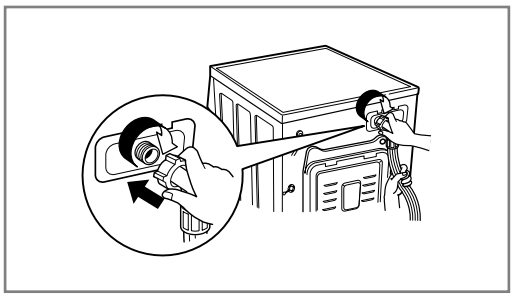

- Make sure that there are no kinks on the hose and that they are not crushed.

▶ When your washer has two valves.

- The Inlet hose which has red connector is for the hot water tap.
- If the washer has two valves, the energy is saved by using hot valve.

■ Connecting hose to water tap

Type-1: Connecting Screw-type hose to tap with thread

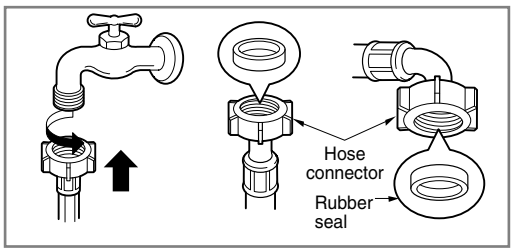

1. Screw the hose connector onto water supply tap.

NOTE

Two rubber seals are supplied with the water inlet hoses.
They are used for preventing water leaks. Make sure the connection to taps is sufficiently tight.

Type-2: Connecting Screw-type hose to tap without thread

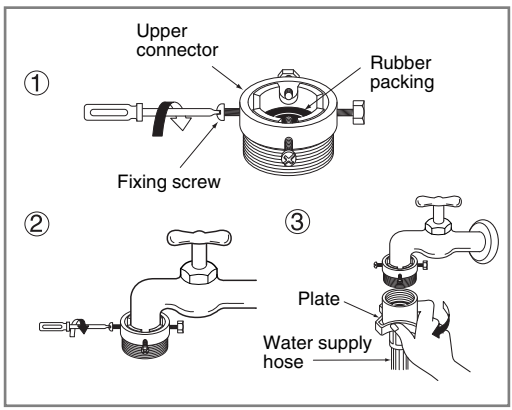

1. Unscrew the adapter ring plate and the 4 adapter retaining screws.

2. Push the adapter onto the end of the tap so that the rubber seal forms a watertight connection. Tighten the adapter ring plate and the 4 screws.

3. Push the water supply hose vertically upwards so that the rubber packing within in the hose can adhere completely to the tap and then tighten it by screwing it to the right.

Installation

Type-3: Connecting one touch type hose to tap without thread

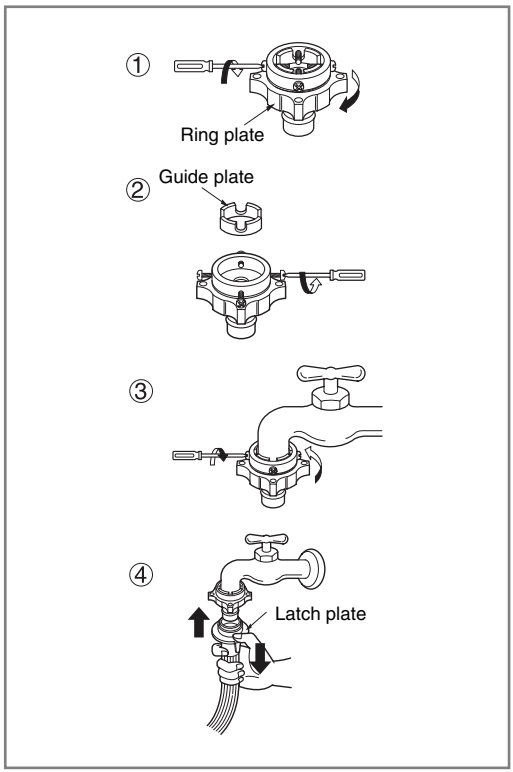

1. Unscrew the adapter ring plate and the 4 adapter retaining screws.
2. Remove the guide plate if the tap is too large to fit the adapter.
3. Push the adapter onto the end of the tap so that the rubber seal forms a watertight connection.
   Tighten the adapter ring plate and the 4 screws.
4. Pull the connector latch plate down, push the inlet hose onto the adapter, and release the connector latch plate.
   Make sure the adapter locks into place.

NOTE After completing connection, if water leaks from the hose, repeat the same steps.
Use the most conventional type of faucet for water supply. In case the faucet is square or too big, remove the spacing ring before inserting the faucet into the adaptor.

Used the horizontal tap	
Horizontal tap	
Extension tap	
Square tap	

Installation

■ Installation of drain hose

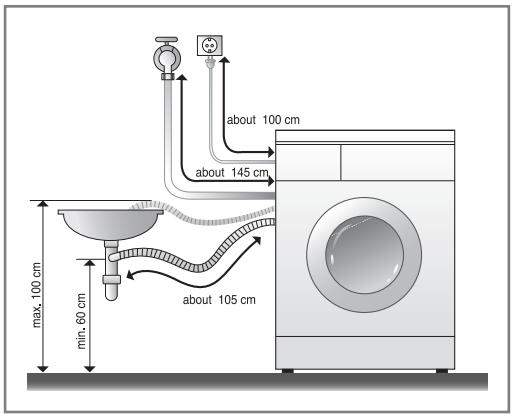

- The drain hose should not be placed higher than 100 cm above the floor. Water in the washer does not drain or drains slowly.
- Securing the drain hose correctly will protect the floor from damage due to water leakage.
- If the drain hose is too long, do not force back into the washer.
  This will cause abnormal noise.

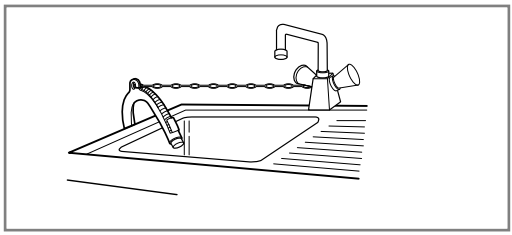

- When installing the drain hose to a sin, secure it tightly with string.
- Securing the drain hose correctly will protect the floor from damage due to water leakage.

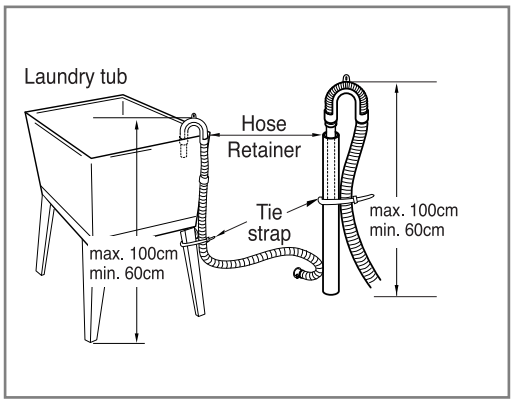

Installation

■ Leveling

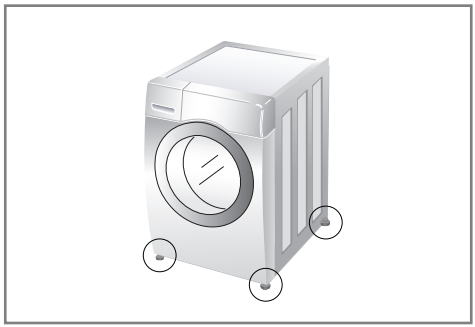

1. Leveling the washing machine properly prevents excessive noise and vibration. Install the appliance on a solid and level floor surface, preferably in a corner of the room.

NOTE Timber or suspended type flooring may contribute to excessive vibration and unbalance.

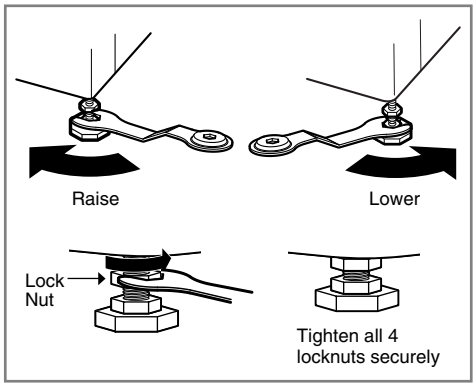

2. If the floor is uneven, turn the adjustable feet as required. (do not insert pieces of wood etc. under the feet)
Make sure that all four feet are stable and resting on the floor and then check that the appliance is perfectly level. (use a spirit level)

• Once the washer is level, tighten the lock nuts up towards the base of the washer. All lock nuts must be tightened.

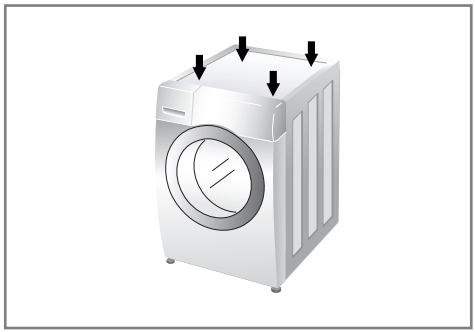

• Diagonal Check
When pushing down the edges of the washing machine top plate diagonally, the machine should not move up and down at all (Please, check both directions). If machine rocks when pushing the machine top plate diagonally, adjust the feet again.

NOTE If the washing machine is installed on a raised platform, it must be securely fastened in order to eliminate the risk of falling off.

Installation

▶ Concrete floors

- The installation surface must be clean, dry and level.
- Install washer on a flat hard floor.

▶ Tile floors (Slippery floors)

- Position each foot on the Tread Mate and level the machine to suit. (Cut Tread Mate into 70x70 mm sections and stick the pieces on to the dry tile where machine is to be placed.)
- Tread Mate is a self adhesive material used on ladders & steps that prevents slipping.

▶ Wooden floors (Suspended floors)

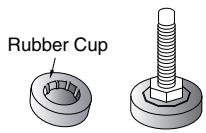

- Wooden floors are particularly susceptible to vibration.
- To prevent vibration we recommend you place rubber cups under each foot under washer at least 15mm thick, secured to at least 2 floor beams with screws.
- If possible install the washer in one of the corners of the room, where the floor is more stable.
- Insert the rubber cups to reduce vibration.
- You can obtain the rubber cups (p/no.4620ER4002B) from the LG spares dept.

NOTE

- Proper placement and levelling of the washer will ensure long, regular and reliable operation.
- The washer must be 100% horizontal and stand firmly in position.
- It must not “Seesaw” across corners under load.
- The installation surface must be clean, free from floor wax and other lubricant coatings.
- Do not let the feet of the washer get wet. If feet of the washer get wet, slipping may occur.

How to use washer

■ Operating washing machine

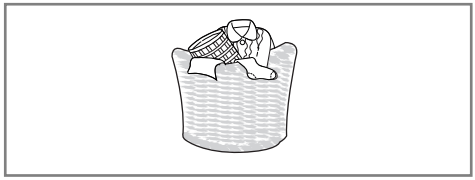

1. Sort Laundry.
(Refer to 15 page)

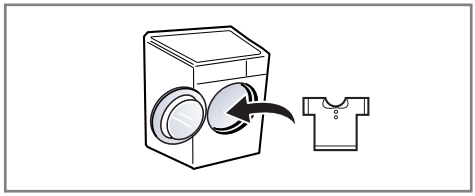

2. Open the door and load laundry.



3. Press the Power button.

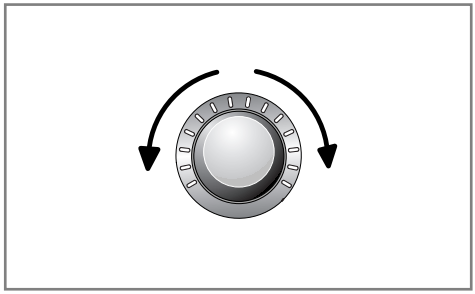

4. Select a Program.
(Refer to 16~18 page)

Select options at this time
(Refer to 20~23 page)
- ■ Additional Program
- ■ Temperature
- ■ Spin Speed
- ■ Other functions

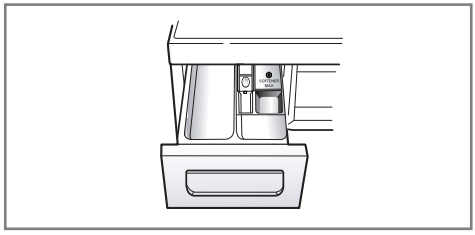

5. Add detergent.
(Refer to 25~26 page)



6. Press the Start/Pause button.

How to use washer

■ Care before washing

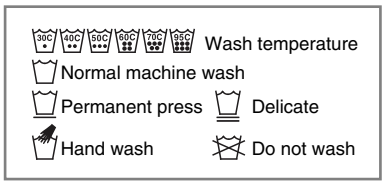

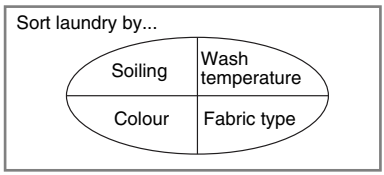

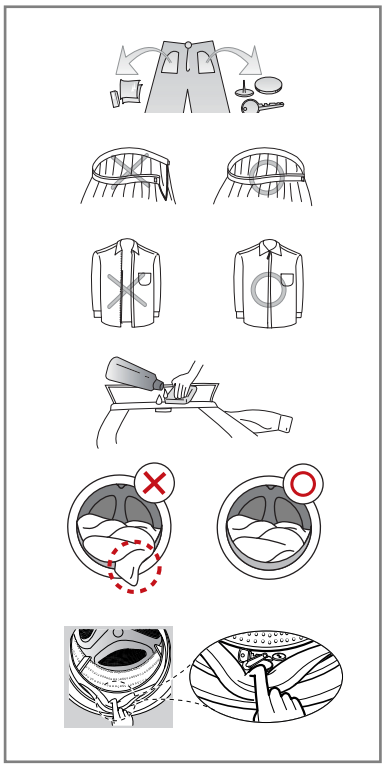

1. Care Labels

Look for a care label on your clothes.
This will tell you about the fabric content of your garment and how it should be washed.

2. Sorting

To get the best results, sort clothes into loads that can be washed with the same wash cycle.
Water temperature and spin speed and different fabrics need to be washed in different ways.
Always sort dark colors from pale colors and whites. Wash separately as dye and lint transfer can occur causing discoloration of white etc. If possible, do not wash heavily soiled items with lightly soiled one.

- Soil (Heavy, Normal, Light)
  Separate clothes according to amount of soil.
- Color (White, Lights, Darks)
  Separate white fabrics from colored fabrics.
- Lint (Lint producers, Collectors)
  Wash lint producers and lint collectors separately.

3. Caring before loading

Combine large and small items in a load. Load large items first. Large items should not be more than half the total wash load. Do not wash single items.
This may cause an out-of-balance load. Add one or two similar items.

- Check all pockets to make sure that they are empty. Items such as nails, hair clip, matches, pens, coins and keys can damage both your washer and your clothes.
- Close zippers, hooks and strings to make sure that these items don't snag on other clothes.
- Pre treat dirt and stains by brushing a little detergent dissolved in water onto stains like collars and cuffs to help lift dirt.
- Check the folds of the flexible gasket (gray) and remove any small articles.
- Check inside of the drum and remove any item from a previous wash.
- Remove any clothing or items from the flexible gasket to prevent clothing and gasket damage.

NOTE

Before the first washing, Select a cycle (Cotton 60°C, add a half load of detergent) allow the unit to wash without clothing. This will remove residues and water from the drum that may have been left during manufacturing.

How to use washer

■ Washing program table

• Recommended courses according to the laundry type.

Program	Description	Fabric type	Proper Temp.	Maximum Load
Cotton	Provides better performance by combining various drum motions.	Color fast garments (shirts, nightdresses, pajamas, etc) and lightly soiled white cotton (underwear).	40°C (Cold to 95°C)	Rating
Cotton Eco	Provide optimized washing performance with less energy consumption.		60°C (Cold to 60°C)	
Easy Care	This cycle is suitable for casual shirts that do not need ironing after washing.	Polyamide, Acrylic, Polyester.	40°C (Cold to 60°C)	4.0 kg
Mix	Enables various fabrics to be washed simultaneously.	Various kind of fabrics except special garments. (Silk/delicate, sports wear, dark clothes, wool, Duvet/Curtains).	40°C (Cold to 40°C)	
Baby care	Remove solid and protein stain and provide better rinse performance	Lightly soiled baby wear	60°C (95°C)	
Silent Wash	Provides less noise and vibration and saves money by using overnight electricity.	Color fast garments (shirts, nightdresses, pajamas, etc)and lightly soiled white cotton (underwear).	40°C (Cold to 60°C)	4.5 kg
Skin Care	Remove efficiently detergent residue in clothes	Fabrics which will be in direct contact with the skin, e.g. underwear, nappies, towelling, bed linen, pillow and mattress covers		Rating
Duvet	This cycle is for large items such as bed cover, pillows, sofa covers, etc.	Cotton bedding except special garments (delicates, wool, silk, etc.) with filling: duvets, pillows, blankets, sofa covers with light filling.	40°C (Cold to 40°C)	1 single size
Sports Wear	This cycle is suitable for sports wear such as jogging clothes and running wear.	Coolmax, Gore-tex, fleece and Sympatex.		2.0 kg
Dark Wash	If it's possible for clothes to decolorate, please use this cycle. The cycle prevent decolorization. (Please use detergent for colored fabrics.)	Dark garments made from cotton or mixed fabrics.	30°C (Cold to 40°C)	
Delicate	This cycle is for delicate clothes such as underwear, blouse, etc.	Delicate, easily damaged laundry.		
Wool	Enable to wash wool fabrics. (Please use detergent for machinewashable woolens).	Machine washable woolens with pure new wool only.	40°C (Cold to 40°C)	
Quick 30	This cycle provides fast washing time for small loads and lightly soiled clothes.	Colored laundry which is lightly soiled fast.	30°C (Cold to 40°C)	
Intensive 60	Within 60mins provide better washing performance and energy efficiency.	Cotton and mix fabrics. (Special PROGRAM within 60 mins for normally soiled laundry).	60°C (Cold to 60°C)	4.0 kg

How to use washer

- Water Temperature: Select water temperature to suit wash cycles.
  Always follow garment manufacture's care label or instructions when washing.
- Set program at "Cotton Eco 60°C + Intensive" option for test in accordance in conformity with EN60456 and IEC60456.
- The test results depend on water pressure, water hardness, water inlet temperature, room temperature, type and amount of load, degree of soiling utilized detergent, fluctuations in the main electricity supply and chosen additional options.



The wool wash cycle of this machine has been approved by Woolmark for the washing of machine washable Woolmark products provided that the products are washed according to the instructions on the garment label and those issued by the manufacturer of this washing machine M1009.

NOTE

Neutral detergent is recommended.
The wool cycle features gentle tumbling and low-speed spin for garment care.

■ Extra options

Program	Time Delay	Crease Care	Favorite	Pre Wash	Medic Rinse	Rinse + Spin	Time Save	Intensive
Cotton	●	●	●	●	●	●	●	●
Cotton Eco	●	●	●	●	●	●	●	●
Easy Care	●	●	●	●	●	●	●	●
Mix	●	●	●	●	●	●	●	●
Baby Care	●	●	●	●*	●*	●		●
Silent Wash	●	●	●			●	●	●
Skin Care	●	●	●	●	●	●	●	●
Duvet	●	●	●			●	●	●
Sports Wear	●	●	●			●	●	●
Dark Wash	●	●	●			●	●	●
Delicate	●	●	●			●	●	●
Wool	●	●	●			●		●
Quick 30	●	●	●			●		●
Intensive 60	●	●	●			●		●*

* : This option is automatically included in the cycle and can not be deleted.

How to use washer

■ Operating data

Program	Max RPM		
	F14**	F12**	F10**
Cotton	1400	1200	1000
Cotton Eco	1400	1200	1000
Easy Care	1000	1000	1000
Slient Wash	1000	1000	1000
Mix	1400	1200	1000
Duvet	1000	1000	1000
Baby Care	1000	1000	1000
Skin Care	1400	1200	1000
Sports Wear	800	800	800
Dark Wash	1400	1200	1000
Delicate	800	800	800
Wool	800	800	800
Quick 30	1400	1200	1000
Intensive 60	1400	1200	1000

How to use washer

■ Control panel

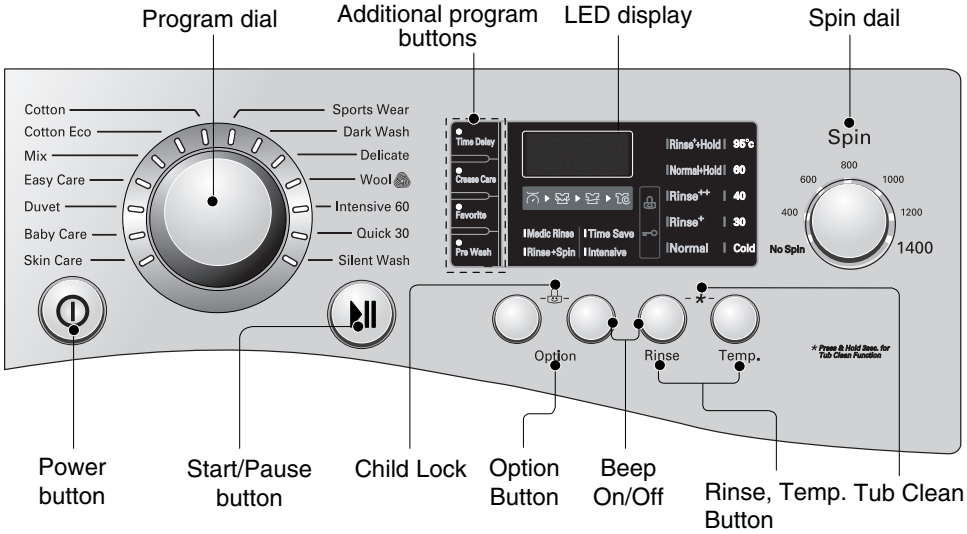

Power

- Press the Power button to turn power on and off.
- To cancel the Time Delay function, the power button should be pressed.

Additional program

- Use these buttons to select the desired cycle options for the selected cycle.

Program dial

- Programs are available according to the laundry type.
- Lamp will light up to indicate selected program.

LED display

- The display shows the settings, estimated time remaining, options, and status messages for your washer. The display will remain on through the cycle.

Start/Pause

- This **Start**/**Pause** button is used to start wash cycle or pause the wash cycle.
- If temporary stop of wash cycle is needed, press the **Start**/**Pause** button.
- When in Pause, the power is turned off automatically after 4 minutes.

Options

- This allows you to select addition cycle and will light when select.

How to use washer

■ Additional program

Time Delay

You can set a time delay so that the washing machine will start automatically and finish after a specified time interval.

NOTE

The delay time is the time to the end of the programme, not the start. The actual running time may vary due to water temperature, wash load and other factors.

1. Press the Power button.
2. Select a cycle.
3. Press the Time Delay button and set time required.
4. Press the Start/Pause button.

Favorite

Favorite program allows you to store a customized wash cycle for future use.

1. Press the Power button.
2. Select a cycle.
3. Select the course.
(Washing method, number of rinses, spin speed, water temperature etc.)
4. Press and hold Favorite program button 3 seconds.

The Favorite program is now stored for future use.
To reuse the program, select Favorite program and press the Start/Pause.

Crease Care

If you want to prevent creasing, select Crease Care option.

Pre Wash

If the laundry is heavily soiled, “Pre Wash” course is effective.

1. Press the Power button.
2. Select a cycle
3. Press the Pre Wash button.
4. Press the Start/Pause button.

How to use washer

■ Options

Option

- **Medic Rinse :** For best results or for cleaner rinsing.
- **Rinse+Spin :** This can be helpful in preventing fresh stains from setting in fabrics. This is a separate cycle.
- **Time Save :** This option can be used to reduce the time of a wash program.
- **Intensive :** If the laundry is normal and heavily soiled, “Intensive” option is effective.

Rinse

- **Rinse^{+}+Hold :** Add rinse once then after rinsing process, the course is paused until start button is pressed again.
- **Normal+Hold :** The course is paused until start button is pressed again when rinse is finished.
- **Rinse^{++} :** Add rinse twice.
- **Rinse^{+} :** Add rinse once.

Temp.

- By pressing the Temp. button the water temperature can be selected.
  - Cold
  - 30°C, 40°C, 60°C, 95°C
- Water temperature can be selected according to the program.

■ Other functions

Rinse+Spin

1. Press the Power button.

2. Select a cycle.

3. Press the Option button (Rinse+Spin light up).

4. Press the Start/Pause.

Spin Only

1. Press the Power button.

2. Select the spin speed.

3. Press the Start/Pause.

NOTE

When you select "No Spin", it will still rotate for a short time with low speed to drain quickly.

How to use washer

■ Child Lock

Select this function to lock the buttons on the control assembly to prevent tampering.
"Child Lock" can be set only during the washing cycle.

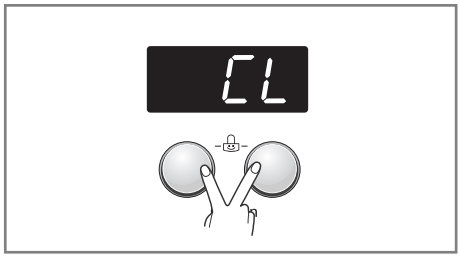

Locking the control panel

1. Press the Option buttons simultaneously for 3 seconds.
2. A beeper will sound, and ' CL ' will appear momentarily on the LED Display.
   When the child lock is set, all buttons are locked except for the Power button.

NOTE

When child lock is activated the LED display will alternate between " CL " and time remaining.
Turning off the power will not reset the child lock function. you must deactivate child lock before you can access any other functions.

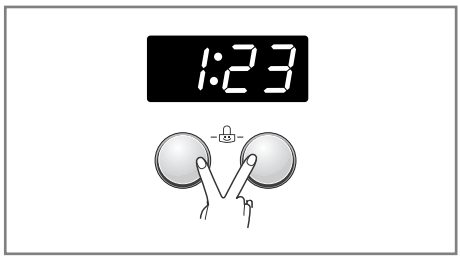

Unlocking the control panel

1. Press the Option buttons simultaneously for 3 seconds.
2. A beeper will sound and the remaining time for the current programme will reappear on the LED Display.

■ Beep On / Off

The Beep on/off function can be set only during the washing cycle.

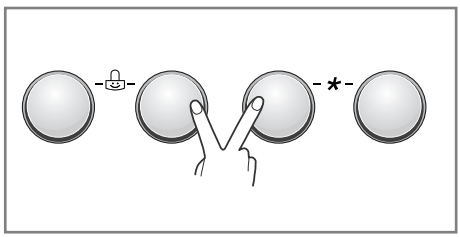

1. Press the Power button.
2. Press the Start/Pause button.
3. Press and hold the Option and Rinse button simultaneously for three seconds to set Beep on/off function.

Once the Beep on/off function is set, the setting is memorized even after Power turned off.

NOTE

If you want to turn off Beeper simply repeat this process

How to use washer

■ Tub Clean

Tub Clean is special cycle to clean the inside of the washing machine.
A higher water level is used in this cyle at higher spin speed. Perform this cycle regularly.

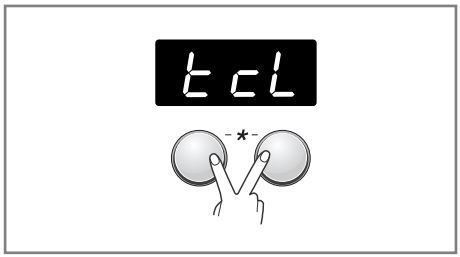

1. Remove any clothing or items from the washer and close the door.
2. Open the dispenser drawer and add Anti limescale (e.g. Calgon) to the Main wash compartment.
3. Close the dispenser drawer slowly.
4. Power On and then press and hold **Rinse** and **Temp.** button for 3 seconds. then "tcL" will be displayed on the LED display.
5. Press the Start/Pause button to start.
6. After the cycle is complete, leave the door open to allow the washer door opening, flexible gasket and door glass to dry.

NOTE

Do not add any detergent to the detergent compartments.
Excessive suds may generate and leak from the washer.

CAUTION

If there is a small child, be careful not to leave the door open for too long.

■ Door Lock & Detecting

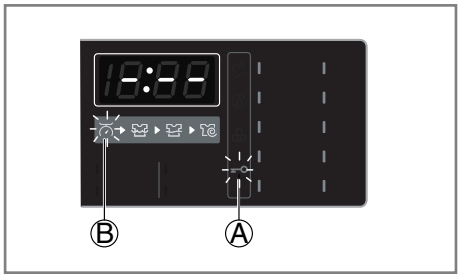

- Ⓐ **"Door Lock"** - For safety reasons, the door will lock while machine is in use and the "Door Lock" icon will light up. You can safely open the door after the "Door Lock" icon turns off.
- Ⓑ **"Detecting"** icon will light up, when washing machining rotates slowly and detects how much laundry is loaded in the drum.
  It will take a short time.

Adding detergent

■ Adding detergent and fabric softener

▶ The dispenser drawer

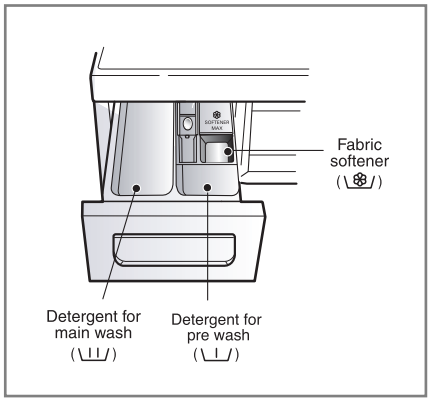

- Main wash only ➔ \II/
- Pre Wash + Main Wash ➔ \I/ • \II/

Warning

Keep all washing detergents away from children as there is danger of poisoning.

▶ Adding fabric softener

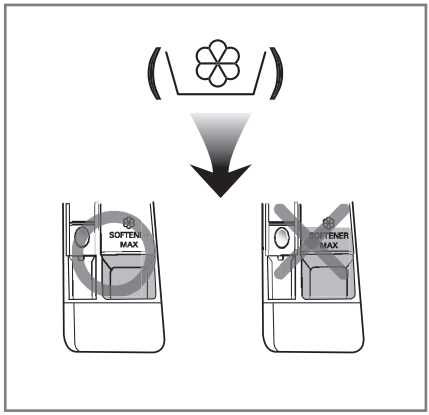

- Do not exceed the maximum fill line. Overfilling can cause early dispensing of the fabric softener which could stain clothes. Close the dispenser drawer slowly.
- Do not leave the fabric softener in the detergent drawer for more than 2 days. (Fabric softener could harden)
- Softener will automatically be added during the last rinse cycle.
- Do not open the drawer when water is supplied.
- Solvents(benzene, etc) are not allowable.

NOTE Do not pour fabric softener directly on the clothes.

Adding detergent

▶ Detergent dosage

- Detergent should be used according to the instruction of the detergent manufacture.
- If too much detergent is used, too many suds can occur and this will decrease the washing result or cause heavy load to the motor.
- Use powder detergent only for the front loading washer.
- If too many suds occur, please reduce the detergent amount.
- Detergent usage may need to be adjusted for water temperature, water hardness, size and soil level of the load. For best results, avoid oversudsing.

NOTE

- Full load : according to manufacturer's recommendation.
- Part load : 3/4 of the normal amount.
- Minimum load : 1/2 of full load.

- Detergent is flushed from the dispenser at the beginning of the cycle.

▶ Adding water softener

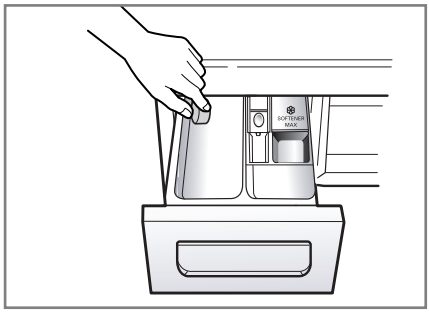

- A water softener, such as Anti-limescale (e.g. Calgon) can be used to cut down on the use of detergent in extremely hard water areas. Dispense according to the amount specified on the packaging.
  First add detergent and then the water softener.
- Use the quantity of detergent as for soft water.

▶ Using the tablets

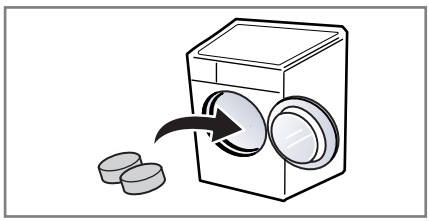

1. Open the door and put tablets into the drum.

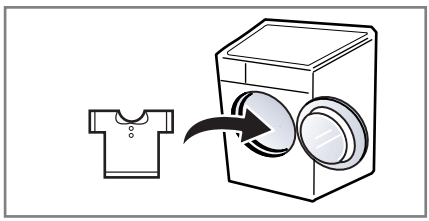

2. Load the laundry into the drum and close the door.

Maintenance

- Before cleaning the washer interior, unplug the electrical power cord to avoid electrical shock hazards.
- Turn off the stopcock if the machine is to be left for any length of time (e.g. holiday), especially if there is no floor drain(gully) in the immediate vicinity.
- When disposing of the appliance, cut off the main power cable, and destroy the plug.
- Disable the door lock to prevent young children being trapped inside.

■ The water inlet filter

- " IE " error message will blink on the control panel when water does not enter the detergent drawer.
- If water is very hard or contains traces of lime deposit, the water inlet filter may become clogged.
  It is therefore a good idea to clean it from time to time.

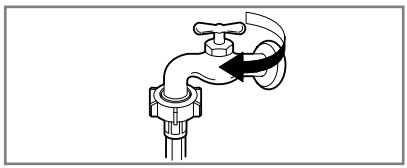

1. Turn off the water tap.

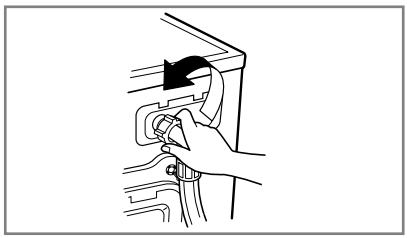

2. Unscrew the water inlet hose.

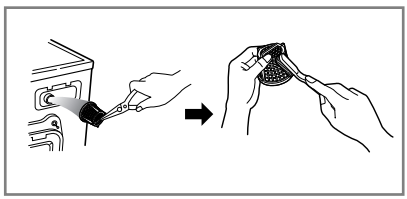

3. Clean the filter using a hard bristle brush.

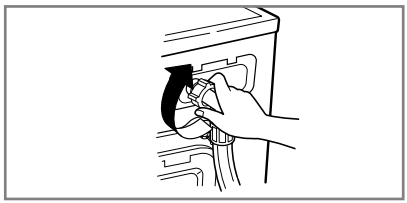

4. Tighten up the inlet hose.

Maintenance

■ The drain pump filter

• The drain filter collects threads and small objects left in the laundry.
Check regularly that the filter is clean to ensure smooth running of your machine.

CAUTION

First drain using the drain hose and then open the pump filter to remove any threads or objects.
Be careful when draining if the water is hot.

• Allow the water to cool down before cleaning the drain pump, carrying out emergency emptying or opening the door in an emergency.

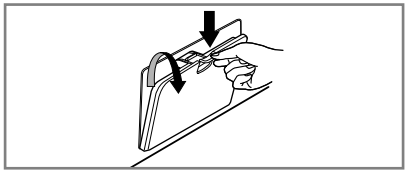

1. Open the lower cover cap.
pull out the hose.

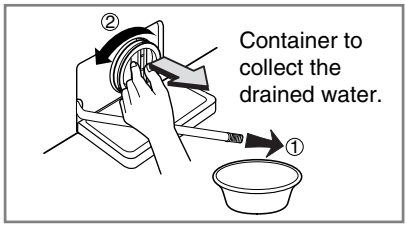

2. Unplug the drain plug.
Open the filter by turning to the left.

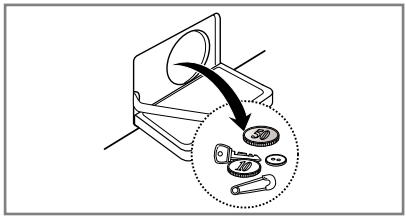

3. Remove any extraneous matter from the pump filter.

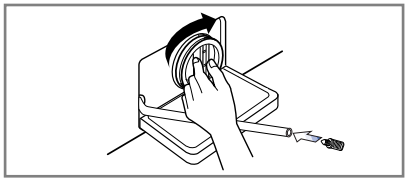

4. After cleaning, turn the pump filter and insert the drain plug.

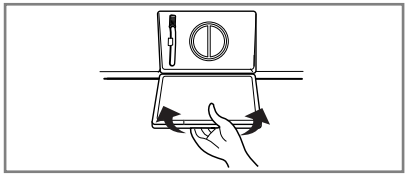

5. Close the lower cover cap.

Maintenance

■ Dispenser drawer

- After a while, detergents and fabric softeners leave a deposit in the drawer.
- It should be cleaned from time to time with a jet of running water.
- If necessary it can be removed completely from the machine by pressing the catch downwards and by pulling it out.
- To facilitate cleaning, the upper part of the fabric softener compartment can be removed.

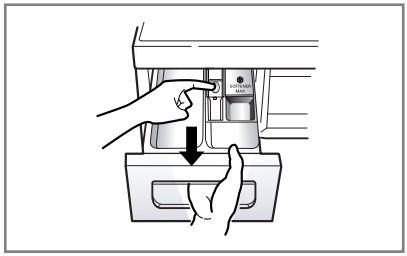

1. Pull out the dispenser drawer.

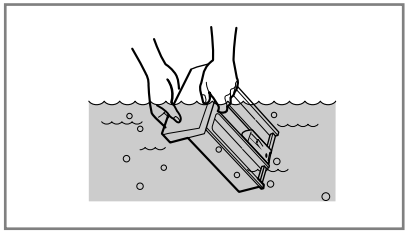

2. Clean the dispenser drawer under flowing water.

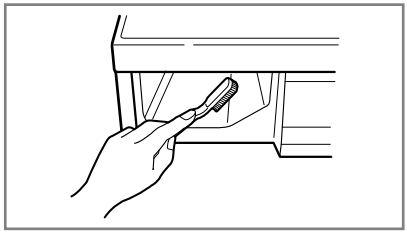

3. Clean inside the recess with an old toothbrush.

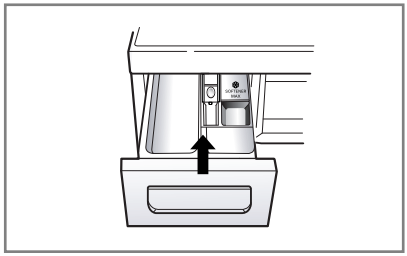

4. Insert the dispenser drawer.

Maintenance

■ The washing drum

- If you live in a hard water area, limescale may build up continuously in places where it cannot be seen and thus not easily removed. Over time the build up of scale clogs appliances, and if it is not kept in check these may have to be replaced.
- Although the washing drum is made of Stainless steel, specks of rust can be caused by small metal articles (paper clips, safety pins) which have been left in the drum.
- The washing drum should be cleaned from time to time.
- If you use descaling agents, dyes or bleaches, make sure they are suitable for washing machine use.
- Descaler may contain chemicals that may damage part of your washing machine.
- Remove any spots with a stainless steel cleaning agent.
- Never use steel wool.

■ Cleaning your washer

▶ Exterior

- Proper care of your washer can extend its life.
- The outside of the machine can be cleaned with warm water and a neutral non abrasive household detergent.
- Immediately wipe off any spills. Wipe with damp cloth.
- Try not to hit surface with sharp objects.
- Do not use methylated spirits, diluents or similar products.

▶ Interior

- Dry around the washer door opening, flexible gasket and door glass.
- Run washer through a complete cycle using hot water.
- Repeat process if necessary.



To remove hard water deposits, use only cleaners labeled washer safe.

■ Cold conditions

If the washer is stored in an area where freezing may occur or moved in freezing temperatures, follow these instructions to prevent damage to the washer:

- Turn off water supply tap.
- Disconnect hoses from water supply and drain water from hoses.
- Plug electrical cord into a properly grounded electrical outlet.
- Add 1gallon (3.8L) of nontoxic recreational vehicle(RV) antifreeze into an empty wash drum. Close the door.
- Set spin cycle and let washer spin for 1minute to drain out all water.Not all of the RV antifreeze will be expelled.
- Unplug electrical power cord, dry the drum interior, and close the door.
- Remove dispenser drawer, drain and dry excess water from the compartments.
- Store washer in an upright position.
- To remove antifreeze from washer after storage, run empty washer through a complete cycle using detergent. Do not add wash load.

Troubleshooting guide

- This washing machine is equipped with automatic safety functions which detect and diagnose faults at an early stage and react appropriately
  When the machine does not function properly or does not function at all, check the following points before you contact your service provider.

■ Diagnosing Problem

Symptom	Possible Cause	Solution
Rattling and clanking noise	• Foreign objects such as coins or safety pins maybe in drum or pump.	Stop washer and check drum and drain filter. If noise continues after washer is restarted, call your authorised service centre.
Thumping sound	• Heavy wash loads may produce a thumping sound. This is usually normal.	If sound continues, washer is probably out of balance. Stop and redistribute wash load.
Vibrating noise	• Have all the transit bolts and packing been removed? • Are all the feet resting firmly on the ground?	If not removed during installation. Refer to Installation guide for removing transit bolts. Wash load may be unevenly distributed in drum. Stop washer and rearrange wash load.
Water leaks.	• Fill hoses or drain hose are loose at tap or washer.	Check and tighten hose connections.
	• House drain pipes are clogged.	Unclog drain pipe. Contact plumber if necessary.
Oversudsing		Too much detergent or unsuitable detergent may cause excessive foaming which may result in water leaks.
Water does not enter washer or it enters slowly	• Water supply is not adequate in area.	Check another tap in the house.
	• Water supply tap is not completely open.	Fully open tap.
	• Water inlet hose(s) are kinked.	Straighten hose.
	• The filter of the inlet hose(s) clogged.	Check the filter of the inlet hose.
Water in the washer does not drain or drains slowly.	• Drain hose is kinked or clogged.	Clean and straighten the drain hose.
	• The drain filter is clogged.	Clean the drain filter

Troubleshooting guide

Symptom	Possible Cause	Solution
Washer does not start	• Electrical power cord may not be plugged in or connection may be loose.	Make sure plug fits tightly in wall outlet.
	• House fuse blown, circuit breaker tripped,or a power outage has occurred.	Reset circuit breaker or replace fuse. Do not increase fuse capacity. If problem is a circuit overload, have it corrected by a qualified electrician.
	• Water supply tap is not turned on.	Turn on water supply tap.
Washer will not spin	• Check that the door is firmly shut.	Close the door and press the Start/Pause button. After pressing the Start/Pause button, it may take a few moments before the clothes washer begins to spin. The door must lock before spin can be achieved.
Door does not open		Once machine has started, the door cannot be opened for safety reasons. Check if the “Door Lock” icon is illuminated. You can safely open the door after the “Door Lock” icon turns off.
Wash cycle time delayed		The washing time may vary by the amount of laundry, water pressure, water temperature and other usage conditions. If the imbalance is detected or if the suds removing program works, the wash time shall be increased.

Troubleshooting guide

■ Error Messages

Symptom	Possible Cause	Solution
1E	• Water supply is not adequate in area. • Water supply taps are not completely open. • Water inlet hose(s) are kinked. • The filter of the inlet hose(s) are clogged.	Check another tap in the house. Fully open tap. Straighten hose(s). Check the filter of the inlet hose.
OE	• Drain hose is kinked or clogged. • The drain filter is clogged.	Clean and straighten the drain hose. Clean the drain filter.
UE	• Load is too small. • Load is out of balance. • The appliance has an imbalance detection and correction system. If individual heavy articles are loaded (ex. bath mat, bath robe, etc.) this system may stop spinning or even interrupt the spin cycle altogether. • If the laundry is still too wet at the end of the cycle, add smaller articles of laundry to balance the load and repeat the spin cycle.	Add 1 or 2 similar items to help balance the load. Rearrange load to allow proper spinning.
dE	 • Ensure door is not open.	Close the door completely. ∗If "dE "is not released, call for service. (✆ +44-(0) 844 847 LGLG(5454))
tE		Unplug the power plug and call for service. (✆ +44-(0) 844 847 LGLG(5454))
FE	• Water overfills due to the faulty water valve.	Close the water tap. Unplug the power plug. Call for service. (✆ +44-(0) 844 847 LGLG(5454))
PE	• Water level sensor has malfunctioned.	
LE	• Over load in motor.	Allow the washer to stand for 30minutes to allow the motor cool; then restart the cycle.
PF	• The washer experienced a power failure.	Restart the cycle.

Terms of Warranty

Disposal of your old appliance

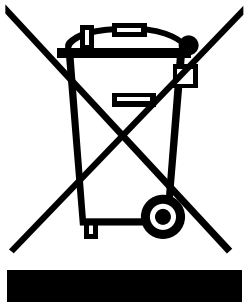

1. When this crossed-out wheeled bin symbol is attached to a product it means the product is covered by the European Directive 2002/96/EC.
2. All electrical and electronic products should be disposed of separately from the municipal waste stream via designated collection facilities appointed by the government or the local authorities.
3. The correct disposal of your old appliance will help prevent potential negative consequences for the environment and human health.
4. For more detailed information about disposal of your old appliance, please contact your city office, waste disposal service or the shop where you purchased the product.

NOTE When disposing of the appliance, cut off the mains cable, and destroy the plug
Disable the door lock to prevent young children being trapped inside.

What Is Not Covered:

- Service trips to your home to teach you how to use the product.
- If the product is connected to any voltage other than that shown on the rating plate.
- If the fault is caused by accident, neglect, misuse or Act of God.
- If the fault is caused by factors other than normal domestic use or use in accordance with the owner's manual.
- Provide instruction on use of product or change the set-up of the product.
- If the fault is caused by pests for example, rats or cockroaches, etc.
- Noise or vibration that is considered normal, for example water drain sound, spin sound, or warning beeps.
- Correcting the installation. For example, levelling the product, adjustment of drain.
- Normal maintenance which is recommended by the owner's manual.
- Removal of foreign objects / substances from the machine, including the pump and inlet hose filter, For example, grit, nails, bra wires, buttons etc.
- Replace fuses in or correct house wiring or correct house plumbing.
- Correction of unauthorized repairs.
- Incidental or consequential damage to personal property caused by possible defects with this appliance.
- If this product is used for commercial purpose, it is not warranted.
  (Example : Public places such as public bathroom, lodging house, training center, dormitory)

If the product is installed outside the normal service area, any cost of transportation involved in the repair of the product, or the replacement of a defective part, shall be borne by the owner.

Memo

Memo



LG
Life's Good

CUSTOMER SERVICES Tel. : +44-(0) 844 847 LGLG(5454)
Fax. : +44-(0) 844 847 1413
LGEUK SERVICE WEB-SITE : http://www.lge.co.uk

For U.K. Customer