LG
Life's Good

OWNER'S MANUAL

NEW TYPE CYCLONE VACUUM CLEANER

This information contains important instructions for the safe use and maintenance of the vacuum cleaner. Especially, please read all of the information on page 4, 5 for your safety. Please keep this manual in an easily accessible place and refer to it anytime.

VK9820****

P/No.: MFL57001301

www.lg.com

Table of contents

Important safety instructions ..... **4~5**

How to use **6**

Assembling vacuum cleaner 6

Operating vacuum cleaner 8

Using carpet and floor nozzle 9

Using all floor and mini turbine nozzle 10

Using accessory nozzles 11

Using the sani punch nozzle .....12~16

Emptying dust tank 17

Cleaning dust tank 18

Dust separator clean alarm display 19

Cleaning air filter and motor safety filter 20

Cleaning exhaust filter 21

Check before requesting for service .....22~23

Trouble shooting ..... **24~25**

IMPORTANT SAFETY INSTRUCTIONS

Read and follow all instructions before using your vacuum cleaner to prevent the risk of fire,electric shock, personal injury, or damage when using the vacuum cleaner. This guide do not cover all possible conditions that may occur. Always contact your service agent or manufacturer about problems that you do not understand. This appliance complies with the following EC Directives :-2006/95/EC Low Voltage Directive -2004/108/EC EMC Directive.

This is the safety alert symbol.
This symbol alerts you to potential hazards that can kill or hurt you and others.
All safety messages will follow the safety alert symbol and either the word “WARNING” or “CAUTION.”
These words mean:

WARNING This symbol will alert you to hazards or unsafe practices which could cause serious bodily harm or death.

CAUTION This symbol will alert you to hazards or unsafe practices which could cause bodily injury or property damage.

WARNING

- **Do not plug in if control knob is not in OFF position.**
  Personal injury or product damage could result.
- **Keep children away and beware of obstructions when rewinding the cord to prevent personal injury**
  The cord moves rapidly when rewinding.
- **Disconnect electrical supply before servicing or cleaning the unit or when cleaner is not in use.**
  Failure to do so could result in electrical shock or personal injury.
- **Do not use vacuum cleaner to pick up anything that is burning or smoking such as cigarettes, or hot ashes.**
  Doing so could result in death, fire or electrical shock.
- **Do not vacuum flammable or explosive substances such as gasoline, benzene, thinners, propane (liquids or gases).**
  The fumes from these substances can create a fire hazard or explosion. Doing so could result in death or personal injury.
- **Do not handle plug or vacuum cleaner with wet hands.**
  Doing so could result in death or electrical shock.
- **Do not unplug by pulling on cord.**
  Doing so could result in product damage or electrical shock. To unplug, grasp the plug, not the cord.
- **Keep hair, loose clothing, fingers, and all parts of the body away from openings and moving parts.**
  Failure to do so could result in electrical shock or personal injury.
- **Do not pull or carry by cord, use cord as a handle, close a door on cord, or pull cord around sharp edges or corners. Do not run vacuum cleaner over cord. Keep cord away from heated surfaces.**
  Failure to do so could result in electrical shock or personal injury or fire or product damage.
- **The hose contains electrical wires. Do not use it if it is damaged, cut or punctured.**
  Failure to do so could result in death,or electrical shock.
- **Do not allow to be used as toy. Close attention is necessary when used by or near children.**
  Personal injury or product damage could result.
- **Do not use the vacuum cleaner if the power cord or plug is damaged or faulty.**
  Personal injury or product damage could result. In these cases, contact LG Electronics Service Agent to avoid hazard.
- **Do not use vacuum cleaner if it has been under water.**
  Personal injury or product damage could result. In these cases, contact LG Electronics Service Agent to avoid hazard.
- **Do not continue to vacuum if any parts appear missing or damaged.**
  Personal injury or product damage could result. In these cases, contact LG Electronics Service Agent to avoid hazard.
- **Do not use an extension cord with this vacuum cleaner**
  Fire hazard or product damage could result.
- **Using proper voltage.**
  Using improper voltage may result in damage to the motor and possible injury to the user. Proper voltage is listed on the bottom of vacuum cleaner.
- **Turn off all controls before unplugging.**
  Failure to do so could result in electrical shock or personal injury.
- **Do not change the plug in any way.**
  Failure to do so could result in electrical shock or personal injury or product damage. Doing so result in death. If plug does not fit, contact a qualified electrician to install the proper outlet.
  If the supply cord is damaged, it must be replaced by the manufacturer, its service agent or similarly qualified persons in order to avoid a hazard.
- **Repairs to electrical appliances may only be performed by qualified service engineers.**
  Improper repairs may lead to serious hazards for the user.
- **Do not put fingers near the gear.**
  Failure to do so could result in personal injury.

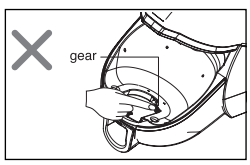

IMPORTANT SAFETY INSTRUCTIONS

⚠ CAUTION

- **Do not put any objects into openings.**
  Failure to do so could result in product damage.
- **Do not use with any opening blocked: keep free of dust, lint, hair, and anything that may reduce air flow.**
  Failure to do so could result in product damage.
- **Do not use vacuum cleaner without dust tank and/or filters in place.**
  Failure to do so could result in product damage.
- **Always clean the dust bin after vacuuming carpet cleaners or fresheners, powders and fine dust.**
  These products clog the filters, reduce airflow and can cause damage to the cleaner. Failure to clean the dust bin could cause permanent damage to the cleaner.
- **Do not use vacuum cleaner to pick up sharp hard objects, small toys, pins, paper clips, etc.**
  They may damage the cleaner or dust bin.
- **Store the vacuum cleaner indoors.**
  Put the vacuum cleaner away after use to prevent tripping over it.
- **The vacuum cleaner is not intended to use by young children or infirm people without supervision.**
  Failure to do so could result in personal injury or product damage.
- **Only use parts produced or recommended by LG Electronics Service Agents.**
  Failure to do so could result in product damage.
- **Use only as described in this manual. Use only with LG recommended or approved attachments and accessories.**
  Failure to do so could result in personal injury or product damage.
- **To avoid personal injury and to prevent the machine from falling when cleaning stairs, always place it at the bottom of stairs.**
  Failure to do so could result in personal injury or product damage.
- **Use accessory nozzles in sofa mode.**
  Failure to do so could result in product damage.
- **Don't grasp the tank handle when you are moving the vacuum cleaner.**
  The vacuum cleaner's body may fall when separating tank and body. Personal injury or product damage could result. You should grasp the carrier handle when you are moving the vacuum cleaner. (Page 10)
- **If after emptying the dust tank the indicator light is on(red), clean the dust tank.**
  Failure to do so could result in product damage.
- **Make sure the filters (exhaust filter and motor safety filter) are completely dry before replacing in the machine.**
  Failure to do so could result in product damage.
- **Do not dry the filter in an oven or microwave.**
  Failure to do so could result in fire hazard.
- **Do not dry the filter in a clothes dryer.**
  Failure to do so could result in fire hazard.
- **Do not dry near an open flame.**
  Failure to do so could result in fire hazard.
- **Do not use filters that is not dried.**
- **If the power cord is damaged, it must be replaced by an approved LG Electronics Service Agent to avoid a hazard.**
- **This appliance is not intended for use by persons (including children) with reduced physical, sensory or mental capabilities, or lack of experience and knowledge, unless they have been given supervision or instruction concerning use of the appliance by a person responsible for their safety.**
  Children should be supervised to ensure that they do not play with the appliance.

Thermal protector :

This vacuum cleaner has a special thermostat that protects the vacuum cleaner in case of motor overheating. If the vacuum cleaner suddenly shuts off, turn off the switch and unplug the vacuum cleaner. Check the vacuum cleaner for possible source of overheating such as a full dust tank, a blocked hose or clogged filter. If these conditions are found, fix them and wait at least 30 minutes before attempting to use the vacuum cleaner. After the 30 minute period, plug the vacuum cleaner back in and turn on the switch. If the vacuum cleaner still does not run, contact a qualified electrician.

How to Use **Assembling vacuum cleaner**

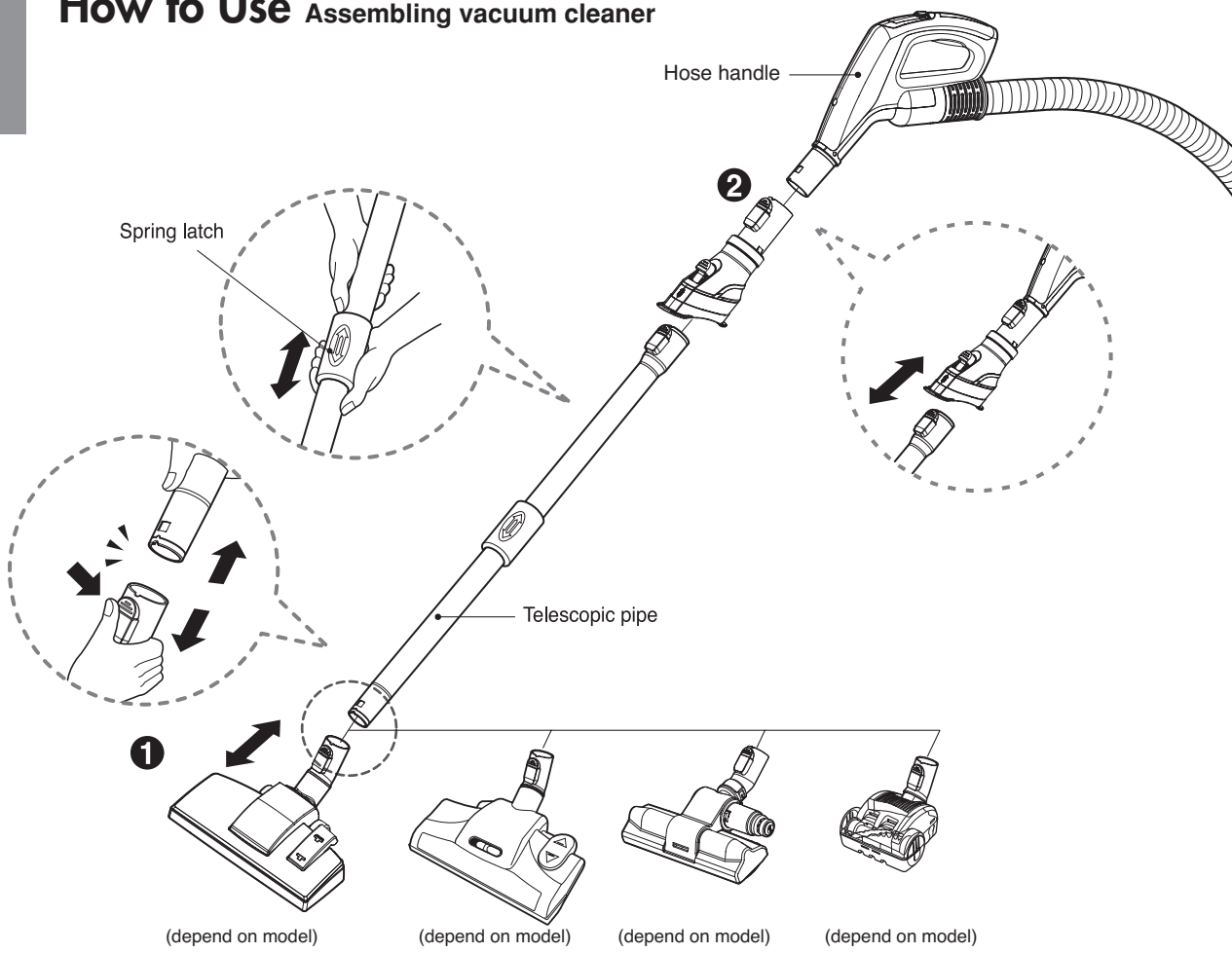

❶ Carpet and floor nozzle (depend on model)

Push the nozzle into the telescopic pipe.

❷ Telescopic pipe

- Push telescopic pipe firmly into hose handle.
- Grasp the spring latch to expand.
- Pull out the pipe to desired length.

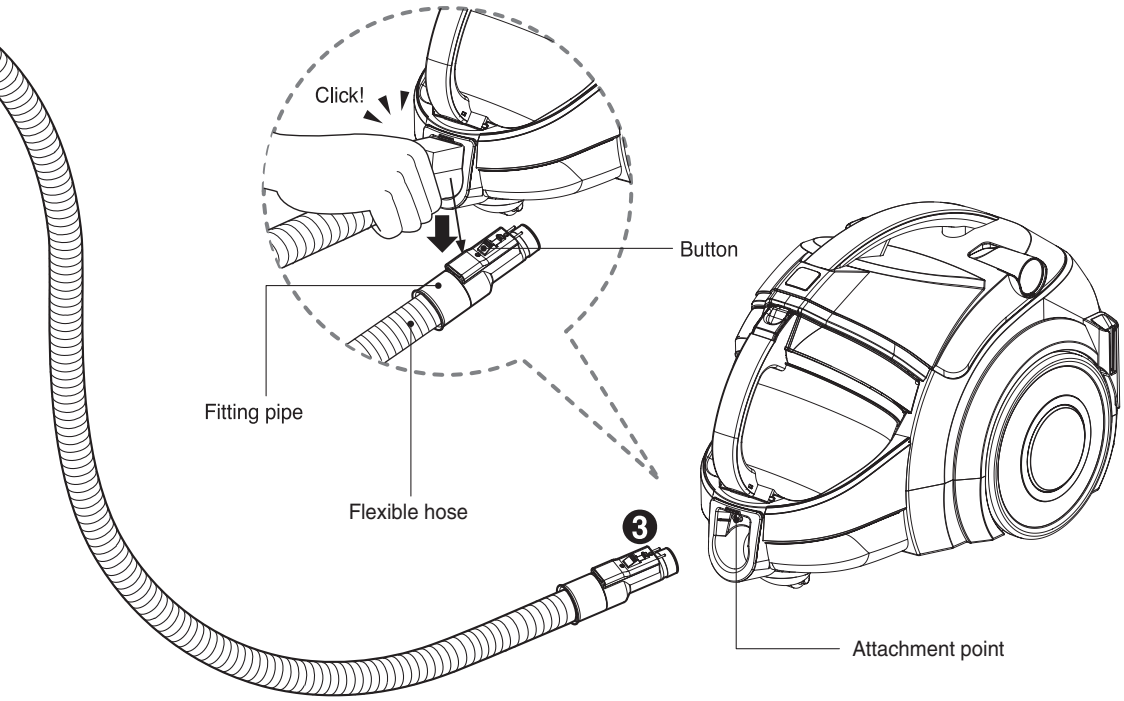

❸ Connecting the hose to the vacuum cleaner

Push the fitting pipe on the flexible hose into the attachment point on the vacuum cleaner. To remove the flexible hose from the vacuum cleaner, press the button situated on the fitting pipe, then pull the fitting pipe out of the vacuum cleaner.

How to Use Operating vacuum cleaner

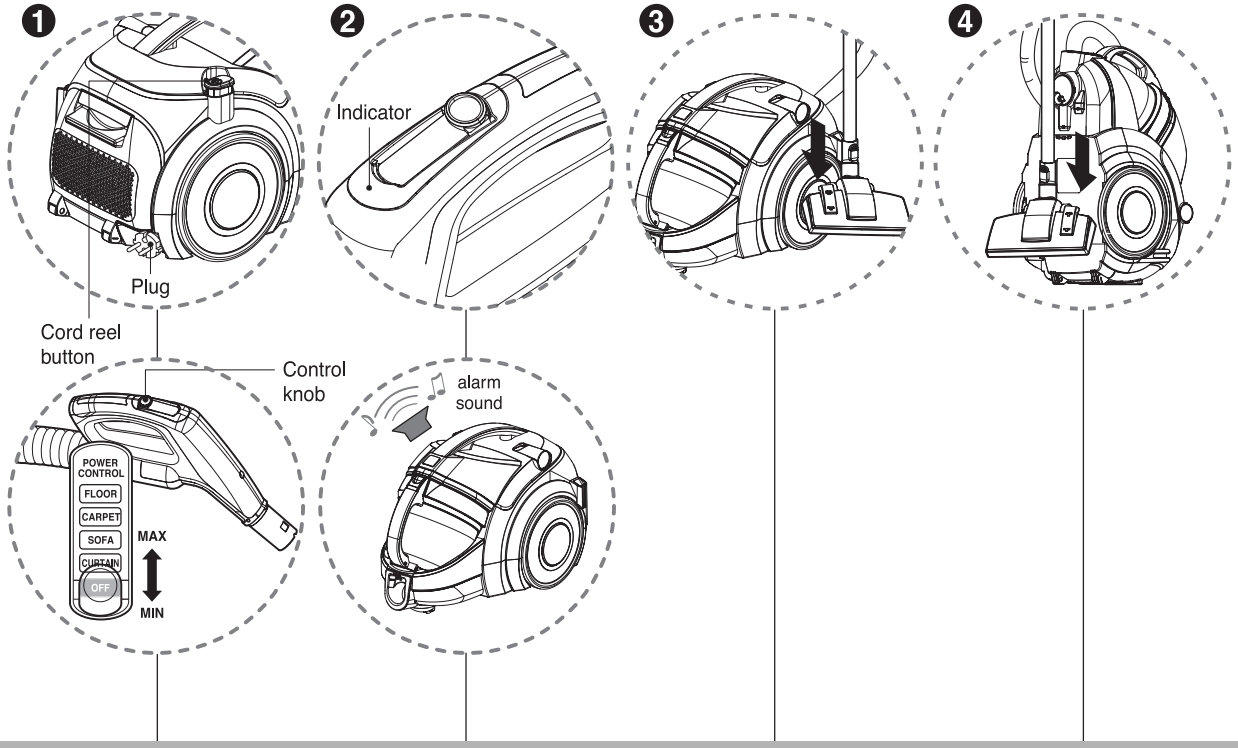

❶ How to operate

- Pull out the power cord to the desired length and plug into the socket.
- Place the control knob of the hose handle to the required position.
- To turn off, slide control knob to OFF position.
- Press the cord reel button to rewind the power cord after use.

❷ Indicator and alarm sound

- The indicator light of the hose handle is on and alarm will sound when dust tank is full. After about 1 min 30 sec, vacuum cleaner will turn itself off and alarm will sound. Empty the dust tank and reuse the vacuum cleaner

❸ Park mode

- To store during vacuuming, for example to move a small piece of furniture or a rug, use park mode to support the flexible hose and nozzle.
  - Slide the hook on the nozzle into the slot on the side of vacuum cleaner.

❹ Storage

- When you have switched off and unplugged the vacuum cleaner, press the cord reel button to automatically rewind the cord.
- You can store your vacuum cleaner in a vertical position by sliding the hook on the nozzle into the slot on the underside of the vacuum cleaner.

NOTICE

When indicator light flashes and alarm sounds :

1. Dust tank is full
   ➡ slide handle knob to OFF position and empty dust tank
2. Power is on without dust tank
   ➡ slide handle knob to OFF position and reattach dust tank
3. Rotating plate in the dust tank is restricted because of obstruction
   ➡ slide handle knob to OFF position and remove obstruction

How to Use Using carpet and floor nozzle

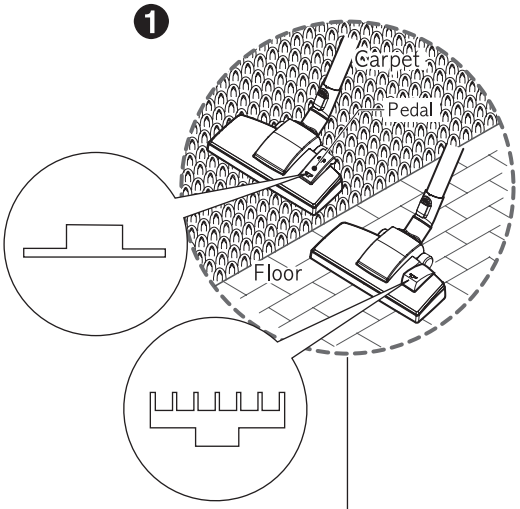

❶ Carpet and floor nozzle (depend on model)

- **The 2 position nozzle**
  This is equipped with a pedal which allows you to alter its position according to the type of floor to be cleaned.
- **Carpet or rug position**
  press the pedal (⎍) to lower brush.
- **Hard floor position** (tiles, parquets floor)
  Press the pedal (⎍) Press the pedal to lift the brush up.

- **Cleaning carper and floor nozzle**

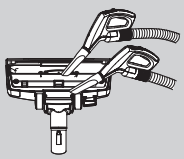

- Clean the hole and brush of the nozzle.

How to Use Using all floor nozzle and mini turbine nozzle

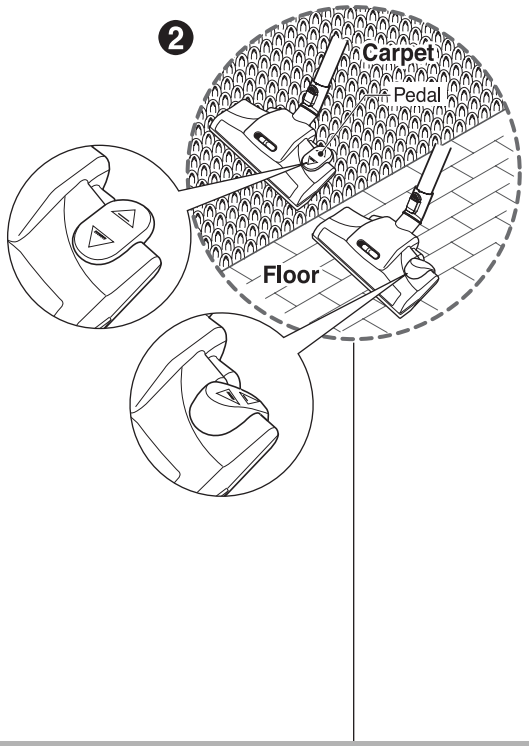

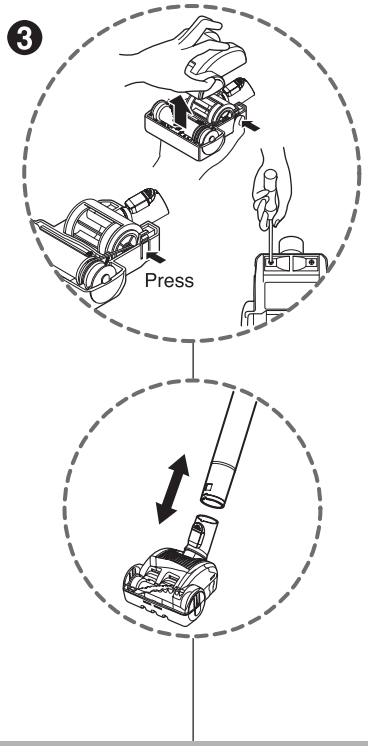

❷ All floor nozzle (depend on model)

- **The 2 position nozzle**
  This is equipped with a pedal which allows you to alter its position according to the type of floor to be cleaned.
- **Carpet or rug position**
  Press the pedal (⧋), then brush is will rotate
- **Hard floor position**
  Press the pedal (⧋) , then brush will stop rotating

• Cleaning all floor nozzle

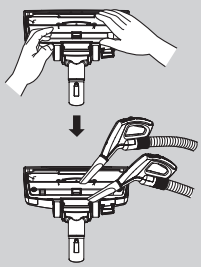

• Open the cover by pulling the hook.

• Clean the hole and brush of the nozzle.

❸ Mini turbine nozzle (depend on model)

- Mini turbine is used for stairs and other hard to reach places.
- To clean the mini turbine nozzle, remove the nozzle cover :
  Remove 2 screws on the bottom and take mini turbine nozzle cover off as shown.
- Frequently clean and remove hair, string, and lint build-up in the brush area. Failure to do so could damage to mini turbine nozzle.

How to Use Using accessory nozzles

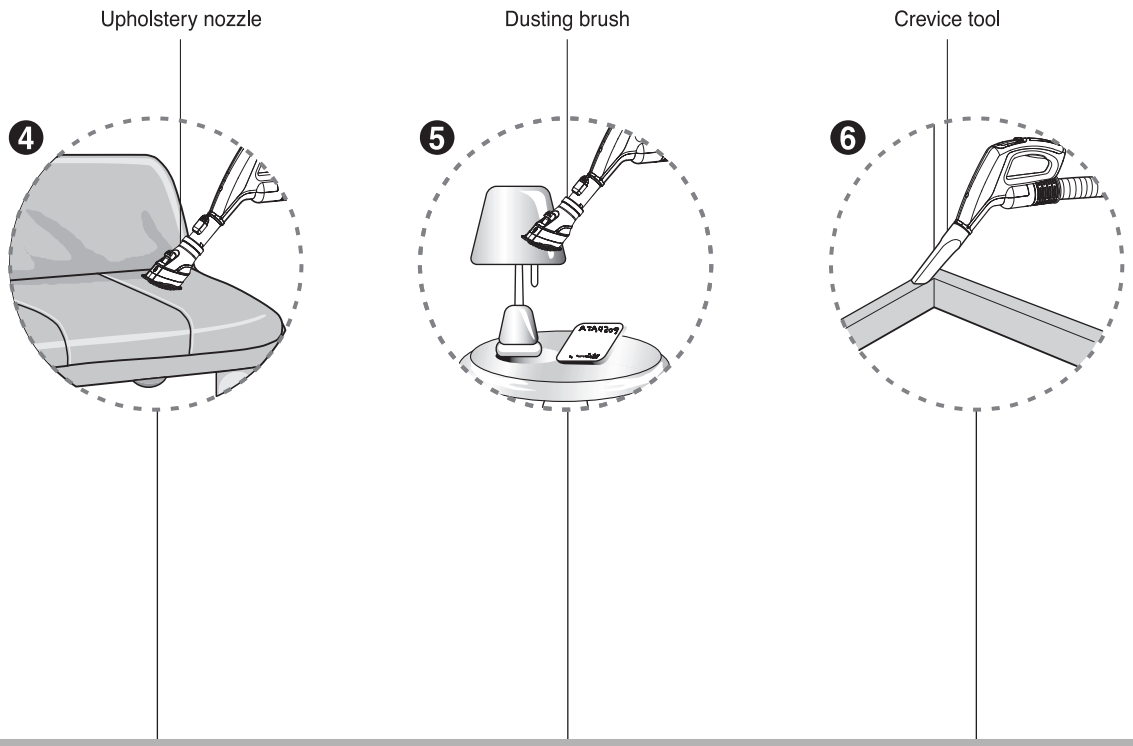

❹ Upholstery nozzle

Upholstery nozzle is for vacuuming upholstery, mattresses etc.

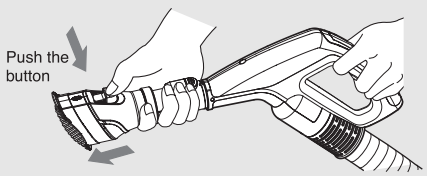

〈Upholstery nozzle mode〉

❺ Dusting brush

Dusting brush is for vacuuming picture frames, furniture frames, books and other irregular surfaces.

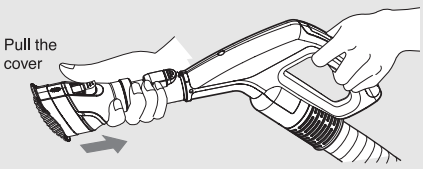

〈Dusting brush mode〉

❻ Crevice tool

Crevice tool is for vacuuming in those normally hard-to-reach places such as reaching cobwebs or between the cushions of a sofa.

NOTICE

Use accessory in the sofa mode



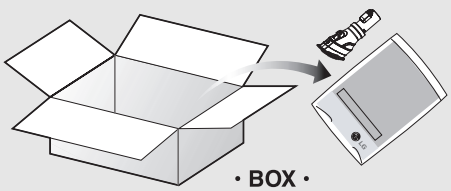

• BOX •

• Accessory nozzles included in the "BOX" with owner's manual.

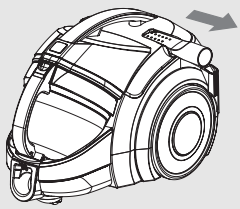

• Crevice tool included in the vacuum cleaner body.

How to Use Using the sani punch nozzle

Features

This nozzle picks up even dust inside through beating.
The bottom part can be separated to be cleaned.
Since the bottom does not stick to the surface, vacuuming is easy.

How to use

Follow the directions below for proper use.

Assembly

Connect the nozzle to the telescopic tube.

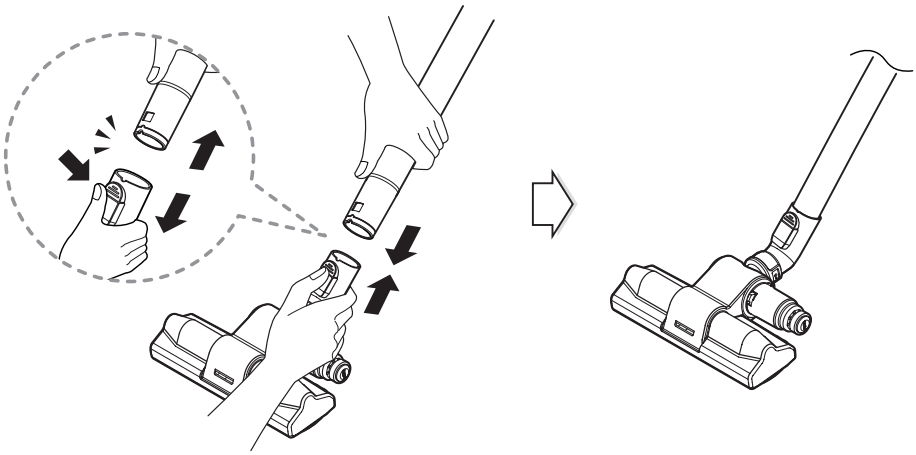

Sani punch nozzle (depending on model)

Set the suction power control switch to MAX POWER before vacuuming.
Depending on the type of bedding, handling may be awkward or it may cause a lot of noise.
If this is the case, adjust the suction power control switch to a lower setting.

This Sani Punch nozzle is for effective cleaning of beds and blankets to remove mites and dust.

Effective cleaning

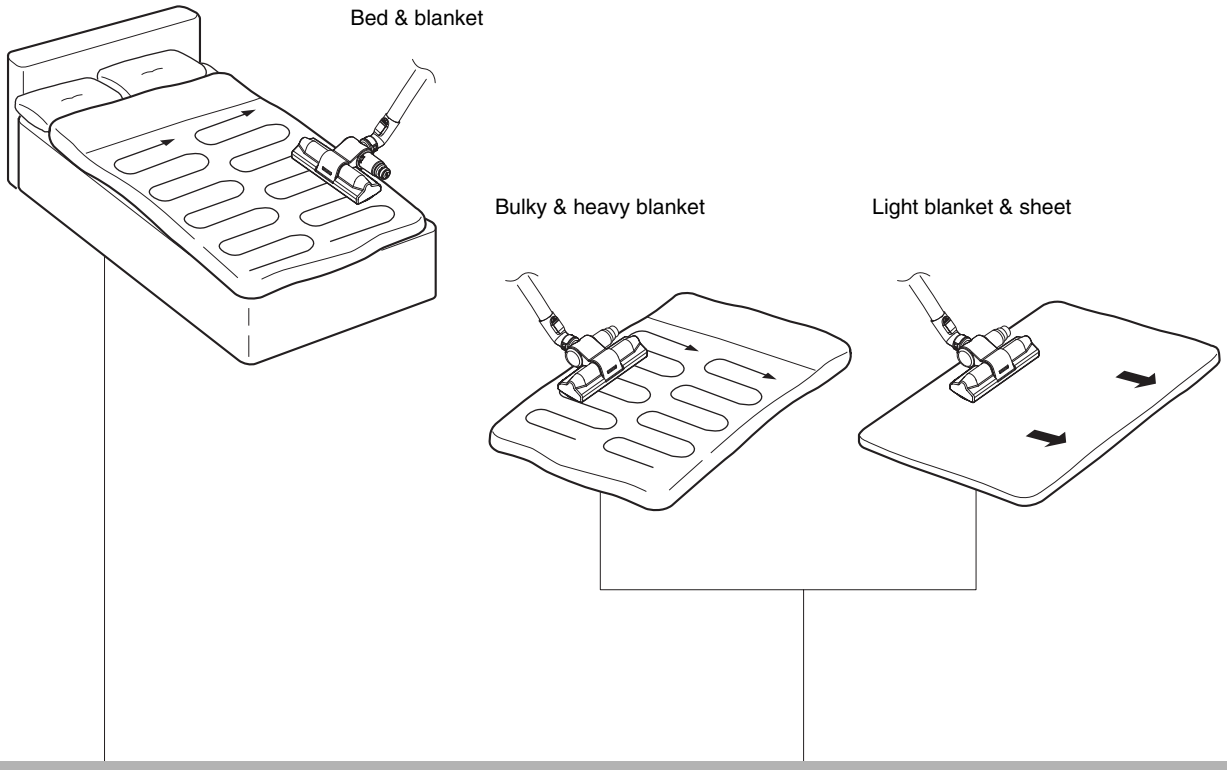

When using on the bed

Lay out the blanket and vacuum it on the bed

When using on the floor

It is easier to clean a light blanket or sheet
by pushing the nozzle in the direction of the arrow.
To increase cleaning efficiency for light blankets,
lay on top of a bulky blanket and then clean.

For simple cleaning of the vacuum nozzle, detach the Sani Punch nozzle from the telescopic tube and attach the crevice tool to vacuum dust.

Top

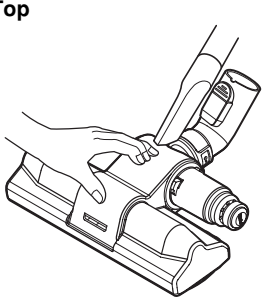

Bottom

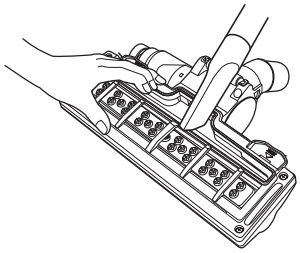

Since the vibrator inside is composed of precision parts, never disassemble the body.
Be careful not to let foreign objects clog the air suction part on top of the vacuum nozzle.
Since removal of the punch bar may cause performance problems, do not warp or remove it.
Attach the bottom plate properly before using. Without this bottom plate, it may not function.

Since this vacuum nozzle has been made exclusively for cleaning beds, blankets and upholstery, use it only for these cleaning purposes.
(Using it to clean the floor may result soiling it or a drop in performance, do not use it for such purposes.)

Follow the instruction below for through washing.
(Do not soak the entire body of the vacuum nozzle in water, it may cause the vibrator to malfunction)

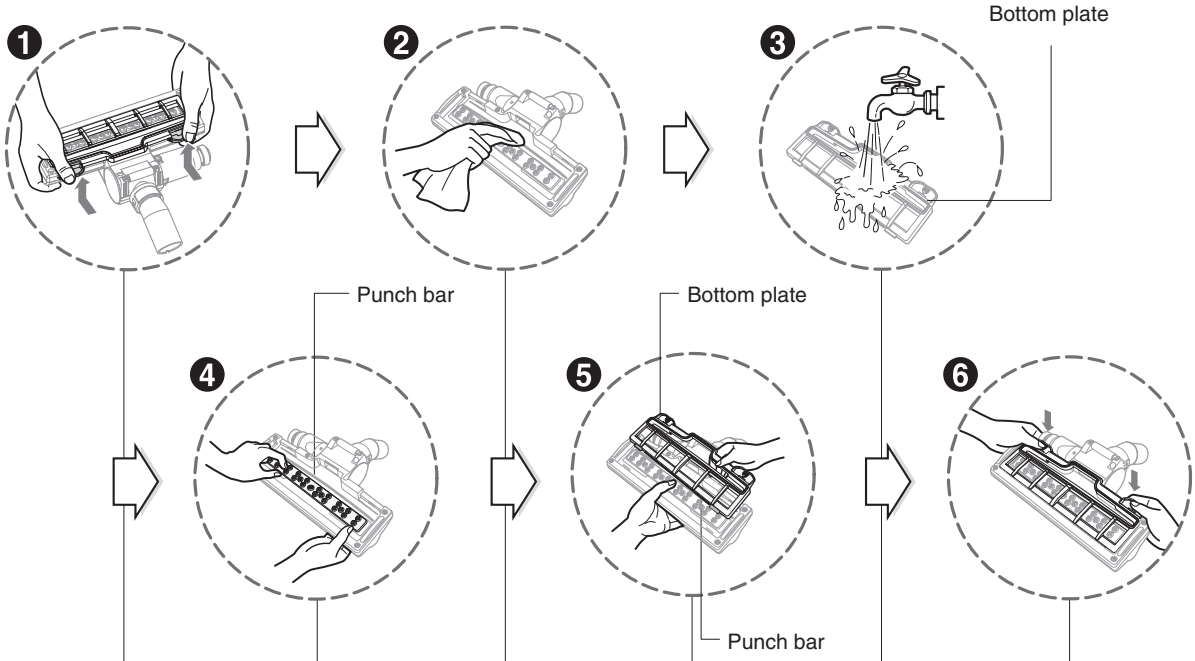

❶ Press the button on the rear side of the vacuum nozzle to separate the bottom plate.

❷ Wipe all the soiled parts of the vacuum nozzle body with a cloth.

❸ Wash the removed bot-tom plate with water and dry it.

❹ Straighten the punch bar on the lower section.

❺ Insert the attachment projections on bottom plate to the vacuum nozzle grooves.

❻ Push down the tabs to secure.

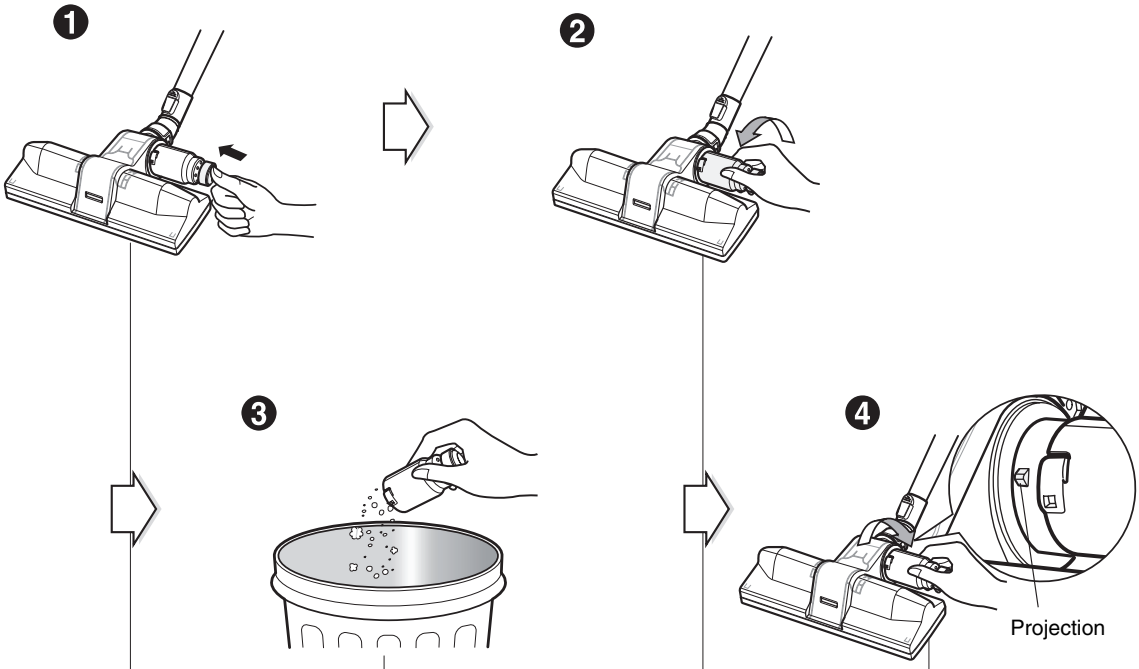

❶ Push the button 2-3 times when the dust is filled in the dustbin while cleaning

❷ When the dust is fully filled after cleaning, take the bin and turn it counterclockwise to disconnect

❸ Waste the dust in the bin

❹ Take the bin to fix into the projection part and then turn it clockwise to connect.

How to Use Emptying dust tank

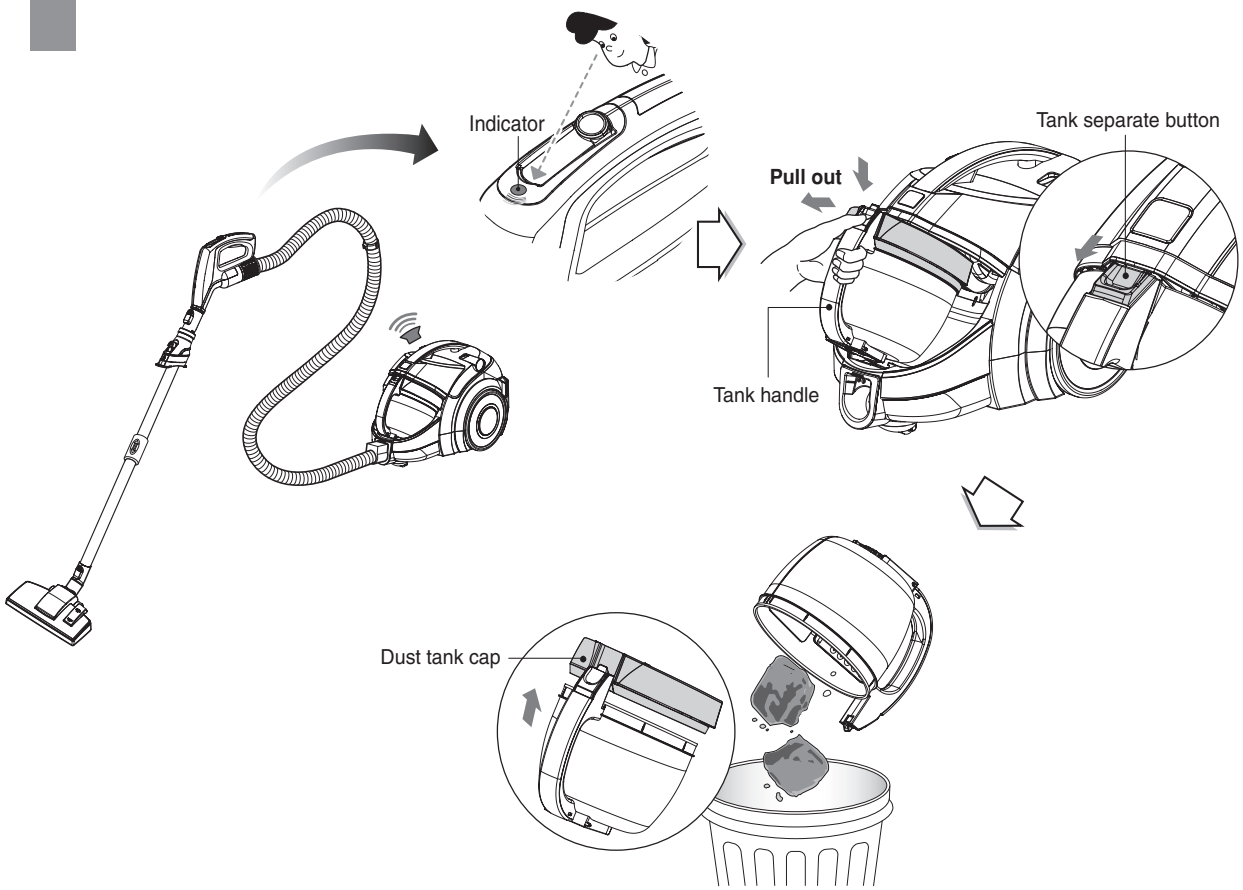

The dust tank needs emptying when indicator light is on.
- Turn off the vacuum cleaner and unplug it.
- Grasp the handle of the tank and then press the tank separation button.
- Pull out the dust tank.
- Empty the tank and then assemble the dust tank as shown.

Assembling dust tank

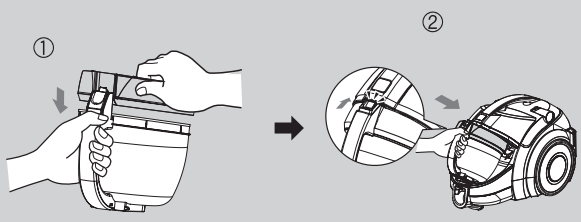

NOTICE

- If suction power decreases after empting dust tank, clean dust tank ➔ next page
- **Since dust tank is full, indicator continues to flash for 1 min 30 sec and suction power will decrease for a while, then vacuum cleaner will turn itself off.**

Moving the vacuum cleaner

- Don't grasp the tank handle when you are moving the vacuum cleaner. The vacuum cleaner's body may fall when separating tank and body. You should grasp the carrier handle when you are moving the vacuum cleaner.

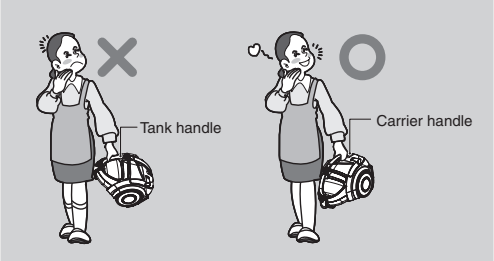

How to Use Cleaning dust tank

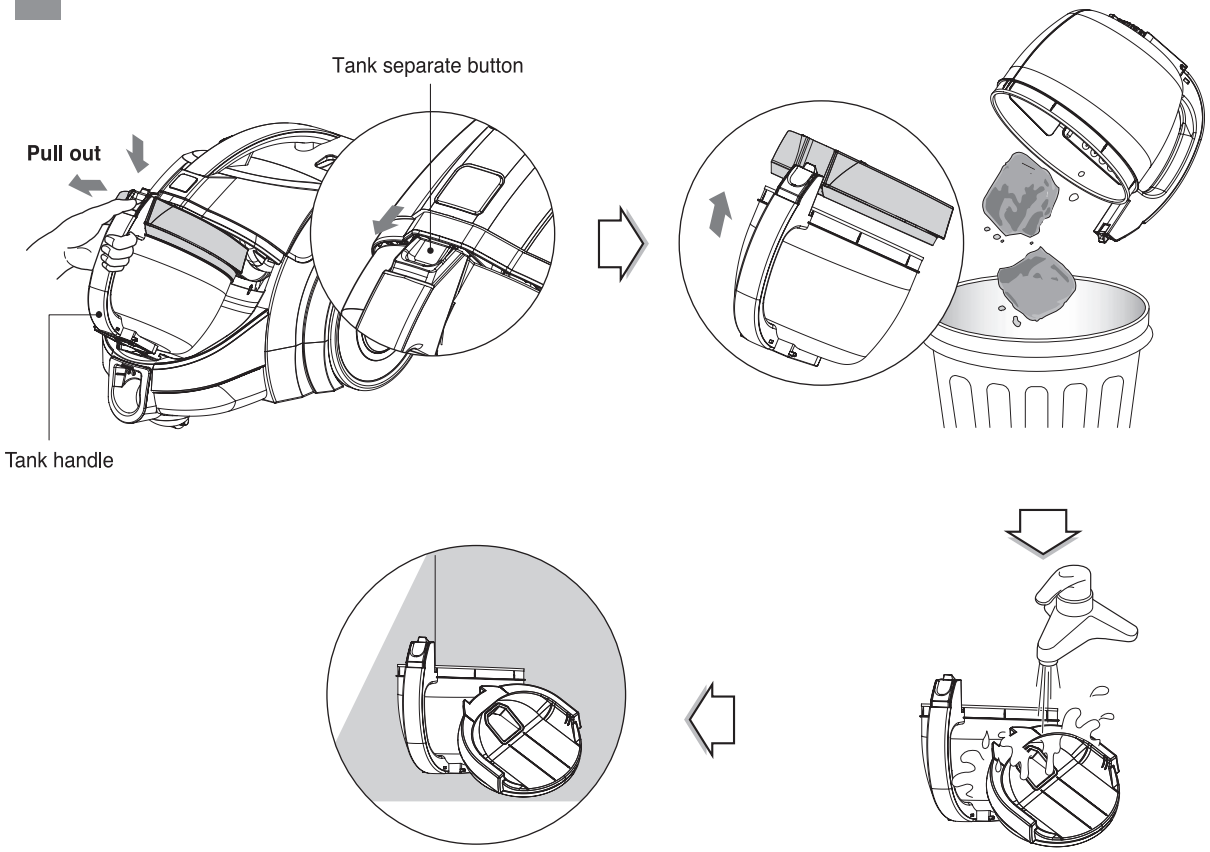

- Press tank separation button and pull out dust tank.
- Raise dust tank cap.
- Empty the dust tank and wash it.
- Dry fully in shade so that moisture is entirely removed.

NOTICE

If suction power decreases after cleaning dust tank, clean air filter and motor safety filter. ➔ Next page

How to Use **Dust separator clean alarm display**

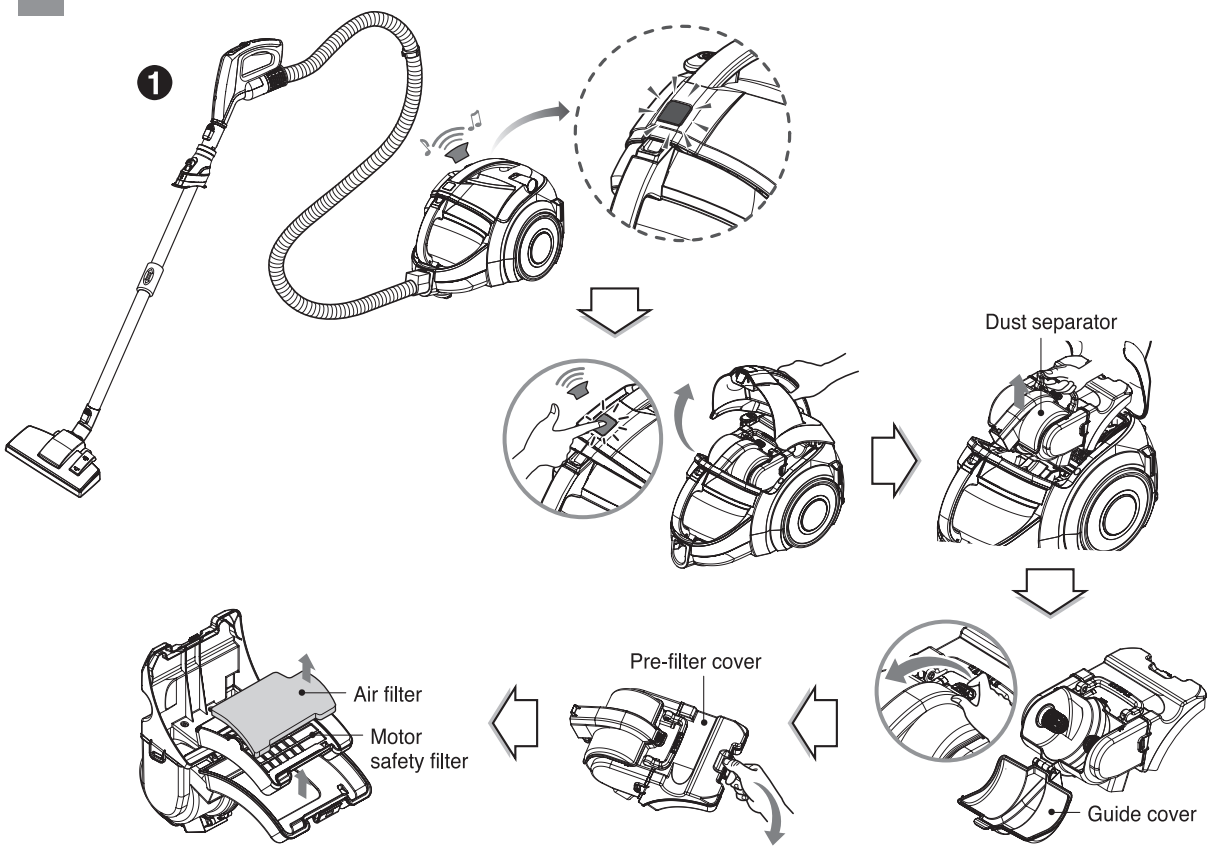

❶ How to separate

- When the LED on the main unit is turned on, please clean the dust separator.
- When LED on the main unit will be turned on in blue for 1 minute and the buzzer will go off “Ting Ting” on the main unit of the cleaner.
  The suction power will dramatically be reduced in 30 seconds and the cleaner will automatically be stopped.
- Open the Vacuum cleaner cover by pushing the button.
  Grasp the handle of the dust separator and take it out.
  Open the guide cover by pulling the guide cover lever and remove dust.
  Open the pre filter cover by pulling the pre filter cover lever and take out pre filter assembly.

How to Use Cleaning air filter and motor safety filter

❷



❸

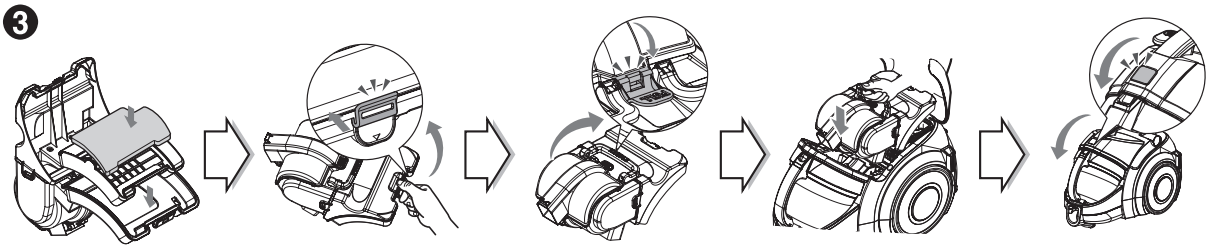

❷ How to clean

If suction power is decreased after cleaning dust tank or indicator light is on, clean air filter and motor safety filter. Air filter and motor safety filter are located at the up of vacuum cleaner in the above figure.

- Wash air filter and motor safety filter with water.
- Do not wash filters with hot water.
- Dry fully in shade so that moisture is entirely removed.
- Air filter and motor safety filter should be cleaned in the above case.
- Do not use filters that is not dried.

NOTICE

If filters are damaged, do not use them.
In this cases, contact LG Electronics Service Agent.
Wash filters at least every 3 months.

❸ How to assemble

- Insert the motor protection filter to the filter case.
- Close the filter cover.
- Close the dust separator cover.
- Hold the handle of the dust separator to firmly assemble it by pressing it down.
- Close the cleaner cover.

⚠ CAUTION

Assemble in the reverse order as disassembling.
If you use the cleaner without the motor protection filter and filter case, the LED on the main unit will be turned on with the “Ting Ting” sound to disable the operation.
You must install the motor protection filter and filter case before using the cleaner.

How to Use Cleaning exhaust filter

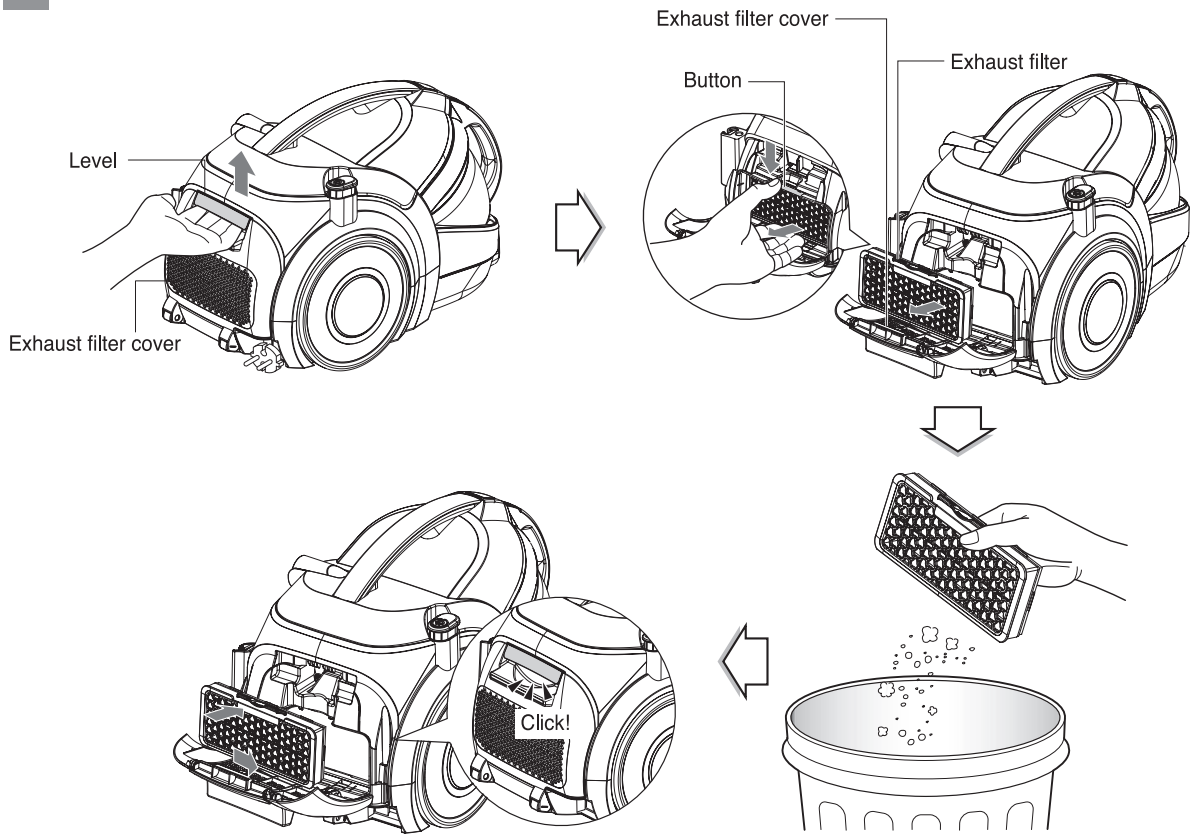

- The exhaust filter is a reuseable.
- To clean the exhaust filter, remove the Exhaust filter cover on the body by pulling out it.
- Separate the exhaust filter.
- Dust off filter.(Do not wash filter with water.)
- The exhaust filter should be cleaned at least a year.

Exhaust filter cover assembling

- Fit exhaust filter cover lugs to the grooves of vacuum cleaner body.
- Join it the body.

How to Use Check before requesting for service

You should not waste money by requesting for service only to find out that it's not a problem.
If you experience any issues with the product, check the following details before contacting the service center or the distributor. You may be able to resolve the issue by a simple instruction from the user manual.

❶

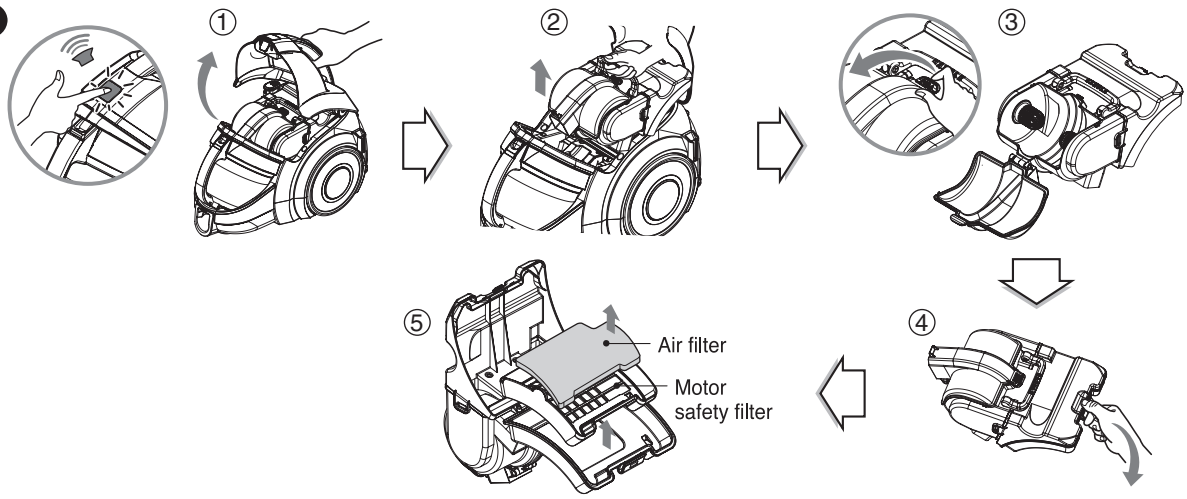

❷



Suddenly, the suction does not work. → • Stage 1 : Check whether the suction control button is set to “High”
• Stage 2 : Clean the dust separator.

❶ How to separate

① Press the cleaner cover button, and open the cover of the main unit.
② Hold the handle of the dust separator and pull it up.
③ Open the dust separator cover to remove the dust.
④ Open the filter cover.
⑤ Pull out the filter case and motor protection filter.

❷ How to clean(Clean with cold water.)

① Clean well in flowing water.
② Remove the moisture thoroughly.
③ Completely dry it under the shade where it is well ventilated before reusing it.

How to Use Check before requesting for service

You should not waste money by requesting for service only to find out that it's not a problem.
If you experience any issues with the product, check the following details before contacting the service center or the distributor. You may be able to resolve the issue by a simple instruction from the user manual.

❶

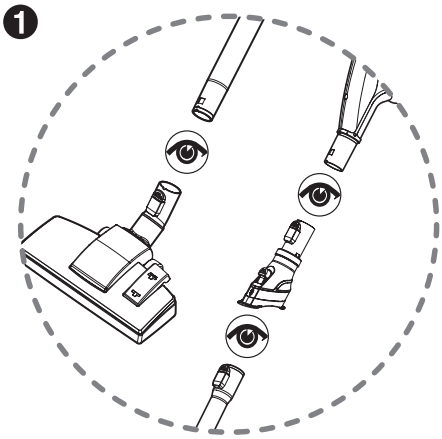

❷

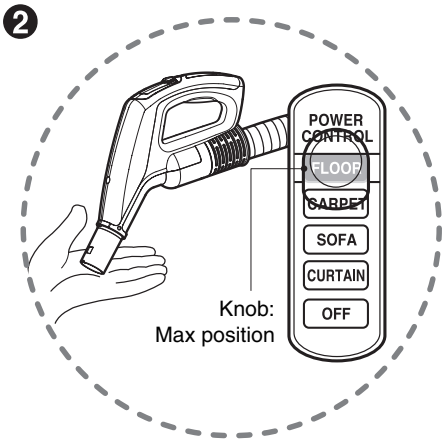

Suddenly, the suction is poor and noise is louder than usal.

❶ Stage 1: Check the nozzle, pipe connection

① Check nozzle and pipe inside whether blocked or not
② If blocked, remove obstruction [See page 10]
③ Check pipe and hose inside whether blocked or not
④ If blocked, refer to the stage 2.

❷ Stage 2: Check the hose inside

① Set control knob to “FLOOR”(Max position)
② Check the hose by opening and closing the hose inlet repeatedly.
③ After ② 3 ~ 4 times, the problem will be solved.

Trouble Shooting

Review this chart to find do-it-yourself solutions for minor performance problems.
Any service or repair needed, other than as described in this User's Guide, should be performed through your local LGE service center.

⚠ WARNING

Electrical shock and personal injury hazard.
Always unplug the vacuum cleaner before servicing. Failure to do so could result in electrical shock or personal injury.

PROBLEM	POSSIBLE CAUSE	POSSIBLE SOLUTION
Vacuum cleaner will not run	• Unplugged at wall outlet • Hose is not connected to the body properly • Full or clogged dust tank and filters • Dust tank improperly installed • Clogged hose or wand • Clogged nozzle	• Make sure cord is plugged into a functioning outlet. • Remove the hose from the body and reconnect it properly. [See page 7] • Empty dust tank and clean filters. [See page 17 ~ 20] • Make sure all dust tank components and filters are installed correctly. • Check for clogs. [See page 23]
Poor suction	• Full or clogged dust tank and filters • Dust tank improperly installed • Clogged hose or wand • Clogged nozzle	• Empty dust tank and clean filters. [See page 17 ~ 20] • Make sure all dust tank components and filters are installed correctly. • Check for clogs. [See page 23]
Switch on, but hose LED is on and alarm sound "Dding~, Dding~" 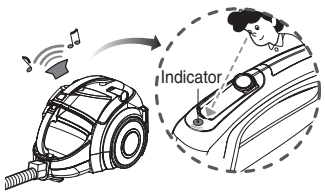	• Dust tank is full • Power is on without dust tank • Rotating plate in the dust tank is restricted because of obstruction	• Empty dust tank 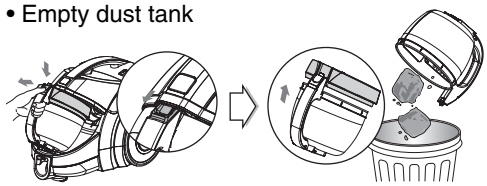 • Reattach dust tank • Remove obstruction[See page 17 ~ 18]
Switch on, but unit LED is on and alarm sound "Dding Dding~, Dding Dding~" 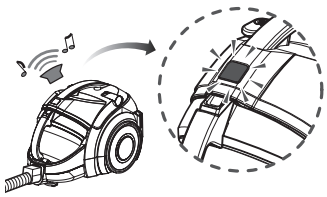	• Dust separator and filters is full of dust • Power is on without dust separator and filters	• Clean dust separator and filters 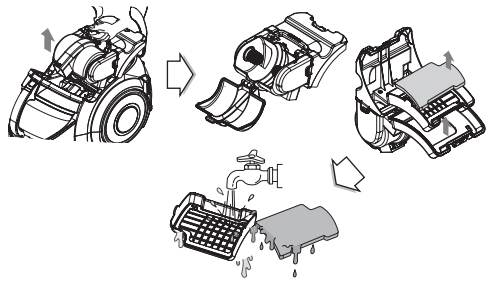 • Reattach dust separator and filters

Trouble Shooting

PROBLEM	POSSIBLE CAUSE	POSSIBLE SOLUTION
Is the noise louder than usual?	• Clogged hose or wand • Clogged nozzle	• Check for clogs. [See page 23]
Smell	• Smell as the motor spins fast around the surrounding rubber • The filters of dust separator with dust is old or stored for a long time	• It's the smells from new vacuum cleaner. The smell disappears after 1-2 months. It's like the smells from a new car or furniture • Empty dust tank and clean filters. [See page 17 ~ 20]
Agitator does not turn	• Clogged nozzle • Pedal improperly positioned.	• Check for clogs. [See page 23] 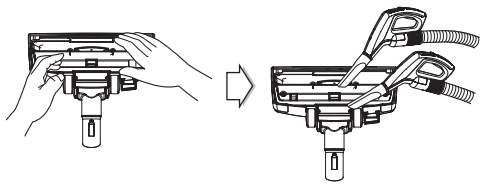 • Check the pedal position [See page 10]



Disposal of your old appliance

1. When this crossed-out wheeled bin symbol is attached to a product it means the product is covered by the European Directive 2002/96/EC.
2. All electrical and electronic products should be disposed of separately from the municipal waste stream via designated collection facilities appointed by the government or the local authorities.
3. The correct disposal of your old appliance will help prevent potential negative consequences for the environment and human health.
4. For more detailed information about disposal of your old appliance, please contact your city office, waste disposal service or the shop where you purchased the product.

Note



The LGE Customer Support Team can be contacted as follows :		
For all Consumer enquiries Line opening hours **Monday-Friday** 09:00 to 20:00, **Saturday** 09:00 to 18:00, **Sunday** 10:00 to 16:00,	**Phone**	**0844 847 LGLG(5454)** (National Call Rate)
	E-mail	**www.lgelectronics.co.uk,** then select "CONTACT US"
	Fax	**0844 847 1413**

Made in Korea