Model	VKC402HTW		
Language	영어	Part No.	3828FI2873N
Page	16	인쇄도수(외/내)	2/2
재 질	모조지 100g	크 기(D*W)	260 * 190
작성일자	200.08.04	담 당 자	강 혜 근

OWNER'S MANUAL

VKC402HTW



New Type Cyclone vacuum cleaner

3828Fi2873N

Table of contents

Information for Your Safety.....3

How to Use.....4

Assembling Cleaner 4

Using the Cleaning head and Accessory Nozzles.....6

Cleaning the Carpet master and Hard Floor Nozzle.....8

Emptying the Dust Tank 9

Vacuum Cleaner Operation 10

Cleaning the Dust Tank.....11~12

Cleaning the Air Filter.....13

Cleaning the Exhaust Filter 14

What to do if your Vacuum Cleaner does not work.....15

What to do when suction performance decreases 15

Information for Your Safety

Please read all the following information, which contains important instructions for the safety, the use and the maintenance of the appliance.
This appliance complies with the following EC Directives:
-73/23/EEC, 93/68/EEC-Low Voltage Directive-89/336EEC -EMC Directive.

❏ Never allow children to use the appliance unsupervised.
❏ Do not use the vacuum as a toy, injury could result.
❏ Do not continue to vacuum if any defect appears, missing or damaged.
In these cases, contact an approved LG Electronics Service Agent.
❏ Repairs, when necessary, must be performed at an approved LG Electronics Service Agent.
❏ Only use parts produced or recommended by LG doing otherwise could invalidate your guarantee.
❏ Do not use without the dust tank or air filter.
❏ Do not use the vacuum cleaner If the power cord is damaged or faulty.
❏ If the power cord is damaged, it must be replaced by an approved LG Electronics Service Agent to avoid a hazard.
❏ Do not unplug by pulling on cord.
❏ Do not pull on the supply cord, run over it, pull it around sharp edges or near/over hot surfaces.
❏ Always turn the vacuum cleaner off before:
- Emptying the dust tank.
- Cleaning or changing the filter.
- Romoving from the mains outlet.

❏ Do not leave vacuum cleaner with the plug connected to a mains outlet-unplug when not in use.
❏ Do not use the vacuum with any of the openings blocked with any object that may restrict the airflow.
❏ Do not put any part of the body, colthes or any object (e.g. stick) into the opening or moving parts of the cleaner.
❏ Do not use outdoors.
❏ Do not vacuum hot ash, embers etc. or sharp objects.
❏ Do not vacuum flammable or explosive substances(liquids or gases).
❏ Do not vacuum water or other liquids.
❏ Do not handle the cleaner or plug with wet hands.
❏ Do not immerse the whole cleaner in water.
❏ Do not use vacuum cleaner without repaired if it was under water.
❏ When you vacuum with an attachment appliance that has a rotating brush roller:
- Do not reach into the running brush roller.

❏ The appliance is not intended for use by young children or infirm persons without supervision.
- Young children should be supervised to ensure that they do not play with the appliance.

❏ Do not vacuum fine dust.
❏ Do not expose vacuum cleaner to heat.

Thermal protector:
This vacuum cleaner has a special thermostat that protects the cleaner in case of motor overheating.
If the cleaner suddenly shuts off, turn off the switch and unplug the cleaner.
Check the cleaner for a possible source of overheating such as a full dust tank, a blocked hose or clogged filter.
If these conditions are found, fix them and wait at least 30 minutes before attempting to use the cleaner.
After the 30 minutes period, plug the cleaner back in and turn on the switch.
If the cleaner still does not run, contact a qualified electrician.

Important for users in the UK.
The wires in the mains lead of this appliance are coloured in accordance with the following code:

BLUE-neutral **BROWN - live**

VERY IMPORTANT:
Neither wire is to be connected to the earth terminal of a 3 pin plug. If a 13 amp plug is fitted, fit a 13 amp **BS 1362 fuse.**
If any other type of plug is used, protect with a 15 amp fuse at the distribution board.
For appliances which come with mains lead and plug moulded on: the plug moulded on to the cord incorporates a fuse.
For replacement use a 13 amp BS 1362 fuse. Only ASTA approved or certified fuses should be used.
The fuse cover/carrier must be replaced in the event of changing the fuse.
The plug must not be used if the fuse cover/carrier is lost.
A replacement cover carrier must be obtained from authorized electrical goods retailers.

How to Use Assembling Cleaner

Fit the large cleaning head onto the end of the pipe.

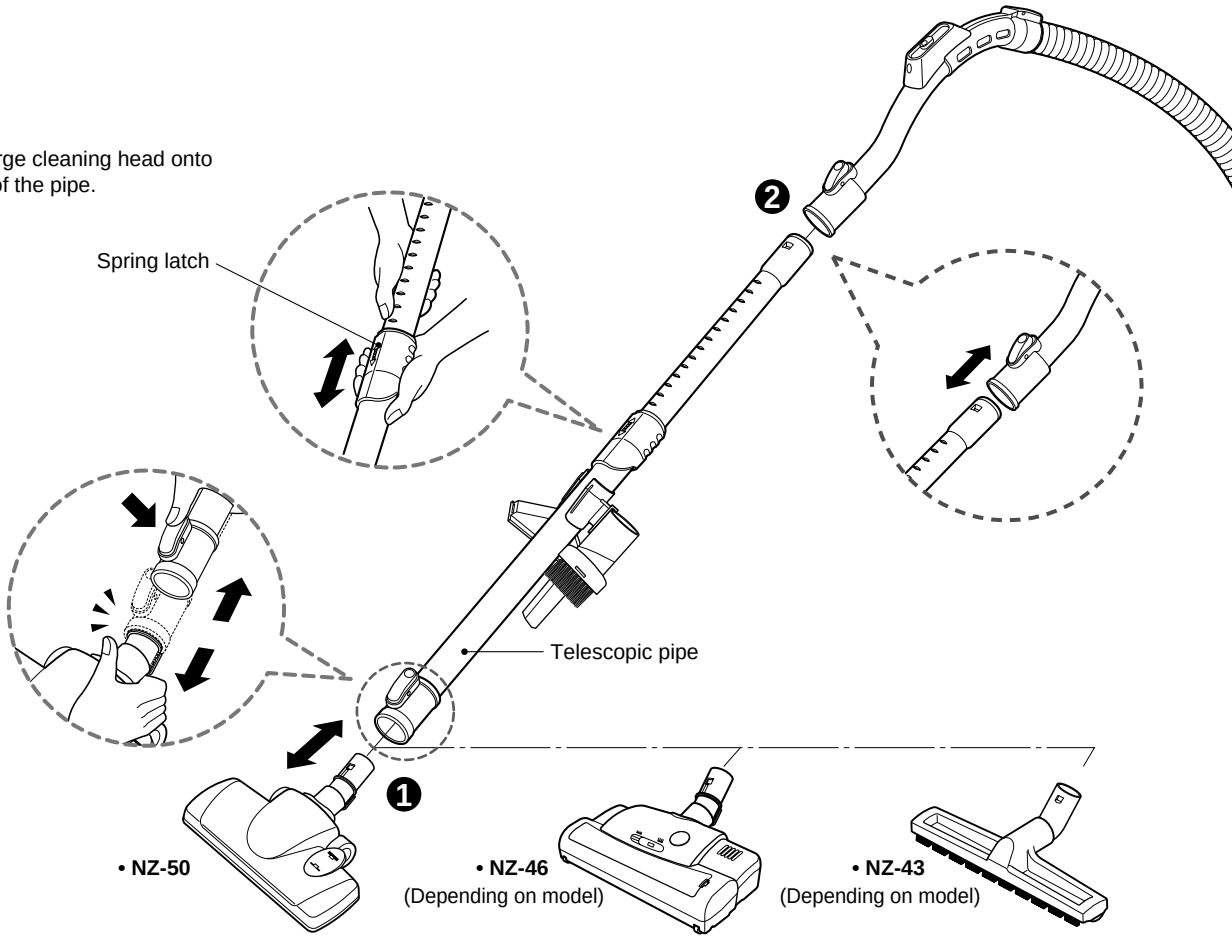

❶ Large cleaning head

Push the head onto the telescopic pipe.

❷ Telescopic pipe

- Press the spring latch to release.
- Pull out the pipe to the desired length.
- Release spring latch to lock the pipe in position.
- Push telescopic pipe into hose handle firmly.

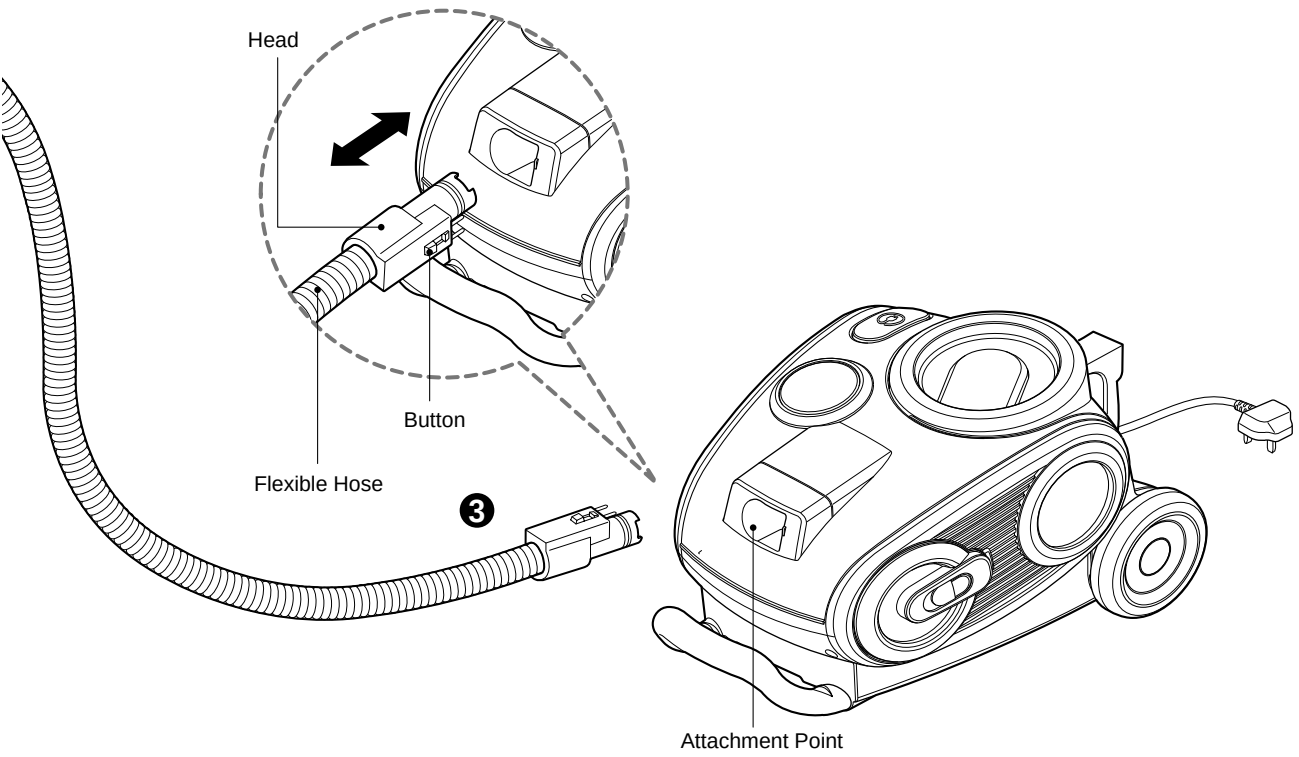

C K

❸ Connecting the hose to the cleaner

Push the head end of the flexible hose into the attachment point on the vacuum cleaner. To remove the flexible hose from the body, press on the button located on the head, then pull the head out of the vacuum cleaner.

How to Use Using the Cleaning head and Accessory Nozzles

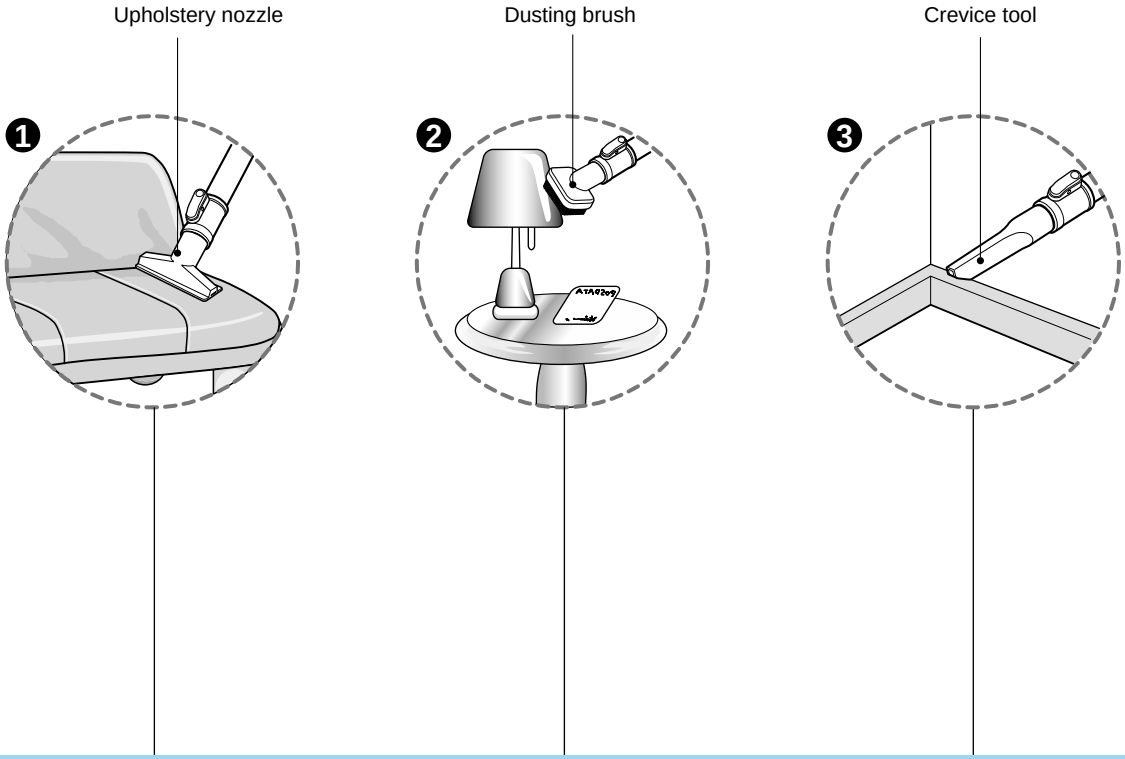

❶ Upholstery Nozzle

The Upholstery Nozzle is for vacuuming upholstery, mattresses, etc. The thread collectors will efficiently clean and collect the dust and fluff.

❷ Dusting Brush

The Dusting Brush is for using on picture frames, furniture, books or other uneven surfaces.

❸ Crevice Tool

The Crevice Tool will help you clean those hard-to-reach places as corners, cobwebs or between the cushions of your sofa.

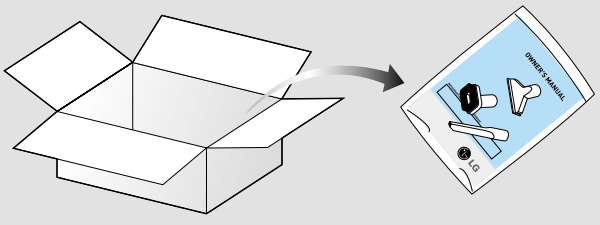

• BOX •

• **Accessory nozzles are included in a plastic bag together with owner's manual.**

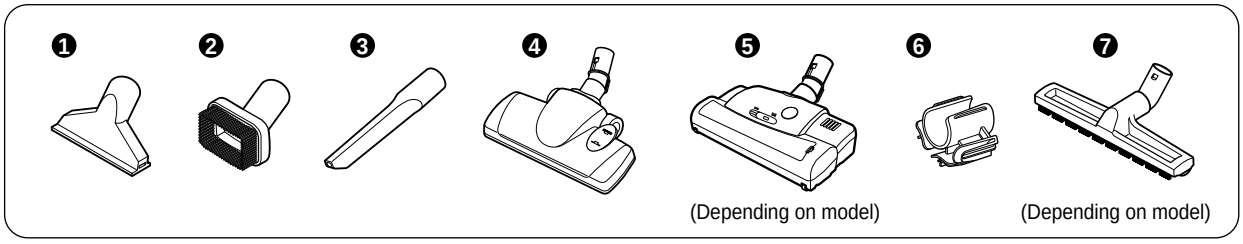

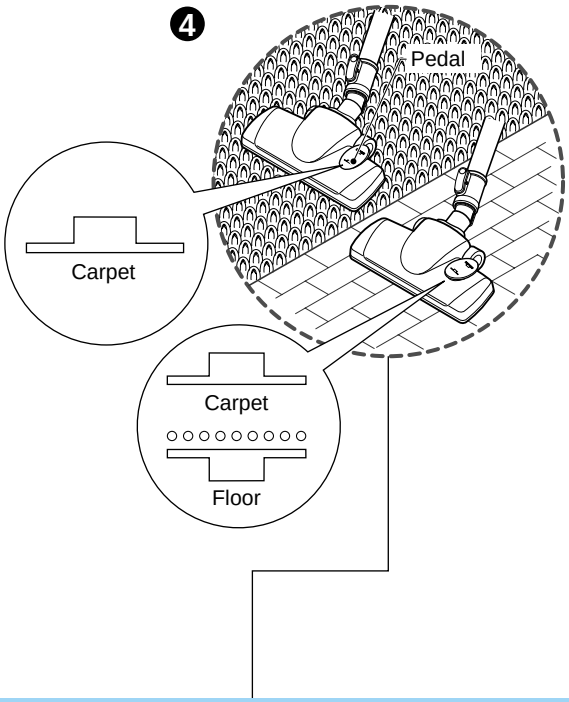

• Cleaning carpet and floor nozzle

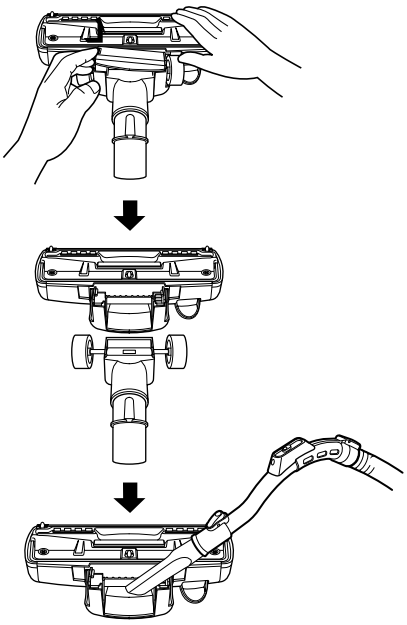

❹ Carpet and floor nozzle

- **Dual Cleaning Head** Equipped with a pedal that allows you to adjust its position according to the type of floor.
- **For carpets or rugs**
  Press the pedal to lower the brush.
- **For hard floors**
  (tiles, parquets or laminated floors)

- Open the cover by pulling the hook.
- Divide the nozzle into two parts
- Clean the hole of the nozzle.

How to Use Cleaning the Carpet master and Hard Floor Nozzle

❺

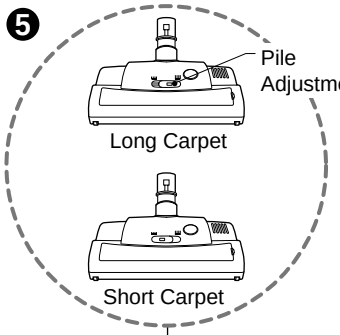

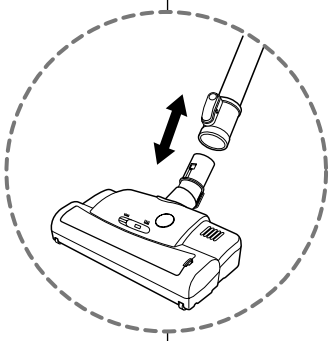

Cleaning Powerful Turbine Brush

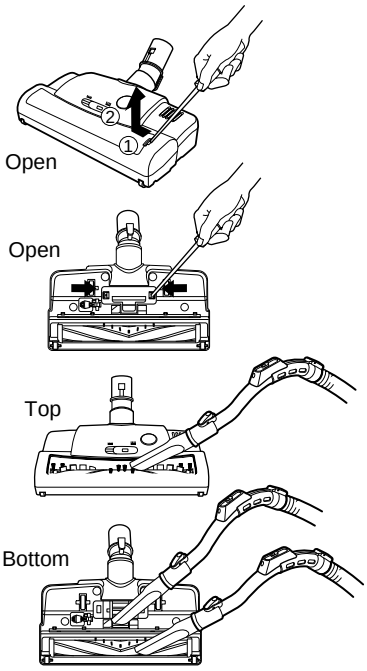

❼

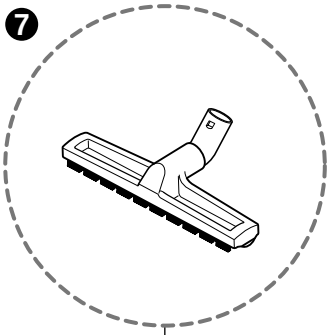

❺ Carpet master (Depending on model)

- Open the window by pulling the hook.
- Open the cover at the bottom by pulling the hook.
- Clean the brush.
- Clean the brush and hole at the bottom.
- Slide the Pile Adjustment to the right for long carpet and to the left for short carpet.

❼ Hard Floor Nozzle (Depending on model)

- Efficient cleaning of hard floors (wood, linoleum, etc)

How to Use Emptying the Dust Tank

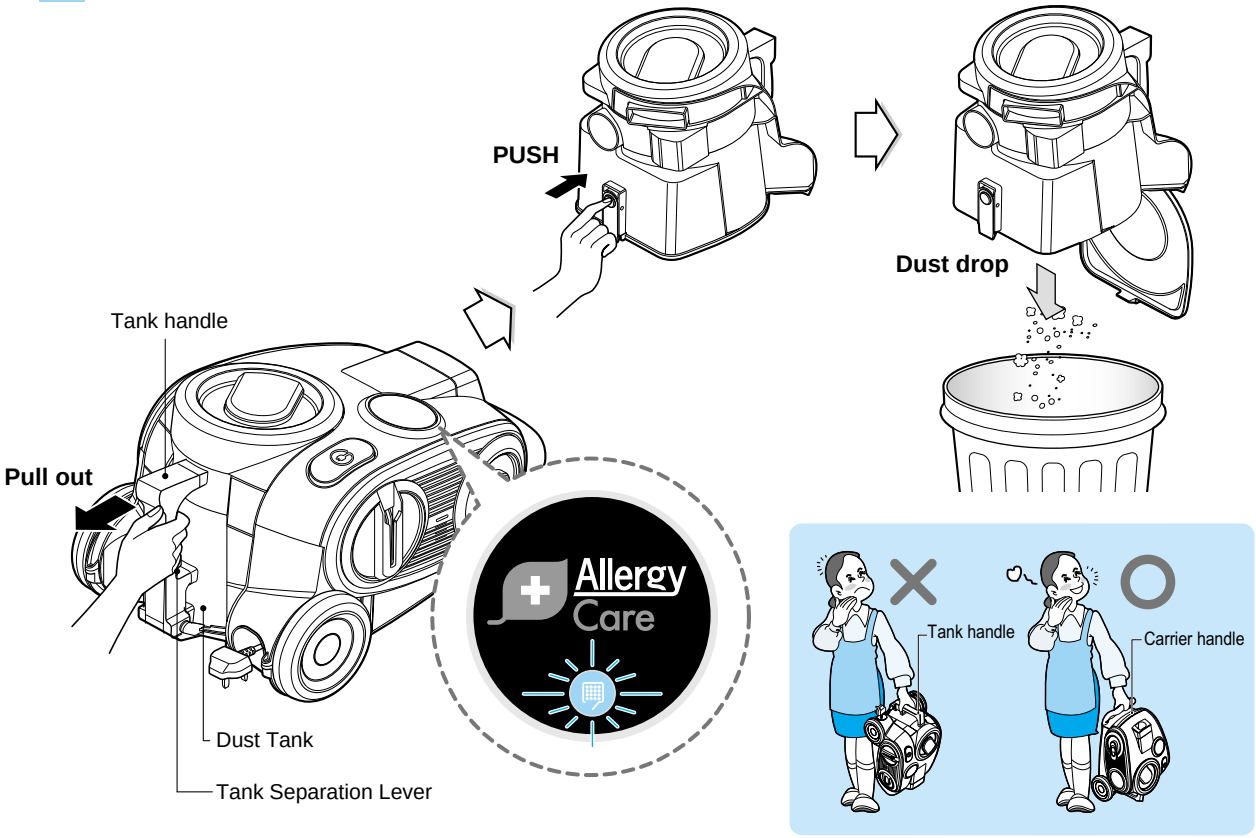

The dust tank needs emptying when LED is turned to red.

- Turn off the vacuum cleaner and unplug it.
- Grasp the handle of the tank and then push the tank separation lever.
- Pull out the tank.
- Empty the tank and then push the tank into the cleaner.
- Push the dust tank into the tank mount as far as it will go.

⚠ CAUTION

When suction power suddenly weakens, check the cleaner operates in Auto mode.

- Check the tank if suction power weakens when it is not in Auto mode. If dusts are full, empty the dust tank.
- If suction power is not improved still, clean the Air filter.

⚠ CAUTION

Don't grasp the tank handle when you are moving the Cleaner. The cleaner's body may be fell down with separating tank and body. You should grasp the carrier handle when you are moving the cleaner.

How to Use Vacuum Cleaner Operation

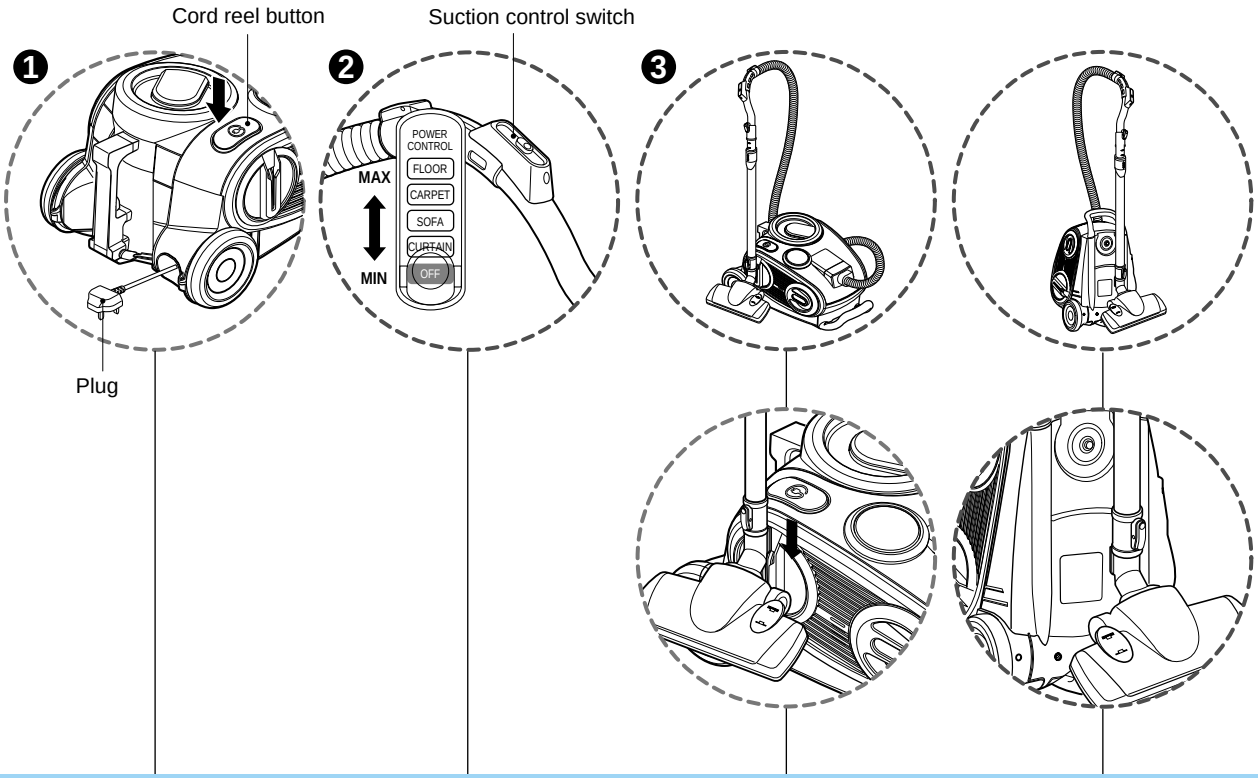

❶ How to Plug in and Use

- Pull out the power cord to the desired length and plug into the socket.
- Adjust cleaning status and operation of the cleaner at the control part of the grip handle.
- Press the OFF Button of the grip handle to stop.

❷ Adjusting the Suction power

- Adjust the suction level by using the handle slide control.

❸ Park System

- To store after vacuuming and pause while cleaning.
- For storage after vacuuming, for example to move a small piece of furniture or a rug, use the Park system to support the flexible hose and cleaning head.
  - Slide the hook on the large cleaning head into the slot on the side of the vacuum cleaner.

How to Use Cleaning the Dust Tank

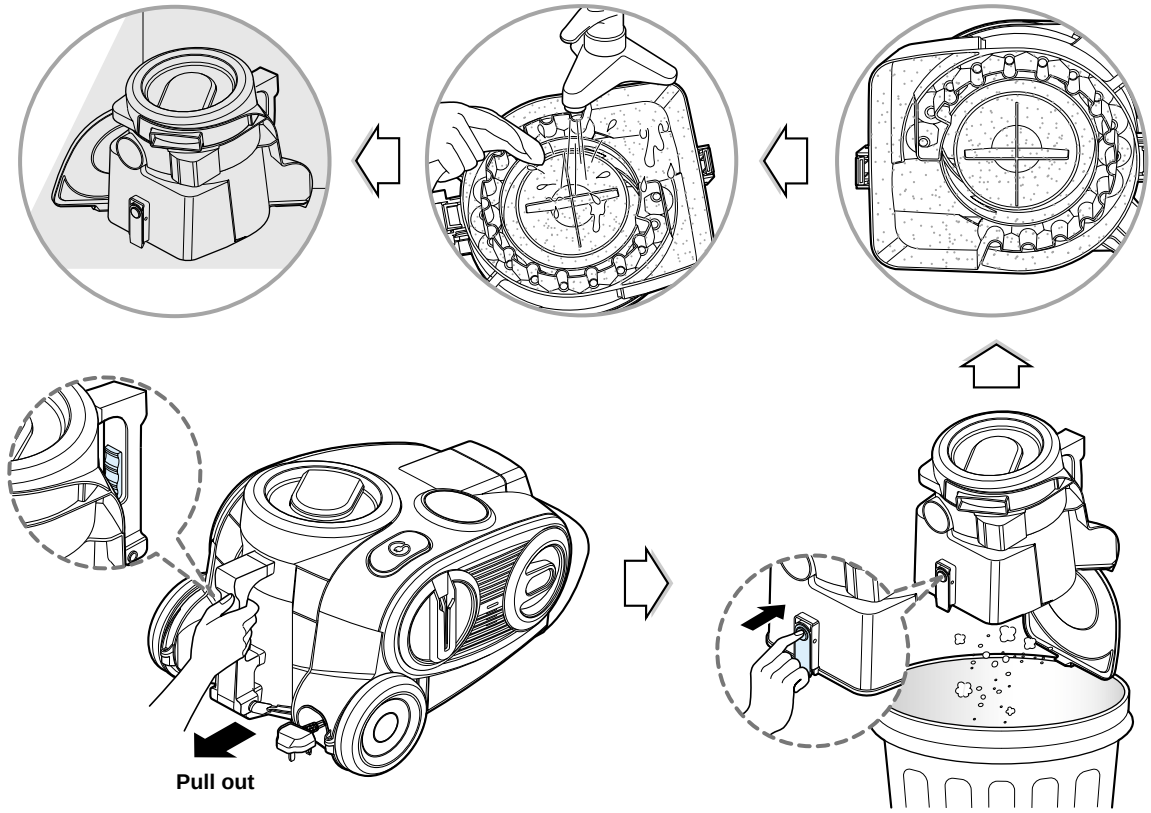

- Check the dust tank is full by the position indicated as “MAX” in the container.
- Press the lever of tank handle and pull the dust tank out.
- Empty dust by pressing the dust empty button as figure.
- Wash tank with water.
- Dry it in shade until the moisture is fully removed.

Air guide assembling

- Adjust the arrow of the air guide to the rib of the tank.
- Assemble the air guide by rotating it clockwise.

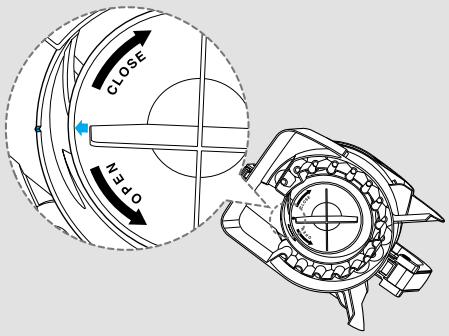

⚠ WARNING!

The cycle of the cleaning.

- Air filter
  - Every 6 months.
  - When the indicator light comes on.
- Exhaust filter
  - The exhaust filter should be cleand at least once a year.
- Dust Tank
  - When the dust tank is full by the position indicated as “MAX” in the container.

How to Use Cleaning the Dust Tank

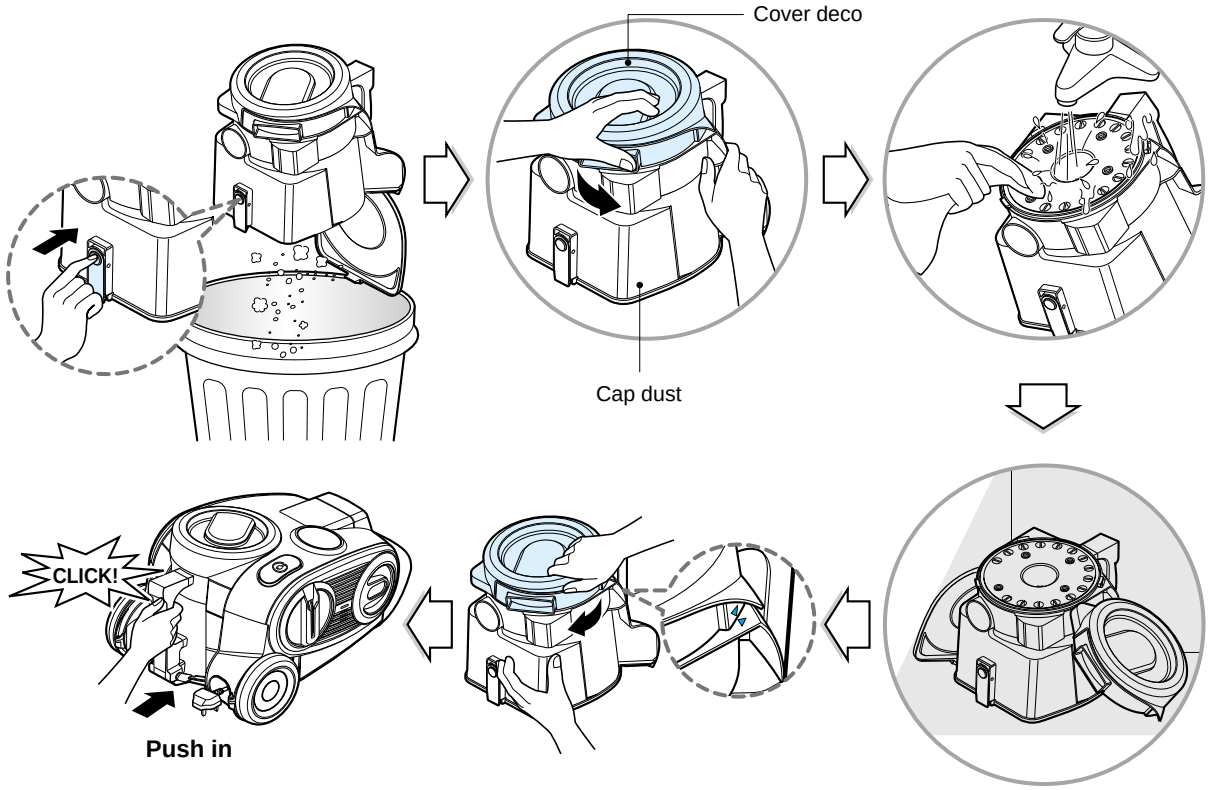

- Empty dust by pressing the dust empty button as figure.
- Remove the COVER DECO by rotating it counter-clockwise.
- Wash the dust tank.
- Dry it in shade until the moisture is fully removed.
- Adjust the arrow of the COVER DECO to the arrow of the CAP DUST.
- Assemble the COVER DECO by rotating it clockwise.
- When connecting the tank to the main body, push it until you hear 'clattering'.

How to Use Cleaning the Air Filter(Pre- Filter)

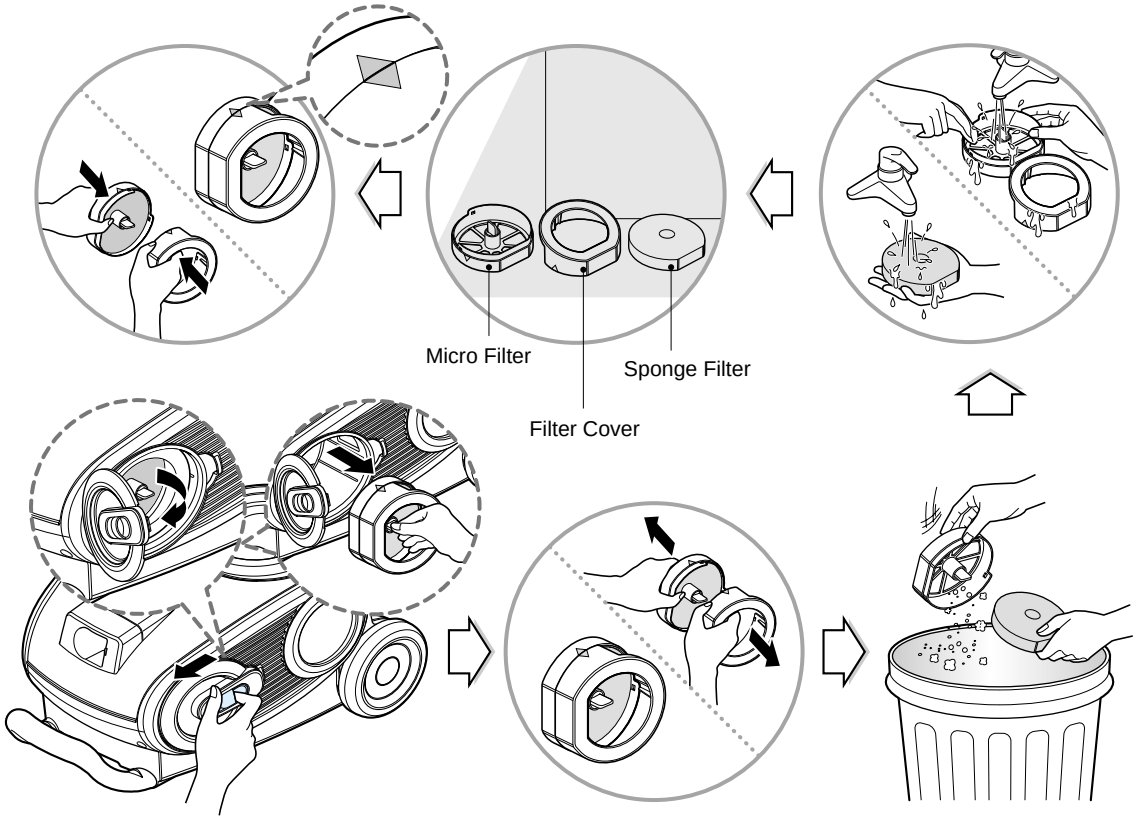

The dust filter is located below the filter cover as in above figure. If the LED is lighted up when the dust tank is not full, firstly clean the air filter.

- Release the lever of the main body toward the arrow mark as figure.
- Open the filter cover.
- Pull the dust filter out and the wash micro filter, sponge filter cover with water.
- Dry it in shade until the moisture is fully removed.
- The air filter should be cleaned every 6 months.

⚠ WARNING!

Gently rinse both parts separately under a cold running water until the water runs clear. Hand wash only with damp cloth. Shake off excess water from the filter.
Do not tumble/spindry, microwave or place in oven or on direct heat. Ensure the filter is completely dry.
Re-assemble and place it back in your machine, filter frame. If the filter is damaged, do not place them in the machine. Please call the Helpline.

⚠ SECOND BOX OF WARNING!

The cycle of the cleaning.

- Air filter
  - Every 6 months.
  - When the indicator light comes on.
- Exhaust filter
  - The exhaust filter should be cleand at least once a year.
- Dust Tank
  - When the dust tank is full by the position indicated as “MAX” in the container

How to Use Cleaning the Exhaust Filter

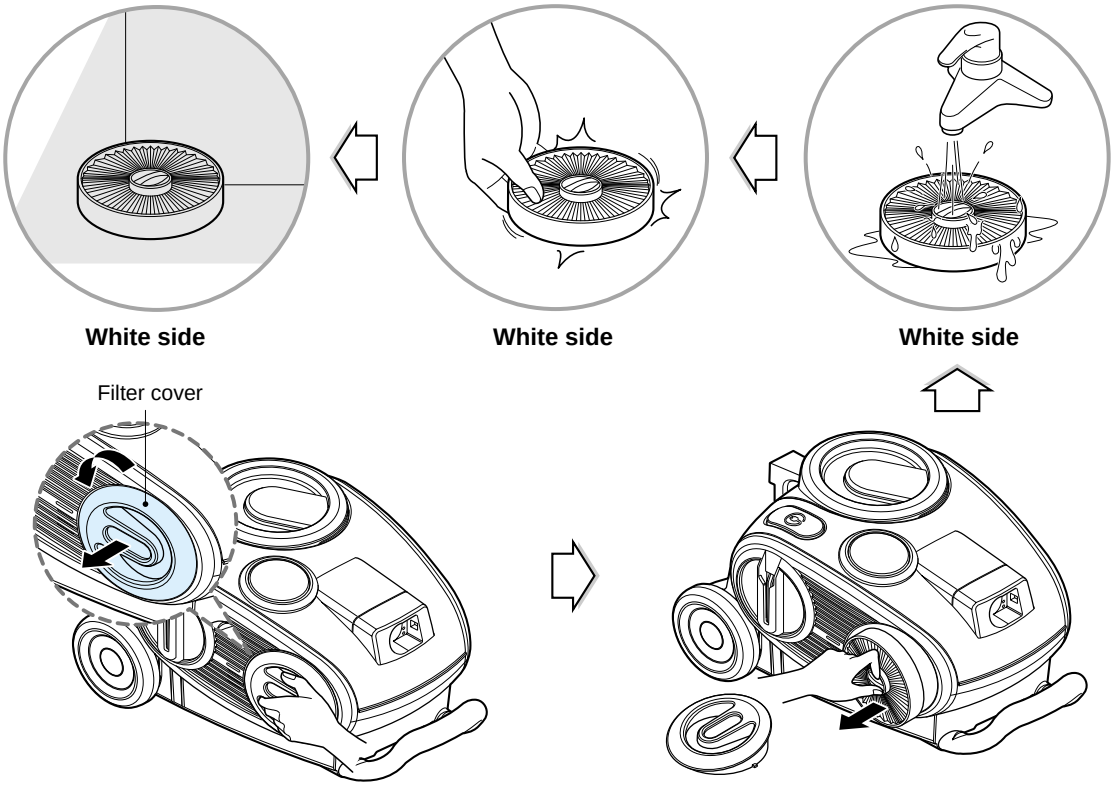

- The exhaust filter is a permanent washable HEPA filter.
- To clean the exhaust filter, remove the filter cover on the body by rotating the filter cover counter clockwise.
- Separate the filter assembled with the filter cover.
- Wash the filter in flow water cleanly.
- When you wash the filter, make sure don't wash the blue side.
- Remove moisture.
- Dry it in shade until moisture is fully removed.
- The exhaust filter should be cleaned at least once a year.

⚠ WARNING!

The cycle of the cleaning.
- Air filter
  - Every 6 months.
  - When the indicator light comes on.
- Exhaust filter
  - The exhaust filter should be cleand at least once a year.
- Dust Tank
  - When the dust tank is full by the position indicated as “MAX” in the container.

What to do if your vacuum cleaner does not work

Check that the vacuum cleaner is plugged in correctly and that the electrical socket is working

What to do when suction performance decreases

- Turn off the vacuum cleaner and unplug it.
- Check the telescopic pipe, flexible hose and cleaning tool for blockages or obstructions.
- Check that the dust tank is not full. Empty if necessary.
- Check that the exhaust filter is not blocked. Clean the exhaust filter, if necessary.
- Check that the pre-filter(air-filter) is not full. Clean the pre-filter, if necessary.

Thermal protector:
This vacuum cleaner has a special thermostat that protects the cleaner in case of motor overheating.
If the cleaner suddenly shuts off, turn off the switch and unplug the cleaner.
Check the cleaner for a possible source of overheating such as a full dust tank, a blocked hose or clogged filter.
If these conditions are found, fix them and wait at least 30 minutes before attempting to use the cleaner.
After the 30 minutes period, plug the cleaner back in and turn on the switch.
If the cleaner still does not run, contact a qualified electrician.



Disposal of your old appliance

1. When this crossed-out wheeled bin symbol is attached to a product it means the product is covered by the European Directive 2002/96/EC.
2. All electrical and electronic products should be disposed of separately from the municipal waste stream via designated collection facilities appointed by the government or the local authorities.
3. The correct disposal of your old appliance will help prevent potential negative consequences for the environment and human health.
4. For more detailed information about disposal of your old appliance, please contact your city office, waste disposal service or the shop where you purchased the product.

C K

WARNING!

Should it become necessary to replace the moulded plug then the detective plug should be replaced by a qualified electrician.

P/No.: 3828FI2873N
Made in KOREA