LG
Life's Good

OWNER'S MANUAL

AIR CONDITIONER

Please read this manual carefully before operating your set and retain it for future reference.

TYPE:PORTABLE AIR CONDITIONER

P09UCM0,P12UCM0

P/NO:MFL65920301

www.lg.com

INTRODUCTION

IMPORTANT SAFETY INSTRUCTIONS
Basic Safety Precautions 3, 4
Electrical Safety. 4, 6

PARTS AND FEATURES
Key Parts and Components 7
Control Panel and Remote 8

HOW TO USE
Before Using Your Air Conditioner 9, 10
Using the Controls. 11–13

INSTALLATON INSTRUCTIONS
Preparing for Installation 14
Window Vent Panel and Extensions 15
Installation in Vertical Sliding Windows. 16, 17
Installation in Casement Windows 18, 19

CARE AND CLEANING
Cleaning the Case. 20
Cleaning the Air Filter 20
Emptying the Water Collection Tank 21
Storing the Air Conditioner 22

TROUBLESHOOTING
Before Calling for Service. 23, 24

THANK YOU!

Congratulations on your purchase and welcome to the LG family.

Your new LG Air Conditioner combines high-efficiency operation with portable convenience.

By following the operating and care instructions in this manual, your air conditioner will provide you with many years of reliable service.

READ ALL INSTRUCTIONS BEFORE USE

Your safety and the safety of others is very important.

We have provided many important safety messages in this manual and on your appliance. Always read and obey all safety messages.

This is the safety alert symbol.
This symbol alerts you to potential hazards that can kill or hurt you and others.

All safety messages will follow the safety alert symbol and either the word “WARNING” or “CAUTION”. These words mean:

WARNING	This symbol indicates the possibility of death or serious injury.
CAUTION	This symbol indicates the possibility of injury or damage to property.

BASIC SAFETY PRECAUTIONS

WARNING To reduce the risk of fire, electric shock, or injury to persons when using this appliance, follow basic precautions, including the following:

- Do not attempt to repair or replace any part of your air conditioner unless it is specifically recommended in this manual. All other services should be referred to a qualified technician.
- If the power cord becomes worn or damaged, the cord should only be replaced by a qualified service technician using genuine replacement parts.
- The air conditioner should be plugged into its own grounded 15A,50 Hz, 240 VAC circuit.
- Do not plug other appliances into the same outlet; it can overload the circuit and cause a fire or electric shock.
- Do not remove the round grounding prong from the plug. It can result in the risk of electric shock.
- This air conditioner is not designed for use by young children. Young children should be supervised to ensure that they do not play with or climb on the air conditioner.
- Be sure all packaging materials are removed from the air conditioner before use. It can result in personal injury.
- Do not disassemble or modify the air conditioner or the power cord. It can result in the risk of electric shock or fire.
- Do not place the power cord or air conditioner near a heater, radiator, or other heat source. It can result in the risk of electric shock or fire.
- Do not use this or any appliance near flammable gases or liquids or other combustibles, such as gasoline, benzene, thinner, etc. It can result in the risk of electric shock or fire.
- Make sure the power cord is plugged firmly and completely into the outlet. It can result in the risk of electric shock or fire.
- Do not start or stop operation by plugging in or unplugging the power cord. It can result in the risk of electric shock.
- If the air conditioner is making unusual sounds or is emitting smoke or an unusual odor, unplug it immediately. It can result in the risk of electric shock or fire.
- Do not use if the electrical socket is loose or damaged. It can result in the risk of electric shock or fire.
- Do not operate with wet hands or in a damp environment. It can result in the risk of electric shock.
- Do not use this or any electrical appliance if you smell gas. It can result in the risk of fire or explosion.
- Turn off and unplug the air conditioner before cleaning to avoid the risk of electric shock.
- Do not clean the unit with water. Water can enter the unit and damage the insulation, creating a shock hazard. If water enters the unit, unplug it immediately and contact Customer Service. It can result in the risk of electric shock.
- Use two or more people to lift and install the unit. Failure to do so can cause back injury or other injuries.

READ ALL INSTRUCTIONS BEFORE USE

BASIC SAFETY PRECAUTIONS

⚠CAUTION To reduce the risk of fire, electric shock, or injury to persons when using this appliance, follow basic precautions, including the following:

- To avoid possible cuts, avoid contacting the metal parts of the air conditioner when removing or reinstalling the filter. It can result in the risk of personal injury.
- Do not block the air inlet or outlet of the air conditioner. Reduced air flow will result in poor performance and could damage the unit.
- Always grasp the plug when plugging in or unplugging the air conditioner. Never unplug by pulling on the cord. It can result in result in the risk of electrical shock and damage.
- Always turn off and unplug the air conditioner when it will not be used for extended period of time. This conserves energy and reduces the chance of accidents.
- Secure the wheels with blocks to prevent the air conditioner from rolling on smooth floors.
- Install the air conditioner on a sturdy, level floor capable of supporting up to 50 kg (110 lbs). Installation on a weak or unlevel floor can result in result in the risk of property damage and personal injury.
- Make sure the air conditioner is the correct size for the area you wish to cool. Using an air conditioner that is the wrong size can waste energy and damage the air conditioner.
- Close all doors and windows to the room for most efficient operation.
- To prevent damage to the surface finish, use only a soft cloth to clean the air conditioner. Do not use wax, thinner, or a strong detergent.
- To prevent spills and property damage, be sure to drain the air conditioner properly.
- To prevent the coils from freezing, do not operate the air conditioner if the room temperature is below 18°C (65°F).
- Do not position the air conditioner so that pets or house plants are exposed to the direct air flow. It can result in the risk of injury to pets or house plants.
- This air conditioner is designed for normal household use. Do not use for cooling pets, foods, precision machinery, or art objects.
- Do not drink the water from the drain pan. Dispose of it properly outdoors or down the drain.
- Do not operate air conditioner without the filter securely in place. Operation without the filter could damage the unit.
- Clean the filter every two weeks, or more often if needed.
- If you eat the liquid from the batteries, brush your teeth and see doctor. Do not use the remote if the batteries have leaked. The chemicals in batteries could cause burns or other health hazard.
- If the liquid from the batteries gets onto your skin or clothes, wash it well with clean water. Do not use the remote if the batteries have leaked. The chemicals in batteries could cause burns or other health hazard.

ELECTRICAL SAFETY

⚠WARNING

Electrical Shock Hazard

Failure to follow these instructions can result in death, fire, or electrical shock.

- This unit must be properly grounded.
- Do not, under any circumstances, cut or remove the ground prong.
- If you do not have a properly grounded outlet, or if there is any doubt that the outlet is not properly grounded, a qualified electrician should check the outlet and circuit, and, if necessary, install a properly grounded outlet.
- This air conditioner must be plugged into a grounded 50 Hz, 240 VAC outlet protected by a 15 amp time delay fuse or circuit breaker.
- This air conditioner must be installed in accordance with national wiring codes.
- Do not alter or modify the plug or cord of this air conditioner. If the power cord becomes worn or damaged, the cord should only be replaced by a qualified service technician using genuine replacement parts.
- Do not use an extension cord.

READ ALL INSTRUCTIONS BEFORE USE

Always install the expansion panel(s).

- No installation may cause fire and electric shock accident.

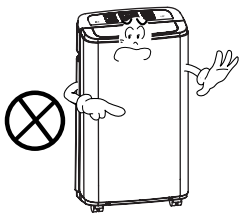

Do not place the power cord near a heater.

- It may cause fire and electric shock.

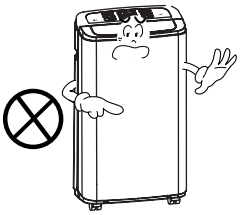

Do not use the power cord near flammable gas or combustibles such as gasoline, benzene, thinner, etc.

- It may cause explosion or fire.

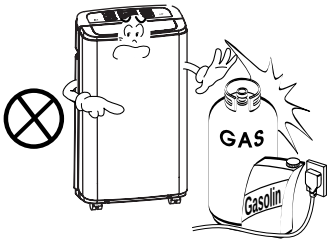

Do not disassemble or modify products.

- It may cause failure and electric shock.

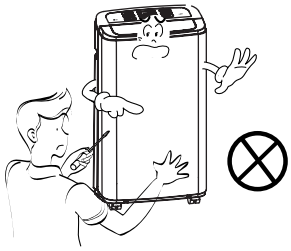

Plug in the power plug properly.

- Otherwise, it will cause electric shock or fire due to heat generation or electric shock.

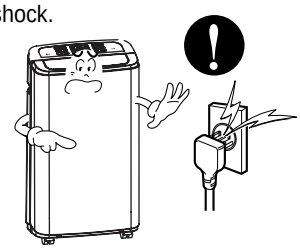

Do not operate or stop the unit by inserting or pulling out the power plug.

- It will cause electric shock or fire due to heat generation.

Do not damage or use an unspecified power cord.

- It will cause electric shock or fire.

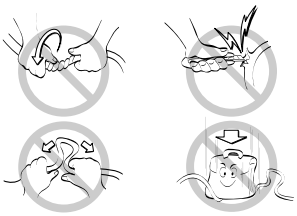

Do not modify power cord length.

- It will cause electric shock or fire due to heat generation.

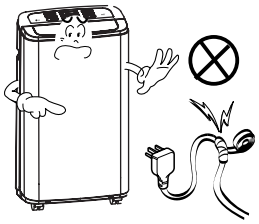

Do not share the outlet with other appliances.

- It will cause electric shock or fire due to heat generation.

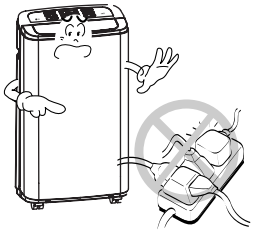

Always plug into a grounded outlet.

- No grounding may cause electric shock (See Installation Manual).

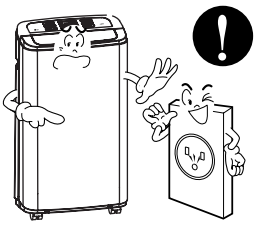

English

READ ALL INSTRUCTIONS BEFORE USE

Unplug the unit if strange sounds, odors, or smoke come from it.

- Otherwise it may cause fire and electric shock accident.

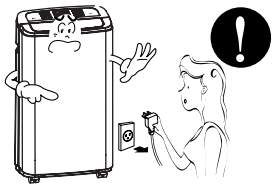

Do not block the inlet or outlet.

- It may cause failure of appliance or accident.

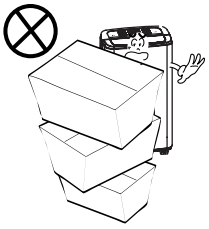

Turn off the main power switch when not using it for a long time.

- Prevent accidental startup and the possibility of injury.

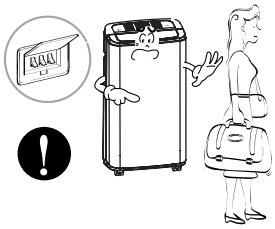

Do not use this appliance for special purposes such as pets, foods, precision machinery, or objects of art.

- It is an air conditioner, not a precision refrigeration system.

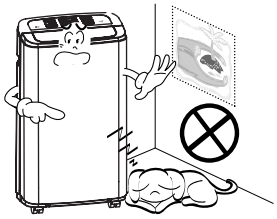

Do not use the socket if it is loose or damaged.

- It may cause fire and electric shock.

Do not place heavy object on the power cord and take care so that the cord should not be pressed.

- There is danger of fire or electric shock.

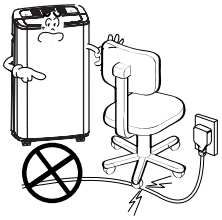

Turn off the power and breaker firstly when cleansing the unit.

- Since the fan rotates at high speed during operation, it may cause injury.

Use a soft cloth to clean. Do not use wax, thinner, or a strong detergent.

- The appearance of the air conditioner may deteriorate, change color, or develop surface flaws.

Do not operate with wet hands or in damp environment.

- It will cause electric shock.

Hold the plug by the head when taking it out.

- It may cause electric shock and damage.

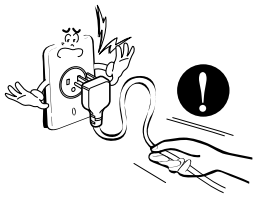

Do not put a pet or house plant where it will be exposed to direct air flow.

- This could injure the pet or plant.

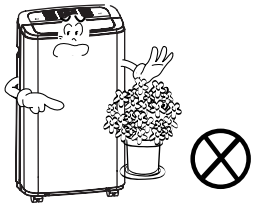

Do not drink water drained from air conditioner. / Do not direct airflow at room occupants only.

- It contains containments and will make you sick. / This could damage your health.

English

KEY PARTS AND COMPONENTS

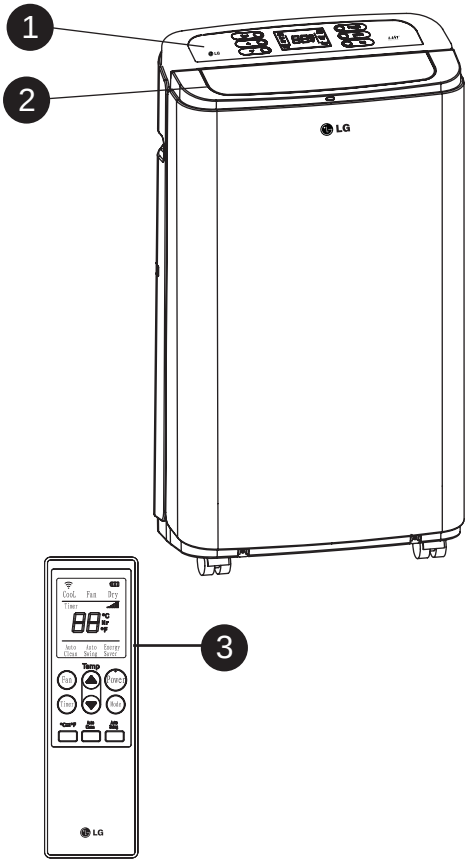

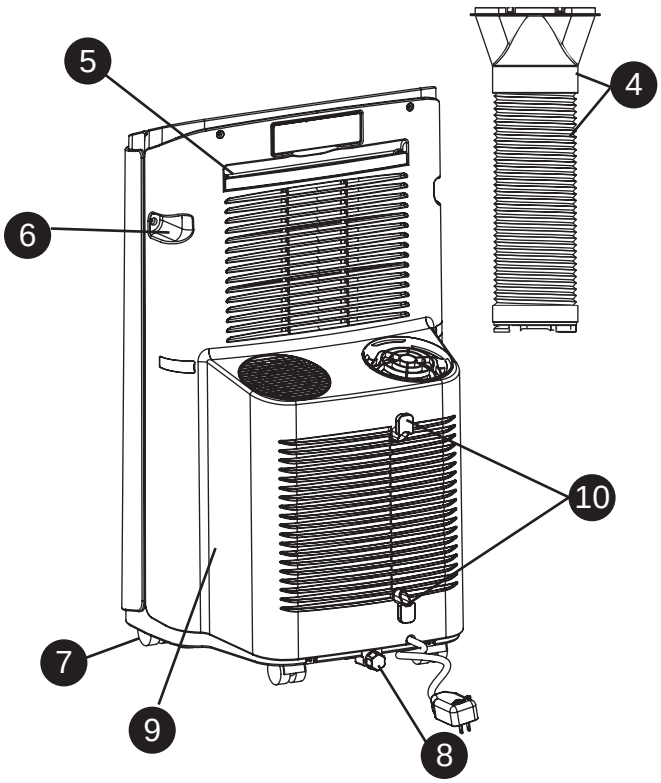

1 ***CONTROL PANEL AND DISPLAY***

Easy-to-read white LCD display shows the operation state. Digital touch buttons make changing settings quick and easy.

2 ***MOTORIZED AIR DISCHARGE***

The adjustable louvered air discharge opens automatically when the air conditioner is turned on, and closes when it is turned off. It can also be set to oscillate to distribute air more evenly through the room.

3 ***INFRARED REMOTE CONTROL***

The LCD remote control allows you to adjust the temperature and operate most functions of the air conditioner from across the room.

4 ***HOSE AND DIFFUSER***

Use the diffuser and hose to connect the air conditioner to the window installation kit to vent exhaust air outside.

5 ***FILTER***

You can pull out and insert the filter easily.

6 ***HANDLES***

The handles provide a convenient grip when lifting the air conditioner.

7 ***SWIVELING CASTERS***

Swiveling casters allow you to move the air conditioner easily on most floor surfaces.

8 ***BOTTOM DRAIN PORT***

Before moving the unit, drain the internal water collection tank completely by using bottom drain port.

9 ***MULTI-SPEED FANS***

The air conditioner features two multi-speed fans: a circulation fan for moving air inside the room, and an exhaust fan to vent hot air outdoors through the hose and diffuser.

10 ***POWER SUPPLY CORD HOLDER***

Wrap power supply cord around the holders for your convenience.

CONTROL PANEL AND REMOTE

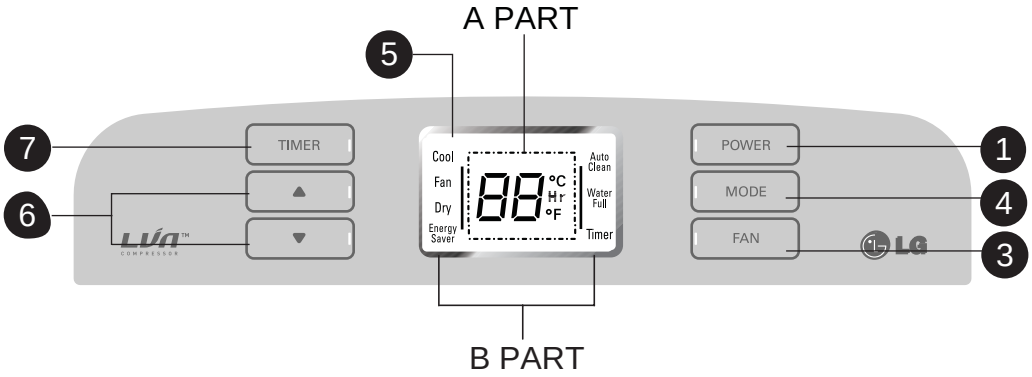

Operation of functions is the same when using the remote or the control panel, unless otherwise stated.

For detailed instructions on each function, see the following pages

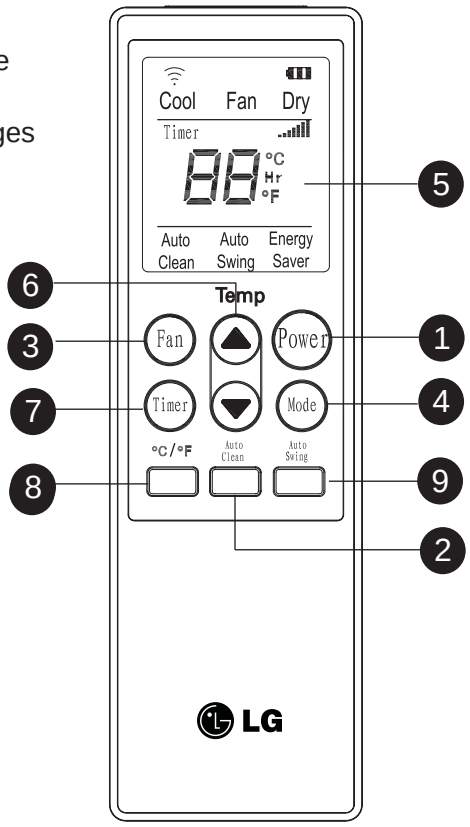

1 ***POWER ON/OFF***

Turns the air conditioner on and off. When turning on, a rising tone will sound to confirm. When turning off, a descending tone will sound.

2 ***AUTO CLEAN***

The AUTO CLEAN function is used to remove moisture from the heat exchangers and helps prevent odor from forming. This function can be activated from the Remote only.

3 ***FAN SPEED***

Adjusts the circulation fan speed between low (F1), medium (F2), and high (F3).

4 ***MODE***

Switches the air conditioner between COOL, FAN,DRY, and ENERGY SAVER modes. The active mode will be shown in the LCD display.

5 ***LCD DISPLAY***

A PART shows the set temperature (℃ or ℉) , fan speed, or the selected TIMER delay.
B PART shows the active mode(COOL,FAN,DRY and ENERGY SAVER),Auto clean,Water full and Timer.

6 ***▲ / ▼(TEMP/TIMER)***

Use these buttons to adjust the set temperature up or down, or to adjust the timer delay time.

7 ***TIMER***

Allows you to set a delay from 1 to 24 hours that will turn the air conditioner on or off automatically.

8 **°C / °F**

Use this button,the temperature display can be switched between degrees Celsius(℃) and degrees Fahrenheit(℉)

9 ***AUTO SWING***

Sets the motorized air discharge to oscillate, improving air circulation in the room. This function can only be activated and displayed from the remote control.

English

BEFORE USING YOUR AIR CONDITIONER

PREPARING FOR OPERATION

Refer to the Installation Instructions included in this manual before using the air conditioner.

Once the air conditioner has been properly assembled and installed:

1. Plug the power cord into its own dedicated properly grounded outlet. You will hear a tone to confirm that the conditioner is plugged in. Do not plug other appliances into the same outlet; it could overload the outlet and create a fire hazard.
2. Make sure the air conditioner and cord is positioned where it does not create a tripping hazard and will receive adequate ventilation. Do not place it directly next to furniture or objects that could block the vent openings.
3. Make sure that any items that could be blown over or damaged by the airflow from the fan are out of the airflow path.

IMPORTANT:

- Do not remain in the direct airflow from the air conditioner for extended periods of time.
- To prevent damage or injury to pets and plants, make sure they are not exposed to direct airflow from the air conditioner.
- When used at the same time as stoves, fireplaces, and other combustion devices, make sure there is a sufficient flow of fresh air into the room. Do **not** use in tightly enclosed spaces with these types of devices.
- This air conditioner is intended for household use as a consumer comfort appliance. Do **not** use it as a precision climate control system, or for purposes such as cooling precision equipment, food, pets, plants, artwork, etc. Such items could be damaged.
- Do not bend the hose downward when window installation kit is not applied. It may cause failure of air conditioner or performance deterioration.

UNPACKING THE AIR CONDITIONER

Remove and store packing materials for reuse.

Remove any shipping tape before using the air conditioner. If the tape leaves behind any adhesive, rub a small amount of liquid dish soap onto it and wipe with a damp cloth. Do NOT use sharp instruments, alcohol, thinners, or abrasive cleaners to remove adhesive. They could damage the finish.

BEFORE USING YOUR AIR CONDITIONER

INSERTING BATTERIES IN THE REMOTE

Before using your remote, install the provided AAA batteries:

1. Press and glide the battery cover on the back of the remote,then you can remove the cover.
2. Insert two new alkaline AAA batteries into the battery compartment, being sure to note the proper polarity.
3. Reattach the battery cover, making sure the locking tab clicks into place.

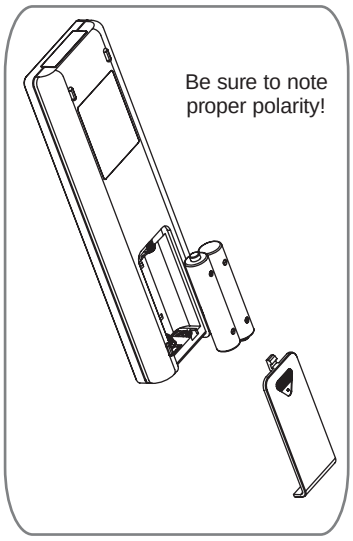

NOTES:

- Use only alkaline batteries. Do not use rechargeable batteries.
- When replacing batteries, always replace both batteries with new batteries. Do not mix old and new batteries.
- If the air conditioner will not be used for an extended period of time, remove the batteries from the remote.

REMOTE STORAGE

Your air conditioner has a special place for convenient storage the remote control.
See Right Figure.

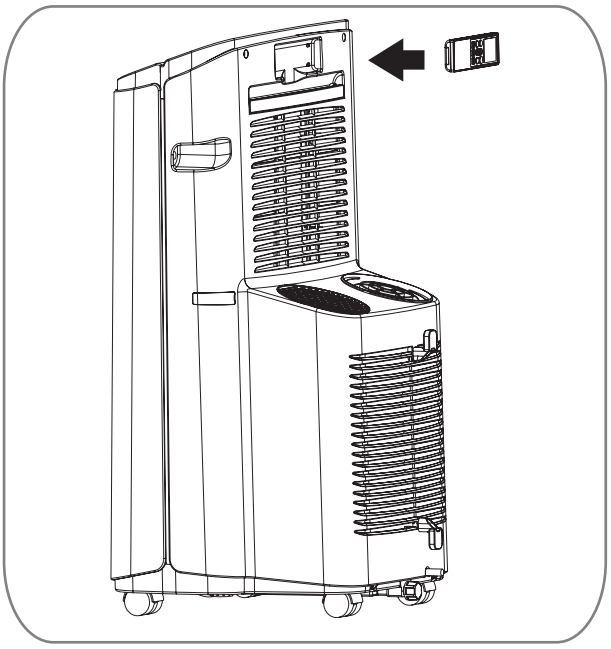

NOTE:

In order to avoide lossing the remote,please put the remote inside of the storage place when you not use it.

⚠CAUTION

- **If the liquid from the batteries gets onto your skin or clothes, wash it well with clean water.**
  Do not use the remote if the batteries have leaked.
- **If you eat the liquid from the batteries, brush your teeth and see doctor.**
  The chemicals in batteries could cause burns or other health hazards.

English

USING THE CONTROLS

*Control panel buttons shown. Operation using the remote control is the same, unless specifically noted.**NOTE:** The remote sensor is located under the air discharge and on the top of the front panel.*

POWER

Press the **POWER** button to turn the air conditioner ON or OFF. When you turn the air conditioner on, an ascending tone will play and the LCD display will show the set temperature and any active mode.The air discharge on the top of the air conditioner wil automatically open.

When turning the air conditioner off, you will hear a descending tone and the air discharge on the top of the air conditioner will close.

Any control settings such as Mode, Set Temperature, Auto Swing, etc. will be retained in memory when the power is off.

NOTE: When turned on after being unplugged, the air conditioner will automatically reset to COOL mode, with a temperature setting of 22°C. Any settings will need to be re-entered.

Always point the remote at the sensor. The remote may not work if the sensor is in bright light or if there is not a clear path between the remote and the sensor.

MODE

Press the **MODE** button to select the operating mode (COOL, FAN,DRYor ENERGY SAVER) for the air conditioner.And you can see the active mode through the LCD Display.

The default setting is COOL. Press the **MODE** button to change to FAN, press again to change to DRY, again to change to ENERGY SAVER,and again to return to COOL.

Mode	Features
COOL	Compressor runs and cools the room. Use the ▲ / ▼ and **FAN** buttons to set the desired temperature and circulation fan speed.
FAN	Fan circulates air but compressor does not run. Use the **FAN** button to set the desired fan speed.
DRY	Dry mode is used to remove humidity from the room without additional cooling. Once the set temperature is reached, the compressor and circulation fan turns off and only the exhaust fan will run. Fan speed is pre-set and cannot be adjusted.
ENERGY SAVER	Under normal operation, the exhaust fan cycles on and off with the compressor, and the circulation fan runs at the set speed. The mode helps reduce power consumption by automatically turning off the circulation fan as well as the exhaust fan when the compressor is off. The air conditioner will automatically cycle both fans on and off with the compressor as needed for cooling.

USING THE CONTROLS

FAN

Pressing the **FAN** button cycles the circulation fan speed from low (F1) to medium (F2) to high (F3).The selected fan speed will be shown in the LCD display. The function can be used in either COOL or FAN modes.

When changing fan speeds, there is a brief delay before the fan motor changes speed.

▲ / ▼(TEMP/TIMER)

In COOL and DRY modes, the **▲/ ▼(TEMP/TIMER)** buttons adjust the set temperature up to 30°C or down to 16°C , in one degree increments. The temperature can be switched between degrees Fahrenheit and degrees Celsius, pressing the ▲button and ▼button at the same time,or pressing °F ⇄ °C button on the remote.

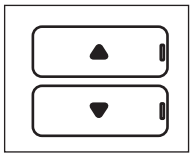

When the TIMER function is selected, use the **▲/ ▼(TEMP/TIMER)** buttons to adjust the delay time from 1 to 24 hours, in one hour increments.

If you press and hold the **▲/ ▼(TEMP/TIMER)** buttons, the set temperature or time will change automatically after a few seconds.

NOTE: The displayed temperature is the SET temperature, not the room temperature.In COOL, DRYor ENERGY SAVER mode, the thermostat in the air conditioner will run the compressor until the set temperature is reached, then cycle the compressor on and off to maintain the set temperature.

TIMER

When the**TIMER** function is selected, you can set the air conditioner to either automatically turn OFF or turn ON after a delay of up to 24 hours. The display will show 0.Use the ▲/▼(TEMP/TIMER) buttons to adjust the delay time from 1 to 24 hours, in one hour increments.

To set an automatic off delay, press the TIMER button while the air conditioner is running and use the ▲/▼(TEMP/TIMER)buttons to adjust the delay time. The air conditioner will automatically turn OFF after the set delay.

To set an automatic on delay, press the TIMER button while the air conditioner is off and use the ▲/▼(TEMP/TIMER) buttons to adjust the delay time.
The display will show the number of hours remaining until the unit is set to come on. The air conditioner will automatically turn ON after the set delay.

If you want to know how many hours you have setted, press the **TIMER** button and then you can see the time through the LCD display.
If you want to change the set timer,press the **TIMER** button and adjust the time when the number is flickering.
To cancel the Timer function,one method is press the **TIMER** button and adjust the number to"0" when the number is flickering,then the function will be canceled in a few seconds.
Another better method is Press the **TIMER** button and Press this button again when the number is still flickering.

NOTE: Do not unplug the air conditioner when using the timer function.

English

USING THE CONTROLS

AUTO CLEAN

- To turn the **AUTO CLEAN** function on, press the **AUTO CLEAN** button while the air conditioner is running in COOL,DRY or ENERGY SAVER mode. This function can only be selected from the remote;it is not available from the control panel.It must be set each time you wish to run the **AUTO CLEAN** function.

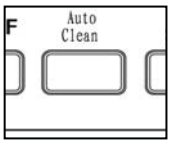

AUTO CLEAN is used to remove moisture from the heat exchange coils. This helps prevent the formation of mildew and odors.

1. To use **AUTO CLEAN**
   With the air conditioner running in COOL, DRY or ENERGY SAVER mode, press the **AUTO CLEAN** button.
2. "**AUTO CLEAN**" will be displayed in the LCD diplay.

   Press the POWER button to turn the air conditioner off.**AUTO CLEAN** will run the circulation and exhaust fans with the compressor off for a few minutes after the power is turned off.

To cancel **AUTO CLEAN**, or to stop an **AUTO CLEAN** cycle in process, simply press the **AUTO CLEAN** button again. The **AUTO CLEAN** function will not operate if the air conditioner is already off.

AUTO SWING

AUTO SWING function can only be activated with the remote. When this function is on, the air discharge will oscillate to circulate air more evenly through the room. To turn this function off, simply press the **AUTO SWING** button with the remote again.

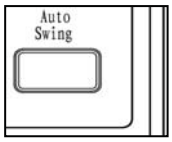

With **AUTO SWING** off, you may also manually adjust the air discharge to the desired position. It will maintain this position until the air conditioner is turned off or **AUTO SWING** is activated.

°C / °F

°C / °F function can only be activated with the remote.When the displayed temperature is °C(of °F),you can press this button to swith to °F(or °C) .

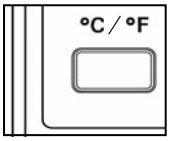

PREPARING FOR INSTALLATION

⚠WARNING The air conditioner is heavy! Use two or more people to lift and install the unit! Failure to do so could result in back injury or other injuries.

EXHAUST COMPONENTS

The following components are used for window venting.
Not all components are used for every installation.

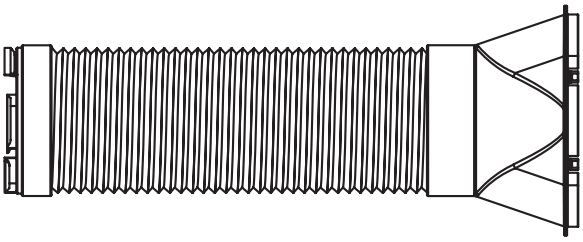

Flexible Venting Hose Diffuser

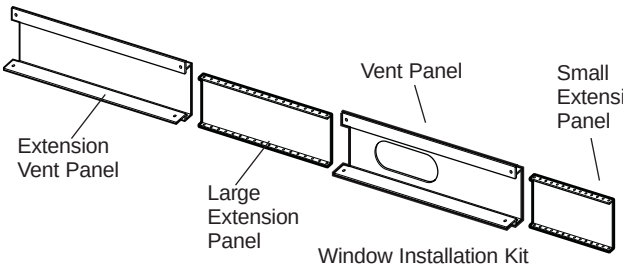

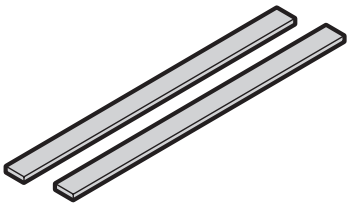

2 Type A Foam Seals (adhesive)

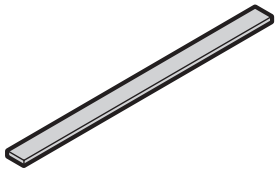

1 Type B Foam Seal (non-adhesive)

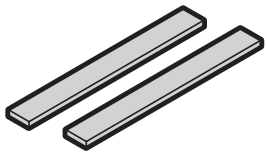

2 Type C Foam Seals (Adhesive type-Shorter)

Security Bracket

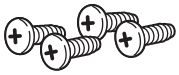

4 Type A Screws

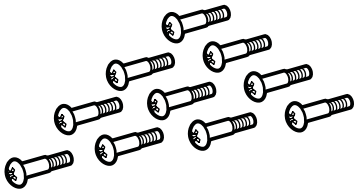

10 Type A Screws

English

WINDOW VENT PANEL AND EXTENSIONS

The window installation kit allows you to install the air conditioner in most vertical-sliding windows 460 mm to 1220 mm wide, or casement-style windows from 460mm to 1220 mm high.

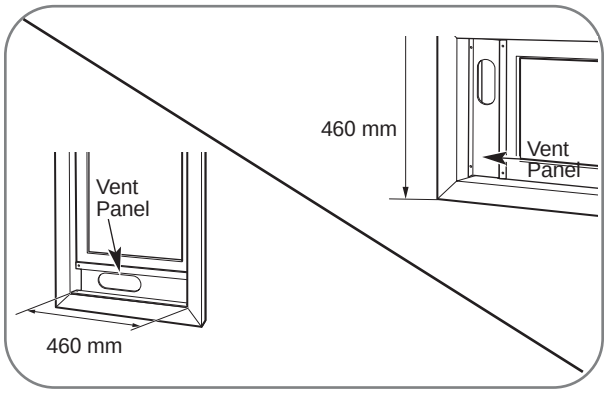

For an 460 mm window opening, use the window vent panel by itself.

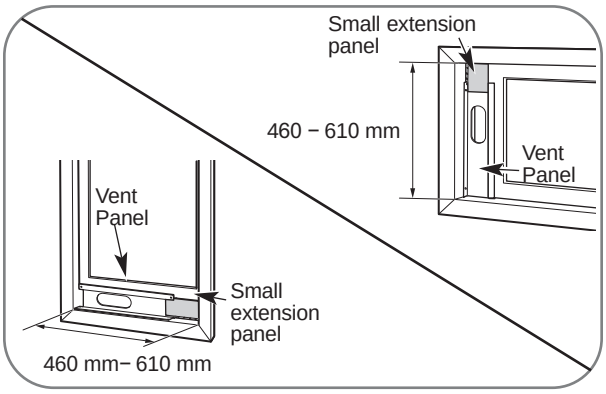

For window openings from 460 mm to 610 mm, use the window vent panel and the small extension panel.

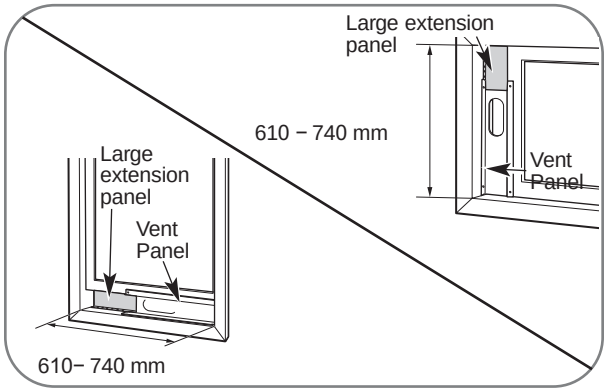

For window openings from 610 mm to 740 mm, use the window vent panel and the large extension panel.

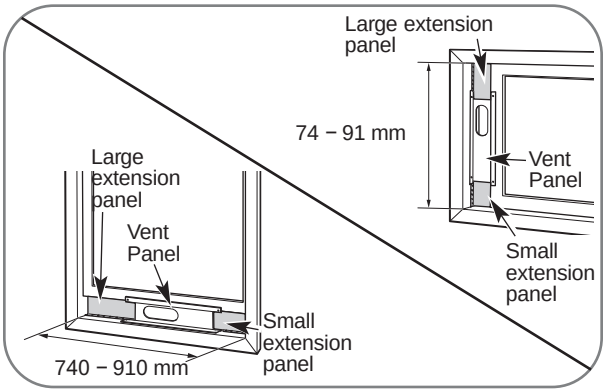

For window openings from 740 to 910 mm, use the window vent panel and both extension panels.

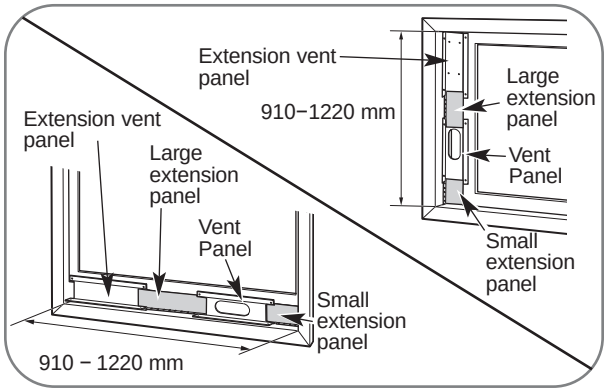

For window openings from 910 to 1220 mm, use both vent panels and both extension panels.

English

INSTALLATION IN VERTICAL SLIDING WINDOWS

NOTE: *The window installation kit can be used with vertical sliding windows between 450mm and 1220 mm wide.*

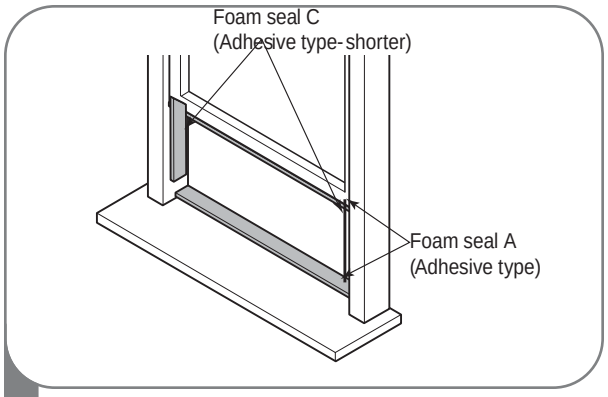

1 Cut the foam seal A(adhesive type) & C(adhesive type-shorter) to the proper length, and attach it to the window sash and frame.

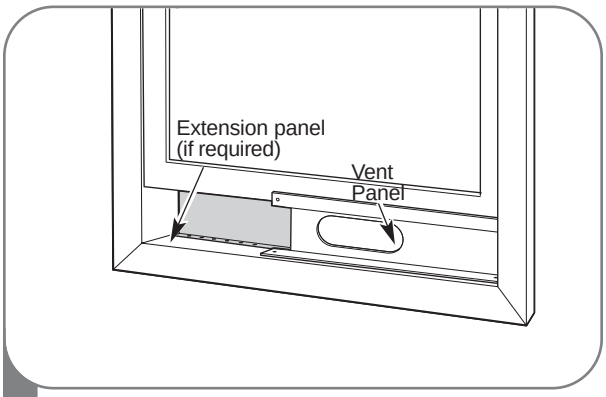

2 Insert the vent panel assembly, including extension panels, if needed, into the window opening. Extend the extension panels, if used.

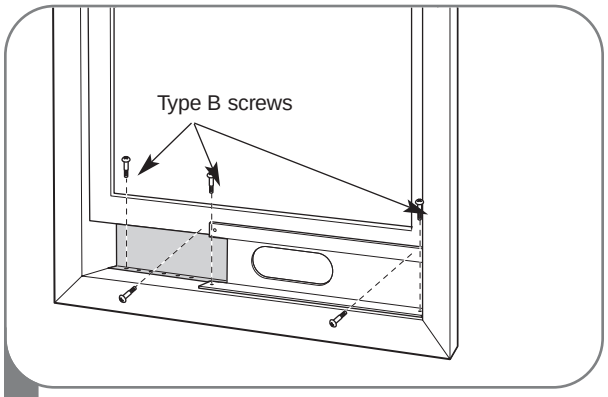

3 Carefully lower the window. Secure the vent panel in place with 4 type B screws, plus one screw for each extension:

Vent panel only:	4 type B screws
Vent panel and one extension:	5 type B screws
Vent panel and two extensions:	6 type B screws
Two vent panels and two extensions:	9 type B screws

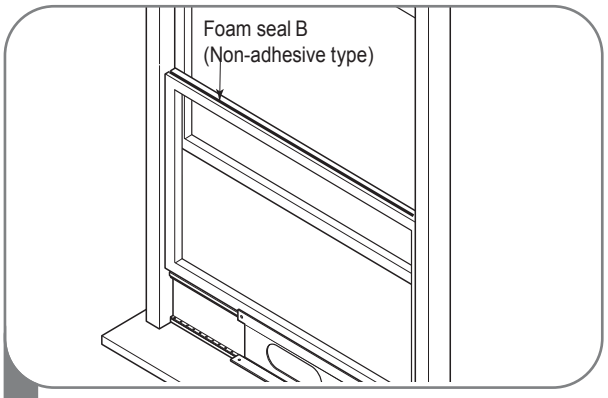

4 Cut the foam seal B(Non-adhesive type) to the window width. Stuff the foam seal B between the glass and the window to prevent air and insects from getting into the room.

English

INSTALLATION IN VERTICAL SLIDING WINDOWS

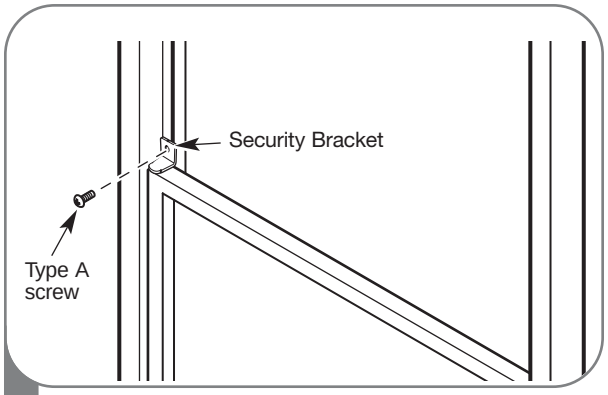

5 Install the security bracket with a type A screw, as shown.

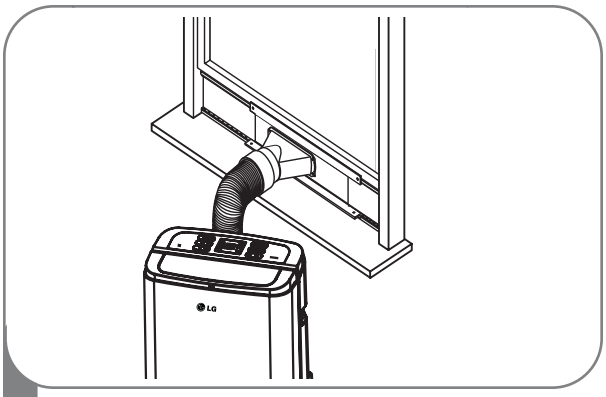

6 Insert the oval end of the diffuser into the window installation kit until the locking tabs engage.

English

INSTALLATION IN CASEMENT STYLE WINDOWS

NOTE: The window installation kit can be used with casement windows between 460 mm and 1220 mm tall.

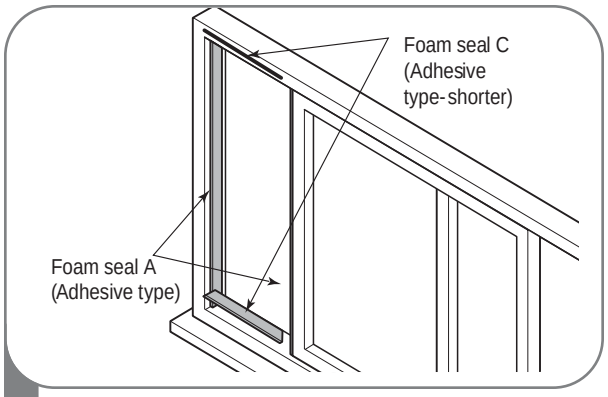

1 Cut the foam seal A(adhesive type) & C(adhesive type-shorter) to the proper length, and attach it to the window sash and frame.

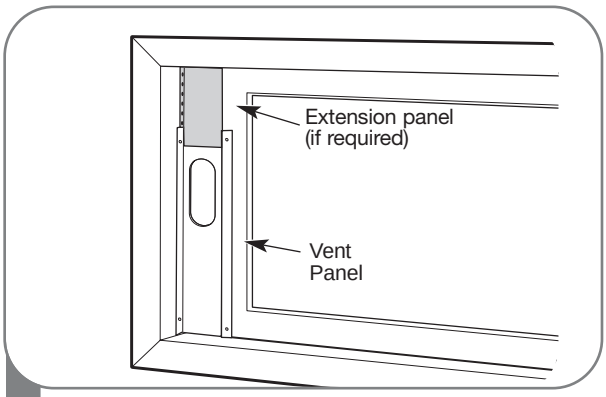

2 Insert the vent panel assembly, including extension panels, if needed, into the window opening. Extend the extension panels, if used.

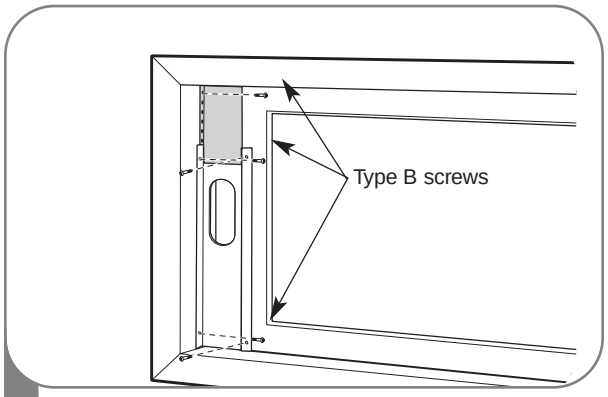

3 Carefully close the window. Secure the vent panel in place with 4 type B screws, plus one screw for each extension:

Vent panel only:	4 type B screws
Vent panel and one extension:	5 type B screws
Vent panel and two extensions:	6 type B screws
Two vent panels and two extensions:	9 type B screws

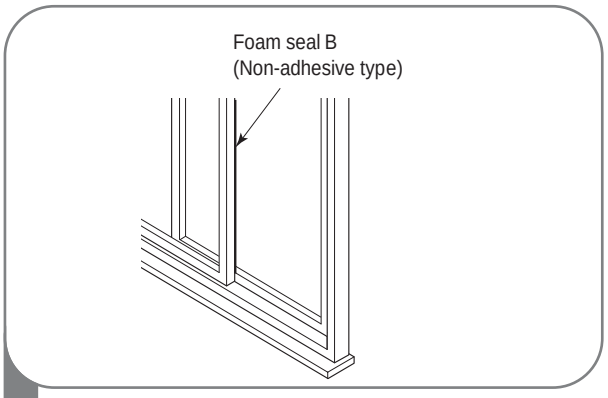

4 Cut the foam seal B(Non-adhesive type) to the window height. Stuff the foam seal B between the glass and the window to prevent air and insects from getting into the room.

English

INSTALLATION IN CASEMENT STYLE WINDOWS

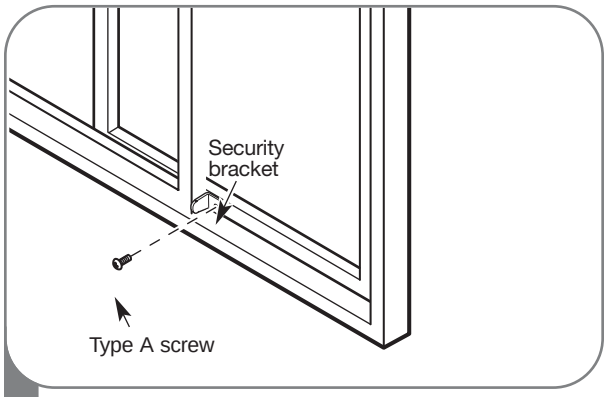

5 Install the window security bracket with a type A screw, as shown.

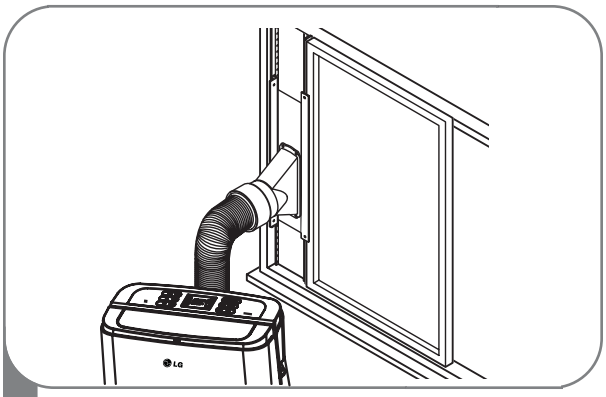

6 Insert the oval end of the diffuser into the window installation kit until the locking tabs engage.

English

Your air conditioner is designed for year-round operation with only minimal cleaning and maintenance.

For maximum efficiency, it is recommended that you have the cooling coils inspected and cleaned annually. Your local LG Authorized Service Center can provide this inspection and cleaning service for a nominal fee.

⚠ WARNING

- **Unplug the air conditioner before cleaning or performing any maintenance or servicing.**
- **Be careful when cleaning coils or removing or reinstalling the filter—the cooling fins are sharp!**

Failure to follow the above precautions could result in electrical shock or personal injury.

CLEANING THE CASE

Wipe the case with a slightly damp cloth, then wipe dry with a dry cloth or towel.

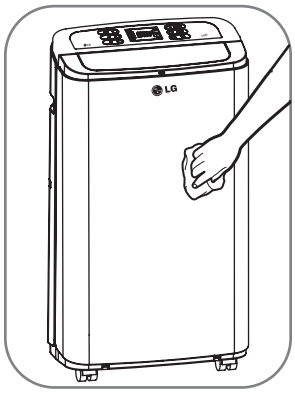

- **To prevent damage to the finish, do not use gasoline, benzene, thinner, etc., or any abrasive cleansers to clean the air conditioner; they may damage the finish.**
- **Never pour water onto or into the unit; it could damage internal components and create a shock and fire hazard.**

CLEANING THE AIR FILTER

The air filter should be cleaned every two weeks; depending on indoor air quality, more frequent cleaning may be needed. A dirty air filter will decrease airflow and reduce efficiency.

Do not operate the air conditioner without the air filter in place.

1. Grasp the grip which is in the center and on the top of the filter and pull out the filter directly.

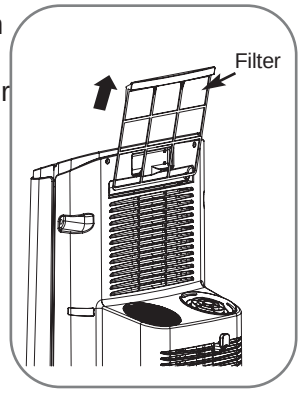

2. Use a vacuum cleaner to clean the filter. If the filter is heavily soiled, it can be washed in warm water using a mild detergent. **Do not use harsh cleaners or very hot water. Do not wash in a dish asher**
3. Allow the filter to dry completely before reinstalling.
4. Reinsert the filter, making sure that the bottom of the filter is between the tabs and the coil guard. Reinstall the filter cover, making sure it clips into place.

EMPTYING THE WATER COLLECTION TANK

Using the bottom drain port

When the internal water collection tank is full, FL will appear in the display and the air conditioner will turn off until the tank is emptied.

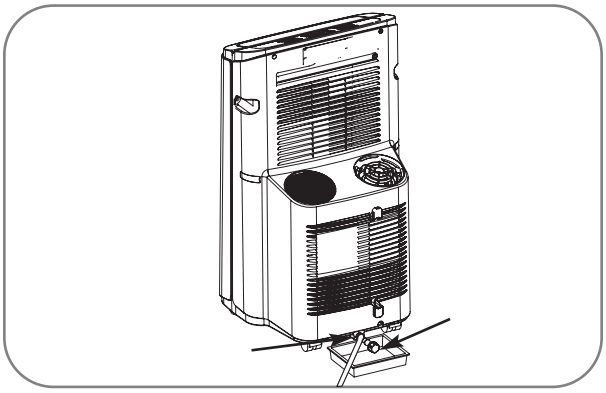

1. Unplug the air conditioner, disconnect the exhaust hose from the back, and move the air conditioner to a suitable drain location or outdoors. You may also place a pan under the drain that will hold up to 1 quart of water.
2. Remove the drain cap and the rubber plug from the drain outlet.
3. Once the water collection tank is drained, reinstall the rubber plug and the drain cap, making sure it is on securely.
4. Place the air conditioner in the desired location, reconnect the exhaust hose, and plug in the air conditioner.
5. When need dehumidification in high humidity
6. Under the Cool or Fan mode, there`s no need of water drainage
7. During dehumidifying mode, remove the drain plug and the exhaust hose from the back of the unit.
8. Install a drain hose (φ10mm inner dimension) and place the open end of the hose a suitable drain location or outdoors.

Note: If the water full alarm is often on, there may be some malfunction about the unit. Contact the professional service for help.

English

NOTICE ***FL apperars in the display***

The water collection tank is full, drain the tank and reset your setting.

NOTES:

- When turned on after being unplugged, the air conditioner will automatically reset to COOL mode, with a temperature setting of 22°C.

STORING THE AIR CONDITIONER

If the air conditioner will not be used for an extended period of time:

1. Drain the water collection tank completely and leave the bottom drain cap and rubber plug long enough to allow any residual water to drain out. Once the tank is completely drained and no more water flows out, reinstall the rubber plug and cap.
2. Remove and clean the filter, allow it to dry completely, then reinstall it.
3. Remove the batteries from the remote.
4. Store the air conditioner in a cool, dry location, away from direct sunlight, extreme temperatures, and excessive dust.

Before using the air conditioner again:

1. Make sure the filter and drain cap are in place.
2. Check the cord to make sure it is in good condition, with no cracks or damage.
3. Place new batteries in the remote.
4. Install the air conditioner as described in the Installation Instructions.

BEFORE CALLING FOR SERVICE

Before you call for service, review this list. It may save you time and expense. This list includes common occurrences that are not the result of a defect in workmanship or materials.

Problem	Possible Causes	Solutions
Air conditioner will not start	• The air conditioner plug is not completely inserted in the electrical outlet.	• Make sure electrical plug is plugged completely into a live, properly grounded outlet.
	• The house fuse is blown or the circuit breaker has tripped.	• Replace the fuse or reset the circuit breaker. Make sure that there are no other appliances on the same circuit.
	• Power failure.	• If a power failure occurs, turn the power OFF. When power is restored, wait 3 minutes before restarting the air conditioner.
	• The integrated circuit breaker in the plug has tripped.	• Press the RESET button on the air conditioner plug. If the reset button will not stay engaged, unplug the air conditioner and contact a qualified service technician.
	• ***FL*** appears in the display.	• The water collection tank is full. Drain the tank and reset your settings. See the Care and Cleaning section.
	• Room temperature is less than the set temperature.	• This is normal. The air conditioner automatically shuts off when the room equals or is less than the set temperature. Adjust the temperature setting, if needed.
Air conditioner does not cool properly	• Airflow is restricted.	• Make sure there is sufficient clearance around the air conditioner and that the air inlet and outlet are not blocked by furniture, curtains, etc.
	• The air filter is dirty.	• Clean the air filter at least every two weeks. See the *Care and Cleaning* section.
	• The room is very hot, or not enough time allowed for cooling.	• When first turned on, allow the air conditioner sufficient time to cool the room.
	• Cold air is escaping.	• Check for open furnace floor registers or cold air returns, or open windows or doors.
	• Cooling coils have iced up.	• In especially hot, humid weather and when the air conditioner is running frequently or for extended periods, ice can form on the cooling coils, blocking air flow. Set the controls to High Fan (F3) or High Cool (F3), and set to a warmer temperature.
Air conditioner runs too often or too long	• Area to be cooled is too large for the air conditioner.	• Consult your dealer for the air conditioner capacity necessary to cool the desired area.
	• Doors or windows are open.	• Make sure doors and windows are closed.

BEFORE CALLING FOR SERVICE

Problem	Possible Causes	Solutions
Code appears in the display :		
F1, F2, or F3	• Air conditioner is in FAN mode and the number shown is the set fan speed.	• This is normal. The air conditioner is working properly.
FL	• The water collection tank is full.	• Empty the water collection tank. See the Care and Cleaning section.
CH01	• Short or open circuit in the indoor air thermostat.	• Unplug the air conditioner and contact your authorized LG service center.
CH02	• Short or open circuit in the indoor pipe thermostat	• Unplug the air conditioner and contact your authorized LG service center.
CH03	• The difference between Evaporator temperature and indoor temperature is less than 3℃.	• Unplug the air conditioner and contact your authorized LG service center.

LG

Life's Good