LG
Life's Good

OWNER'S MANUAL
使用說明書

VC6820****

P/No.: MFL62699408

www.lg.com

NEW TYPE CYCLONE VACUUM CLEANER

This information contains important instructions for the safe use and maintenance of the vacuum cleaner. Especially, please read all of the information on page 4, 5 for your safety. Please keep this manual in an easily accessible place and refer to it anytime.

新款旋風式吸塵機

本資料包含有關此吸塵機的重要安全操作和維修指示。
爲確保閣下安全，請特別細心閱讀第 6 和第 7 頁的所有資料。
請將此說明書放到容易取得的位置，方便隨時參閱。

Table of contents
目錄表

Important safety instructions ..... **4~5**
重要的安全指示 ..... **6~7**

How to use **8**
使用方法

Assembling vacuum cleaner ..... 8~9
安裝吸塵機

Operating vacuum cleaner 10
操作吸塵機

Using carpet and floor nozzle 11
使用地毯及地板吸塵頭

Using accessory nozzles 12
使用吸塵頭配件

Using the sani punch nozzle ..... 13~17
使用震動 (sani punch) 吸塵頭

Emptying dust tank 18
清空儲塵槽

Cleaning dust tank 19
清潔儲塵槽

Cleaning air filter and motor safety filter 20
清潔空氣過濾器和摩打安全過濾器

Cleaning exhaust filter 21
清潔排氣過濾器

What to do if your vacuum cleaner does not work **22**
吸塵機無法操作時的處理方法

What to do when suction performance decreases **22**
吸塵機吸力下降時的處理方法

IMPORTANT SAFETY INSTRUCTIONS

Read and follow all instructions before using your vacuum cleaner to prevent the risk of fire, electric shock, personal injury, or damage when using the vacuum cleaner. This guide do not cover all possible conditions that may occur. Always contact your service agent or manufacturer about problems that you do not understand. This appliance complies with the following EC Directives : 2006/95/EC Low Voltage Directive 2004/108/EC EMC Directive.



This is the safety alert symbol.
This symbol alerts you to potential hazards that can kill or hurt you and others.
All safety messages will follow the safety alert symbol and either the word “WARNING” or “CAUTION.”
These words mean:

WARNING This symbol will alert you to hazards or unsafe practices which could cause serious bodily harm or death.

CAUTION This symbol will alert you to hazards or unsafe practices which could cause bodily injury or property damage.

WARNING

- **Do not plug in if control switch is not in OFF position.**
  Personal injury or product damage could result.
- **Keep children away and beware of obstructions when rewinding the cord to prevent personal injury**
  The cord moves rapidly when rewinding.
- **Disconnect electrical supply before servicing or cleaning the unit or when cleaner is not in use.**
  Failure to do so could result in electrical shock or personal injury.
- **Do not use vacuum cleaner to pick up anything that is burning or smoking such as cigarettes, or hot ashes.**
  Doing so could result in death, fire or electrical shock.
- **Do not vacuum flammable or explosive substances such as gasoline, benzene, thinners, propane (liquids or gases).**
  The fumes from these substances can create a fire hazard or explosion. Doing so could result in death or personal injury.
- **Do not handle plug or vacuum cleaner with wet hands.**
  Doing so could result in death or electrical shock.
- **Do not unplug by pulling on cord.**
  Doing so could result in product damage or electrical shock. To unplug, grasp the plug, not the cord.
- **Keep hair, loose clothing, fingers, and all parts of the body away from openings and moving parts.**
  Failure to do so could result in electrical shock or personal injury.
- **Do not pull or carry by cord, use cord as a handle, close a door on cord, or pull cord around sharp edges or corners. Do not run vacuum cleaner over cord. Keep cord away from heated surfaces.**
  Failure to do so could result in electrical shock or personal injury or fire or product damage.
- **The hose contains electrical wires. Do not use it if it is damaged, cut or punctured.**
  Failure to do so could result in death,or electrical shock.
- **Do not allow to be used as toy. Close attention is necessary when used by or near children.**
  Personal injury or product damage could result.
- **Do not use the vacuum cleaner if the power cord or plug is damaged or faulty.**
  Personal injury or product damage could result. In these cases, contact LG Electronics Service Agent to avoid hazard.
- **Do not use vacuum cleaner if it has been under water.**
  Personal injury or product damage could result. In these cases, contact LG Electronics Service Agent to avoid hazard.
- **Do not continue to vacuum if any parts appear missing or damaged.**
  Personal injury or product damage could result. In these cases, contact LG Electronics Service Agent to avoid hazard.
- **Do not use an extension cord with this vacuum cleaner**
  Fire hazard or product damage could result.
- **Using proper voltage.**
  Using improper voltage may result in damage to the motor and possible injury to the user. Proper voltage is listed on the bottom of vacuum cleaner.
- **Turn off all controls before unplugging.**
  Failure to do so could result in electrical shock or personal injury.
- **Do not change the plug in any way.**
  Failure to do so could result in electrical shock or personal injury or product damage. Doing so result in death. If plug does not fit, contact a qualified electrician to install the proper outlet.
- **Repairs to electrical appliances may only be performed by qualified service engineers.**
  Improper repairs may lead to serious hazards for the user.

IMPORTANT SAFETY INSTRUCTIONS

⚠ CAUTION

- **Do not put any objects into openings.**
  Failure to do so could result in product damage.
- **Do not use with any opening blocked: keep free of dust, lint, hair, and anything that may reduce air flow.**
  Failure to do so could result in product damage.
- **Do not use vacuum cleaner without dust tank and/or filters in place.**
  Failure to do so could result in product damage.
- **Always clean the dust bin after vacuuming carpet cleaners or fresheners, powders and fine dust.**
  These products clog the filters,reduce airflow and can cause damage to the cleaner. Failure to clean the dust bin could cause permanent damage to the cleaner.
- **Do not use vacuum cleaner to pick up sharp hard objects, small toys, pins, paper clips, etc.**
  They may damage the cleaner or dust bin.
- **Store the vacuum cleaner indoors.**
  Put the vacuum cleaner away after use to prevent tripping over it.
- **The vacuum cleaner is not intended to use by young children or infirm people without supervision.**
  Failure to do so could result in personal injury or product damage.
- **Only use parts produced or recommended by LG Electronics Service Agents.**
  Failure to do so could result in product damage.
- **Use only as described in this manual. Use only with LG recommended or approved attachments and accessories.**
  Failure to do so could result in personal injury or product damage.
- **To avoid personal injury and to prevent the machine from falling when cleaning stairs, always place it at the bottom of stairs.**
  Failure to do so could result in personal injury or product damage.
- **Use accessory nozzles in sofa mode.**
  Failure to do so could result in product damage.
- **Don't grasp the tank handle when you are moving the vacuum cleaner.**
  The vacuum cleaner's body may fall when separating tank and body. Personal injury or product damage could result. **You should grasp the carrier handle** when you are moving the vacuum cleaner.
- **If after emptying the dust tank the indicator light is on(red), clean the dust tank.**
  Failure to do so could result in product damage.
- **Make sure the filters (exhaust filter and motor safety filter) are completely dry before replacing in the machine.**
  Failure to do so could result in product damage.
- **Do not dry the filter in an oven or microwave.**
  Failure to do so could result in fire hazard.
- **Do not dry the filter in a clothes dryer.**
  Failure to do so could result in fire hazard.
- **Do not dry near an open flame.**
  Failure to do so could result in fire hazard.
- **If the power cord is damaged, it must be replaced by an approved LG Electronics Service Agent to avoid a hazard.**
- **This appliance is not intended for use by persons (including children) with reduced physical, sensory or mental capabilities, or lack of experience and knowledge, unless they have been given supervision or instruction concerning use of the appliance by a person responsible for their safety.**
  Children should be supervised to ensure that they do not play with the appliance.

Thermal protector :

This vacuum cleaner has a special thermostat that protects the vacuum cleaner in case of motor overheating.
If the vacuum cleaner suddenly shuts off, turn off the switch and unplug the vacuum cleaner.
Check the vacuum cleaner for possible source of overheating such as a full dust tank, a blocked hose or clogged filter.
If these conditions are found, fix them and wait at least 30 minutes before attempting to use the vacuum cleaner.
After the 30 minute period, plug the vacuum cleaner back in and turn on the switch.
If the vacuum cleaner still does not run, contact a qualified electrician.

重要安全指示

使用吸塵機前，請務必細閱並遵從指示，以免使用吸塵機時釀成火警、觸電、受傷或損壞。
本說明書可能未能涵蓋一切有可能發生的狀況。 如有任何疑問，請與您的服務代理商或製造商聯絡。
此電器符合 EC 指令：-2006/95/EC 低壓指令 -2004/108/EC EMC 指令



這是安全警告標誌。
這個標誌警告您要注意有可能對您或他人造成傷害或死亡的潛在危險。
所有安全訊息皆附有安全警告標誌及「警告」或「小心」字眼。
這些字眼代表：

警告 這個標誌警告您要注意有可能造成嚴重身體創傷或死亡的危險或不安全舉動。

小心 這個標誌警告您要注意有可能導致受傷或物件損壞的危險或不安全舉動。

警告

- **如開關鈕並非在 「關」 的位置，千萬不要插上電掣。**
  這樣可能會引致受傷或令產品損壞。
- **電線回捲時，必須遠離小童並留意障礙物，以免受傷。**
  電線回捲的速度很高。
- **維修或清潔吸塵機之前，或不使用吸塵機時，請務必中斷電源。**
  否則可能會導致觸電或受傷。
- **切勿使用吸塵機吸除任何正在燃燒或冒煙的物件，例如煙蒂或高溫的煙灰。**
  否則可能會造成人命死亡、火警或觸電。
- **切勿使用吸塵機吸除易燃或爆炸性物品，例如汽油、苯、天拿水、丙烷（液態或氣體)。**
  這些物品的煙霧可能會釀成火警或爆炸。 這樣可能會造成人命死亡或受傷。
- **雙手沾水時，切勿觸碰插頭或吸塵機。**
  否則可能會造成人命死亡或觸電。
- **切勿透過拉扯電線以拔除插頭。**
  否則可能會導致產品損壞或觸電。 拔除插頭時，應該抓住插頭，而非電線。
- **頭髮、寬鬆的衣服、手指以及所有身體部分必須遠離吸塵機的開口及活動機件。**
  否則可能會導致觸電或受傷。
- **切勿藉著拉扯電線以拉動或提起吸塵機，將電線作爲把手，關門時夾著電線，或讓電線在尖銳的邊緣或尖角上磨擦。 切勿讓吸塵機在電線上輾過。 使電線遠離受熱的表面。**
  否則可能會導致觸電、受傷、火災或產品損壞。
- **膠管內含電線。**
  如膠管損毀、被割開或被刺穿，則千萬不要使用。
  否則可能會造成人命死亡或觸電。
- **切勿把玩吸塵機。 當兒童使用吸塵機時，或使用時有兒童在旁，必須加倍留神。**
  這樣可能會引致受傷或令產品損壞。
- **吸塵機的電線或插頭損壞或失靈時，切勿使用吸塵機。**
  這樣可能會引致受傷或令產品損壞。
  遇到這些情況，請與 LG 電子產品服務代理商聯絡，以免造成危險。
- **切勿使用曾被放進水中的吸塵機。**
  這樣可能會引致受傷或令產品損壞。
  遇到這些情況，請與 LG 電子產品服務代理商聯絡，以免造成危險。
- **如任何部件看似有所缺少或損壞，則切勿繼續吸塵。**
  這樣可能會引致受傷或令產品損壞。
  遇到這些情況，請與 LG 電子產品服務代理商聯絡，以免造成危險。
- **此吸塵機不可使用延長電線。**
  否則可能會引起火警或令產品損壞。
- **使用適當電壓。**
  如電壓不當，可能會令摩打損壞並導致使用者受傷。
  吸塵機的底部已印有適當的電壓。
- **拔除插頭前，必須關掉所有的控制鍵。**
  否則可能會引致觸電或受傷。
- **切勿以任何方式轉換插頭。**
  否則可能會引致觸電、受傷或產品損壞，從而導致死亡。如插頭不合適，請聯絡合資格的電工安裝適當的插座。
- **只有合資格的維修技師才可維修電器。**
  維修不當或會對使用者造成嚴重的事故。

重要安全指示

⚠ 小心

- **切勿把任何物件放進開口。**
  否則會令產品損壞。
- **吸塵機的任何開口被阻塞時，切勿使用吸塵機：確保開口沒有塵埃、纖維屑、毛髮或其他或會阻礙空氣流動的物品。**
  否則會令產品損壞。
- **沒有安裝好儲塵槽及／或過濾器前，切勿使用吸塵機。**
  否則會令產品損壞。
- **使用吸塵機吸除地毯清潔劑或清新劑、粉末及細小的塵粒後，必須清理儲塵槽。**
  這些東西會阻塞過濾器並減少空氣流動，可能令吸塵機損毀。 不清理儲塵槽可能會對吸塵機構成永久損害。
- **切勿使用吸塵機吸除尖銳而且堅硬的物件、細小的玩具、針、萬字夾等等。**
  這些物件或會損壞吸塵機或儲塵槽。
- **將吸塵機存放於室內。**
  使用後請將吸塵機存放好，以免絆倒。
- **此吸塵機不適合小孩或體弱病患者在沒有監管的情況下使用。**
  否則會引致受傷或令產品損壞。
- **只可使用 LG 電子產品服務代理商生產或建議使用的零部件。**
  否則會令產品損壞。
- **必須依照本說明書的指示使用吸塵機。**
  只可使用 LG 建議或認可的附件及配件。
  否則會引致受傷或令產品損壞。
- **爲免導致受傷及吸塵機在清潔梯級時掉下來，務必將吸塵機放在樓梯的底部。**
  否則會引致受傷或令產品損壞。
- **使用配件吸塵頭時需調校至梳化模式。**
  否則會令產品損壞。
- **移動吸塵機時，切勿握著儲塵槽的手柄。**
  如吸塵機的儲塵槽和機身分離，可能會令機身掉下來。這樣可能會引致受傷或令產品損壞。
  移動吸塵機時，必須緊握手挽。
- **清空儲塵槽後如亮起指示燈(紅色)，請清洗儲塵槽。**
  否則會令產品損壞。
- **確保過濾器(排氣過濾器和摩打安全過濾器）放到吸塵機之前，已完全乾透。**
  否則會令產品損壞。
- **切勿把過濾器放進焗爐或微波爐弄乾。**
  否則會引起火警。
- **切勿把過濾器放進乾衣機弄乾。**
  否則會引起火警。
- **切勿放到明火附近弄乾。**
  否則會引起火警。
- **如電線損壞，必須由得到認可的 LG 電子產品服務代理商替換電線，以免造成意外。**
- **不建議此產品讓生理或心智能力較低的人(包括小童)，或缺乏經驗或知識的人使用，除非他們得到負責他們安全的人士監督或指示下使用。.**
  請看管小孩，確保他們不會把玩吸塵機。

溫度保護器：

此吸塵機特別設有溫度調節器，保護吸塵機以免因爲摩打過熱而受損。

如吸塵機突然關機，請把開關關掉，然後拔除吸塵機的插頭。

請檢查吸塵機有可能的過熱源頭，例如儲塵槽是否已滿，膠管和過濾器有否被堵塞。

如果出現上述情況，請加以修正，並最少等待 30 分鐘後才再次使用吸塵機。

30 分鐘後，請爲吸塵機駁回電源，然後啟動開關。

如果吸塵機仍無法運作，請聯絡合資格的電工。

How to use Assembling vacuum cleaner
使用方法 安裝吸塵機

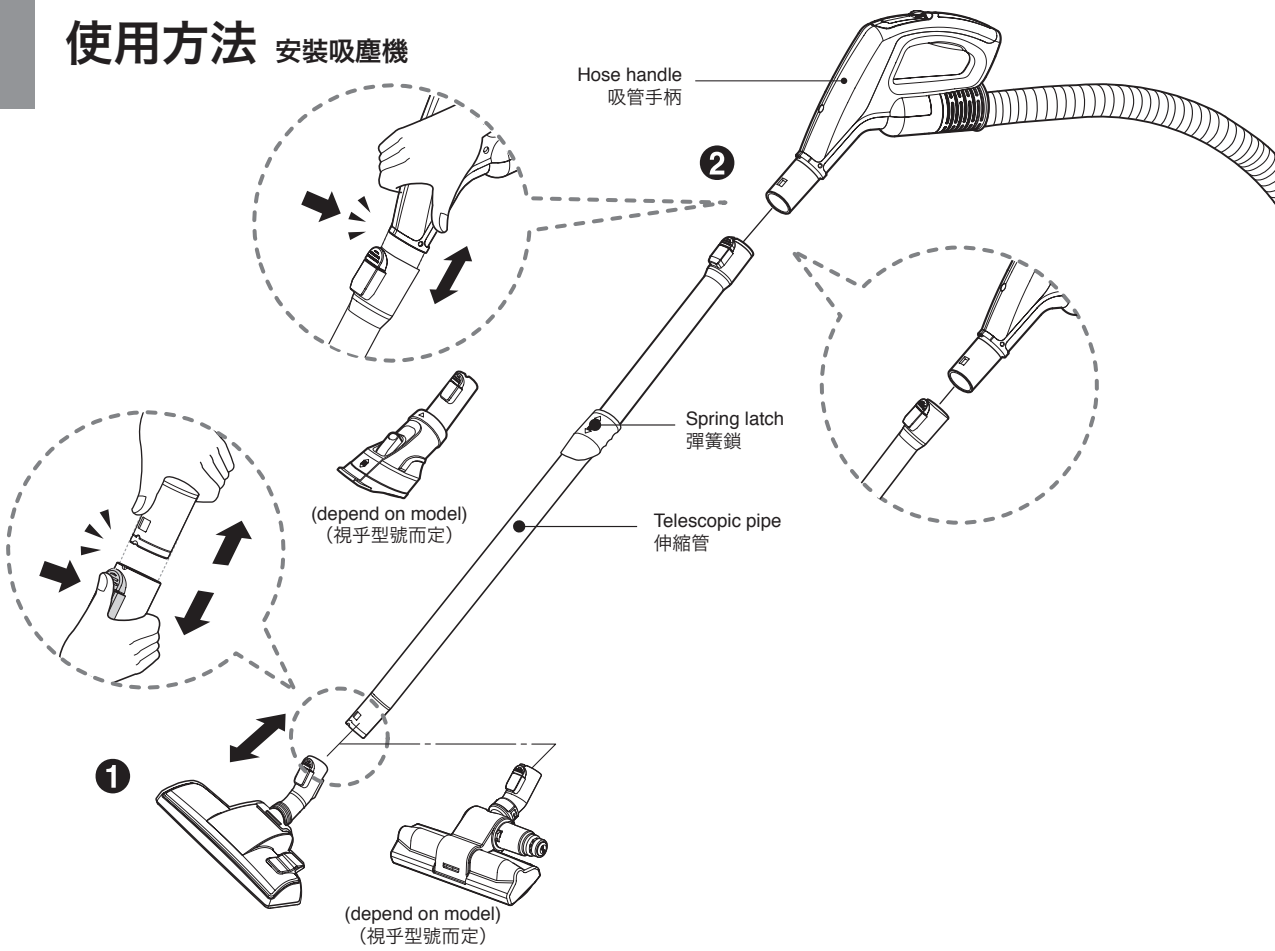

❶ Carpet and floor nozzle
地毯及地板吸塵頭

Push the nozzle into the telescopic pipe.

將吸塵頭推入伸縮管。

❷ Telescopic pipe
伸縮管

- Push telescopic pipe firmly into hose handle.
- Grasp the spring latch to expand.
- Pull out the pipe to desired length.

・將伸縮管穩固地進入吸管手柄。
・緊握彈簧鎖，把伸縮管拉長。
・將伸縮管拉出至所需長度。

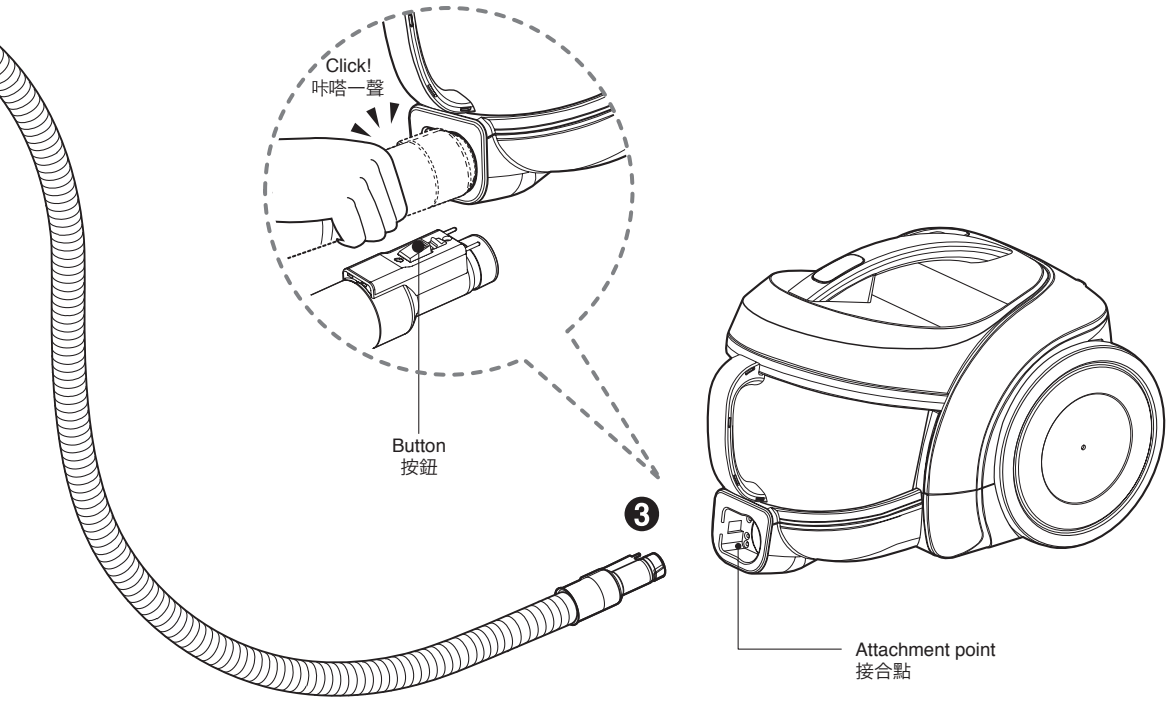

❸ Connecting the hose to the vacuum cleaner
連接膠管到吸塵機

Push the fitting pipe on the flexible hose into the attachment point on the vacuum cleaner. To remove the flexible hose from the vacuum cleaner, press the button situated on the fitting pipe, then pull the fitting pipe out of the vacuum cleaner.

將軟管上的管件插進吸塵機的接合點。
若要拆除吸塵機的軟管，請按下管件上的按鈕，
然後將管件從吸塵機拉出便可。

How to use Operating vacuum cleaner
使用方法 操作吸塵機

❶

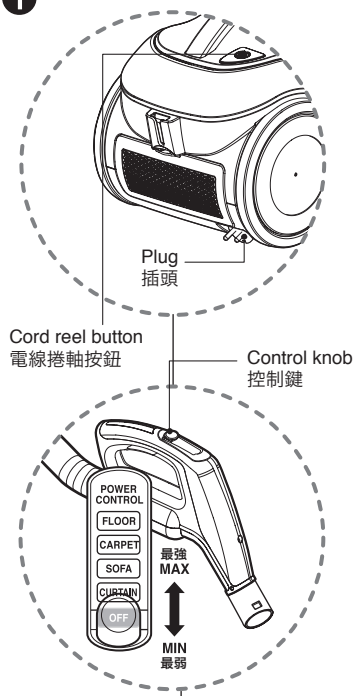

❷

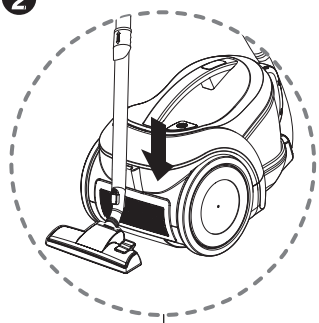

❸

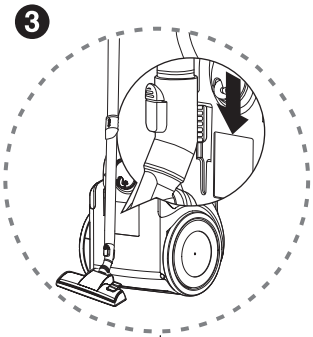

❶ How to operate 操作方法

- Pull out the power cord to the desired length and plug into the socket.
- Place the control knob of the hose handle to the required position.
- To turn off, slide control knob to OFF position.
- Press the cord reel button to rewind the power cord after use.

- 把電線拉出至所需長度，然後將插頭插入電源插座。
- 將吸管手柄的控制鈕調校至所需位置。
- 如要關機，請將控制鈕移到「關」(OFF) 的位置。
- 使用吸塵機後，請按下電線捲軸按鈕將電線捲回。

❷ Park mode 停放模式

- To store during vacuuming, for example to move a small piece of furniture or a rug, use park mode to support the flexible hose and nozzle.
  - Slide the hook on the nozzle into the slot on the side of vacuum cleaner.

- 如要暫停吸塵，例如要移動傢俱或地毯，請使用停放模式支撐軟管和吸塵頭。
  - 將吸塵頭的小勾掛在吸塵機旁的插槽上。

❸ Storage 存放

- When you have switched off and unplugged the vacuum cleaner, press the cord reel button to automatically rewind the cord.
- You can store your vacuum cleaner in a vertical position by sliding the hook on the nozzle into the slot on the underside of the vacuum cleaner.

- 關掉吸塵機並拔除插頭後，按下電線捲軸按鈕就會自動捲回電線。
- 您可將吸塵頭的小勾卡在吸塵機底部的插槽上，以垂直方式存放吸塵機。

How to use Using carpet and floor nozzle
使用方法 使用地毯及地板吸塵頭

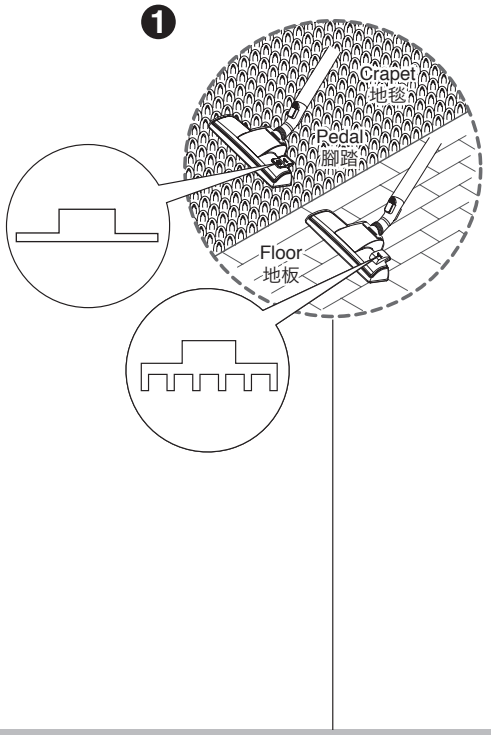

❶ Carpet and floor nozzle
地毯及地板吸塵頭

- **The 2 position nozzle**
  This is equipped with a pedal which allows you to alter its position according to the type of floor to be cleaned.
- **Carpet or rug position**
  press the pedal to lift the brush up.
- **Hard floor position** (tiles, parquets floor)
  press the pedal to lower brush.

- **兩用吸塵頭**
  吸塵頭設有腳踏，讓您因應需要清潔的地板種類而調校位置。
- **地毯或墊子位置**
  按下腳踏，縮起刷子。
- **硬地板位置**
  按下腳踏，放下刷子。

How to use Using accessory nozzles
使用方法 使用吸塵頭配件

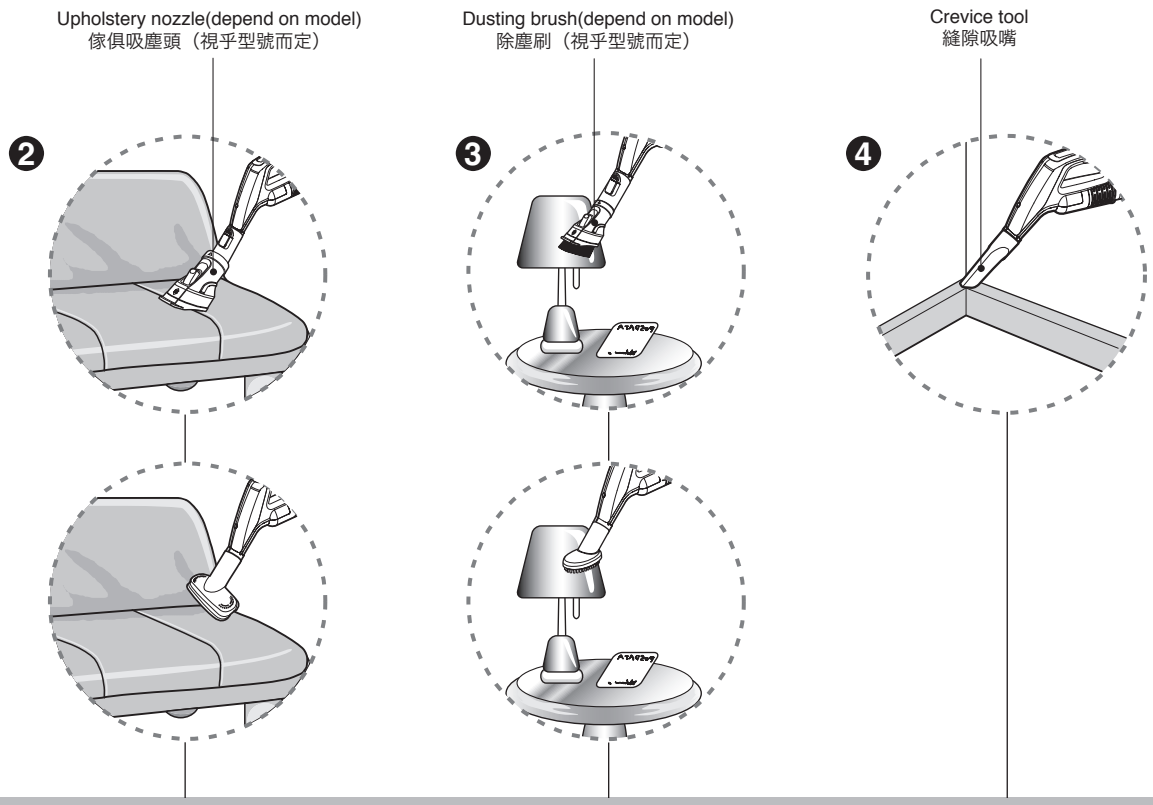

❷ Upholstery nozzle 傢俱吸塵頭

Upholstery nozzle is for vacuuming upholstery, mattresses, etc.

傢俱吸塵頭用於吸除傢俱、床褥等等的塵埃。

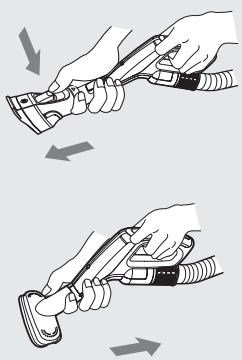

❸ Dusting brush 除塵刷

Dusting brush is for vacuuming picture frames, furniture frames, books and other irregular surfaces.

除塵刷用於去除照相架、傢俱支架、書籍及其他不規則形狀表面的塵埃。

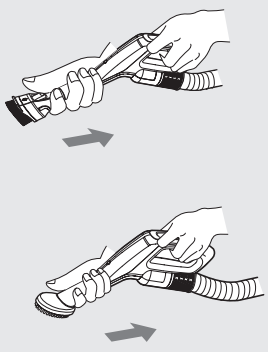

❹ Crevice tool 縫隙吸嘴

Crevice tool is for vacuuming in those normally hard-to-reach places such as reaching cobwebs, or between the cushions of a sofa.

縫隙吸嘴用以清理一般難以觸及的地方，例如結有蜘蛛網或梳化坐墊之間的縫隙。

NOTICE, 注意

Use accessory in the sofa mode

使用配件時需調校至梳化模式。

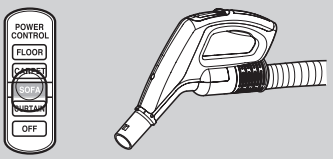

How to use Using the sani punch nozzle
使用方法 使用震動 (sani punch) 吸塵頭

Features
This nozzle picks up even dust inside through beating.
The bottom part can be separated to be cleaned.
Since the bottom does not stick to the surface, vacuuming is easy.

功能
此吸塵頭能夠透過拍打，吸走最細微、藏於裡面的塵埃。
其底部可分拆出來清洗。
由於底部不會黏著床舖表面，吸塵起來十分方便。

How to use
Follow the directions below for proper use.

使用方法
請按照以下指引，確保使用方法正確。

Assembly
Connect the nozzle to the telescopic tube.

裝嵌
將吸塵頭連接至伸縮管。

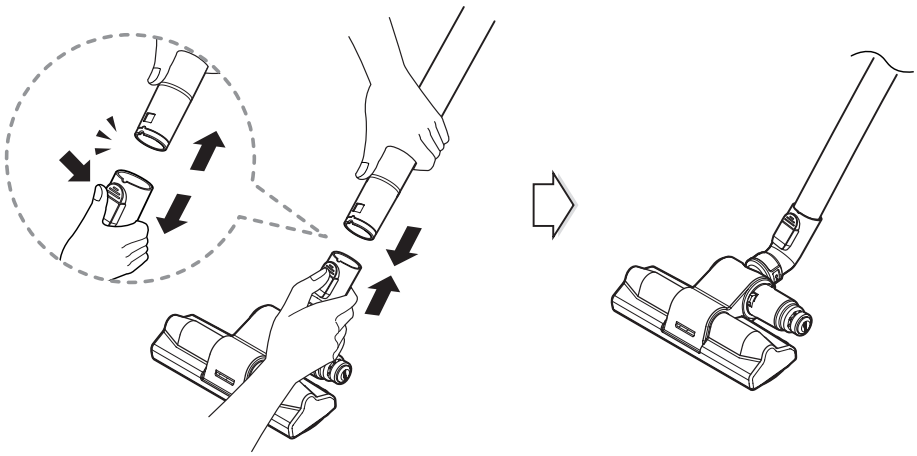

Sani punch nozzle (depending on model)
震動 (sani punch) 吸塵頭

Set the suction power control switch to MAX POWER before vacuuming.
Depending on the type of bedding, handling may be awkward or it may cause a lot of noise.
If this is the case, adjust the suction power control switch to a lower setting.

吸塵前，請將吸力強度控制鈕調至最強 (MAX POWER)。
使用時可能不易處理或會發出不少噪音，這視乎床舖種類而定。
遇到這種情況，請將吸力強度控制鈕調校至較低水平。

This Sani Punch nozzle is for effective cleaning of beds and blankets to remove mites and dust.
此衛生拍打吸塵頭能去除螨蟲和塵埃，對清潔睡床和氈子十分有效。

Effective cleaning
有效清潔

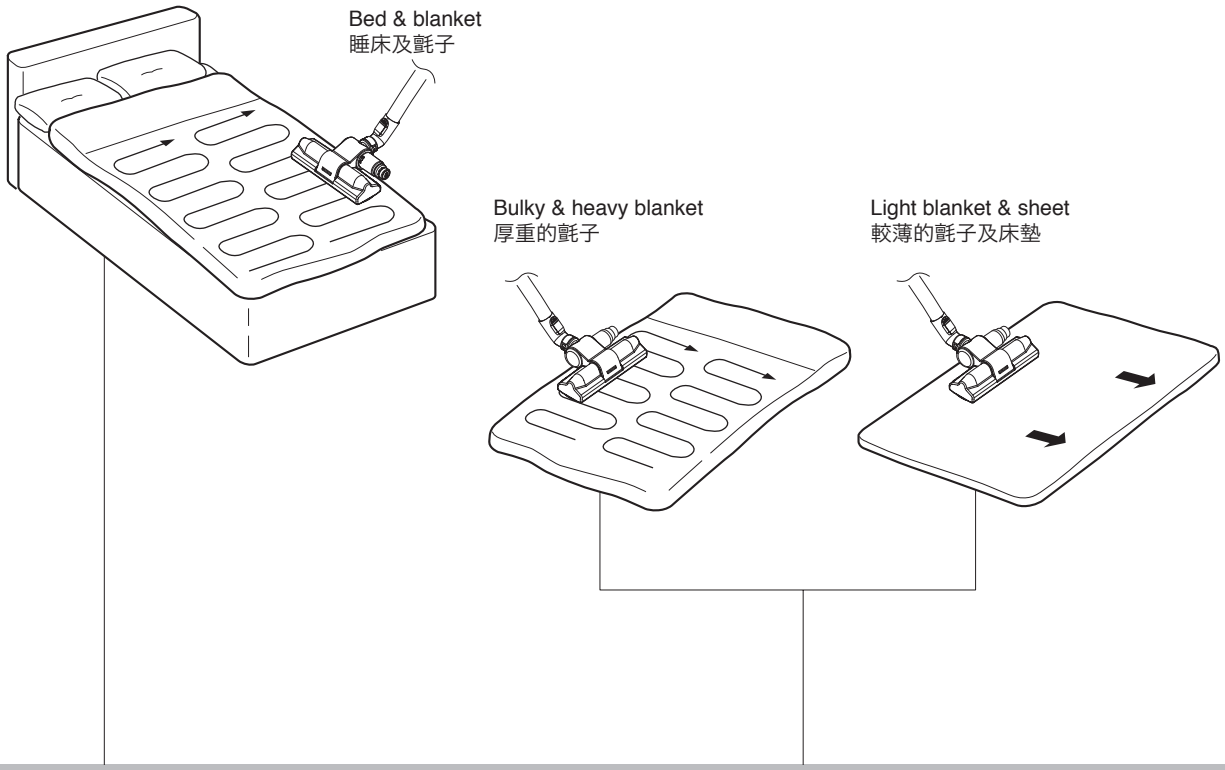

When using on the bed
在睡床上使用時

Lay out the blanket and vacuum it on the bed

把氈子鋪在床上，然後在床上吸塵。

When using on the floor
在地板上使用時

It is easier to clean a light blanket or sheet
by pushing the nozzle in the direction of the arrow.
To increase cleaning efficiency for light blankets,
lay on top of a bulky blanket and then clean.

清潔較薄的氈子或床鋪時，將吸塵頭沿著圖中箭咀所示的方向推進會比較容易。
清潔較薄的氈子時，如鋪在較厚的氈子上面，清潔效果會更佳。

For simple cleaning of the vacuum nozzle, detach the Sani Punch nozzle from the telescopic tube and attach the crevice tool to vacuum dust.
如要簡單地清潔吸塵頭，可拆除伸縮管的震動吸塵頭，然後換上縫隙吸嘴即可反轉底部吸塵清潔。

Top
頂部

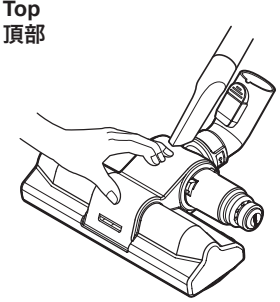

Bottom
底部

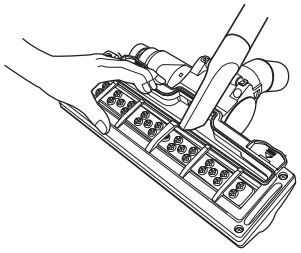

Since the vibrator inside is composed of precision parts, never disassemble the body.
Be careful not to let foreign objects clog the air suction part on top of the vacuum nozzle.
Since removal of the punch bar may cause performance problems, do not warp or remove it.
Attach the bottom plate properly before using. Without this bottom plate, it may not function.

由於吸塵頭裡面的震動裝置由細小的零件組成，故切勿拆開吸塵頭。
小心別要讓外物堵塞吸塵頭頂部的吸氣位置。
移去拍打器會導致性能下降，請不要包裹或去除拍打器。
使用前，請妥當地安裝底板。沒有底板，則可能無法運作。

Since this vacuum nozzle has been made exclusively for cleaning beds, blankets and upholstery, use it only for these cleaning purposes.
(Using it to clean the floor may result soiling it or a drop in performance, do not use it for such purposes.)

由於此吸塵頭乃專爲清潔睡床、氈子和傢俱而設，因此只可作上述用途。
(使用此吸塵頭清潔地板可能會使它弄髒或導致性能下降，所以不可將它用於這些用途。)

Follow the instruction below for through washing.
(Do not soak the entire body of the vacuum nozzle in water, it may cause the vibrator to malfunction)
依照以下指示，徹底地清洗吸塵頭。
(切勿將整個吸塵頭浸在水中，否則會令震動器失靈。)

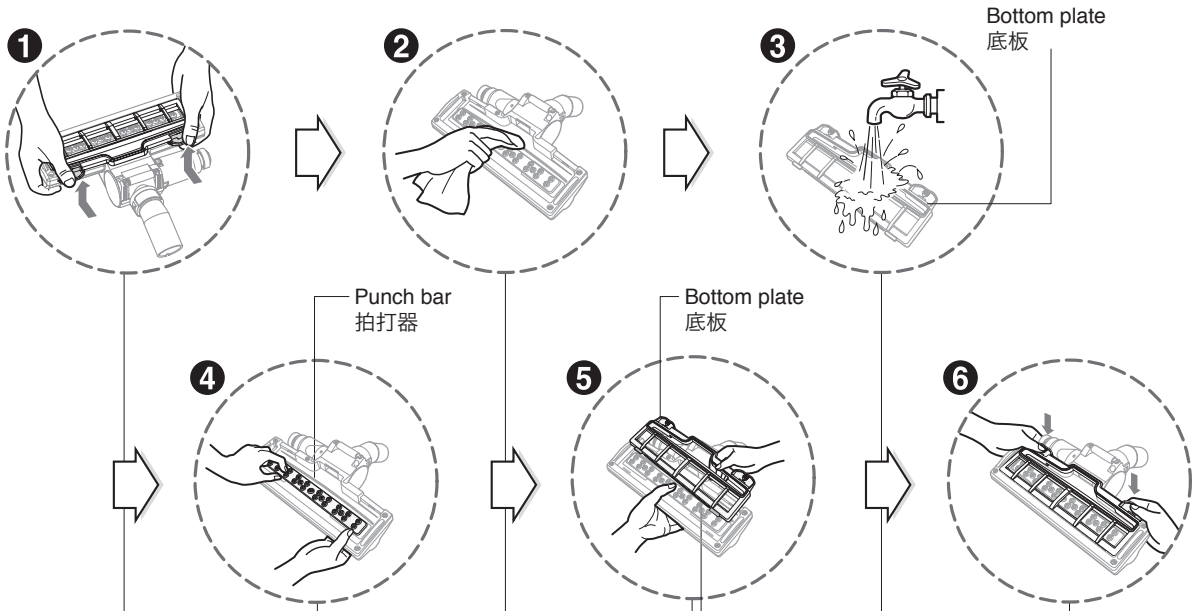

❶ Press the button on the rear side of the vacuum nozzle to separate the bottom plate.

❶ 按下吸塵頭背部的按鈕，拆開底板。

❷ Wipe all the soiled parts of the vacuum nozzle body with a cloth.

❷ 用布抹去吸塵頭所有骯髒的地方。

❸ Wash the removed bot-tom plate with water and dry it.

❸ 用水清洗剛才已拆除的底板，然後抹乾。

❹ Straighten the punch bar on the lower section.

❹ 將下半部分的拍打器放直。

❺ Insert the attachment projections on bottom plate to the vacuum nozzle grooves.

❺ 將底板突起部插進吸塵頭的凹位。

❻ Push down the tabs to secure.

❻ 按下推板以固定位置。

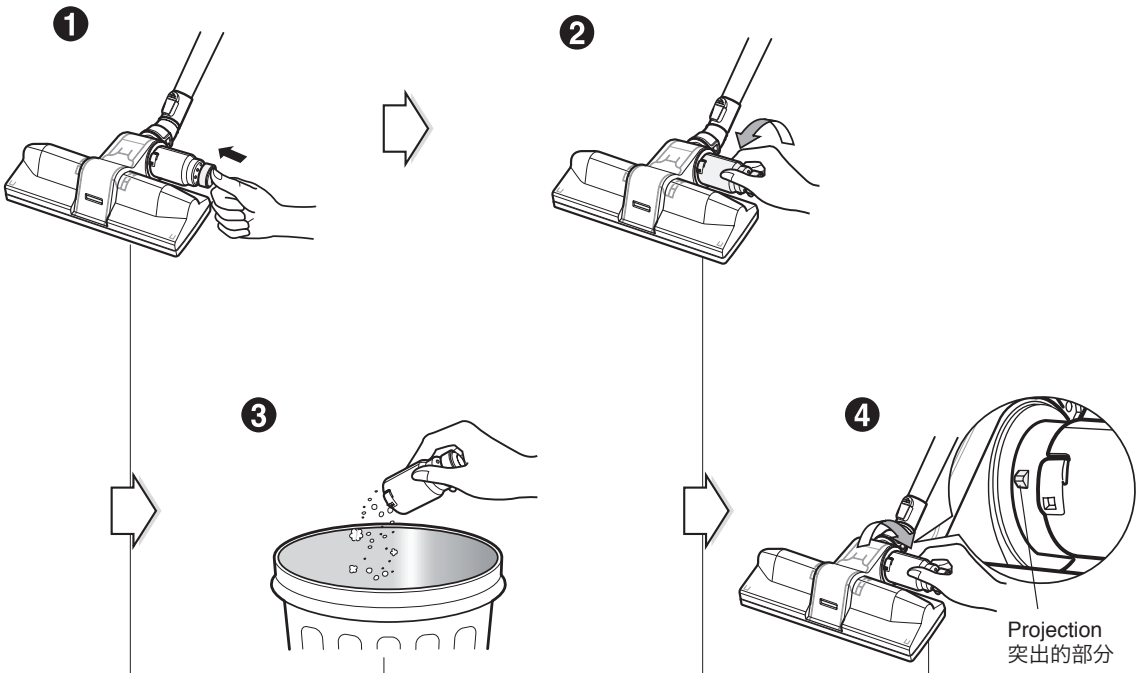

❶ Push the button 2-3 times when the dust is filled in the dustbin while cleaning

❶ 清潔期間當塵埃儲到儲塵槽時，按下按鈕 2-3 次。

❷ When the dust is fully filled after cleaning, take the bin and turn it counterclockwise to disconnect

❷ 清潔後當儲滿塵埃時，請握著儲塵槽，以逆時針方向拆除儲塵槽。

❸ Waste the dust in the bin

❸ 倒出儲塵槽中的塵埃。

❹ Take the bin to fix into the projection part and then turn it clockwise to connect.

❹ 將儲塵槽對準突出來的部分，然後以順時針方向連接好。

How to use Emptying dust tank
使用方法 清空儲塵槽

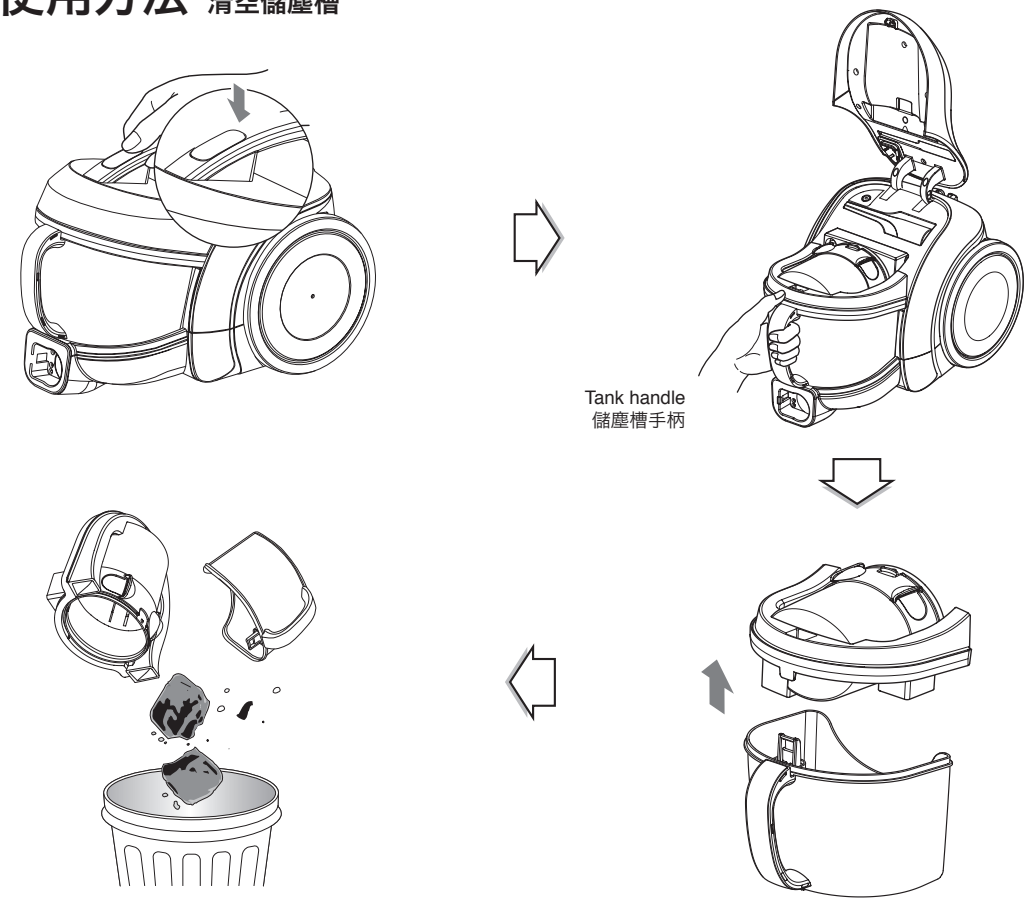

Cleaning the dust “tank”
- Open the tank cap.
- Wash both parts with soft material. Gently rinse both parts under a cold running tap.

清潔儲塵槽。
- 打開儲塵槽的蓋子。
- 以柔軟的物料清洗儲塵槽的兩個部分。將這兩個部分放在水龍頭下，以冷水溫和地沖洗。

⚠ WARNING!
Gently rinse both parts separately under a cold running tap until the water runs clear.
Do not use detergent or a washing machine or dishwasher.

⚠ 警告！
將這兩個部分放在水龍頭下，以冷水溫和地沖洗，直至清洗的水變得清澈爲止。
切勿使用清潔劑、洗衣機或洗碗機清洗吸塵機。.

- Place the control knob of rear cover to the requeired position.
- 請將背蓋的控制鈕調校至所需位置。

Caution: Do not push the cover open button when you carry the vacuum cleaner.
If the cover opens, it is easy to detach the dust tank from the vacuum cleaner.

小心: 正在提起吸塵機時，切勿按下打開蓋子的按鈕。
如果蓋子打開，儲塵槽會容易與吸塵機分離。

How to use Cleaning dust tank
使用方法 清潔儲塵槽

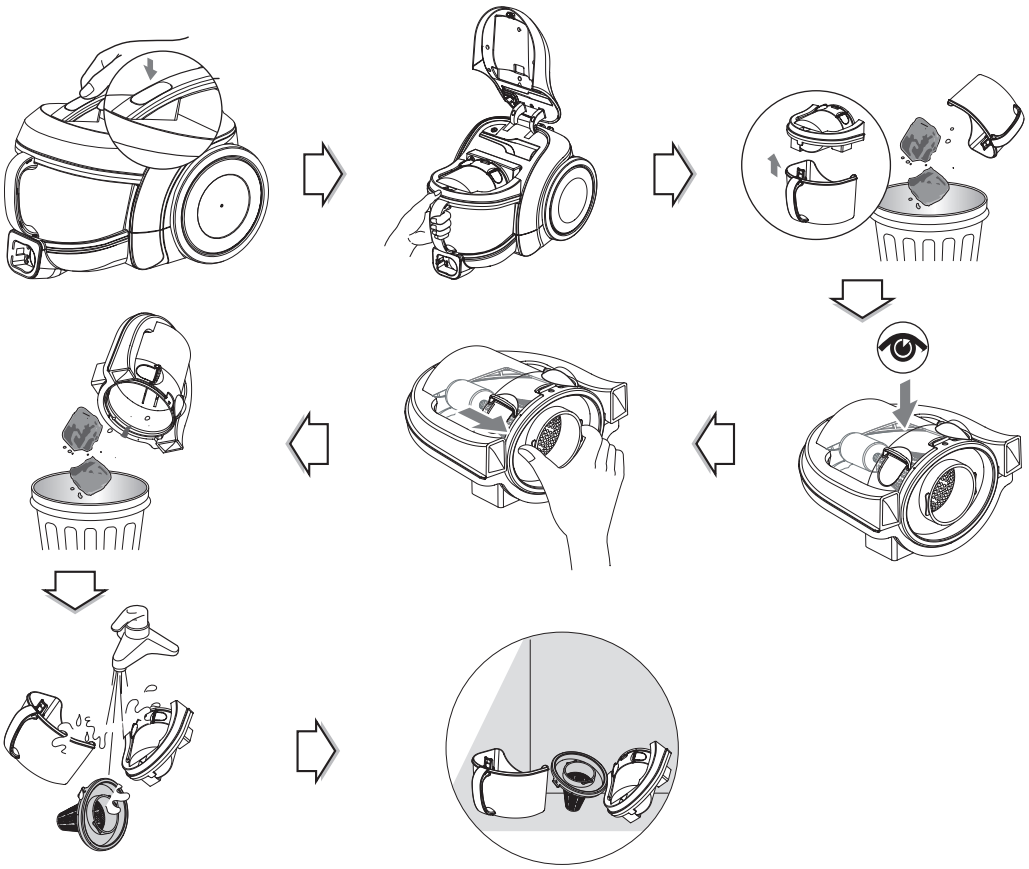

- Open cover with pushing button and pull out dust tank.
- Raise dust tank cap
- Dry fully in shade so that moisture is entirely removed.

- 按下按鈕以打開蓋子，然後把儲塵槽拉出。
- 提起儲塵槽的蓋子
- 清洗後，放到陰涼的地方，讓水分徹底蒸發，直到完全乾透為止。

NOTICE

If suction power decreases after cleaning dust tank, clean air filter and motor safety filter. ➜ Next page

注意

如清洗儲塵槽後發現吸塵機的吸力減弱，請清洗空氣過濾器和摩打安全過濾器。 ➜ 下一頁

How to use Cleaning air filter and motor safety filter
使用方法 清潔空氣過濾器和摩打安全過濾器

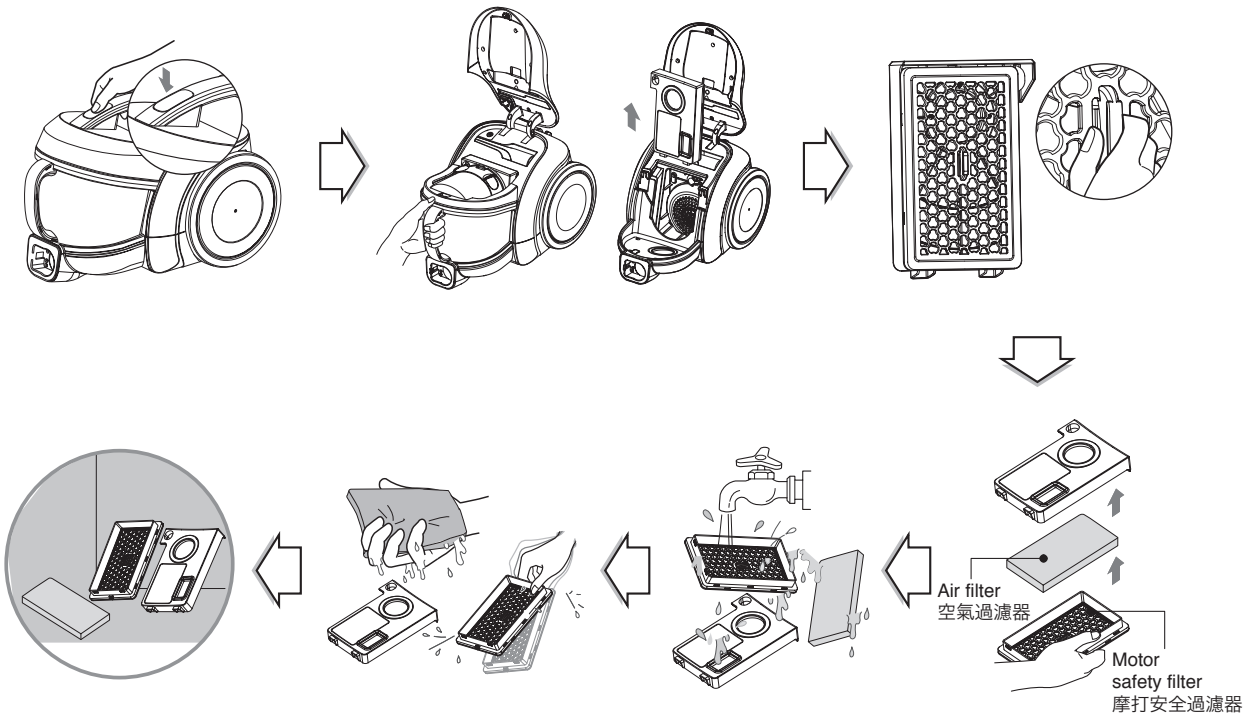

If suction power is decreased after cleaning dust tank, clean air filter and motor safety filter. Air filter and motor safety filter are located at the center of vacuum cleaner in the above figure.

- Open the air filter cover by pulling the air filter cover lever and take out air filter.
- Separate the parts
- Wash air filter and motor safety filter with water.
- Do not wash filters with hot water.
- Dry fully in shade so that moisture is entirely removed.
- Air filter and motor safety filter should be cleaned in the above case.

NOTICE

If filters are damaged, do not use them.
In this cases, contact LG Electronics Service Agent.

如清洗儲塵槽後發現吸塵機的吸力減弱，或亮起指示燈，請清洗空氣過濾器和摩打安全過濾器。
空氣過濾器和摩打安全過濾器位於吸塵機的頂部位置，如上圖所示。

- 拉出空氣過濾器蓋子上的手柄，就可打開空氣過濾器的蓋子，然後取出空氣過濾器。
- 拆開部件。
- 用清水洗淨空氣過濾器及摩打安全過濾器。
- 切勿用熱水清洗過濾器。
- 清洗後，放到陰涼的地方，讓水分徹底蒸發，直到完全乾透為止。
- 空氣過濾器和摩打安全過濾器必須如上圖所示般清洗。

注意

如果過濾器損壞，則千萬不要使用。
遇到這種情況，請與 LG 電子產品服務代理商聯絡。

How to use Cleaning exhaust filter
使用方法 清潔排氣過濾器

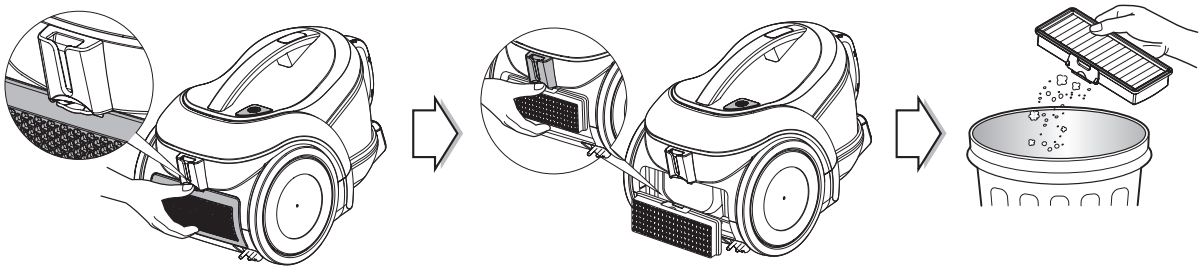

- The exhaust filter is a reusable HEPA filter.
- To change the exhaust filter, remove the filter cover on the body by release hook.
- Pull out the exhaust filter.
- Dust off filter.(Do not wash filter with water.)
- The exhaust filter should be cleaned at least once a year.

- 排氣過濾器是可循環再用的高效空氣過濾器 (HEPA)。
- 如要更換排氣過濾器，請釋放小勾，然後移去機身上面的過濾器蓋子。
- 拉出排氣過濾器。
- 除去過濾器上的塵埃。（切勿用水清洗過濾器。）
- 排氣過濾器必須最少每年清潔一次。

What to do if your vacuum cleaner does not work
吸塵機無法操作時的處理方法

Check that the vacuum cleaner is plugged in correctly and that the electrical socket is working.
請檢查吸塵機是否已正確地插上電掣，電源插座是否運作正常。

What to do when suction performance decreases
吸塵機吸力減弱時的處理方法

- Turn off the vacuum cleaner and unplug it.
- Check the telescopic pipe, flexible hose and cleaning tool for blockages or obstructions.
- Check that the dust tank is not full. Empty if necessary.
- Check that the exhaust filter is not clogged. Clean the exhaust filter if necessary.
- Check that the air filter is not clogged. Clean the air filter if necessary.

- 關掉吸塵機，然後拔除插頭。
- 檢查伸縮管、軟管及清潔工具有否堵塞或有障礙物。
- 查檢儲塵槽是否已滿。如有需要，請清空儲塵槽。
- 檢查排氣過濾器沒有阻塞。如有需要，請清潔排氣過濾器。
- 檢查空氣過濾器有否堵塞。如有需要，請清潔空氣過濾器。

Note
注意



Made in Korea