LG
Life's Good

ENGLISH

OWNER'S MANUAL

Portable DVD Player

Please read this manual carefully before operating your set and retain it for future reference.

MODEL
DP582B

P/NO : MFL63727808

Safety Precaution

CAUTION

RISK OF ELECTRIC SHOCK DO NOT OPEN

CAUTION: TO REDUCE THE RISK OF ELECTRIC SHOCK. DO NOT REMOVE COVER (OR BACK). NO USER-SERVICEABLE PARTS INSIDE. REFER SERVICING TO QUALIFIED SERVICE PERSONNEL.

This lightning flash with arrowhead symbol within an equilateral triangle is intended to alert the user to the presence of uninsulated dangerous voltage within the product's enclosure that may be of sufficient magnitude to constitute a risk of electric shock to persons.

The exclamation point within an equilateral triangle is intended to alert the user to the presence of important operating and maintenance (servicing) instructions in the literature accompanying the product.

WARNING: TO PREVENT FIRE OR ELECTRIC SHOCK HAZARD, DO NOT EXPOSE THIS PRODUCT TO RAIN OR MOISTURE.

WARNING: Do not install this equipment in a confined space such as a book case or similar unit.

CAUTION: Do not block any ventilation openings. Install in accordance with the manufacturer's instructions. Slots and openings in the cabinet are provided for ventilation and to ensure reliable operation of the product and to protect it from over heating. The openings shall be never be blocked by placing the product on a bed, sofa, rug or other similar surface. This product shall not be placed in a built-in installation such as a bookcase or rack unless proper ventilation is provided or the manufacturer's instruction has been adhered to.

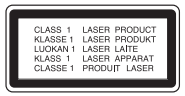

CAUTION: This product employs a Laser System. To ensure proper use of this product, please read this owner's manual carefully and retain it for future reference. Shall the unit require maintenance, contact an authorized service centre. Use of controls, adjustments or the performance of procedures other than those specified herein may result in hazardous radiation exposure. To prevent direct exposure to laser beam, do not try to open the enclosure. Visible laser radiation when open. DO NOT STARE INTO BEAM.

CAUTION: The apparatus shall not be exposed to water (dripping or splashing) and no objects filled with liquids, such as vases, shall be placed on the apparatus.

CAUTION

- The ventilation shall not be impeded by covering the ventilation openings with items, such as newspapers, table-cloth, curtains etc.
- No naked flame sources, such as lighted candles, shall be placed on the apparatus.
- Used batteries shall be disposed of safely and not incinerated. Attention shall be shown to the environment aspects of battery disposal.
- The excessive sound pressure from earphones and headphones can cause hearing loss.
- The battery shall not be exposed to excessive heat such as sunshine, fire or the like.
- Do not remove the battery incorporated with product for your safety.
  If you need to replace the battery, take it to the nearest authorized LG Electronics service point or dealer for assistance

CAUTION concerning the Power Cord
Most appliances recommend they be placed upon a dedicated circuit;

That is, a single outlet circuit which powers only that appliance and has no additional outlets or branch circuits. Check the specification page of this owner's manual to be certain. Do not overload wall outlets. Overloaded wall outlets, loose or damaged wall outlets, extension cords, frayed power cords, or damaged or cracked wire insulation are dangerous. Any of these conditions could result in electric shock or fire. Periodically examine the cord of your appliance, and if its appearance indicates damage or deterioration, unplug it, discontinue use of the appliance, and have the cord replaced with an exact replacement part by an authorized service centre. Protect the power cord from physical or mechanical abuse, such as being twisted, kinked, pinched, closed in a door, or walked upon. Pay particular attention to plugs, wall outlets, and the point where the cord exits the appliance.To disconnect power from the mains, pull out the mains cord plug. When installing the product, ensure that the plug is easily accessible.

This device is equipped with a portable battery or accumulator.
Safe way to remove the battery or the battery from the equipment:
Remove the old battery pack, follow the steps in reverse order than the assembly. To prevent contamination of the environment and bring on possible threat to human and animal health, the old battery or the battery put in the appropriate container at designated collection points. Do not dispose of batteries or battery together with other waste. It is recommended that you use local, free reimbursement system batteries and accumulators.

Warning for replaceable lithium battery

- Danger of explosion if battery incorrectly replaced.
- Replace only with the same type battery.
- Additional warning marking close to the battery if intended to be replaced by users.

Manufactured under license from Dolby Laboratories. Dolby and the double-D symbol are trademarks of Dolby Laboratories.

"DVD Logo" is a trademark of DVD format/Logo Licensing Corporation.

DivX is a registered trademark of DivX, Inc., and is used under license.

- The appliance is not intended for use by young children or infirm persons without supervision.
- Young Children shall be supervised to ensure that they do not play with appliance.
- If the appliance is supplied from a cord extension set or an electrical portable outlet device, the cord extension set on electrical portable outlet device must be positioned so that it is not subject to splashing or ingress of moisture.

Introduction

About the ⊘ Symbol Display

" ⊘ " may appear on your TV display during operation and indicates that the function explained in this owner's manual is not available on that disc.

Regional Codes

This unit has a regional code printed on the rear of the unit. This unit can play only DVD discs labelled same as the rear of the unit or "ALL".

- Most DVD discs have a globe with one or more numbers in it clearly visible on the cover. This number must match your unit's regional code or the disc cannot play.
- If you try to play a DVD with a different regional code from your player, the message "Check Regional Code" appears on the TV screen.

Copyrights

It is forbidden by law to copy, broadcast, show, broadcast via cable, play in public, or rent copyrighted material without permission. This product features the copy protection function developed by Macrovision. Copy protection signals are recorded on some discs. When recording and playing the pictures of these discs picture noise will appear. This product incorporates copyright protection technology that is protected by U.S. patents and other intellectual property rights. Use of this copyright protection technology must be authorized by Macrovision, and is intended for home and other limited viewing uses only unless otherwise authorized by Macrovision. Reverse engineering or disassembly is prohibited.

Symbol Used in this Manual

A section whose title has one of the following symbols are applicable only to the disc or file represented by the symbol.

ALL	All discs and files
DVD	DVD-Video, DVD±R/RW in Video mode or VR mode finalized
MOVIE	Movie files contained in the USB/Memory Card/Disc
ACD	Audio CDs
MP3	MP3 files
WMA	WMA files

Contents

Safety Precaution 2
Introduction 3
Contents 4
Playable Discs 4
Main Unit 5
Remote Control 6
Touch Sensor Buttons 7
Power connections 8
Attaching the Battery Pack 9
Rechargeable Battery 9
Revolving the LCD panel 9
Hooking up the unit 10
Using the Home Menu 10
Adjust the settings 10-12
Displaying Quick Menu Information 12
Playing a Disc 13-14
Playing a movie files 15
Listening to Music 16
Viewing photo files 17
Using an External Memory Card 18
Using an USB Flash Drive 18
USB Direct Recording 19
Language Codes 20
Area Codes 20
Troubleshooting 21
Specifications 21
Enjoying in a car with the Headrest Mounting Bracket 22

Playable Discs

DVD VIDEO	DVD-VIDEO (8 cm / 12 cm disc) Discs such as movies that can be purchased or rented.
DVD R RW DVD+R	DVD±R (8 cm / 12 cm disc) - Video mode and finalized only - Supports the dual layer dsc also - DVD±R discs that contain Movie, Music or Photo files.
DVD RW	DVD-RW (8 cm / 12 cm disc) - VR mode, Video mode and finalized only - DVD-RW discs that contain Movie, Music or Photo files.
RW DVD+ReWritable	DVD+RW (8 cm / 12 cm disc) - Video mode only - DVD+RW discs that contain Movie, Music or Photo files.
COMPACT disc DIGITAL AUDIO	Audio CD (8 cm / 12 cm disc)
COMPACT disc DIGITAL AUDIO Recordable ReWritable	CD-R/RW (8 cm / 12 cm disc) CD-R/RW discs that contain audio titles, Movie, Music or Photo files.

Main Unit

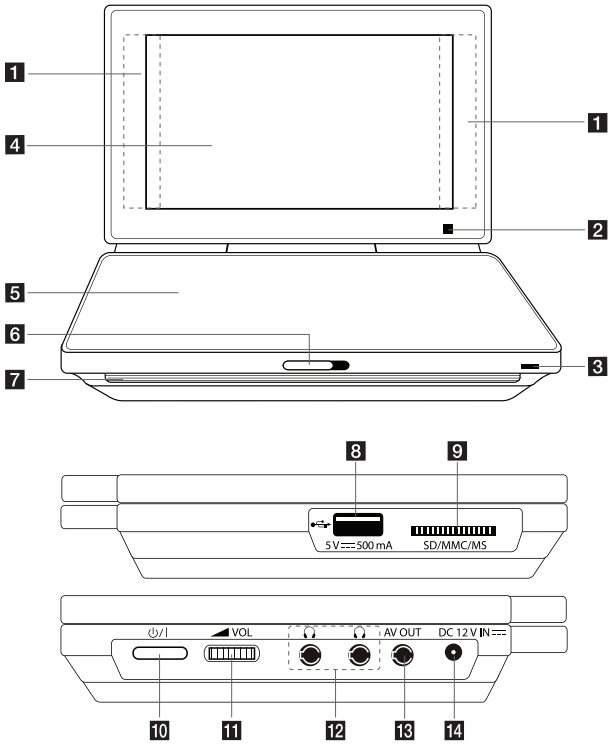

Precautions in using the touch sensor buttons:

- Use the touch pad with clean and dry hands.
- Do not touch the buttons on the touch pad with too much force.
- Do not touch the button on the touch pad with any conductive material such as metalic object. It may cause a malfunction.

1 **Touch Buttons** (Refer to page 7 for details)

- ◄ ► ▲▼ (left/right/up/down): Use to select an item in the menu.
- OK: Confirms menu selection.
- ⏮ / ⏭ (Skip): Goes to next or previous chapter/track/file.
- ► (Play): Starts playback.
- ❚❚ (Pause): Pauses playback.
- ■ (Stop): Stops playback.

2 **Remote sensor:** Point remote control here. To control the unit using the remote control, do not fold down the LCD panel.

3 **Battery charge and power indicator**

- The indicator turns red when charging and it will be changed to green when the charging is completed. (Refer to page 9 for details)
- The indicator turns green when the unit is turned on.

4 **LCD screen**

5 **Disc Lid**

6 **CD OPEN ⏏:** Use the slide open key to open the disc lid.

7 **Speakers**

8 **USB Port:** Connect a USB Flash Drive.

9 **Memory Card Slot:** Insert a memory card. (SD / MMC / MS)

10 **⏻/I (Power)**: Press to turn the unit ON or OFF.

11 **◢ VOL (Volume):** Use to adjust the volume level of the built-in speaker and earphones.

12 **🎧 (Earphones)**: Connect earphones here.

13 **AV OUT:** Connect to a TV with video and audio input.

14 **DC 12V IN:** Connect the AC adaptor or automotive adaptor.

Remote Control

Note: This manual explains the operation based on remote control.

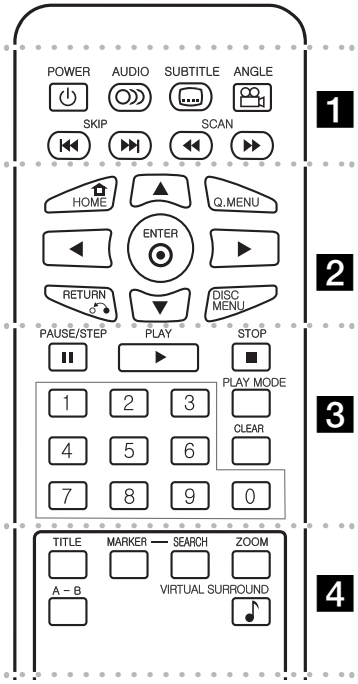

1

POWER (⏻): Switches the unit ON or OFF.

AUDIO (◎): Selects an audio language or audio channel.

SUBTITLE (▭): Selects a subtitles language.

ANGLE (🎥): Selects a DVD camera angle if it is available on the disc being played.

SKIP (⏮ / ⏭): Goes to next or previous chapter/track/file.

SCAN (◀◀/▶▶): Searches backward or forward.

2

HOME (⌂): Displays or exits the [Home Menu].

Q. MENU: Displays or exits the [Quick Menu].

▲▼ ◀ ▶: Navigates the menus.

ENTER (◉): Confirms menu selection.

RETURN (↶): Press to move backwards in the menu or exit the menu.

DISC MENU: Accesses the menu on a disc.

3

PAUSE/STEP (❚❚): Pauses playback temporarily/ press repeatedly for frame-by-frame playback.

PLAY (▶): Starts playback.

STOP (■): Stops playback.

Numerical buttons: Selects numbered options in a menu.

PLAY MODE: Repeats a desired section or sequence.

CLEAR: Removes a mark on the search menu or a number when setting the password.

4

TITLE: Accesses the disc's title menu.

MARKER : Marks any point during playback.

SEARCH : Displays [Marker Search] menu.

ZOOM: Enlarges a video image.

A - B: Repeats a section.

VIRTUAL SURROUND (♪): Press repeatedly to apply the various sound effects. (Refer to 14 page)

Put the Battery into the Remote Control

Pinch the battery holder clip together then pull the tab to remove the battery holder. Insert the battery with the + facing in the same direction as the + on the battery holder. Replace the battery holder with battery into the Remote Control unit making sure that it is fully inserted.

- Replace Remote Control unit battery with 3 V micro lithium cells such as CR. 2025 or equivalent to it.
- Dispose of battery safely in accordance with local laws. Do not dispose of in fire.

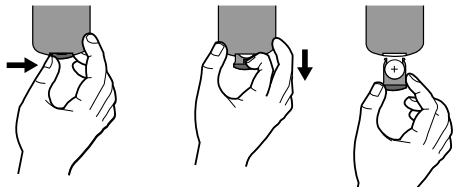

Warning: The battery used in this device may present a fire or chemical burn hazard if mistreated. Do not recharge, disassemble, incinerate, or heat above 100 °C (212 °F).
Replace the battery with Matsushita Elec. Ind. Co., Ltd. (Panasonic), part no. CR. 2025 only. Use of another battery may present a risk of fire or explosion. Dispose of used batteries. Keep batteries away from children. Do not disassemble or dispose of in fire.

Touch Sensor Buttons

Using the touch sensor buttons

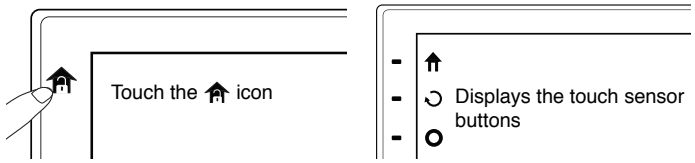

The touch sensor buttons will automatically disappear from view after 5 seconds of not being used.
If you want to use the touchable sensor button, touch the icon.

Playing a Movie

While playing of a movie, the touch sensor buttons on the LCD sensor do the following:

Icon	Identity	Operation
	Home	Displays or exits the [Home Menu]
	Up Folder	Moves to up-folder or exit the menu
	Quick Menu	Displays or exits the Quick Menu
	Disc Menu	Accesses to menu on the disc
	Repeat	Repeats a chapter/title/file
	LCD Colour/ Bright	Displays the Brightness or Colour menu for LCD display

Playing a Music

While playing of a music file, the touch sensor buttons on the LCD sensor do the following:

Icon	Identity	Operation
	Home	Displays or exits the [Home Menu]
	One song track	Selects or exits one desired track/file
	All songs track	Selects or exits all of the tracks/files
	Return	Moves backwards in the menu or exits the menu
	Repeat	Repeats tracks/files or all
	Record	Records tracks (Audio CD only)
	Virtual Surround	Applies the various sound effects modes (CONCERT → HALL → ARENA)

Playing a photo

While displaying of a photo file, the touch sensor buttons on the LCD sensor do the following:

Icon	Identity	Operation
	Home	Displays or exits the [Home Menu]
	Up Folder	Moves to up-folder or exits the menu
	Slide View	Displays all photos continuously

Power connections

Connecting the AC Adaptor

Connect the supplied AC Adaptor from the unit to a power socket.

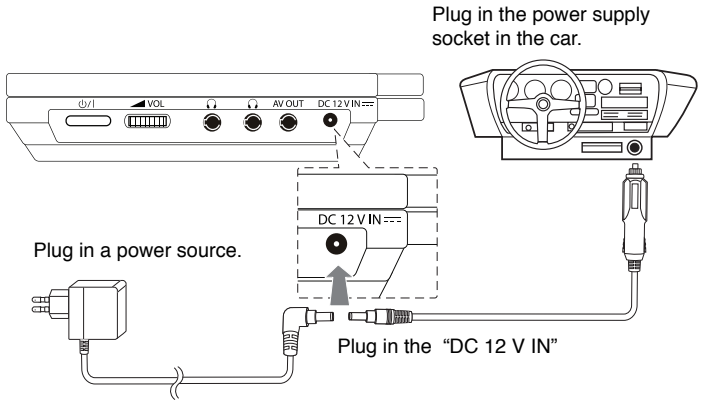

* The actual set may differ from the drawing.

AC adaptor

- This AC adaptor operates on 100 - 240 V - 1.0 A 50 / 60 Hz.
- Contact an electrical parts distributor for assistance in selecting a suitable AC plug adaptor or AC cord set.
- Manufactured by I-MAG ELECTRONICS(DONG GUAN) CO., LTD.

Connecting the Automotive adaptor

This unit and its automotive adaptor are designed for use in vehicles that have 8.5 - 15 volt, negative ground electrical systems. This is standard for most vehicles. If your vehicle has a different type of electrical system, the DC power system cannot be used.

Automotive adaptor

- This automotive adaptor operates on DC 8.5 - 15 V.
- Contact an electrical parts distributor for assistance in selecting a suitable automotive adaptor.
- Manufactured by GRAND POWER ELECTRONIC TECHNOLOGY (SHENZHEN) CO., LTD.

Caution

- To prevent electrical shock and possible damage to your unit or vehicle, always unplug the automotive adaptor from the power supply socket in the car before you remove the plug from your unit.
- A 3 amp. 250 V fuse for protection is installed in the automotive adaptor.
- While the vehicle engine is being started, disconnect the automotive adaptor from the car's cigarette lighter socket.
- Do not operate your unit when the car battery is discharged.
  Peak current from the car generator may cause the DC fuse to be blown.
- If the vehicle's supply voltage drops below approximately 10 volts, your unit may not work properly.
- Do not leave your unit in any place where the temperature exceeds 45 °C (113 °F), or the pick-up device may be damaged.

  Examples include:
  - Inside a car with the windows closed and in direct sunshine.
  - Near a heating appliance.

Attaching the Battery Pack

The following picture shows how to attach or detach the battery pack. You can attach or detach the battery pack as follows.

Attach / Detach

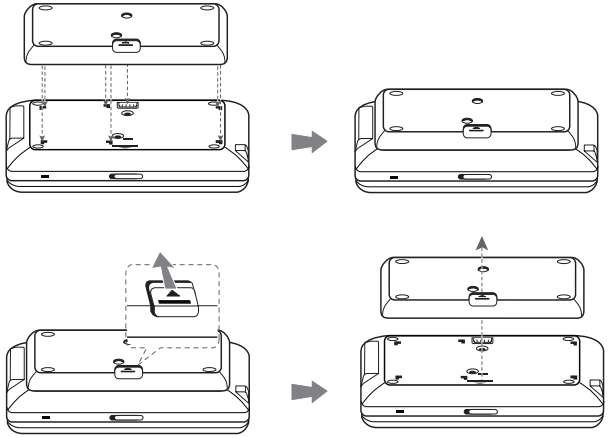

Rechargeable Battery

- Its rechargeable battery provides you with the freedom to move it around and play the files without the power cord.
- The rechargeable battery will start charging only when the AC adaptor is connected to a power outlet.
- Operating time on the battery: approximately 5 hours 30 minutes
- The maximum playing time: approximately 6 hours
- Charging time of the battery: approximately 3 hours 30 minutes
- The battery operating time may vary depending on the battery status, operational status and environment conditions.
- The battery indicator will be red while charging.
  Once the charging is completed, the indicator will be changed to green.
- When the remaining time of the battery usage is under a few seconds, "⚠ Check Battery" will be displayed on the screen.

Revolving the LCD panel

You can revolve the LCD panel of the unit clockwise a maximum of 180 degrees. You can also operate the unit after revolving the LCD panel 180 degrees and folding it back down.

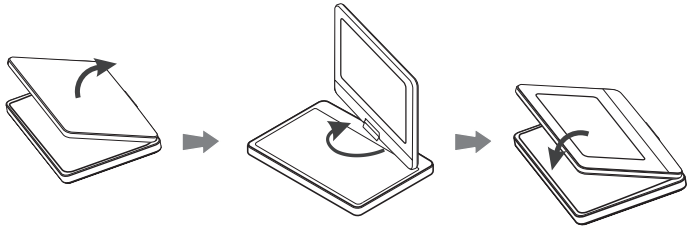

To revolve the LCD panel, place the unit on a stable and even surface such as on a table. Push the LCD panel up into a vertical position. Revolve the LCD panel clockwise slowly 180 degrees. If you need, fold the LCD panel after revolving it.

To revolve the LCD panel to its original position, open the LCD panel to a vertical position. Revolve the LCD panel counter clockwise slowly 180 degrees.

- When finished using the unit, return the LCD panel to its original position.
- Do not leave the LCD panel in the face-up position, or sudden shocks may damage it.

Hooking up the unit

Audio and Video Connections to your TV

Connect the AV OUT jack on the unit to the corresponding input jacks on your TV as shown below.

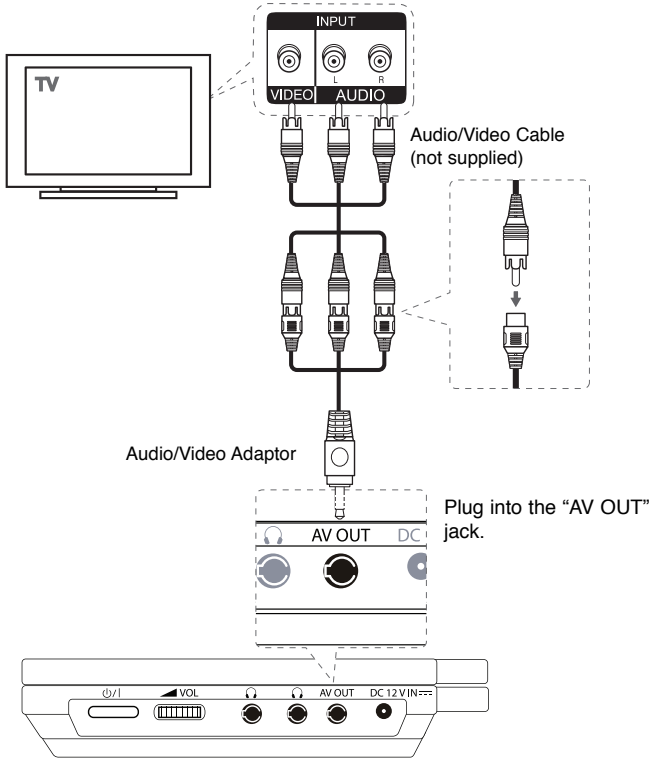

Using the Home Menu

		REMOTE	LCD
1	**Display the [Home Menu]:**	**HOME**	⌂
2	**Select an option:**	◄ ►	◄ ►
3	**Display the selected option menu:**	**ENTER**	**OK**

[MOVIE]
– Displays the [MOVIE] menu. Which shows DivX movie files on the disc.
– Plays DVD-Video disc.

[MUSIC] – Displays the [MUSIC] menu.

[PHOTO] – Displays the [PHOTO] menu.

[SETUP] – Displays the [SETUP] menu.

Adjust the settings

		REMOTE	LCD
1	**Display the [Home Menu]:**	-	-
2	**Select the [Setup] option:**	◄ ► / ENTER	◄ ► / OK
3	**Select a desired option on the first level:**	▲ ▼	▲ ▼
4	**Move to the second level:**	►	►
5	**Select a desired option on the second level:**	▲ ▼ / ENTER	▲ ▼ / OK
6	**Move to the third level:**	►	►
7	**Adjust or confirm the setting:**	▲ ▼ / ENTER	▲ ▼ / OK
8	**Go back to the previous level:**	◄	◄
9	**Exit the [Setup] menu:**	**HOME**	⌂

When you turn on for the first time

The menu for language selection will appear when you turn on the unit for the first time. You must select a language to use the unit. Use ▲▼ ◄ ► to select a language then press **ENTER** then the confirm menu will appear. Use ◄ ► to select [Enter] and press **ENTER**.

Adjust the language settings

Menu Language – Select a language for the Setup menu and on-screen display.

Disc Audio/Subtitle/Menu – Select a language for the Disc Audio/Subtitle/Menu.

[Original]: Refers to the original language in which the disc was recorded.

[Other]: To select another language, press number buttons then **ENTER** to enter the corresponding 4-digit number according to the language code list. (see page 20) If you make a mistake while entering number, press **CLEAR** to delete numbers then correct it.

[Off] (for Disc Subtitle): Turn off Subtitle.

Adjust the display settings

TV Aspect – Select which screen aspect to use based on the shape of your TV screen.

[4:3]: Select when a standard 4:3 TV is connected.

[16:9]: Select when a 16:9 wide TV is connected.

Display Mode – If you selected 4:3, you will need to define how you would like widescreen programs and films to be displayed on your TV screen.

[Letterbox]: This displays a widescreen picture with black bands at the top and bottom of the screen.

[Panscan]: This fills the entire 4:3 screen, cropping the picture as necessary.

LCD Color – Select to adjust the LCD colour.

LCD Brightness – Select to adjust the LCD Brightness.

Adjust the audio settings

DRC (Dynamic Range Control) – Make the sound clear when the volume is turned down (Dolby Digital only). Set to [On] for this effect.

Vocal – Set to [On] only when a multi-channel karaoke DVD is playing. The karaoke channels on the disc mix into normal stereo sound.

Adjust the lock settings

You must set the [Area Code] option to use the lock options. Select [Area Code] option then press ►. Enter a 4-digit password then press **ENTER**. Enter it again then press **ENTER** to verify. If you make a mistake while entering number, press **CLEAR** then correct it.
If you forget your password you can reset it. First, remove the disc in the unit. Select Lock icon on the Setup menu. Input the 6-digit number “210499” and the password will be cleared.

Rating – Select a rating level. Rating one (1) has the most restrictions and rating eight (8) is the least restrictive. Select [Unlock] to deactivate the rating.

Password – Sets or changes the password for lock settings.

[New]: Enter a new 4-digits password using the numerical buttons then press **ENTER**. Enter the password again to confirm.

[Change]: Enter the new password twice after entering the current password

Area Code – Select a code for a geographic area as the playback rating level. This determines which area’s standards are used to rate DVDs controlled by the parental lock. (See page 20)

Adjust the others settings

REC Bitrate – You can choose a bit rate for USB direct recording.
Higher bit rate gives the better sound quality but uses more space on the USB Flash Drive. For USB direct recording, see page 19.

DivX VOD
ABOUT DIVX VIDEO: DivX® is a digital video format created by DivX,Inc. This is an official DivX Certified device that plays DivX video. Visit www.divx.com for more information and software tools to convert your files into DivX video.
ABOUT DIVX VIDEO-ON-DEMAND: This DivX Certified® device must be registered in order to play DivX Video-on-Demand (VOD) content. To generate the registration code, locate the DivX VOD section in the device setup menu. Go to vod.divx.com with this code to complete the registration process and learn more about DivX VOD.

[Register]: Displays the registration code of your player.

[Deregister]: Deregister your player and display the deregister code.

Displaying Quick Menu Information

		REMOTE	LCD
1	**Play the disc loaded on the unit:**	► PLAY	OK
2	**Press Q. MENU during playback:**	Q. MENU	⌂ / ↺
3	**Select an item:**	▲ ▼ / ENTER	▲ ▼ / OK
4	**Adjust the item value:**	◄ ► / ENTER	◄ ► / OK
5	**Exit the menu:**	Q. MENU	↺

You can select an item by pressing ▲▼ and change or select the setting by pressing ◄ ► or using the numbered buttons (0-9).

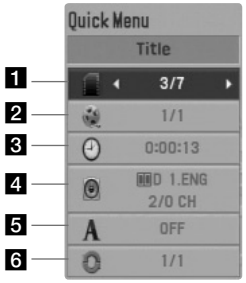

1 Titie/Track - Current title number/total number of titles
2 Chapter - Current chapter number/total number of chapters
3 Time - Elapsed playing time
4 Audio - Selected audio language or channel
5 Subtitle - Selected subtitle
6 Angle - Selected angle/total number of angles

Playing a Disc

		REMOTE	LCD
1	**Insert a disc:**	-	-
2	**Adjust the disc menu settings:** A disc menu may not appear on the screen depending on the disc.	◄ ► / ENTER	◄ ► / OK
3	**Start the playback:**	► PLAY	►
4	**Stop the playback:**	■ STOP	■

Resume the playback DVD MOVIE

Press **STOP (■)** to stop playback, the unit records the stopped point depending on the disc. " ❚❚■ " appears on the screen briefly. Press **PLAY (►)** to resume playback (from the scene point). If you press **STOP (■)** again or unload the disc (" ■ " appears on the screen), the unit will clear the stopped point.
(❚❚■ =Resume Stop, ■ =Complete Stop)
The resume point may be cleared when a button is pressed.
(for example: POWER, OPEN, etc)

Playing a DVD that has a menu DVD

Most DVD now have menus which load first before the film begins to play. You can navigate these menus using ▲▼ ◄ ► or number button to highlight an option. Press **ENTER** to select.

Playing a DVD VR disc

This unit will play DVD-RW disc that is recorded using the Video Recording (VR) format. When you insert a disc DVD VR disc, the menu will appear on the screen. Use ▲▼ to select a title then press **PLAY (►)**. To display DVD-VR menu, press **DISC MENU** or **TITLE**.
Some DVD-VR disc are made with CPRM data by DVD RECORDER. The unit does not support these kinds of discs.

Skip to the next/previous chapter/track/file ALL

Press **SKIP (►►I)** to move to the next chapter/track/file.
Press **SKIP (I◄◄)** to return to the beginning of the current chapter/track/file.
Press **SKIP (I◄◄)** twice briefly to step back to the previous chapter/track/file.

Pause a playback ALL

Press **PAUSE/STEP (❚❚)** to pause playback. Press **PLAY (►)** to continue playback

Frame-by-Frame playback DVD MOVIE

Press **PAUSE/STEP (❚❚)** repeatedly to play Frame-by-Frame playback.

Fast forward or fast reverse DVD ACD WMA MP3 MOVIE

Press **SCAN (◄◄** or **►►)** to play fast forward or fast reverse during playback. You can change the playback speed by pressing **SCAN (◄◄** or **►►)** repeatedly. Press **PLAY (►)** to continue play at normal speed.
- DVD, Movie: ◄◄◄◄◄ ← ◄◄◄◄ ← ◄◄◄ ← ◄◄ / ►► → ►►► → ►►►► → ►►►►►
- ACD, WMA, MP3: ◄◄◄◄ ← ◄◄◄ ← ◄◄ / ►► → ►►► → ►►►►

Repeating a specific portion (A-B) DVD ACD MOVIE

Press **A-B** at the beginning of the portion you wish to repeat and again at the end of the portion. Your selected portion will be repeated continually.
To return to normal playback, press **A-B** again.

Selecting a subtitle language DVD MOVIE

During playback, press **SUBTITLE (...)** repeatedly to select a desired subtitle language.

Watching from a different angle DVD

If the angle indicator appears on the screen for a moment, you can select a different camera angle by pressing **ANGLE ( )** repeatedly.

Hearing a different audio DVD MOVIE

During playback, press **AUDIO ( )** repeatedly to switch between the available audio languages, channels or encoding methods.

Slow down the playing speed DVD MOVIE (4steps, forward only)

While playback is paused, press **SCAN (►►)** to slow down forward playback. You can change the playback speed by pressing **SCAN (►►)** repeatedly to play in slow motion. Press **PLAY (►)** to continue play at normal speed.

Watching an enlarged video image DVD MOVIE

During playback or pause mode, press **ZOOM** repeatedly to select zoom mode. You can move through the zoomed picture using ▲▼◄ ► buttons. Press **CLEAR** to exit. (100 % → 200 % → 300 % → 400 % → 100 %)

Viewing the title menu DVD

Press **TITLE** to display the disc's title menu, if available.

Viewing the DVD menu DVD

Press **DISC MENU** to display the disc menu, if available.

Starting play from selected time DVD MOVIE

Searches for the starting point of entered time code. Press **Q.MENU** then select clock icon. Enter a time then press **ENTER**. For example, to find a scene at 1 hours, 10 minutes, and 20 seconds, enter "11020" and press **ENTER**. If you enter the wrong number, press **CLEAR** to enter again.

Mark a scene on a disc DVD MOVIE

You can mark a position on a disc to return to. Simply press **MARKER** at the desired position. The marker icon will appear on-screen briefly. Repeat to place up to nine markers.
Also you can recall or clear the positions. Press **SEARCH** and [Marker Search] menu will appear. Use ◄ or ► to select a desired marker on the menu, then press **ENTER** to recall it or **CLEAR** to clear it.

Viewing the playback time DVD MOVIE

During playback, press **ENTER** to display the time progress bar. You can see the current playback time.

Last Scene Memory DVD ACD

This unit memorizes the last scene from the last disc that is viewed. The last scene remains in memory even if you remove the disc from the player or switch off the unit. If you load a disc that has the scene memorized, the scene is automatically recalled.

Screen Saver

The screen saver appears when you leave the unit in Stop mode for about five minutes. If the Screen Saver is displayed for five minutes, the unit automatically turns itself off.

Virtual Surround

You can enjoy surround sound simply by selecting one of the pre-programmed sound fields according to the program you want to listen to. Each time you press **VIRTUAL SURROUND**, the sound mode is changed as follows:
(CONCERT → HALL → ARENA → Normal (default))

Playing repeatedly ACD WMA MP3 DVD

During playback, press **PLAY MODE** repeatedly to select a desired repeat mode.

Audio CDs / Music files

1 – The current track or file will be played back repeatedly.
ALL – All the tracks or files will be played back repeatedly.
– The tracks or files will be played back in random order.
ALL – All the tracks or files will be played back repeatedly in random order.
To cancel the repeat or random playback, press **CLEAR**.

DVDs

Chapter Repeat – The one chapter will be played back repeatedly.
Title Repeat – All of the chapters will be played back repeatedly.
To return to normal playback, press **PLAY MODE** repeatedly to select [Off].

Playing a movie file

The player can play movie files on the disc/USB device/Memory Card and video contents recorded on a DVD-RW(VR mode) discs.
You can use various playback functions. Refer to pages 13-14

		REMOTE	LCD
1	**Insert a disc/USB device/Memory Card containing movie contents:**	-	-
2	**Display the [Home Menu]:**	-	-
3	**Select the [MOVIE] option:**	◄ ► / ENTER	◄ ► / OK
4	**Select a movie from the [MOVIE] menu:**	▲ ▼ / ENTER	▲ ▼ / OK
5	**Play the selected movie:**	► PLAY	OK
6	**Stop the playback:**	■ STOP	■

Movie file requirement

Movie file compatibility with this player is limited as follows:
- Available resolution size: 720 x 576 (W x H) pixel.
- The file names of movie and subtitle are limited to 20 characters.
- Movie file extensions: “.avi”, “.mpg”, “.mpeg”
- Playable Movie subtitle: SubRip (.srt / .txt), SAMI (.smi), SubStation Alpha (.ssa/.txt), MicroDVD (.sub/.txt), VobSub (.sub), SubViewer 2.0 (.sub/.txt), TMPlayer (.txt), DVD Subtitle System (.txt)
- Playable Codec format: “DIVX3.xx”, “DIVX4.xx”, “DIVX5.xx”, “MP43”, “3IVX”
- Playable Audio format: “Dolby Digital”, “PCM”, “MP3”, “WMA”
- Sampling frequency: within 8 to 48 kHz (MP3), within 32 to 48 kHz (WMA)
- Bit rate: within 8 to 320 kbps (MP3), within 32 to 192 kbps (WMA), less than 4 Mbps (DivX file)
- CD-R/RW, DVD±R/RW Format: ISO 9660
- Only the playback function is supported with DivX 6.0 in the unit.
- Maximum Files/Folders: Less than 600 (total number of files and folders)
- This player does not support files that are recorded with GMC*1 or Qpel*2. Those are video encoding techniques in MPEG4 standard, like DivX has.
  *1 GMC - Global Motion Compensation
  *2 Qpel - Quarter pixel

Notice for displaying the DivX subtitle

Press and hold **SUBTITLE** for 3 seconds during playback. The language code will appear. Press ◄ ► to select another language code until the subtitle is displayed properly and then press **ENTER**.

Tip:
During playback, press **ENTER** to display the time progress bar.

Listening to Music

This unit can play Audio CDs and MP3/WMA files
You can use various playback functions. Refer to pages 13-14

		REMOTE	LCD
1	**Insert an Audio CD or a Disc/USB Flash Drive/Memory Card containing MP3/WMA files:**	-	-
2	**Display the [Home Menu]:**	-	-
3	**Select the [MUSIC] option:**	◄ ► / ENTER	◄ ► / OK
4	**Select the music from the [MUSIC] menu:**	◄ ► / ENTER	◄ ► / OK
5	**Play the selected music:**	► PLAY	OK
6	**Stop the playback:**	■ STOP	■

MP3/WMA music file requirement

MP3/WMA compatibility with this unit is limited as follows:
- File extensions: “.mp3”, “.wma”
- Sampling frequency: within 8 to 48 kHz (MP3), within 32 to 48 kHz (WMA)
- Bit rate: within 8 to 320 kbps (MP3), within 32 to 192 kbps (WMA)
- CD-R/RW, DVD±R/RW Format: ISO 9660
- Maximum Files/Folders: Less than 600 (total number of files and folders)

Tips:
- During playback of an MP3 file, it displays the file information. [Song, Album, Artist, Time progress bar]
- Press and hold ◄ ► to move to the previous or the next page.
- To go directly to any track or file and play, enter the track/file number using the numbered buttons (0-9).
- During playback, you can toggle between the music list and playing mode with **RETURN (↶).**

Viewing photo files

		REMOTE	LCD
1	**Insert a Disc/USB Device/Memory Card photo files:**	-	-
2	**Display the [Home Menu]:**	-	-
3	**Select a [PHOTO] option:**	◄ ► / ENTER	◄ ► / OK
4	**Select a photo from the [PHOTO] menu:**	▲ ▼ ◄ ►	▲ ▼ ◄ ►
5	**Display the selected photo in full screen:**.	ENTER	OK
6	**Return to the [PHOTO] menu screen:**	■ STOP	■

Viewing a photo file in full screen

You can use various options during viewing a picture in full screen.
Use ▲▼◄ ► to select an option and use the options as described below.

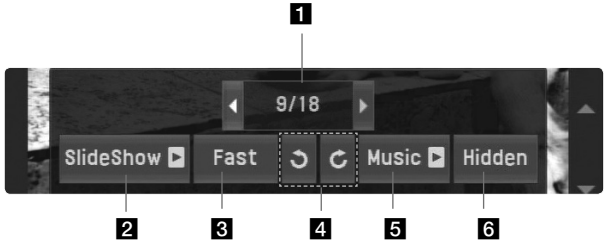

1 Use ◄ ► to highlight (◄ ►) icon then press **ENTER** to the previous or next file.

2 Press **ENTER** to start or pause the slide show.

3 Press **ENTER** to change slide show speed. (Fast → Slow → Normal)

4 Press **ENTER** to rotate the picture clockwise or counterclockwise.

5 Press **ENTER** to start or pause background music.

6 Press **ENTER** to exit option menu.
Press **Q.MENU** to display the menu again.

Skip to the next/previous photo

Press **SKIP (I◄◄** or **►►I)** to view the previous or next photo in full screen.

Watching an enlarged photo image

While viewing of a photo in full screen, press **ZOOM** repeatedly to select zoom mode. You can move through the zoomed photo using ▲▼◄ ► buttons. Press **CLEAR** to exit.

Photo file requirements

- File extensions: “.jpg”, “.jpeg”
- Photo size: Less than 2 MB recommended
- CD-R/RW, DVD±R/RW Format: ISO 9660
- Maximum Files/Folders: Less than 600 (total number of files and folders)
- While slide show is in progress, MP3 file only can be played back.

Tip:
For the files that are contained on a disc or USB device/Memory Card, if you enter the file number by using the numbered buttons (0-9), the unit shows the specific file to you.

Using an External Memory Card

You can play MP3/WMA/JPEG/Movie files from a memory card.
You can use various playback functions. Refer to pages 13-14.

		REMOTE	LCD
1	**Insert an external memory card in the unit:**	-	-
2	**Display the [Home Menu]:**	-	-
3	**Select a file:** [MOVIE], [MUSIC] or [PHOTO] option	◄ ► / ENTER	◄ ► / OK
4	**Select the [MEMORY CARD] option:**	◄ ►	◄ ►
5	**Display corresponding menu list:** [MOVIE], [MUSIC] or [PHOTO] menu appears.	ENTER	OK

Cards useable on this unit

- Secure Digital Card (SD)
- Multi Media Card (MMC)
- Memory Stick (MS)
- This unit supports only memory cards with FAT12, FAT16 or FAT32 format.
- Only use the memory cards recommended above.
- The card will only fit in right direction and Do not force it.
  The card will only fit accurately when properly inserted.
- Not all memory cards are compatible with this unit.
- Do not extract the memory card while operating (play, etc.).
- Digital camera and mobile phone are not supported.
- USB Port on this unit cannot be connected to PC. The unit cannot be used as a storage device.

Using an USB Flash Drive

You can play MP3/WMA/JPEG/DivX files in the USB Flash Drive with version 1.1, 2.0.
You can use various playback functions. Refer to pages 13-14.

		REMOTE	LCD
1	**Insert a USB device to the USB port:**	-	-
2	**Display the [Home Menu]:**	-	-
3	**Select a file:** [MOVIE], [MUSIC] or [PHOTO] option	◄ ► / ENTER	◄ ► / OK
4	**Select the [USB] option:**	◄ ►	◄ ►
5	**Display corresponding menu list:** [MOVIE], [MUSIC] or [PHOTO] menu appears.	ENTER	OK

Notes an USB Flash Drive

- Do not extract the USB device while operating.
- We recommend that you back up your important files from the USB Flash Drive to protect against accidental loss.
- If you use a USB extension cable or USB HUB, the USB device might not be recognized.
- Music files (MP3/WMA), photo files (JPEG) and DivX files can be played.
  For details of operations on each file type, refer to relevant pages.
- Maximum Files/USB Flash Drive: Less than 600 (total number of files and folders)
- The USB function of this unit does not support all kinds of USB devices.
- Digital camera and mobile phone are not supported.
- USB Port of the unit cannot be connected to PC. The unit cannot be used as a storage device.

USB Direct Recording

Connect a USB Flash Drive to the unit before recording.
Set [REC Bitrate] option as required. (Refer to 12 page)

		REMOTE	LCD
1	**Insert an Audio CD:**	-	-
2	**Display the [Home Menu]:**	-	-
3	**Select a [MUSIC] option:**	◄ ► / ENTER	◄ ► / OK
4	**Select music from the [MUSIC] menu:**	◄ ► / ENTER	◄ ► / OK
5	**Select a recording option:** • [All song], [Selected songs] or [A playing song] option • [X1] or [X4] option - X1: It will be recored at normal speed and you can listen to the music. - X4: It will be recorded at 4X speed but you can not listen to the music.	AUDIO	
6	**Start the recording:**	▲▼ / ENTER	▲▼ / OK
7	**Stop the recording:**	■ STOP	■

Notes on USB direct Recording

- The recording is available only for Audio CD tracks.
- If you use this function, the “CD_REC” folder will be created automatically in the USB Flash Drive and the music file(s) will be saved in it.
- If you remove the USB Flash Drive or turn off the unit while recording, it can cause a malfunction.
- If the remaining space on the USB Flash Drive is insufficient, the recording function will not be possible. To increase the free space, delete files in it using your PC.
- CD-G disc and Audio CDs encoded in DTS cannot be recorded.
- External HDD, Multi Card reader, Multi Partition USB, Memory Card, Locked device and MP3 players are not supported.
- Recording format: MP3 file
- Encoding Bitrate: 128 Kbps / 160 Kbps / 192 Kbps / 256 Kbps / 320 Kbps
- Maximum Files/Folders: Less than 600 (total number of files and folders)
- To go directly to track and play, enter the track number using the numbered buttons (0-9).

The making of unauthorized copies of copy-protected material, including computer programs, files, broadcasts and sound recording, may be an infringement of copyrights and constitute a criminal offence.
This equipment should not be used for such purposes.

Be responsible
Respect copyrights

Language Codes

Use this list to input your desired language for the following initial settings: Disc Audio, Disc Subtitle, Disc Menu.

Language	Code	Language	Code	Language	Code	Language	Code	Language	Code	Language	Code
Afar	6565	Croatian	7282	Hausa	7265	Lingala	7678	Quechua	8185	Tajik	8471
Afrikaans	6570	Czech	6783	Hebrew	7387	Lithuanian	7684	Rhaeto-Romance	8277	Tamil	8465
Albanian	8381	Danish	6865	Hindi	7273	Macedonian	7775	Rumanian	8279	Telugu	8469
Ameharic	6577	Dutch	7876	Hungarian	7285	Malagasy	7771	Russian	8285	Thai	8472
Arabic	6582	English	6978	Icelandic	7383	Malay	7783	Samoan	8377	Tonga	8479
Armenian	7289	Esperanto	6979	Indonesian	7378	Malayalam	7776	Sanskrit	8365	Turkish	8482
Assamese	6583	Estonian	6984	Interlingua	7365	Maori	7773	Scots Gaelic	7168	Turkmen	8475
Aymara	6588	Faroese	7079	Irish	7165	Marathi	7782	Serbian	8382	Twi	8487
Azerbaijani	6590	Fiji	7074	Italian	7384	Moldavian	7779	Serbo-Croatian	8372	Ukrainian	8575
Bashkir	6665	Finnish	7073	Japanese	7465	Mongolian	7778	Shona	8378	Urdu	8582
Basque	6985	French	7082	Kannada	7578	Nauru	7865	Sindhi	8368	Uzbek	8590
Bengali, Bangla	6678	Frisian	7089	Kashmiri	7583	Nepali	7869	Singhalese	8373	Vietnamese	8673
Bhutani	6890	Galician	7176	Kazakh	7575	Norwegian	7879	Slovak	8375	Volapük	8679
Bihari	6672	Georgian	7565	Kirghiz	7589	Oriya	7982	Slovenian	8376	Welsh	6789
Breton	6682	German	6869	Korean	7579	Panjabi	8065	Spanish	6983	Wolof	8779
Bulgarian	6671	Greek	6976	Kurdish	7585	Pashto, Pushto	8083	Sudanese	8385	Xhosa	8872
Burmese	7789	Greenlandic	7576	Laothian	7679	Persian	7065	Swahili	8387	Yiddish	7473
Byelorussian	6669	Guarani	7178	Latin	7665	Polish	8076	Swedish	8386	Yoruba	8979
Chinese	9072	Gujarati	7185	Latvian, Lettish	7686	Portuguese	8084	Tagalog	8476	Zulu	9085

Area Codes

Choose an area code from this list.

Area	Code	Area	Code	Area	Code	Area	Code	Area	Code	Area	Code
Afghanistan	AF	Costa Rica	CR	Greenland	GL	Maldives	MV	Paraguay	PY	Sri Lanka	LK
Argentina	AR	Croatia	HR	Hong Kong	HK	Mexico	MX	Philippines	PH	Sweden	SE
Australia	AU	Czech Republic	CZ	Hungary	HU	Monaco	MC	Poland	PL	Switzerland	CH
Austria	AT	Denmark	DK	India	IN	Mongolia	MN	Portugal	PT	Taiwan	TW
Belgium	BE	Ecuador	EC	Indonesia	ID	Morocco	MA	Romania	RO	Thailand	TH
Bhutan	BT	Egypt	EG	Israel	IL	Nepal	NP	Russian Federation	RU	Turkey	TR
Bolivia	BO	El Salvador	SV	Italy	IT	Netherlands	NL	Saudi Arabia	SA	Uganda	UG
Brazil	BR	Ethiopia	ET	Jamaica	JM	Netherlands Antilles	AN	Senegal	SN	Ukraine	UA
Cambodia	KH	Fiji	FJ	Japan	JP	New Zealand	NZ	Singapore	SG	United States	US
Canada	CA	Finland	FI	Kenya	KE	Nigeria	NG	Slovak Republic	SK	Uruguay	UY
Chile	CL	France	FR	Kuwait	KW	Norway	NO	Slovenia	SI	Uzbekistan	UZ
China	CN	Germany	DE	Libya	LY	Oman	OM	South Africa	ZA	Vietnam	VN
Colombia	CO	Great Britain	GB	Luxembourg	LU	Pakistan	PK	South Korea	KR	Zimbabwe	ZW
Congo	CG	Greece	GR	Malaysia	MY	Panama	PA	Spain	ES		

Troubleshooting

Symptom	Cause	Correction
No power.	The power cord is disconnected.	Plug the power cord into the wall outlet securely.
	The battery is discharged.	Recharge the battery.
The power is on, but the unit does not work.	No disc is inserted.	Insert a disc.
No picture.	The TV is not set to receive the signal from the unit.	Select the appropriate video input mode on the TV.
	The video cable is not connected securely.	Connect the video cable securely.
No sound.	The equipment connected with the audio cable is not set to receive the signal from the unit.	Select the correct input mode of the audio amplifier.
	The volume is set to minimum.	Use the volume controller to adjust the volume.
	The AUDIO options are set to the wrong position.	Set the AUDIO settings to the correct position.
The unit does not start play-back.	An unplayable disc is inserted.	Insert a playable disc. (Check the disc type and regional code.)
	The rating level is set.	Change the rating level.
The remote control does not work properly.	The remote control is not pointed at the remote sensor on the unit.	Point the remote control at the remote sensor of the unit.
	The remote control is too far from the unit.	Operate the remote control closer to the unit.

Specifications

General

Power requirements	12 V ⎓ 2.0 A
External Dimensions	(230 x 46 x 158) mm (W x H x D)
Net Weight (Approx.)	1.4 kg (With a battery)
Operating temperature	0 °C to 40 °C
Operating humidity	5 % to 90 %
Laser	Semiconductor laser
Signal system	PAL

Connectors

Audio/Video Output	ø 3.5 mm mini jack x 1
- Video: 1.0 V (p-p), 75 Ω, sync negative	
- Audio: 1.5 Vrms (1 KHz, 0 dB)	
Earphone terminal	ø 3.5 mm stereo mini jack x 2

Input

USB IN	4 pin (USB 2.0 / 1.1 standard)
Bus power supply	5 V ⎓ 500 mA

Liquid Crystal Display

Panel size	20.3 cm (diagonal)
Projection system	R.G.B. stripe
Driving system	TFT active matrix
Resolution	480 x 234 (WQVGA)

Accessories

- Audio/Video Adaptor
- AC Adaptor (IM120W-200B)
- Automotive Adaptor
- Remote Control
- Battery for Remote Control (Lithium Battery)
- Battery Pack
- Carry Bag
- Car Mount

Designs and specifications are subject to change without prior notice.

Enjoying in a car with the Headrest Mounting Bracket

You can enjoy video in the back seat attaching the unit to the back of the front seat.

Warnings

- The driver must not operate this unit while the vehicle is moving.
  Do not operate this unit where it can be viewed by the driver.
  Driver operation or viewing of this unit while the vehicle is moving will cause distraction which may result in serious accident and personal injury or property damage.
- Do not attach or detach while driving, and do not attach in the following locations, otherwise it may result in injury or traffic accidents:
  – anywhere other than the back of the seat
  – in a location that interferes with the driver's view or operation of the car
  – in a location that interferes with the operation of an airbag
  – in a location that interferes with the driving instruments.
- Depending on the type of headrest, you may not be able to attach the bracket.

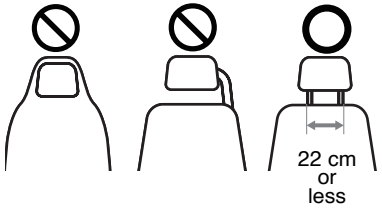

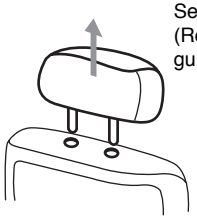

Separate the headrest. (Refer to your car's user guide.)

Install the cradle as shown in the figure.

Note: If you are not able to install the headrest cradle because of the pipe thickness of your headrest, extend the cradle by loosening its screws and reinstalling it.

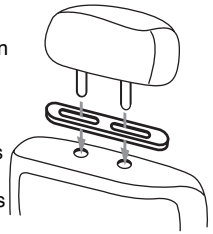

1

2

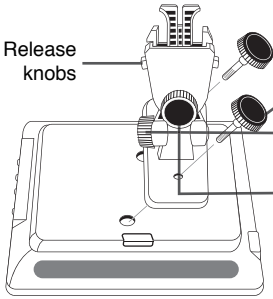

Put the headrest mounting bracket on the back of unit and fix it using the fixing screws.

Note: Before fixing bracket, attach the battery pack.

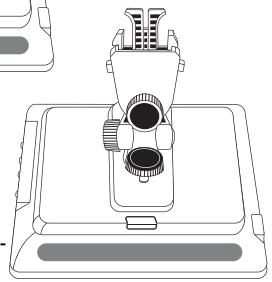

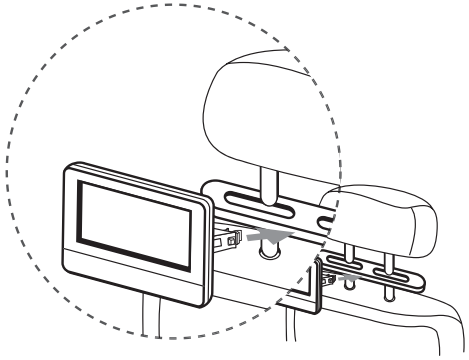

Fit the headrest mounting bracket joined to the unit to the cradle.

3

4

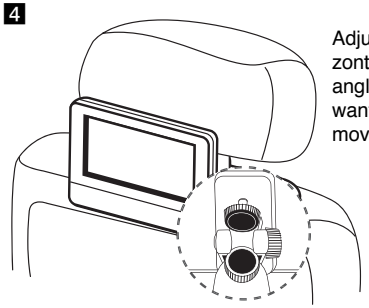

Adjust the horizontal and vertical angles as you want and enjoy the movies.

Note: When you adjust angles, loosen the adjusting screws. Adjusting by force can lead to damage of the inside of your headrest mounting bracket.

LG
Life's Good

DOLBY
DIGITAL

DVD
VIDEO

DIVX

Plays
Windows
Media™