LG
Life's Good

OWNER'S MANUAL

Mini Hi-Fi System

Please read this manual carefully before operating your set and retain it for future reference.

RCT606 (RCT606, RCS606F/W)

P/NO : MFL67006431

www.lg.com

Safety Information

CAUTION

RISK OF ELECTRIC SHOCK DO NOT OPEN

CAUTION: TO REDUCE THE RISK OF ELECTRIC SHOCK DO NOT REMOVE COVER (OR BACK) NO USER-SERVICEABLE PARTS INSIDE REFER SERVICING TO QUALIFIED SERVICE PERSONNEL.

This lightning flash with arrowhead symbol within an equilateral triangle is intended to alert the user to the presence of uninsulated dangerous voltage within the product's enclosure that may be of sufficient magnitude to constitute a risk of electric shock to persons.

The exclamation point within an equilateral triangle is intended to alert the user to the presence of important operating and maintenance (servicing) instructions in the literature accompanying the product.

WARNING: TO PREVENT FIRE OR ELECTRIC SHOCK HAZARD, DO NOT EXPOSE THIS PRODUCT TO RAIN OR MOISTURE.

WARNING: Do not install this equipment in a confined space such as a book case or similar unit.

CAUTION: Do not block any ventilation openings. Install in accordance with the manufacturer's instructions.
Slots and openings in the cabinet are provided for ventilation and to ensure reliable operation of the product and to protect it from over heating. The openings shall be never be blocked by placing the product on a bed, sofa, rug or other similar surface. This product shall not be placed in a built-in installation such as a bookcase or rack unless proper ventilation is provided or the manufacturer's instruction has been adhered to.

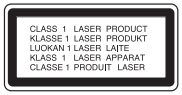

CAUTION: This product employs a Laser System. To ensure proper use of this product, please read this owner's manual carefully and retain it for future reference. Shall the unit require maintenance, contact an authorized service center.
Use of controls, adjustments or the performance of procedures other than those specified herein may result in hazardous radiation exposure.
To prevent direct exposure to laser beam, do not try to open the enclosure. Visible laser radiation when open. DO NOT STARE INTO BEAM.

CAUTION concerning the Power Cord

Most appliances recommend they be placed upon a dedicated circuit;

That is, a single outlet circuit which powers only that appliance and has no additional outlets or branch circuits. Check the specification page of this owner's manual to be certain. Do not overload wall outlets. Overloaded wall outlets, loose or damaged wall outlets, extension cords, frayed power cords, or damaged or cracked wire insulation are dangerous. Any of these conditions could result in electric shock or fire. Periodically examine the cord of your appliance, and if its appearance indicates damage or deterioration, unplug it, discontinue use of the appliance, and have the cord replaced with an exact replacement part by an authorized service center. Protect the power cord from physical or mechanical abuse, such as being twisted, kinked, pinched, closed in a door, or walked upon. Pay particular attention to plugs, wall outlets, and the point where the cord exits the appliance. To disconnect power from the mains, pull out the mains cord plug. When installing the product, ensure that the plug is easily accessible.

This device is equipped with a portable battery or accumulator.

Safety way to remove the battery or the battery from the equipment: Remove the old battery or battery pack, follow the steps in reverse order than the assembly. To prevent contamination of the environment and bring on possible threat to human and animal health, the old battery or the battery put it in the appropriate container at designated collection points. Do not dispose of batteries or battery together with other waste. It is recommended that you use local, free reimbursement systems batteries and accumulators. The battery shall not be exposed to excessive heat such as sunshine, fire or the like.

CAUTION: The apparatus shall not be exposed to water (dripping or splashing) and no objects filled with liquids, such as vases, shall be placed on the apparatus.

Copyrights

It is forbidden by law to copy, broadcast, show, broadcast via cable, play in public, or rent copyrighted material without permission. This product features the copy protection function developed by Macrovision. Copy protection signals are recorded on some discs. When recording and playing the pictures of these discs picture noise will appear. This product incorporates copyright protection technology that is protected by U.S. patents and other intellectual property rights. Use of this copyright protection technology must be authorized by Macrovision, and is intended for home and other limited viewing uses only unless otherwise authorized by Macrovision. Reverse engineering or disassembly is prohibited.

CONSUMERS SHOULD NOTE THAT NOT ALL HIGH DEFINITION TELEVISION SETS ARE FULLY COMPATIBLE WITH THIS PRODUCT AND MAY CAUSE ARTIFACTS TO BE DISPLAYED IN THE PICTURE. IN CASE OF 525 OR 625 PROGRESSIVE SCAN PICTURE PROBLEMS, IT IS RECOMMENDED THAT THE USER SWITCH THE CONNECTION TO THE 'STANDARD DEFINITION' OUTPUT. IF THERE ARE QUESTIONS REGARDING OUR TV SET COMPATIBILITY WITH THIS MODEL 525p AND 625p UNIT, PLEASE CONTACT OUR CUSTOMER SERVICE CENTER.

You have to set the disc format option to [Mastered] in order to make the discs compatible with the LG players when formatting rewritable discs. When setting the option to Live File System, you cannot use it on LG players.

(Mastered/ Live File System : Disc format system for Windows Vista)

Table of Contents

1 Getting Started

2 Safety Information
6 Unique Features
6 Accesories
7 Playable file Requirement
7 – MP3/ WMA music file requirement
7 – Compatible USB Devices
7 – USB device requirement
8 Remote control
10 Front panel
12 Rear panel

2 Connecting

13 Connecting to speakers
13 – Attaching the speakers to the unit
13 – Attaching the woofer cables to the unit
14 Optional Equipment Connection
14 – AUX IN Connection
14 – PORT. IN Connection
14 – AUDIO OUT connection
15 – USB Connection
15 – Antenna Connection

3 Operating

16 Basic Operations
16 – CD/ USB Operations
17 – Selecting a folder and a MP3/ WMA file
17 – Deleting a MP3/ WMA file
17 Other Operations
17 – Programmed Playback
17 – Turn off the sound temporarily
18 – AUTO DJ playback
18 – Displaying file information (ID3 TAG)
18 – DEMO
19 – VOCAL FADER
19 – Using Microphone
19 Radio Operations
19 – Listening to the radio
20 – Presetting the Radio Stations
20 – Deleting all the saved stations
20 – Improving poor FM reception
20 Sound adjustment
20 – Setting the surround mode
21 – Setting the USER EQ
21 Setting the Clock
21 – Using your player as an alarm clock
22 – Sleep Timer Setting
22 – Dimmer
22 Advanced Operations
22 – Playing the iPod
23 – Compatible iPod
24 – Listening to music from your portable player or external device
24 – Changing the lighting effect
24 – Changing the woofer lighting
24 – On/ off the woofer power
24 – Recording to USB
24 – To select recording bit rate and speed
25 – Dubbing USB to USB

4 Troubleshooting

26 Troubleshooting
26 – General

5 Appendix

27 Trademarks and Licenses
28 General specifications
29 Speaker specifications
30 Maintenance
30 – Notes on Discs
30 – Handling the Unit

Unique Features

Portable In

Listens to music from your portable device. (MP3, Notebook, etc)

USB Direct Recording

Records music to your USB device.

Beat lighting

Listens to music with special lighting effect.

Accesories

Please check and identify the supplied accessories.

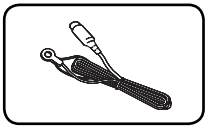

FM Antenna (1)

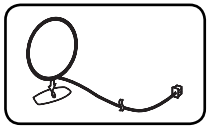

AM Antenna (1)

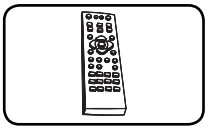

Remote Control (1)

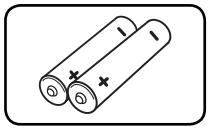

Batteries (2)

Playable file Requirement

MP3/ WMA music file requirement

MP3/ WMA file compatibility with this unit is limited as follows :

- Sampling frequency : within 32 to 48 kHz (MP3), within 32 to 48 kHz (WMA)
- Bit rate : within 32 to 320 kbps (MP3), 40 to 192 kbps (WMA)
- Maximum files : Under 999
- File extensions : ".mp3"/ ".wma"
- CD-ROM file format : ISO9660/ JOLIET
- We recommend that you use Easy-CD Creator, which creates an ISO 9660 file system.

Compatible USB Devices

- MP3 Player : Flash type MP3 player.
- USB Flash Drive :
  Devices that support USB2.0 or USB1.1.
- The USB function of this unit does not support all USB devices.

USB device requirement

- Devices which require additional program installation when you have connected it to a computer, are not supported.
- Do not extract the USB device while in operation.
- For a large capacity USB, it may take longer than a few minute to be searched.
- To prevent data loss, back up all data.
- If you use a USB extension cable or USB hub, the USB device is not recognized.
- Using NTFS file system is not supported. (Only FAT(16/ 32) file system is supported.)
- This unit is not supported when the total number of files is 1 000 or more.
- External HDD, Card readers, Locked devices, or hard type USB devices are not supported.
- USB port of the unit cannot be connected to PC. The unit cannot be used as a storage device.

Remote control

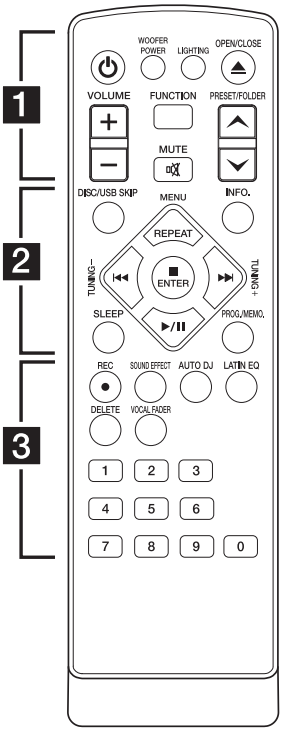

1

⏻ **(POWER):** Switches the unit ON or OFF.

WOOFER POWER: Switches the woofer ON or OFF.

LIGHTING: Changes lighting effects.

⏏ **OPEN/CLOSE:** Opens and closes the disc tray.

VOLUME +/-: Adjusts speaker volume.

FUNCTION: Selects the function and input source.

🔇 **MUTE:** Mutes the sound.

PRESET/FOLDER ∧/∨: Searches for a folder of MP3/ WMA files. When a CD/ USB containing MP3/ WMA files in several folders is being played, press **PRESET/FOLDER ∧/∨** selects to the folder you want to play. Choose a 'preset number' for a radio station.

2

DISC/USB SKIP: Chooses a desired CD or USB.

INFO.: Checks information about your music. MP3 files often come with tags. The tag gives the Title, Artist, Album or Time information.

REPEAT (MENU):
- Listens to your tracks repeatedly or randomly.
- Move to the previous menu(iPod).

TUNING -/+: Selects the radio station.

⏮/⏭ (Skip/Search):
- Skips Fast backward or Forward.
- Searches for a section within a track.

►/II (Play/Pause): Starts or pauses playback.

■ **ENTER:** Stops or choose an item.

SLEEP: Sets the system to turn off automatically at a specified time. (Dimmer : The display window will be darkening by half.)

PROG./MEMO.:

- For storing radio stations if you have saved radio stations using **PROG./MEMO.** , you can scroll through them and select one.
- Listens to your tracks in any order.

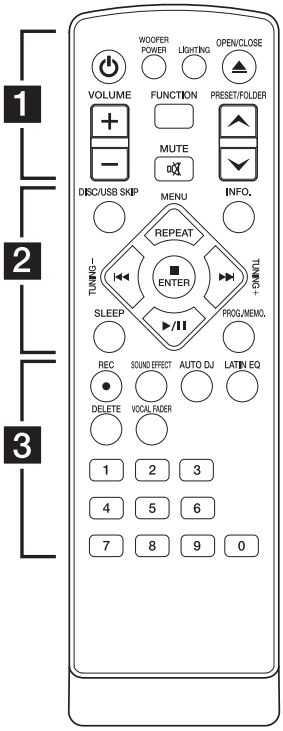

3

- **REC:** USB direct recording.

SOUND EFFECT: Chooses sound impressions.

AUTO DJ: Selects the AUTO DJ mode. (For more information refer to the page 18)

LATIN EQ: Chooses latin equalizer.

DELETE: Deletes MP3/ WMA files.

VOCAL FADER: You can enjoy the function as karaoke, by reducing singer vocal of music in the various sources.

0 to 9 numerical buttons: Selects numbered tracks, files, or preset number.

Battery Installation

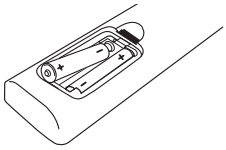

Remove the battery cover on the rear of the Remote Control, and insert two (size AAA) batteries with ⊕ and ⊖ matched correctly.

Front panel

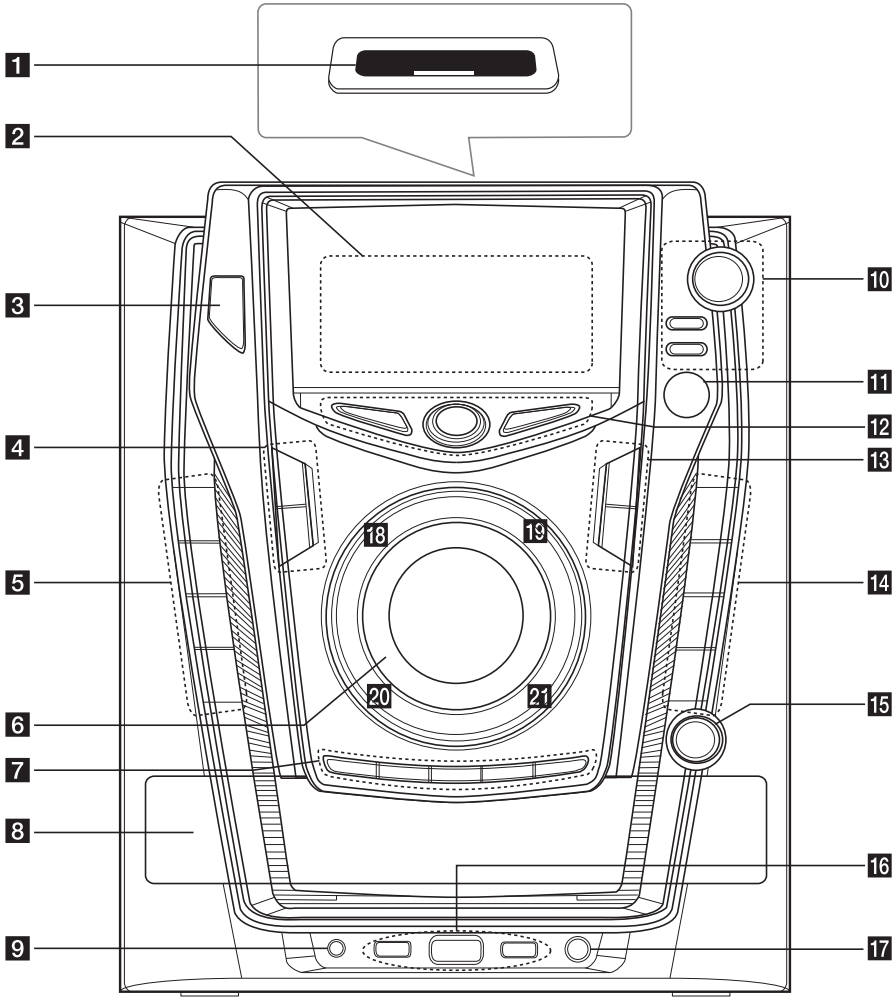

1 **iPod dock**

2 **Display window**

3 **⏻/I (Power)**

4 **TIMER**
With the TIMER function you can turn CD, USB play and TUNER reception on or off at a desired time.

CLOCK
For setting the clock and checking the time.

5 **CD/USB**
Selects the CD or USB function.

TUNER
Selects the TUNER function.

IPOD/ AUX
Selects the iPod or AUX function.

PORT. IN
Selects the PORT. IN function.

6 **VOLUME**
Adjusts speaker volume.

7 **DISC / USB SKIP**
Chooses a desired CD or USB.

DISC 1/ DISC 2/ DISC 3
You can directly select a desired CD.

OPEN/CLOSE

8 **Disc tray**

9 **PORT. IN jack**

10 **FILE SEARCH**
Moves to the another file/ track or you can select the tuning range.

FOLDER
Moves to folder and file selection mode.

DELETE
Deletes MP3/ WMA files.

11 **Remote control sensor**

12 **LATIN EQ**
Chooses locally special equalizer.

AUTO DJ
Selects the AUTO DJ mode. (For more informaion refer to the page 18)

BASS BLAST
Reinforces the treble, bass or surround effect.

13 **SET**
Confirms the setting.

USER EQ
Controls sound register.

14 **SOUND EFFECT**
Chooses sound impressions.

LIGHT EFFECT
Changes lighting effects.

SUBWOOFER - LIGHTING / DEMO
Changes subwoofer's lighting effect/ show demo.

VOCAL FADER
You can enjoy the function as karaoke, by reducing singer vocal of music in the various sources.

15 **MIC VOL.**

16 **USB Ports**
You can play or recoding sound files by connecting the USB device.

REC. TO USB 2
Recoding to USB.

17 **MIC jack**

18 **□**
Stops playback or cancel.

19 **>II, ST. / MONO**
Starts or pauses playback. Selects Mono/ Stereo.

20 **I<<**
Prev./ Scan

21 **>>I**
Next/ Scan

Rear panel

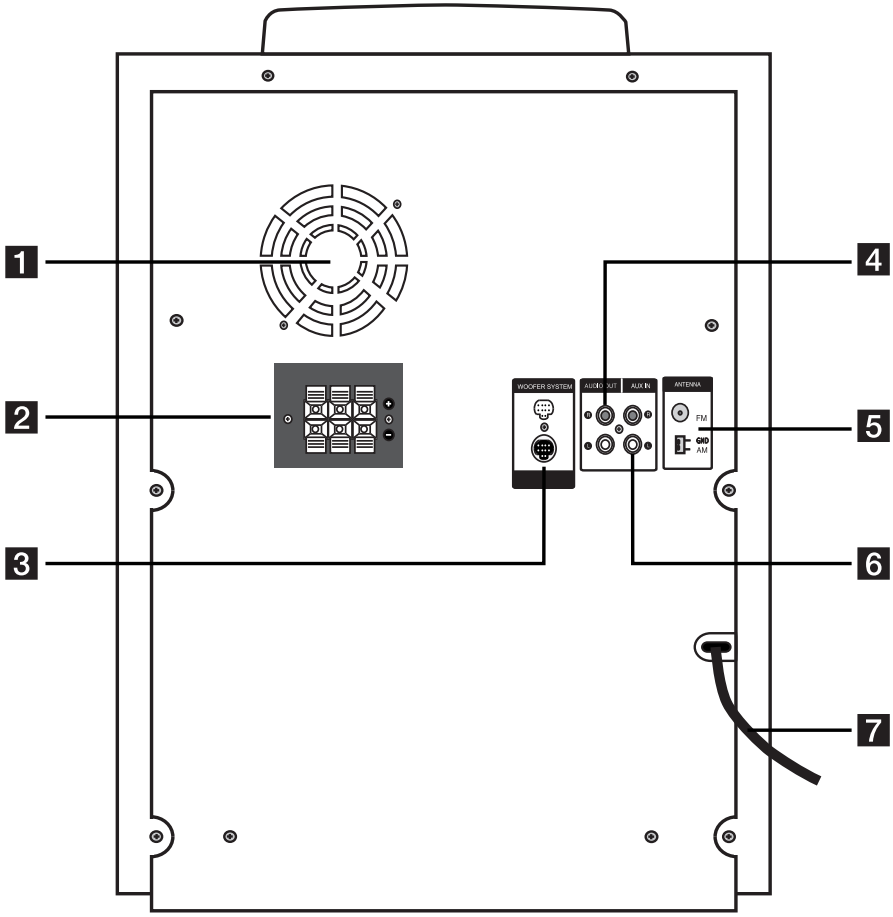

1 Cooling fan
2 Speaker terminal
3 WOOFER SYSTEM connectors (woofer light cable)
4 AUDIO OUT connetors
5 ANTENNA (FM, AM)
6 AUX IN connectors
7 Power cord

Connecting to speakers

Attaching the speakers to the unit

To connect the cable to the unit, press each plastic finger pad to open the connection terminals on the unit. Insert the wire and release the finger pad.

Connect the black stripe of each wire to the terminals marked - (minus) and the other end to the terminals marked + (plus).

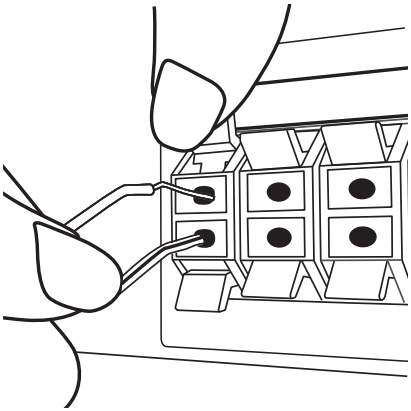

Color	Speaker	Position
Orange	Sub woofer	Any of position
Red	Front	Front right
White	Front	Front left

Caution

- Be careful to make sure children not to put their hands or any objects into the *speaker duct.
  *Speaker duct: A hole for plentiful bass sound on speaker cabinet (enclosure).
- The speakers contain magnet parts, so color irregularity may occur on the TV screen or PC monitor screen. Please use the speakers far away from either TV screen or PC monitor.
- Make sure to install the speaker with other people in order to prevent it from falling and causing injuries to the installer.

Attaching the woofer cables to the unit

To connect the woofer cable(woofer light cable) to the unit, insert the cable to WOOFER SYSTEM connectors on the unit.

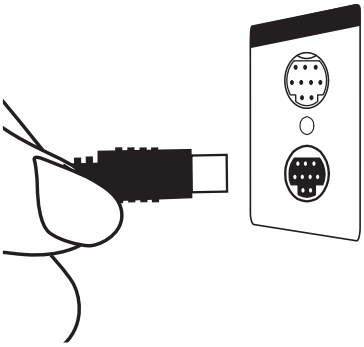

Caution

- Make sure arrows on the ends of cables should be toward the to upper side.
- Make sure to connect the cables to connectors tightly on the unit.

Optional Equipment Connection

AUX IN Connection

Connect an output of auxiliary device(Camcoder, TV, Player, etc) to the AUX IN (L/R) connector.

If your device has only one output for audio(mono), connect it to the left (white) audio jack on the unit.

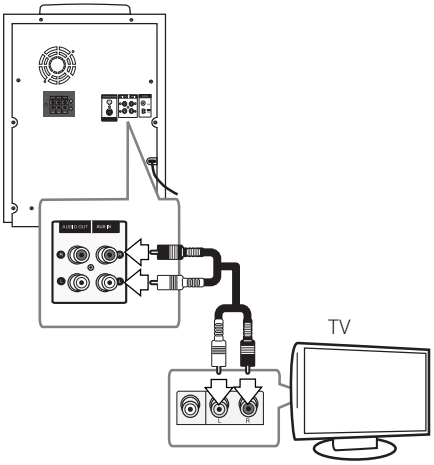

PORT. IN Connection

Connect an output (earphone or line out) of portable device (MP3 or PMP etc) to the PORT. IN connector.

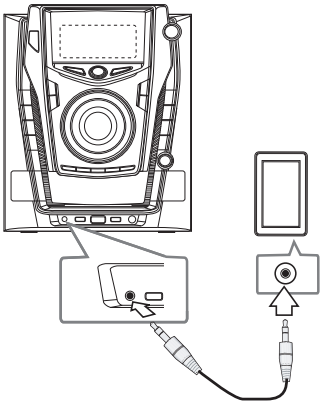

AUDIO OUT connection

You can connect another device.

Connect the left and right AUDIO OUT jacks of the unit to the audio left and right jacks on another device using the audio cables.

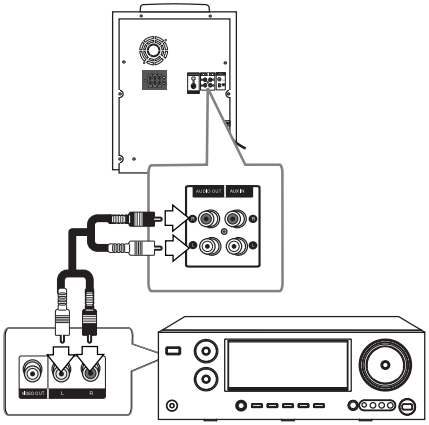

USB Connection

Connect the USB port of USB Memory (or MP3 player, etc.) to the USB port on the front of the unit.

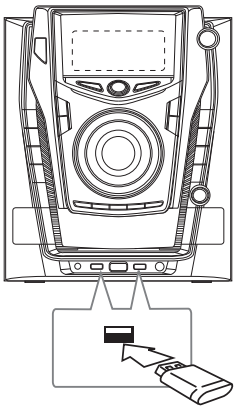

Note

- Removing the USB Device from the unit
  1. Choose a different function/ mode or press ■ **ENTER** on the remote control or ☐ on the unit twice in a row.
  2. Remove the USB device from the unit.
- You can only recharge your iPod through USB port. To listen to music on iPod, refer to the page 22.

Antenna Connection

Connect the supplied FM/ AM antenna for listening to the radio.

Connect the AM loop antenna to the AM antenna connector. (A)

Connect the FM wire antenna to the FM antenna connector. (F)

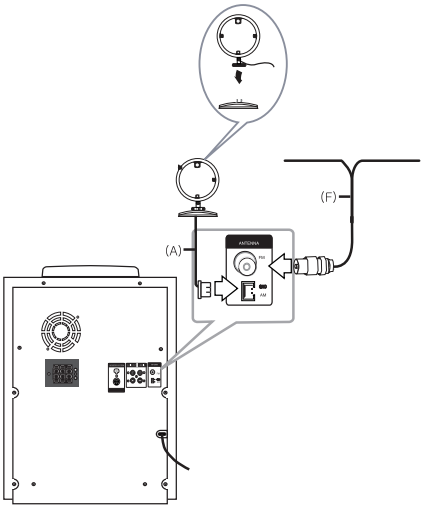

Note

- To prevent noise pickup, keep the AM Loop antenna away from the unit and other components.
- Be sure to fully extend the FM wire antenna. After connecting the FM wire antenna, keep it horizontal.

Basic Operations

CD/ USB Operations

1. Insert the disc by pressing ⏏ **OPEN/CLOSE** or connect the USB device to the USB port.
2. Select the **CD** or **USB** function by pressing **FUNCTION** on the remote control or **CD**/**USB** on the unit.
3. Select the disc by pressing **DISC/USB SKIP, DISC1, DISC 2, DISC 3** on the unit or **DISC/USB SKIP** on the remote control.

To	Do this
Stop	Press ■ **ENTER** on the remote control or ☐ on the unit.
Playback	Press ►/II on the remote control or >II on the unit.
Pause	Press ►/II on the remote control or >II on the unit.
Searching for a section within a track	Press I◄◄/►►I on the remote control or I<< / >>I on the unit during playback and release it at the point you want to listen to.
Selecting files or tracks directly	Press **0 to 9 numerical buttons** on the remote control to go to the desired file or track directly.
Skipping to the next/ previous track/ file	During playback, press or rotate; (1) to go to the next track/ file: - On the remote control: ►►I - On the unit: **FILE SEARCH** or >>I (2) to go back to the previous track/ file or to return to the beginning of current track/file: - On the remote control: I◄◄ - On the unit: **FILE SEARCH** or I<<
Playing repeatedly or randomly	Press **REPEAT** on the remote control repeatedly. Refer to the note for details about the display change.

Note

The display changes in the following order,

USB	MP3/ WMA CD	Audio CD
REPEAT TRK	REPEAT TRK	REPEAT TRK
REPEAT DIR	REPEAT DIR	-
-	REPEAT CD	REPEAT CD
REPEAT ALL	REPEAT ALL	REPEAT ALL
RANDOM	RANDOM	RANDOM
OFF	OFF	OFF

Selecting a folder and a MP3/ WMA file

On the unit

1. Press **FOLDER** and rotate **FILE SEARCH** until a desired folder appears.
2. Press **FILE SEARCH** or **>II**.
3. If you want to move to the upper folder, press **FOLDER**.
4. Rotate **FILE SEARCH** until a desired file appears. Press **>II** to play it.

On the remote control

1. Press **PRESET/FOLDER ∧/∨** repeatedly until a desired folder appears.
2. Press **►/II** to play it. The first file of folder will play.

Deleting a MP3/ WMA file

You can delete file, folder or format by pressing **DELETE**. (USB only)

1. Press **DELETE** repeatedly during selecting the MP3/ WMA file. This function is supported only in stop status. The display changes in the following order.

   - DELETE? : deletes file
   - DEL FOLDER : deletes folder
   - FORMAT? : formats USB

2. To delete file/ folder or format, press **►/II** on the remote control or press **>II** on the unit.
3. If you want to exit the current mode, press **■ ENTER** on the remote control or press **□** on the unit.

Caution

- Do not extract the USB device during operation.(play, delete, etc.)
- Regular back up is recommended to prevent data loss.
- The delete function may not be supported according to the USB status. (lock, etc.)

Other Operations

Programmed Playback

The program function enables you to store your favorite files from any disc or USB device.

A program can contain 20 tracks.

1. Insert a CD or USB and wait for it to be order.
2. Press **PROG./MEMO.** on the remote control in stop status.
3. Press or rotate to select a track;

   - On the remote control: **I◄◄/►►I**
   - On the unit: **FILE SEARCH** or **I<</>>I**

4. Press **PROG./MEMO.** again to save and select a next track.
5. Press **►/II** to play the programmed music files.
6. To clear your selection, press **■ ENTER** twice.

Note

The programs are also cleared when the disc or USB device is removed, the unit is powered off or the function is switched to others.

Turn off the sound temporarily

Press **MUTE** to mute your unit.

You can mute your unit, for example, to answer the telephone, the mute icon "X" is blinked in the display window.

AUTO DJ playback

Auto DJ blends the end of one song into the beginning of another for seamless playback. It equalizes volume across tracks for uninterrupted playback.

Press **AUTO DJ** on the remote control or unit repeatedly, the display changes as followings.
RANDOM (AUTO DJ RANDOM) -> REPEAT DISC/ ALL (AUTO DJ SEQUENTIAL) -> (AUTO DJ OFF)

Mode	Display Window	Description
OFF	- (AUTO DJ OFF)	-
RANDOM	RANDOM (AUTO DJ RANDOM)	The music is played randomly on this mode.
REPEAT	REPEAT DISC/ ALL (AUTO DJ SEQUENTIAL)	The music is played repeatedly on this mode.

Note

- Searching for a section within a track or playing repeatedly or randomly is not supported on the AUTO DJ mode.
- During AUTO DJ mode, press **PRESET/FOLDER ∧/∨** on the remote control or **FOLDER** on the unit is not available.
- If you move to other functions or stop the music using ☐ on the unit (or ■ **ENTER** on the remote control) on AUTO DJ mode, AUTO DJ function will be disable.
- AUTO DJ function is not supported in the music file whose length is less than 60 seconds.
- During recording, AUTO DJ function is not available.
- If you change a disc while the AUTO DJ function is activated, the function is deactivated.

Displaying file information (ID3 TAG)

While playing an MP3 file containing file information, you can display the information by pressing **INFO.**

DEMO

In the power off state, it demonstrates the function on display window by pressing **SUBWOOFER - LIGHTING/ DEMO**. To cancel the DEMO, press it again.

Note

- While DEMO, this unit will keep DEMO status even if you unplug the power cord connection.
- You can enjoy other functions during the DEMO. Then the DEMO will pause to temporary.
  - Without input key in 10 sec, the DEMO will play back automatically.

VOCAL FADER

You can enjoy the function as karaoke by reducing singer vocal of music in the various sources. (MP3/ WMA/ CD/ etc.) Press the **VOCAL FADER**.

To cancel it, press **VOCAL FADER** again.

- The quality of the VOCAL FADER may be different depending on the recording conditions of music files.

Using Microphone

1. Connect your microphone to the **MIC jack**.
2. Play the music you want.
3. Sing along with the accompaniment. Adjust the microphone volume by rotating **MIC VOL** clockwise or unclockwise on the unit.

Note

- When not using the microphone, set the **MIC VOL** to minimum or turn off the MIC and remove the microphone from the **MIC jack**.
- If the microphone is set too near the speaker, a howling sound may be produced. In this case, move the microphone away from the speaker or decrease the sound level by using the **MIC VOL**.
- If sound through the microphone is extremely loud, it may be distorted. In this case, rotate **MIC VOL** to minimum.

Radio Operations

Be sure that both FM and AM aerials are connected. (Refer to the page 15)

Listening to the radio

1. Press **FUNCTION** until FM or AM appears in the display window.
   The last received station is tuned in.
2. Press and hold **TUNING -/+** for about two seconds until the frequency indication starts to change, then release. Scanning stops when the unit tunes in a station.

   Or

   Press **TUNING -/+** repeatedly.
3. Adjust the volume by rotating **VOLUME** on the unit or by pressing **VOLUME +/-** on the remote control repeatedly.

Presetting the Radio Stations

You can preset 50 stations for FM and AM.

Before tuning, make sure to turn down the volume.

1. Press **FUNCTION** until FM or AM appears in the display window.
2. Press to select a desired frequency;

   - On the remote control: **TUNING** -/+
   - On the unit: **|<</>>|**
3. Press **PROG./MEMO.** a preset number will flash in the display window.
4. Press **PRESET/FOLDER ∧/∨** to select the preset number you want.
5. Press **PROG./MEMO.** The station is stored.
6. Repeat steps 2 to 5 to store other stations.
7. To listen a preset station, press **PRESET/FOLDER ∧/∨** or 0 to 9 numerical buttons.

Deleting all the saved stations

1. Press and hold **PROG./MEMO.** for two seconds. "ERASE ALL" will flash up on the unit display.
2. Press **PROG./MEMO.** to erase all saved radio stations.

Improving poor FM reception

Press **>II ST. / MONO** on the unit or **►/II** on the remote control. This will change the tuner from stereo to mono and usually improve the reception.

Sound adjustment

Setting the surround mode

This system has a number of pre-set surround sound fields. You can select a desired sound mode by using **SOUND EFFECT**.

The displayed items for the Equalizer may be different depending on sound sources and effects.

On Display	Description
NATURAL	You can enjoy comfortable and natural sound.
Local Specialization equalizer	Regionally optimized sound effect. (FORRO/ FUNK/ SERTANEJO/ DANGDUT/ ARABIC/ PERSIAN/ INDIA/ REGUETON/ MERENGUE/ SALSA/ SAMBA/ CUMBIA/ AFRO)
AUTO EQ	Realizes the sound equalizer that is the most similar to the genre of which is included in the MP3 ID3 tag of song files.
POP CLASSIC JAZZ ROCK	This program lends an enthusiastic atmosphere to the sound, giving you the feeling you are at an actual rock pop, jazz or classic concert.
MP3 - OPT	This function is optimized for compressible MP3 file. It improves the treble sound.
BASS BLAST	Reinforces the treble, bass and surround sound effect.
LOUDNESS	Improves the bass and treble sound.
VIRTUAL	You can enjoy more virtual surround sound.
BYPASS	You can enjoy the sound without equalizer effect.

Note

- On some speakers, sound may not be heard or heard in low sound depending on the sound mode.
- Maybe you need reset the surround mode, after switching the input, sometimes even after the sound track changed.
- By pressing **BASS BLAST** on the unit you can directly select the BYPASS or BASS BLAST sound.

Setting the USER EQ

You can listen to music with the desired sound effect by adjusting the BASS, MIDDLE and TREBLE.

1. Press **USER EQ.**
   "USER EQ" is displayed.
2. Press **SET** to enter the **USER EQ**.
3. Select the BASS, MIDDLE or TREBLE sound effect you want by rotating **FILE SEARCH**.
4. Press **|<</>>|** to select the sound level you want.
5. To finish the setting, press **SET**.

Setting the Clock

1. Turn the unit on.
2. Press **CLOCK** for at least 2 seconds.
3. Choose time mode by pressing **|<</>>|**.
   - AM 12:00 (for an AM and PM display) or 0:00 (for a 24 hour display)
4. Press **SET** to confirm your selection.
5. Select the hours by pressing **|<</>>|**.
6. Press **SET**.
7. Select the minutes by pressing **|<</>>|**.
8. Press **SET**.

Using your player as an alarm clock

1. Turn the unit on.
2. Press **TIMER**. Each functions flashes.
3. Press **SET** when the function you want to be woken by is showing.
4. "ON TIME" will be displayed. This is your desired time to unit turns on. Press **|<</>>|** to change the hours and minutes and press **SET** to save.
5. The "OFF TIME" will be displayed. This is your desired time to unit turns off.
6. Press **|<</>>|** to change the hours and minutes and press **SET** to save.
7. Press **|<</>>|** to change the volume and press **SET** to save. The clock icon "◷" shows that the alarm is set.
8. Press **TIMER** button 2 times. You can check the setting status.

Note

- If you set the clock time, you can check the time by pressing **CLOCK** even when the player is turned off.
- If you set the clock time and alarm, you can check the alarm icon "◷" by pressing **CLOCK** even when the player is turned off.
- If you set the clock time and alarm, you can check the alarm icon "◷" and setting informaiton by pressing **TIMER** even when the unit is turned off.

Sleep Timer Setting

Press **SLEEP** repeatedly to select delay time between 10 and 180 minutes. After the delay time, unit will turn off.

To cancel the sleep function, press **SLEEP** repeatedly until "SLEEP 10" appears, and then press **SLEEP** once again while "SLEEP 10" is displayed.

Note

- You can check the remaining time before the unit turns off.
- Press **SLEEP**. The remaining time appears in the display window.

Dimmer

Press **SLEEP** once. The display window will be darkening by half. To cancel it, press **SLEEP** repeatedly until dim off.

Advanced Operations

Playing the iPod

You can enjoy the sound with your iPod. For details about iPod, refer to the iPod User Guide.

1. Connect the iPod firmly.

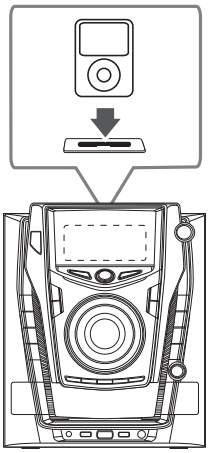

   If you turn this unit on, your iPod is automatically turned on and recharging starts.

2. Press **AUX/iPod/PORT. IN** on the unit or **FUNCTION** on the remote control to select iPod function. You can operate your iPod through an iPod's display by using the supplied remote control and also control on your iPod.

To	Do this	
	ON UNIT	ON REMOTE
Pauses or restart	>II	►/II
Skip	I<<</>>I	I◄◄/►►I
Search	Press and hold I<<</>>I	Press and hold I◄◄/►►I
Move to the previous menu	-	REPEAT (MENU)
Move to the desired item	-	PRESET/ FOLDER ∧/∨
Chooses a item	□	■ ENTER

Compatible iPod

- We recommend installing the latest software version.
- The unit supports the models as follows:
  iPod nano 1 G, 2 G, 3 G, 4 G, 5 G, 6 G/
  iPod classic/ iPod 4 G, 5 G/
  iPod touch 2 G, 3 G, 4 G/ iPhone 3 G, 4.
  For some models, the unit may not operate depending on the firmware version.
- Depending on your iPod's software version, you may not control your iPod from the player.

Note

- If this unit displays an error message, follow the message. An error message "ERROR".
  - Your iPod is not connected firmly.
  - This unit recognizes your iPod as an unknown device.
  - Your iPod is exceptionally low in power.
  - ➡ The battery needs to be charged.
  - ➡ If you charge the battery while iPod is extremely low in power, it may take longer to be charged.
- iPod does not support recording function when connected.
- Depending on your iPod's software version, it may not be possible to control your iPod from this unit. We recommed installing the latest software version.
- If you use an application, make a call, or send and receive SMS text message, etc. on iPod touch or iPhone, disconnect it from iPod dock of this unit and then use it.
- If you have a problem with your iPod, please visit www.apple.com/support/ipod.

Listening to music from your portable player or external device

The unit can be used to play the music from many types of portable player or external device. (Refer to the page 14)

1. Connect the portable player to the **PORT. IN** (PORTABLE IN) connector of the unit.

   Or

   Connect the external device to the AUX IN connector of the unit.
2. Turn the power on by pressing ⏻/I.
3. Select the PORTABLE or AUX function by pressing **FUNCTION** on the remote control or **AUX/ iPod**, **PORT. IN** on the unit.
4. Turn the portable player or external device and start it playing.

Changing the lighting effect

You can change the unit's lighting effects by pressing **LIGHTING** on the remote control or **LIGHT EFFECT** on the unit in 5 types. (Forward Level Mode/ Peak Level Mode/ Center Level Mode/ Reverse Level Mode/ Shower Level Mode)

Changing the woofer lighting

You can change the woofer's lighting effects in 5 types by pressing **SUBWOOFER - LIGHTING/ DEMO**. (Default On LED/ Level Meter LED/ Sound Detect LED/ Level Reverse LED/ Always On LED)

On/ off the woofer power

You can power on or off the woofer by pressing **WOOFER POWER** on the remote control.

Recording to USB

You can record a various sound source to USB.

1. Connect the USB device to the unit.
2. Select a function in which you want to record by using **CD/USB, TUNER** on the unit or **FUNCTION** on the remote control.

   One track recording - You can record to USB after playing a file you want.

   All tracks recording - You can recording to USB after stop.

   Program list recording - After showing the programmed list, you can record it to USB.
3. Press **REC. TO USB 2** on the unit or ● **REC** on the remote control.
   - If you connect both of **USB1** and **USB2**, press **>II** to record to **USB1** and press □ to record to **USB2**.
4. To stop recording, press □ on the unit or ■ **ENTER** on the remote control.

To select recording bit rate and speed

1. Press **REC. TO USB 2** on the unit or ● **REC** on the remote control for longer than 3 seconds.
2. Press to select a bit rate;

   - On the remote control: **I◀◀/▶▶I**
   - On the unit: **I<</>>I**
3. Press **REC. TO USB 2** on the unit or ● **REC** on the remote control again to select the recording speed.
4. Press to select a desired recording speed; (Only AUDIO CD)

   - On the remote control: **I◀◀/▶▶I**
   - On the unit: **I<</>>I**

   X1 SPEED
   - You can listen to music while recording it.

   X2 SPEED
   - You can just record the music file.
5. Press **REC. TO USB 2** on the unit or ● **REC** on the remote control to finish the setting.

Dubbing USB to USB

You can do dubbing a various sound source in **USB1** to **USB2** on **USB** function.

1. Connect a USB device including desired sound files to **USB1**.
2. Connect an USB device to **USB2**.
3. Press **REC. TO USB 2** on the unit or ● **REC** on the remote control.
4. To stop recording, press ☐ on the unit or ■ **ENTER** on the remote control.

Pausing recording

During recording, press **REC. TO USB2** on the unit or ● **REC** on the remote control to pause recording. Press it again to restart recording. (Only Radio/ AUX/ Portable)

Note

- You can check the recording percentage rate for the USB record on the display window during the recording. (MP3/ WMA CD Only)
- During recording MP3/ WMA, there is no sound.
- When you stop recording during playback, the file that has been recorded at that time will be stored. (AUDIO CD Only)
- Do not remove the USB device or turn off the unit during USB recording. If not, an incomplete file may be made and not deleted on PC.
- If USB recording does not work, the message like "NO USB", "ERROR", "USB FULL" or "NO REC" is displayed on the display window.
- Multi card reader device or External HDD can not be used for USB recording.
- A file is recorded by about 512 Mbyte when you record for a long term.
- When you stop recording during playback, the file will not be stored.
- You may not store more than 999 files.
- It'll be stored as follows.

AUDIO CD	MP3/ WMA	The other source*
CD_REC TRK_001 TRK_002 ⋮	FILE_REC ABC(File name) DEF(File name) ⋮	EXT_REC AUDIO_001 AUDIO_002 ⋮

* : TUNER, AUX, Poratable and the like.

The making of unauthorized copies of copy-protected material, including computer programs, files, broadcasts and sound recordings, may be an infringement of copyrights and constitute a criminal offense. This equipment should not be used for such purposes.
Be responsible
Respect copyrights

Troubleshooting

General

Symptom	Cause & Solution
No Power.	• The power cord is not plugged in. Plug in the power cord. • Check whether electricity failed. Check the condition by operating other electronic devices.
No sound.	• Check whether you select right function. Press FUNCTION and check the selected function. • If not, connect speaker cables correctly. Speaker cables connected correctly.
The unit does not start playback.	• An unplayable disc is inserted. Check the playable disc. • No disc is inserted. Insert a disc. • The disc is dirty. Clean the disc. (Refer to the 30 page) • The disc is inserted upside down. Place the disc with the label or printed side facing upwards.
Radio stations cannot be tuned in properly.	• The antenna is positioned or connected poorly. Connect the antenna securely. • The signal strength of the radio station is too weak. Tune to the station manually. • No stations have been preset or preset stations have been cleared (when tuning by scanning preset channels). Preset some radio stations, see page 20 for details.
The remote control does not work properly.	• The remote control is too far from the unit. Operate the remote control within about 23 ft (7 m). • There is an obstacle in the path of the remote control and the unit. Remove the obstacle. • The batteries in the remote control are exhausted. Replace the batteries with new ones.
iPod does not work.	• Check whether the player is connected to the unit correctly. Connect it to the unit correctly.
Sub woofer does not work.	• Check whether the woofer is connected to the unit correctly. Connect cables to the unit correctly. (Refer to the 13 page) • Press WOOFER POWER and check the woofer status.

Trademarks and Licenses

Made for iPod iPhone

iPod is a trademark of Apple Inc., registered in the U.S. and other countries.
iPhone is a trademark of Apple Inc. "Made for iPod" and "Made for iPhone" mean that an electronic accessory has been designed to connect specifically to iPod or iPhone respectively, and has been certified by the developer to meet Apple performance standards. Apple is not responsible for the operation of this device or its compliance with safety and regulatory standards.
Please note that the use of this accessory with iPod, iPhone may affect wireless performance.

Plays Windows Media™

General specifications

General	
Power requirements	Refer to main label
Power consumption	Refer to main label
Dimensions (W x H x D)	285 x 350 x 380 mm without foot
Net Weight (Approx.)	6.6 kg
Operating temperature	5 °C to 35 °C (41 °F to 95 °F)
Operating humidity	5 % to 90 %
Bus Power Supply	USB DC 5 V ⎓ 500 mA iPod DC 5 V ⎓ 1 A

Inputs/ Outputs	
ANALOG AUDIO IN	1.2 Vrms (1 kHz), 600 Ω, RCA jack (L, R) x 1
PORT. IN	0.5 Vrms (3.5 mm stereo jack)
ANALOG AUDIO OUT	800 mVrms (1 kHz), 600 Ω, RCA jack (L, R) x 1

Tuner	
FM Tuning Range	87.5 to 108.0 MHz or 87.50 to 108.00 MHz
AM Tuning Range	522 to 1 620 kHz, 520 to 1 710 kHz or 522 to 1 710 kHz

Amplifier		
Stereo mode	200 W + 200 W (4 Ω at 1 KHz)	
Surround mode	Front	200 W + 200 W (4 Ω at 1 KHz, THD 10 %)
	Subwoofer	200 W (4 Ω at 60 Hz, THD 10 %)

CD	
Frequency Response	40 to 20 000 Hz
Signal-to-noise ratio	75 dB
Dynamic range	80 dB

Speaker specifications

Front speaker	
Type	2 Way 2 speaker
Impedance	4 Ω
Rated Input Power	200 W
Max. Input power	400 W
Net Dimensions (W x H x D)	239 x 400 x 335 mm
Net Weight	5 kg

Passive subwoofer	
Type	1 Way 1 speaker
Impedance	4 Ω
Rated Input Power	200 W
Max. Input power	400 W
Net Dimensions (W x H x D)	272 x 333 x 365 mm
Net Weight	6 kg

- Design and specifications are subject to change without notice.

Maintenance

Notes on Discs

Handling Discs

Never stick paper or tape on the disc.

Storing Discs

After playing, store the disc in its case. Do not expose the disc to direct sunlight or sources of heat and never leave it in a parked car exposed to direct sunlight.

Cleaning Discs

Do not use strong solvents such as alcohol, benzine, thinner, commercially available cleaners, or anti-static spray intended for older vinyl records

Handling the Unit

When shipping the unit

Please save the original shipping carton and packing materials. If you need to ship the unit, for maximum protection, re-pack the unit as it was originally packed at the factory.

Keeping the exterior surfaces clean

Do not use volatile liquids such as insecticide spray near the unit.

Wiping with strong pressure may damage the surface.

Do not leave rubber or plastic products in contact with the unit for a long period of time.

Cleaning the unit

To clean the player, use a soft, dry cloth. If the surfaces are extremely dirty, use a soft cloth lightly moistened with a mild detergent solution. Do not use strong solvents such as alcohol, benzine, or thinner, as these might damage the surface of the unit.

Maintaining the Unit

The unit is a high-tech, precision device. If the optical pick-up lens and disc drive parts are dirty or worn, the picture quality could be diminished. For details, please contact your nearest authorized service center.

Atención al Cliente

País	Teléfono	País	Teléfono
México	01-800-347-1919	Costa Rica	1-800-507-5454
Colombia	01-8000-910683	Rep. Dominicana	00-800-751-5454
Chile	800-26-1054	Guatemala	1-801-422-5454
Ecuador	1-800-545454	El Salvador	00-800-6309
Venezuela	800-5424477	Cuba	204-3333
Panamá	800-5454	Miami, USA	1-305-477-1882
Perú	0-800-1-2424	Bolivia, La Paz	800-100-545
Puerto Rico	001-800-510-9564	Nicaragua	001-800-507-0007
Argentina	0800-888-5454 (Capital y GBA) / 0810-555-5454 (Interior del país)		

LG www.lgservice.com