LG
Life's Good

OWNER'S MANUAL

MICROWAVE OVEN WITH GRILL

Please read this owner's manual thoroughly before operating.

MS2839AC	MH6839AC
MS2839ACS	MH6839ACS
MS2839ACK	MH6839ACK

P/No.:

www.lg.com

CONTENTS

How the Microwave Function Works

Microwaves are a form of energy similar to radio, television waves, and ordinary daylight. Normally, microwaves spread outwards as they travel through the atmosphere and disappear without effect. This oven, however, has a magnetron that is designed to make use of the energy in microwaves. Electricity, supplied to the magnetron tube, is used to create microwave energy.

These microwaves enter the cooking area through openings inside the oven. A tray is located inside the oven. Microwaves cannot pass through metal walls of the oven, but they can penetrate such materials as glass, porcelain and paper, the materials out of which microwave-safe cooking dishes are constructed.

Microwaves do not heat cookware, though cooking vessels will eventually get hot from the heat generated by the food.

A very safe appliance

Your Microwave oven, is one of the safest of all home appliances. When the door is opened, the oven automatically stops producing microwaves. Microwave energy is converted completely to heat when it enters food, leaving no "left over" energy to harm you when you eat your food.

NOTE

When the oven is not used, it is recommended to unplug it from the electrical socket.

4 IMPORTANT SAFETY INSTRUCTIONS

8 BEFORE USE

8 Unpacking & Installing
9 Method To Use Accessories As Per Mode
10 Microwave-Safe Utensils
11 Control Panel
13 Setting The Clock
13 Child Lock
13 Quick Start

14 HOW TO USE

14 Microwave Power Cooking
14 Microwave Power Level
15 Weight defrost Cooking
15 Auto defrost
16 Defrosting Guide
17 Steam Chef
18 Steam Chef Guide
19 Grill Cooking (For Grill models)
19 Grill Combi Cooking (For Grill models)

20 FOOD CHARACTERISTICS & MICROWAVE COOKING

23 QUESTIONS & ANSWERS

24 TECHNICAL SPECIFICATIONS

IMPORTANT SAFETY INSTRUCTIONS

Please keep for future reference. Read and follow all instructions before using your oven to prevent the risk of fire, electric shock, personal injury, or damage when using the oven. This guide does not cover all possible conditions that may occur. Always contact your service agent or manufacturer about problems that you do not understand.

WARNING

This is the safety alert symbol. This symbol alerts you to potential hazards that can kill or hurt you and others. All safety messages will follow the safety alert symbol and either the word "WARNING" or "CAUTION". These word means:

WARNING

This symbol will alert you to hazards or unsafe practices which could cause serious bodily harm or death.

CAUTION

This symbol will alert you to hazards or unsafe practices which could cause bodily injury or property damage.

WARNING

1 **Do not attempt to tamper with, or make any adjustments or repairs to the door, door seals, control panel, safety interlock switches or any other part of the oven which would involve the removal of any cover protecting against exposure to microwave energy. Do not operate the oven if the door seals and adjacent parts of the microwave oven are faulty. Repairs should only be undertaken by a qualified service technician.**

- Unlike other appliances, the microwave oven is a high-voltage and a high electrical-current piece of equipment. Improper use or repair could result in harmful exposure to excessive microwave energy or in electric shock.

2 **Do not use the oven for the purpose of dehumidification. (ex. Operating the microwave oven with wet newspapers, clothes, toys, electric devices, pet or child etc.)**

- It can be the cause of serious damage to safety such as a fire, a burn or a sudden death due to an electric shock.

3 **The appliance is not intended for use by young children or elderly persons. Only allow children to use the oven without supervision when adequate instructions have been given so that the child is able to use the oven in a safe way and understands the hazards of improper use.**

- Improper use may cause damage such as a fire, electric shock or burn.

4 **Accessible parts may become hot during use. Young children should be kept away.**

- They may get a burn.

5 **Liquids or other foods must not be heated in sealed containers since they are liable to explode. Remove the plastic wrapping from food before cooking or defrosting. Note though that in some cases food should be covered with plastic film, for heating or cooking.**

- They could burst.

6 **Be certain to use proper accessories on each operation mode, refer to the guide page 9.**
- Improper use could result in damage to your oven and accessories, or could make spark and a fire.

7 **The children should not allow to play with accessories or hang down from the door handle.**
- They may get hurt.

8 **It is hazardous for anyone other than a competent person to carry out any service or repair operation that involves the removal of a cover which gives protection against exposure to microwave energy.**

9 **When the appliance is operated in the combination mode, children should only use the oven under adult supervision due to the temperatures generated.**

⚠ CAUTION

1 **You cannot operate your oven with the door open due to the safety interlocks built into the door mechanism. It is important not to tamper with the safety interlocks.**
- It could result in harmful exposure to excessive microwave energy. (Safety interlocks automatically switch off any cooking activity when the door is opened.)

2 **Do not place any object (such as kitchen towels, napkins, etc.) between the oven front face and the door or allow food or cleaner residue to accumulate on sealing surfaces.**
- It could result in harmful exposure to excessive microwave energy.

3 **Do not operate your oven if it is damaged. It is particularly important that the oven door closes properly and that there is no damage to the: (1) door(bent), (2) hinges and latches (broken or loosened), (3) door seals and sealing surfaces.**
- It could result in harmful exposure to excessive microwave energy.

4 **Please ensure cooking times are correctly set, small amounts of food require shorter cooking or heating time.**
- Over cooking may result in the food catching on fire and subsequent damage to your oven.

5 **When heating liquids, e.g. soups, sauces and beverages in your microwave oven,**
  - **Avoid using straight sided containers with narrow necks.**
  - **Do not overheat.**
  - **Stir the liquid before placing the container in the oven and again halfway through the heating time.**
  - **After heating, let it stand in the oven for a short time; stir or shake it again carefully and check the temperature of it before consuming to avoid burns (especially, contents of feeding bottles and baby food jars).**
- Be careful when handling the container. Microwave heating of beverages can result in delayed eruptive boiling without evidence of bubbling. This could result in hot liquids suddenly boiling over.

6 **An exhaust outlet is located on the top, bottom or side of the oven. Don't block the outlet.**
- It could result in damage to your oven and poor cooking results.

7 **Do not operate the oven when empty. It is best to leave a glass of water in the oven when not in use. The water will safely absorb all microwave energy, if the oven is accidentally started.**
- Improper use could result in damage to your oven.

8 **Do not cook food wrapped in paper towels, unless your cook book contains instructions for the food you are cooking. And do not use newspaper in place of paper towels for cooking.**
- Improper use can cause an explosion or a fire.

9 **Do not use wooden containers and ceramic containers that have metallic (e.g. gold or silver) inlays. Always remove metal twist ties. Check that the utensils are suitable for use in microwave ovens before use.**
- They may heat-up and char. Metal objects in particular may arc in the oven, which can cause serious damage.

10 **Do not use recycled paper products.**
- They may contain impurities which may cause sparks and/or fires when used in cooking.

11 **Do not rinse the tray and rack by placing it in water just after cooking. This may cause breakage or damage.**
- Improper use could result in damage to your oven.

12 **Be certain to place the oven so the front of the door is 8 cm or more behind the edge of the surface on which it is placed, to avoid accidental tipping of the appliance.**
- Improper use could result in bodily injury and oven damage.

13 **Before cooking, pierce the skin of potatoes, apples or any such fruit or vegetables.**
- They could burst.

14 **Do not cook eggs in their shell. Eggs in their shell and whole hardboiled eggs should not be heated in microwave ovens since they may explode, even after microwave heating has ended.**
- Pressure will build up inside the egg which will burst.

15 **Do not attempt deep fat frying in your oven.**
- This could result in a sudden boil over of the hot liquid.

16 **If smoke is observed, switch off or disconnect the oven from the power supply and keep the oven door closed in order to stifle any flames.**
- It can cause serious damage such as a fire or electric shock.

17 **When food is heated or cooked in disposable containers made of plastic, paper or other combustible materials, keep an eye on the oven and check it frequently.**
- Your food may be poured due to the possibility of container deterioration, which also can cause a fire.

18 **The temperature of accessible surfaces may be high when the appliance is operating. Do not touch the oven door, outer cabinet, rear cabinet, oven cavity, accessories and dishes during grill mode, convection mode and auto cook operations, before clearing make sure they are not hot.**
- As they will become hot, there is the danger of a burn unless wearing thick culinary gloves.

19 **The oven should be cleaned regularly and any food deposits should be removed.**
- Failure to maintain the oven in a clean condition could lead to deterioration of the surface. This could adversely affect the life of the appliance and possibly result in a hazardous situation.

20 **If there are heating elements, the appliance becomes hot during use. Care should be taken to avoid touching the heating elements inside the oven.**
- There is danger of a burn.

21 **Follow exact directions given by each manufacturer for their popcorn product. Do not leave the oven unattended while the corn is being popped. If corn fails to pop after the suggested times, discontinue cooking. Never use a brown paper bag for popping corn. Never attempt to pop leftover kernels.**
- Overcooking could result in the corn catching a fire.

22 **This appliance must be earthed.**
The wires in the mains lead are coloured in accordance with the following codes
If the supply cord is damaged, it must be replaced by the manufacturer, a service agent or a similarly qualified person in order to avoid potential hazards.
- Improper use may cause serious electric damage.

23 **Do not use harsh abrasive cleaners or sharp metal scrapers to clean the oven door glass.**
- They can scratch the surface, which may result in the glass shattering.

24 **This oven should not be used for commercial catering purposes.**
- Improper use could result in damage to your oven.

25 **The microwave oven must be operated with the decorative door open.**
- If the door is closed while operating, the airflow will get worse possibly resulting in a fire or damage to your oven and the cabinet.

26 **The connection may be achieved by having the plug accessible or by incorporating a switch in the fixed wiring in accordance with the wiring rules.**
- Using improper plug or switch can cause an electric shock or a fire.

27 **The microwave oven shall be used freestanding.**

28 **This appliance is not intended for use by persons (including children) with reduced physical, sensory or mental capabilities, or lack of experience and knowledge, unless they have been given supervision or instruction concerning use of the appliance by a person responsible for their safety.**

29 **Children should be supervised to ensure that they do not play with the appliance.**

BEFORE USE

Unpacking & Installing

By following the basic steps on these two pages you will be able to quickly check that your oven is operating correctly. Please pay particular attention to the guidelines on where to install your oven. When unpacking your oven make sure you remove all accessories and packing materials. Check to make sure that your oven has not been damaged during shipping.

1 Unpack your oven and place it on a flat level surface.

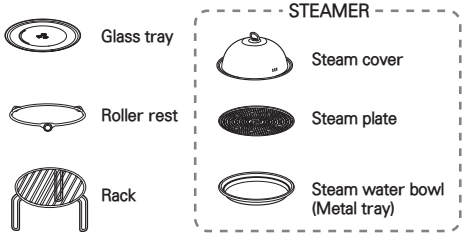

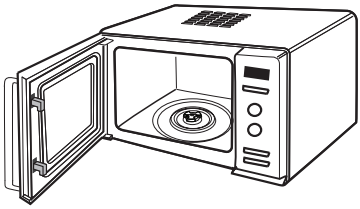

2 Place the oven on the level location of your choice with more than 85 cm height but make sure there is at least 20 cm of space on the top and 10 cm at the rear for proper ventilation. The front of the oven should be at least 8 cm from the edge of the surface to prevent tipping.
An exhaust outlet is located on bottom or side of the oven. Blocking the outlet can damage the oven.

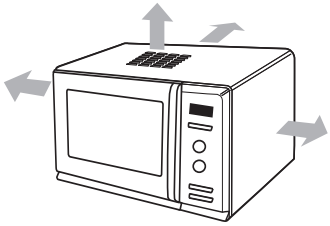

CAUTION

- THIS OVEN SHOULD NOT BE USED FOR COMMERCIAL CATERING PURPOSES.

3 Plug your oven into a standard household socket. Make sure your oven is the only appliance connected to the socket. **If your oven does not operate properly, unplug it from the electrical socket and then plug it back in.**

4 Open your oven door by pulling the door handle. Place the rotating ring inside the oven and place the glass tray on top.

5 Fill a **microwave safe container** with 300 ml (1/2 pint) of water. Place on the glass tray and close the oven door.
If you have any doubts about what type of container to use please refer to Page 10.

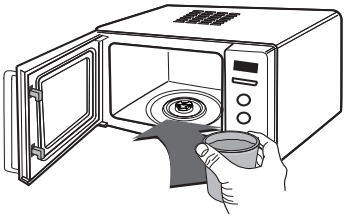

6 Press the **STOP/CLEAR** button, and press the **START/QUICK START** button one time to set 30 seconds of cooking time.

7 The **DISPLAY** will count down from 30 seconds.
When it reaches 0 it will sound BEEPS. Open the oven door and test the temperature of the water.
If your oven is operating the water should be warm.
Be careful when removing the container it may be hot.

YOUR OVEN IS NOW INSTALLED

8 The contents of feeding bottles and baby food jars shall be stirred or shaken and the temperature checked before consumption in order to avoid burns.

Method To Use Accessories As Per Mode

	Microwave	Grill	Combination
STEAMER(ASSEMBLY)	O	—	—
STEAM WATER BOWL(METAL TRAY)	O	O	O
RACK	—	O	O
GLASS RACK	O	O	O

Caution: Use accessories in accordance with cooking guides!

O Acceptable
— Not Acceptable

Microwave-Safe Utensils

Never use metal or metal trimmed utensils in using microwave function

Microwaves cannot penetrate metal. They will bounce off any metal object in the oven and cause arcing, an alarming phenomenon that resembles lightning. Most heat resistant non metallic cooking utensils are safe for use in your oven. However, some may contain materials that render them unsuitable as microwave cookware. If you have any doubts about a particular utensil, there's a simple way to find out if it can be used in the microwave.
Place the utensil in question next to a glass bowl filled with water in using microwave function. Microwave at power HIGH for 1 minute. If the water heats up but the utensil remains cool to the touch, the utensil is microwave-safe. However, if the water does not change temperature but the utensil becomes warm, microwaves are being absorbed by the utensil and it is not safe for use in using microwave function. You probably have many items on hand in your kitchen right now that can be used as cooking equipment in the microwave. Just read through the following checklist.

Dinner plates

Many kinds of dinnerware are microwave-safe. If in doubt consult the manufacturer's literature or perform the microwave test.

Glassware

Glassware that is heat-resistant is microwave-safe. This would include all brands of oven tempered glass cookware. However, do not use delicate glassware, such as tumblers or wine glasses, as these might shatter as the food warms.

Plastic storage containers

These can be used to hold foods that are to be quickly reheated. However, they should not be used to hold foods that will need considerable time in the oven as hot foods will eventually warp or melt plastic containers.

Paper

Paper plates and containers are convenient and safe to use in using microwave function, provided that the cooking time is short and foods to be cooked are low in fat and moisture. Paper towels are also very useful for wrapping foods and for lining baking trays in which greasy foods such as bacon are cooked. In general, avoid coloured paper products as the colour may run. Some recycled paper products may contain impurities which could cause arcing or fires when used in the microwave.

Plastic cooking bags

Provided they are made specially for cooking, cooking bags are microwave safe. However, be sure to make a slit in the bag so that steam can escape. Never use ordinary plastic bags for cooking in using microwave function, as they will melt and rupture.

Plastic microwave cookware

A variety of shapes and sizes of microwave cookware are available. For the most part, you can probably use items you already have on hand rather than investing in new kitchen equipment.

Pottery, stoneware and ceramic

Containers made of these materials are usually fine for use in using microwave function, but they should be tested to be sure.

CAUTION

- Some items with high lead or iron content are not suitable as cooking utensils.
- Utensils should be checked to ensure that they are suitable for use in the microwave.

Control Panel

Solo models

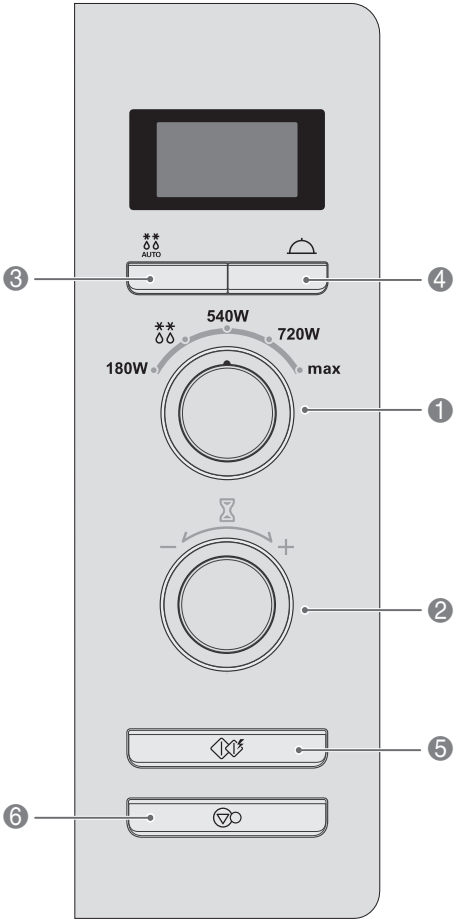

Part
❶ **POWER SELECTOR** Allows selection of desired power.
❷ **TIMER** Permits selection of the desired cooking time.
❸ **AUTO DEFROST** See page 16 "Auto defrost"
❹ **STEAM CHEF** See page 18 "Steam chef"
❺ **START/QUICK START** • In order to start cooking which is selected, press button one time. • The quick start feature allows you to set 30 seconds intervals of HIGH power cooking with a touch of the quick start button.
❻ **STOP/CLEAR** • Stop over and clear all entries except time of day.

Control Panel

Grill models

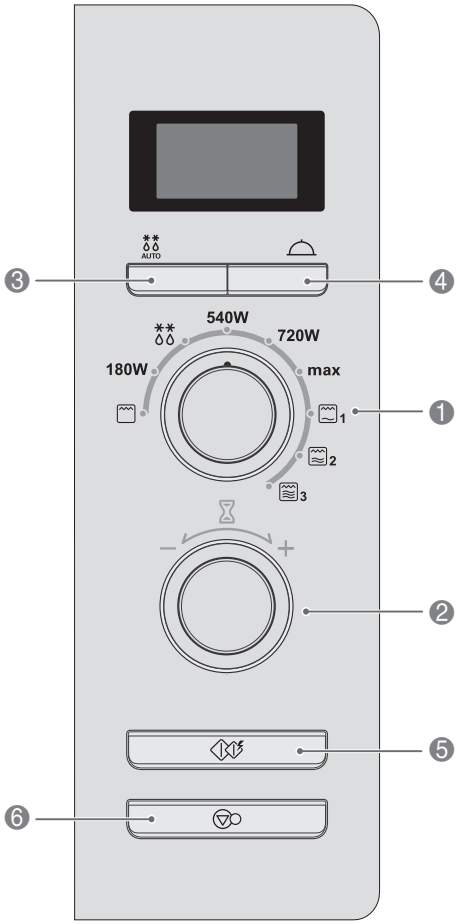

Part
❶ **POWER SELECTOR** Allows selection of desired power.
❷ **TIMER** Permits selection of the desired cooking time.
❸ **AUTO DEFROST** See page 16 "Auto defrost"
❹ **STEAM CHEF** See page 18 "Steam chef"
❺ **START/QUICK START** • In order to start cooking which is selected, press button one time. • The quick start feature allows you to set 30 seconds intervals of HIGH power cooking with a touch of the quick start button.
❻ **STOP/CLEAR** • Stop over and clear all entries except time of day.

Setting The Clock

You can set either 12 hour clock or 24 hour clock. In the following example, show you how to set the time for 14:35 when using the 24 clock.

Everytime when your oven is plugged in, "24H" appears on the display. When power resumes after a power cut, a '0' will be shown in the display; you will have to reset the clock. If the clock (or display) shows any strange looking symbols, unplug your oven from the eletrical socket and plug it back in and reset the clock.

1 Turn **TIMER.**

(If you want to select 12H , Please turn **TIMER.**)

Press **START/QUICK START.**

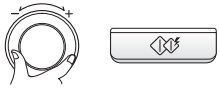

2 Turn **TIMER** until display shows "14:00".

Press **START/QUICK START.**

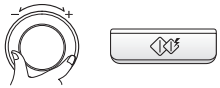

3 Turn **TIMER** until display shows "14:35".

Press **START/QUICK START.**

The clock starts counting.

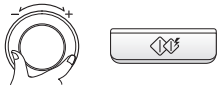

NOTE

- When your oven is plugged in for the first time you will have to reset the clock.
- If the clock (or display) shows any strange looking symbols, unplug your oven from the electrical socket and plug it back in and reset the clock.

Child Lock

In the following example, show you how to set the child lock.

1 Press **STOP/CLEAR.**

2 Press and hold **STOP/CLEAR** until **"L"** appears on the display and BEEP sounds.

The **CHILD LOCK** is now set.

If any button is pressed, **"L"** will appear on the display.

3 To cancel **CHILD LOCK** press and hold **STOP/CLEAR** until **"L"** disappears.

You will hear BEEP when it's unlocked.

NOTE

Your oven has a safety feature that prevents accidental running of the oven. Once the child lock is set, you will be unable to use any functions and no cooking can take place.

Quick Start

In the following example, show you how to set 2 minutes of cooking on high power (900 W).

1 Press **STOP/CLEAR.**

2 Press **START/QUICK START** four times to select 2 minutes on high power (900 W).

Your oven will start before you have finished the fourth press.

3 Press **START/QUICK START** cooking, you can extend the cooking time up to 99 minutes 59 seconds by turning the **TIMER** dial.

NOTE

The **START/QUICK START** feature allows you to set 30 seconds intervals of HIGH power (900 W) cooking by pressing the **START/QUICK START** button.

HOW TO USE

Microwave Power Cooking

Open the oven door, place the food on the turntable in the oven, and close the oven door.

1 Press **STOP/CLEAR.**

2 Set the power selector **POWER SELCTOR** to the desired power level. There are five power levels. The power selector can be set to any one of these positions.

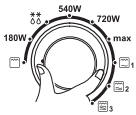

3 Set the timer selector **TIMER** to the desired cooking time.
Press **START/QUICK START.** The turntable begins to rotate and cooking starts.
At the end of cooking time four short beep sounds, and the lamp is turned off and End will be shown in the display.

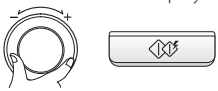

NOTE

- Your oven has 5 microwave power settings. High power is automatically selected and turning of **COOK MODE** will select a different power level.
- Food to be cooked should be placed in a microwave-safe utensils.
- Please do not use the following accessories.

Microwave Power Level

This oven is equipped with 5 power levels to give you maximum flexibility and control over cooking. The table below shows some examples of food and their recommended cooking power levels for use with this oven.

POWER LEVEL	OUTPUT	USE	ACCESSORY
HIGH	900 W	• Boil water • Brown minced beef • Cook poultry pieces, fish, vegetables • Cook tender cuts meat	Microwave-safe plate
MED-HIGH	720 W	• All reheating • Roast meat and poultry • Cook mushrooms and shellfish • Cook foods containing cheese and eggs	
MED	540 W	• Bake cakes and scones • Prepare eggs • Cook custard • Prepare rice, soup	
MED-LOW	360 W	• Weight defrost cooking • All thawing • Melt butter and chocolate • Cook less tender cuts of meat	
LOW	180 W	• Soften butter & cheese • Soften ice cream • Raise yeast-based dough	

Weight defrost Cooking

Defrosting frozen food is one of the benefits of a microwave oven. Defrosting using a microwave oven is much faster than in the refrigerator and safer than at room temperature, as it does not promote the growth of harmful bacteria.

It is important to remember that defrosting takes longer than normal cooking. Check the food, turning it over at least once during defrosting.

1 Press **STOP/CLEAR.**

2 Turn the power selector **POWER SELECTOR** to set the defrosting mode (Defrost).

3 Turn the timer selector **TIMER** clockwise to set the time.

3 Press **START/QUICK START.**

CAUTION

Be careful when removing your food the container will be hot!

Auto defrost

The temperature and density of food varies, I would recommend that the food is checked before cooking commences. Pay particular attention to large joints of meat and chicken, some foods should not be completely thawed before cooking. The BREAD programme is suitable for defrosting small items such as rolls or a small loaf. These will require a standing time to allow the centre to Thaw. In the following example I will show you how to defrost 1.4 Kg of frozen poultry.

1 Press **STOP/CLEAR.**
Weight the food that you are about to defrost. Be certain to remove any metallic ties or wraps; then place the food in your oven and close the oven door.

2 Press **AUTO DEFROST** twice to select **POULTRY** defrosting programme.
The display shows "DEF2".

3 Enter the weight of the frozen food that you are about to defrost.
Turn **TIMER** until display shows "1.4 Kg".

4 Press **START/QUICK START.**

5 During defrosting your oven will "BEEP", at which point open the oven door, turn food over and separate to ensure even thawing, Remove any portions that have thawed or shield them to help slow down thawing. After checking close the oven door and press **START** to resume defrosting.

Your oven will not stop defrosting (even when the beep sounded) unless the door is opened.

NOTE

- Your oven has four microwave defrost settings: **-MEAT, POULTRY, FISH** and **BREAD;** each defrost category has different power settings.
- Repeated presses of the **AUTO DEFROST** button will select a different setting.

Defrosting Guide

* Food to be defrosted should be in a suitable microwave proof container and place uncovered on the glass turntable.
* If decessary, shield small areas of meat or poultry with flat pieces of a aluminum foil. This will prevent thin areas becoming warm during defrosting. Ensure the foil does not touch the oven walls
* Separate items like minced meat, chops, sausages and bacon as soon as possible. When BEEP, at this piont remove the food from the microwave oven, turn the food over and return to the microwave oven. Press Start to continue.
  At the end of the program, remove the food from the microwave oven, cover with foil and allow to stand until completely thawed.
* To thaw completely, for example joints of meat and whole chickens should STAND for a minimum of 1 hour before cooking.

Category	Instructions
DEF1: Meat - Weight Limit : 0.1~4.0 kg - Utensil : Microwave(Flat plate)	- Minced beef, Fillet steak, Cubes for stew, Sirloin steak, Pot roast, Rump roast, Beef burger Pork chops, Lamp chops, Rolled roast, Sausage, Cutlets (2 cm). - Turn food over at BEEP. - After defrosting, let stand for 5~15 minutes.
DEF2: Poultry - Weight Limit : 0.1~4.0 kg - Utensil : Microwave(Flat plate)	- Whole chicken, Legs, Breasts, Turkey breasts (under 2.0 kg). - Turn food over at BEEP. - After defrosting, let stand for 20~30 minutes.
DEF3: Fish - Weight Limit : 0.1~4.0 kg - Utensil : Microwave(Flat plate)	- Fillets, Steaks, Whole fish, Sea food. - Turn food over at BEEP. - After defrosting, let stand for 10~20 minutes.
DEF4: Bread - Weight Limit : 0.1~0.5 kg - Utensil : Paper towel or flat plate	- Sliced bread, Buns, Baguette, etc. - Separate slices and place between paper towel or flat plate. - Turn food over at beep. - After defrosting, let stand for 1~2 minutes.

Steam Chef

In the following example I willl show you how to cook 0.6 kg of fresh vegetable (large cut).

1 Press **STOP/CLEAR.**

2 Press **STEAM CHEF** twice to select Fresh vegetable (large cut).

3 Turn **TIMER** until display shows "0.6 Kg".

5 Press **START/QUICK START.**

CAUTION

1. Always use oven gloves when removing a STEAMER from the oven. It's very hot.
2. Do not put a hot STEAMER on a glass table or a place easy to be melted afer cooking. Always make sure to use a pad or tray.
3. Be sure to put water before use when you cook it using STEAMER.
4. Be careful when you move the STEAMER with water.
5. When you use the STEAMER, the steam cover and steam water bowl should be set perfectly right. The eggs or the chestnut would be exploding without setting the steam cover and steam water bowl.
6. This feature allows you steamed cook. The five Steam Chef features provide pre-programmed cooking time. You do not need to set either the cooking time or power level. You can adjust the number of servings by pressing the select buttons. First, place the food in the center of the **Steam plate** above in the **Steam water bowl** and close the **Steam cover.**

Steam cover

Steam plate

Steam water bowl
(Metal tray)

Steam Chef Guide

Category	Instructions
Sc-1: VEGETABLE (SMALL CUT) - Weight Limit : 0.2~0.8 kg - Food Temp. : Room - Water : 300 ML - Utensil : Steam cover / Steam plate / Steam water bowl	Clean the vegetables and cut into similar sized pieces. Pour 300ml tap water into the steam water bowl. Place the steam plate on the steam water bowl . Place the prepared vegetables on the steam plate. Cover with the steam cover. Place the steam water bowl on the center of the glass tray. After steaming, stand for 3~5 minutes in the oven. - Sliced carrots , sliced potatoes, pepper, courgettes, cauliflower. - florets and broccoli florets. Tomatoes (small size).
Sc-2: VEGETABLE (LARGE CUT) - Weight Limit : 0.2~0.8 kg - Food Temp. : Room - Water : 300 ML - Utensil : Steam cover / Steam plate / Steam water bowl	Clean the vegetables and cut into similar sized pieces. Pour 300ml tap water into the steam water bowl. Place the steam plate on the steam water bowl. Place the prepared vegetables on the steam plate. Cover with the steam cover. Place the steam water bowl on the center of the glass tray. After steaming, stand for 3~5 minutes in the oven. - Potato cut int o half, Cabbage cut into quarters. Whole cauliflower, Corn on the cob.
Sc-3: SEAFOODS - Weight Limit : 0.1~0.6 kg - Food Temp. : Room - Water : 300 ML - Utensil : Steam cover / Steam plate / Steam water bowl	Clean the food. Pour 300ml tap water into the steam water bowl. Place the steam plate on the steam water bowl . Place the prepared food on the steam plate. Cover with the steam cover. Place the steam water bowl on the center of the glass tray. After steaming, stand for 3~5 minutes in the oven. - Fish fillets, fish steak, whole fish, shrimp, crab, clam.
Sc-4: CHECKEN BREASTS - Weight Limit : 0.2~0.8 kg - Food Temp. : Refrigerated - Water : 300 ML - Utensil : Steam cover / Steam plate / Steam water bowl	Clean the food. Pour 300ml tap water into the steam water bowl. Place the steam plate on the steam water bowl . Place the prepared chicken on the steam plate. Cover with the steam cover. Place the steam water bowl on the center of the glass tray. After steaming, stand for 3~5 minutes in the oven. - Chicken brea sts, Turkey breasts.
Sc-5: EGGS - Weight Limit : 2~9 eggs - Food Temp. : Refrigerated - Water : 300 ML - Utensil : Steam cover / Steam plate / Steam water bowl	Pour 300ml tap water into the steam water bowl. Place the steam plate on the steam water bowl . Place the prepared egg on the steam plate. Cover with the steam cover. Place the steam water bowl on the center of the glass tray. After steaming, stand for 3~5 minutes in the oven.

Grill Cooking(For Grill models)

Open the oven door, place the food on the rack in the oven, and close the oven door.

1 Press **STOP/CLEAR.**

2 Turn the function & power selector **POWER SELECTOR** to grill mode .

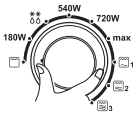

3 Set the timer selector **TIMER** to the desired cooking time.

4 Press start **START/QUICK START**.
The turntable begins to rotate and cooking starts. At the end of cooking time four short beep sounds, and the lamp is turned off and "End "will be shown in the display.

CAUTION

Use of the grill rack is preferable, as time and performance of cooking will vary when turntable is used alone.

NOTE

- Refer to the note under MICROWAVE COOKING if you want to check the cooking condition.
- Don t touch the viewing window during grill operation, because the temperature of the glass may rise up to 100 C.
- Prevent children from touching the front screen!
- When the grill is operated for the first time after purchasing the oven, some smoke may be observed. This will soon disappear.

Grill Combi Cooking (For Grill models)

Open the oven door, place the food on the rack in the oven, and close the oven door.

1 Press **STOP/CLEAR.**

2 Turn the function & power selector **POWER SELECTOR** to COMBI mode / / .

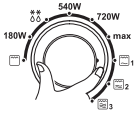

3 Set the timer selector **TIMER** to the desired cooking time.

4 Press start **START/QUICK START**.
The turntable begins to rotate and cooking starts. At the end of cooking time four short beep sounds, and the lamp is turned off and End will be shown in the display.

NOTE

The above models have a combination cooking mode which allows you to cook food with **Grill** and **Microwave** at the same time. The time it takes to cook food using this mode is generally shorter than using the two features separately. The grills the surface of the food while microwave cooking reaches inside.

CAUTION

Be careful when removing your food the container will be hot!

FOOD CHARACTERISTICS & MICROWAVE COOKING

Keeping an eye on things

The recipes in the book have been formulated with great care, but your success in preparing them depends on how much attention you pay to the food as it cooks. Always watch your food while it cooks. Your microwave function is equipped with a light that turns on automatically when the oven is in operation so that you can see inside and check the progress of your food. Directions given in recipes to elevate, stir, and the like should be thought of as the minimum steps recommended. If the food seems to be cooking unevenly, simply make the necessary adjustments you think appropriate to correct the problem.

Factors affecting microwave cooking times

Many factors affect cooking times. The temperature of ingredients used in a recipe makes a big difference in cooking times. For example, a cake made with ice-cold butter, milk, and eggs will take considerably longer to bake than one made with ingredients that are at room temperature. All of the recipes in this book give a range of cooking times. In general, you will find that the food remains under-cooked at the lower end of the time range, and you may sometimes want to cook your food beyond the maximum time given, according to personal preference. The governing philosophy of this book is that it is best for a recipe to be conservative in giving cooking times because overcooked food is ruined for good. Some of the recipes, particularly those for bread, cake, and custards, recommend that food be removed from the oven when they are slightly undercooked.
This is not a mistake. When allowed to stand, usually covered, these foods will continue to cook outside of the oven as the heat trapped within the outer portions of the food gradually travels inward. If the food is left in the oven until it is cooked all the way through, the outer portions will become overcooked or even burnt. You will become increasingly skillful in estimating both cooking and standing times for various foods.

Density of food

Light, porous food such as cakes and breads cook more quickly than heavy, dense foods such as roasts and casseroles. You must take care when microwaving porous food so that the outer edges do not become dry and brittle.

Height of food

The upper portion of tall foods, particularly roasts, will cook more quickly than the lower portion. Therefore, it is wise to turn tall food several during cooking.

Moisture content of food

Since the heat generated from microwaves causes moisture to evaporate, relatively dry food such as roasts and some vegetables should either be sprinkled with water prior to cooking or covered to retain moisture.

Bone and fat content of food

Bones conduct heat and fat cooks more quickly than meat. Care must be taken when cooking bony or fatty cuts of meat in order to prevent unevenly or overcooked meat.

Quantity of food

The number of microwaves in your oven remains constant regardless of how much food is being cooked. Therefore, the more food you place in the oven, the longer the cooking time. Remember to decrease cooking times by at least one third when halving a recipe.

FOOD CHARACTERISTICS & MICROWAVE COOKING

Shape of food

Microwaves penetrate only about 2 cm into food, the interior portion of thick foods are cooked as the heat generated on the outside travels inward. Only the outer edge of food is cooked by microwave energy; the rest is cooked by conduction. The worst possible shape for a food that is to be microwaved is a thick square. The corners will burn long before the centre is even warm. Round thin foods and ring shaped foods cook most successfully in the microwave.

Covering

A cover traps heat and steam which causes food to cook more quickly. Use a lid or microwave cling film with a corner folded back to prevent splitting.

Browning

Meats and poultry that are cooked fifteen minutes or longer will brown lightly in their own fat. Foods that are cooked for a shorter period of time may be brushed with a browning sauce such as worcestershire sauce, soy sauce or barbecue sauce to achieve an appetizing colour. Since relatively small amounts of browning sauces are added to food, the original flavour of the recipe is not altered.

Covering with greaseproof paper

It is a looser cover than a lid or cling film, the food may dry out slightly. But because it makes a looser cover than a lid or clingfilm, it allows the food to dry out slightly.

Arranging and spacing

Individual foods such as baked potatoes, small cakes and hors d'oeuvres will heat more evenly if placed in the oven an equal distance apart, preferably in a circular pattern. Never stack foods on top of one another.

Stirring

Stirring is one of the most important of all microwaving techniques. In conventional cooking, food is stirred for the purpose of blending. Microwaved food, however, is stirred in order to spread and redistribute heat. Always stir from the outside towards the centre as the outside of the food heats first.

Turning over

Large, tall foods such as roasts and whole chickens should be turned so that the top and bottom will cook evenly. It is also a good idea to turn cut up chicken and chops.

Placing thicker portions facing outwards

Since microwaves are attracted to the outside portion of food, it makes sense to place thicker portions of meat, poultry and fish to the outer edge of the baking dish. This way, thicker portions will receive the most microwave energy and the food will cook evenly.

Shielding

Strips of aluminium foil (which block microwaves) can be placed over the corners or edges of square and rectangular foods to prevent those portions from overcooking. Never use too much foil and make sure the foil is secured to the dish or it may cause'arcing' in the oven.

Elevating

Thick or dense foods can be elevated so that microwaves can be absorbed by the underside and centre of the foods.

FOOD CHARACTERISTICS & MICROWAVE COOKING

Piercing

Foods enclosed in a shell, skin or membrane are likely to burst in the oven unless they are pierced prior to cooking. Such foods include yolks and whites of eggs, clams and oysters and whole vegetables and fruits.

Testing if cooked

Food cooks so quickly in a oven, it is necessary to test it frequently. Some foods are left in the microwave until completely cooked, but most foods, including meats and poultry, are removed from the oven while still slightly undercooked and allowed to finish cooking during standing time. The internal temperature of foods will rise between 5° F (3° C) and 15° F (8° C) during standing time.

Standing time

Foods are often allowed to stand for 3 to 10 minutes after being removed from the oven. Usually the foods are covered during standing time to retain heat unless they are supposed to be dry in texture (some cakes and biscuits, for example). Standing allows foods to finish cooking and also helps flavour blend and develop.

To Clean Your Oven

1 Keep the inside of the oven clean

Food spatters or spilled liquids stick to oven walls and between the seal and door surfaces. It is best to wipe up spillovers with a damp cloth right away. Crumbs and spillovers will absorb microwave energy and lengthen cooking times. Use a damp cloth to wipe out crumbs that fall b etween the door and the frame. It is important to keep this area clean to assure a tight seal. Remove greasy spatters with a soapy cloth then rinse and dry.
Do not use harsh detergent or abrasive cleaners. The metal tray can be washed by hand or in the dishwasher.

2 Keep the outside of the oven clean

Clean the outside of your oven with soap and water then with clean water and dry with a soft cloth or paper towel. To prevent damage to the operating parts inside the oven, the water should not be allowed to seep into the ventilation openings. To clean control panel, open the door to prevent the oven from accidentally starting, and wipe a damp cloth followed immediately by a dry cloth. Press Stop/Clear after cleaning.

3 If steam accumulates inside or around the outside of the oven door, wipe the panels with a soft cloth. This may occur when the oven is operated under high humidity conditions and in no way indicates a malfunction of the unit.

4 The door and door seals should be kept clean. Use only warm, soapy water, rinse then dry thoroughly. DO NOT USE ABRASIVE MATERIALS, SUCH AS CLEANING POWDERS OR STEEL AND PLASTIC PADS. Metal parts will be easier to maintain if wiped frequently with a damp cloth.

5 Do not use steam cleaners.

6 Unplug your oven from the electrical socket when you clean control panel with wet cloth or spray water on control glass to clean. If it is not unplugged, this product can be operated by touching the Quick Start button.

QUESTIONS & ANSWERS

FAQ	Answer
What's wrong when the oven light will not glow?	There may be several reasons why the oven light will not glow.Either the light bulb has blown or the electric circuit has failed.
Does microwave energy pass through the viewing screen in the door?	No. The holes, or ports, are made to allow light to pass; they do not let microwave energy through.
Why does the BEEP tone sound when a button on the control panel is touched?	The BEEP tone sounds to assure that the setting is being properly entered.
Will the microwave function be damaged if it operates empty?	Yes. Never run it empty.
Why do eggs sometimes pop?	When baking, frying, or poaching eggs, the yolk may pop due to steam build up inside the yolk membrane. To prevent this, simply pierce the yolk before cooking. Never microwave eggs in the shell.
Why is standing time recommended after microwave cooking is over?	After microwave cooking is finished, food keeps on cooking during standing time. This standing time finishes cooking evenly throughout the food. The amount of standing time depends on the density of the food.
Why doesn't my oven always cook as fast as the cooking guide says?	Check your cooking guide again to make sure you've followed directions correctly, and to see what might cause variations in cooking time. Cooking guide times and heat settings are suggestions, chosen to help prevent overcooking, the most common problem in getting used to this oven. Variations in the size, shape, weight and dimensions of the food require longer cooking time. Use your own judgment along with the cooking guide suggestions to test food conditions, just as you would do with a conventional cooker.

TECHNICAL SPECIFICATIONS

	MS2839AC/MS2839ACS/MS2839ACK
Power Input	230 V AC, 50 Hz
Output (IEC 60705 Rating standard)	900Watts
Microwave Freq uenc	2450 MHz
Outside Di mension s (W × H × D mm)	508 x 290 x 400
Power Consumption	1300 Watts

	MH6839AC/MH6839ACS/MH6839ACK
Power Input	230 V AC, 50 Hz
Output (IEC 60705 Rating standard)	900Watts
Microwave Freq uenc	2450 MHz
Outside Di mension s (W × H × D mm)	508 x 290 x 400
Power Consumption	1300 Watts
Power Consumption	
Microwave	1300 Watts
Grill	1000 Watts
Com bination	2250 Watts

Disposal of your old appliance

1. When this crossed-out wheeled bin symbol is attached to a product it means the product is covered by the European Directive 2002/96/EC.
2. All electrical and electronic products should be disposed of separately from the municipal waste stream via designated collection facilities appointed by the government or the local authorities.
3. The correct disposal of yo ur old appliance will help prevent potential negative consequences for the environment and human health.
4. For more detailed information about disposal of your old appliance, please contact your city office, waste disposal service or the shop where you purchased the product.

LG

Life's Good