LG
Life's Good

OWNER'S MANUAL
Micro Hi-Fi System

Please read this manual carefully before operating your set and retain it for future reference.

XA66 (XA66, XAS66F)

P/NO : MFL67161639

XA66-A0U-APANLLK-ENG.indd 1 11. 05. 24 □□ 9:29

Safety Information



CAUTION: TO REDUCE THE RISK OF ELECTRIC SHOCK DO NOT REMOVE COVER (OR BACK) NO USER-SERVICEABLE PARTS INSIDE REFER SERVICING TO QUALIFIED SERVICE PERSONNEL.



This lightning flash with arrowhead symbol within an equilateral triangle is intended to alert the user to the presence of uninsulated dangerous voltage within the product's enclosure that may be of sufficient magnitude to constitute a risk of electric shock to persons.



The exclamation point within an equilateral triangle is intended to alert the user to the presence of important operating and maintenance (servicing) instructions in the literature accompanying the product.

WARNING: TO PREVENT FIRE OR ELECTRIC SHOCK HAZARD, DO NOT EXPOSE THIS PRODUCT TO RAIN OR MOISTURE.

WARNING: Do not install this equipment in a confined space such as a book case or similar unit.

CAUTION: Do not block any ventilation openings. Install in accordance with the manufacturer's instructions.
Slots and openings in the cabinet are provided for ventilation and to ensure reliable operation of the product and to protect it from over heating. The openings shall be never be blocked by placing the product on a bed, sofa, rug or other similar surface. This product shall not be placed in a built-in installation such as a bookcase or rack unless proper ventilation is provided or the manufacturer's instruction has been adhered to.

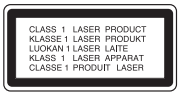

CAUTION: This product employs a Laser System.
To ensure proper use of this product, please read this owner's manual carefully and retain it for future reference. Shall the unit require maintenance, contact an authorized service center.
Use of controls, adjustments or the performance of procedures other than those specified herein may result in hazardous radiation exposure.
To prevent direct exposure to laser beam, do not try to open the enclosure. Visible laser radiation when open. DO NOT STARE INTO BEAM.

CAUTION concerning the Power Cord

Most appliances recommend they be placed upon a dedicated circuit;

That is, a single outlet circuit which powers only that appliance and has no additional outlets or branch circuits. Check the specification page of this owner's manual to be certain. Do not overload wall outlets. Overloaded wall outlets, loose or damaged wall outlets, extension cords, frayed power cords, or damaged or cracked wire insulation are dangerous. Any of these conditions could result in electric shock or fire. Periodically examine the cord of your appliance, and if its appearance indicates damage or deterioration, unplug it, discontinue use of the appliance, and have the cord replaced with an exact replacement part by an authorized service center. Protect the power cord from physical or mechanical abuse, such as being twisted, kinked, pinched, closed in a door, or walked upon. Pay particular attention to plugs, wall outlets, and the point where the cord exits the appliance. To disconnect power from the mains, pull out the mains cord plug. When installing the product, ensure that the plug is easily accessible.

This device is equipped with a portable battery or accumulator.

Safety way to remove the battery or the battery from the equipment: Remove the old battery or battery pack, follow the steps in reverse order than the assembly. To prevent contamination of the environment and bring on possible threat to human and animal health, the old battery or the battery put it in the appropriate container at designated collection points. Do not dispose of batteries or battery together with other waste. It is recommended that you use local, free reimbursement systems batteries and accumulators. The battery shall not be exposed to excessive heat such as sunshine, fire or the like.

CAUTION: The apparatus shall not be exposed to water (dripping or splashing) and no objects filled with liquids, such as vases, shall be placed on the apparatus.

Table of Contents

1 Getting Started

2 Safety Information
5 Unique Features
5 Accessories
5 Playable file Requirement
5 – MP3/WMA music file requirement
5 – Compatible USB Devices
5 – USB device requirement
6 Remote control
7 Front panel
8 Rear panel

2 Connecting

9 Connecting to speakers
9 – Attaching the speakers to the unit
9 Optional Equipment Connection
9 – USB Connection
9 – PORT. IN Connection
10 – Antenna Connection

3 Operating

11 Basic Operations
11 – CD/ USB Operations
11 – Selecting a folder
11 Other Operations
11 – Programmed Playback
11 – Displaying file information (ID3 TAG)
12 Radio Operations
12 – Listening to the radio
12 – Presetting the Radio Stations
12 – Deleting all the saved stations
12 – Improving poor FM reception
13 Sound adjustment
13 – Setting the surround mode
13 Setting the Clock
13 – Using your player as an alarm clock
14 – Sleep Timer Setting
14 – Dimmer
14 Advanced Operations
14 – Listening to music from your external device
14 – Recording to USB
15 – To select recording bit rate and speed

4 Troubleshooting

16 Troubleshooting

5 Appendix

17 Specifications
18 Maintenance
18 – Handling the Unit
18 – Notes on Discs
18 Trademarks and Licenses

Unique Features

USB Direct Recording

Records music to your USB device.

Portable In

Listens to music from your portable device. (MP3, Notebook, etc)

Accessories

Please check and identify the supplied accessories.

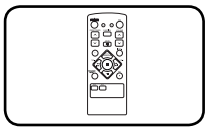

Remote Control (1)

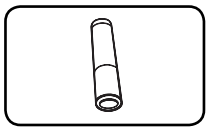

Battery (1)

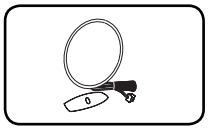

AM antenna(1)
(optional)

Playable file Requirement

MP3/WMA music file requirement

MP3/ WMA file compatibility with this unit is limited as follows :

- Sampling Frequency : 32 - 48 kHz (MP3), 32 - 48 kHz (WMA)
- Bit rate : 32 - 320 kbps (MP3), 40 - 320 kbps (WMA)
- Maximum files : Under 999
- File extensions : ".mp3"/ ".wma"
- CD-ROM file format : ISO9660/ JOLIET
- We recommend that you use "Easy-CD Creator", which creates an ISO 9660 file system.

Compatible USB Devices

- MP3 Player : Flash type MP3 player.
- USB Flash Drive : Devices that support USB2.0 or USB1.1.
- The USB function of this unit does not support all USB devices.

USB device requirement

- Devices which require additional program installation when you have connected it to a computer, are not supported.
- Do not extract the USB device while in operation.
- For a large capacity USB, it may take longer than a few minute to be searched.
- To prevent data loss, back up all data.
- If you use a USB extension cable or USB hub, the USB device is not recognized.
- Using NTFS file system is not supported. (Only FAT(16/ 32) file system is supported.)
- This unit is not supported when the total number of files is 1 000 or more.
- External HDD, Card readers, Locked devices, or hard type USB devices are not supported.
- USB port of the unit cannot be connected to PC. The unit cannot be used as a storage device.

Remote control

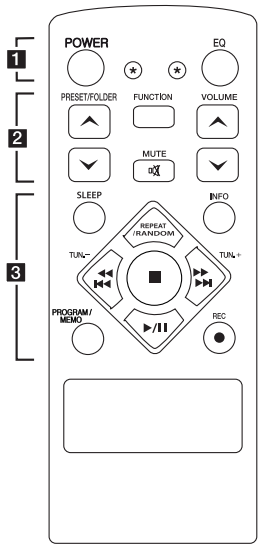

Battery Installation

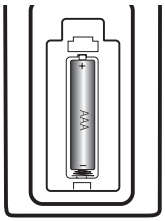

Remove the battery cover on the rear of the Remote Control, and insert one (size AAA) battery with ⊕ and ⊖ matched correctly.

• • • • • • **1** • • • • •

POWER : Switches the unit ON or OFF.

★ : The button is not available for any function.

EQ : Chooses sound impressions.

• • • • • • **2** • • • • •

PRESET/FOLDER Λ/V : Searches for a folder of MP3/ WMA files. When a CD/ USB containing MP3/ WMA files in several folders is being played, press **PRESET/FOLDER Λ/V** selects to the folder you want to play. Choose a 'preset number' for a radio station.

FUNCTION : Selects the function and input source.

VOLUME Λ/V : Adjusts speaker volume.

MUTE : Mutes the sound.

• • • • • • **3** • • • • •

SLEEP : Sets the system to turn off automatically at a specified time.
(Dimmer : The display window will be darkening by half.)

INFO : Checks information about your music. MP3 files often come with tags. The tag gives the Title, Artist, Album or Time information.

REPEAT/RANDOM : Listens to your tracks repeatedly or randomly. (only in CD/USB)

TUN. -/+ : Selects the radio station.

⏮◀◀/▶▶⏭ (Skip**/** Search**):**
- Skips Fast backward or Forward.
- Searches for a section within a track.

■ : Stops playback or recording.

▶/II (Play/Pause) **:** Starts or pauses playback.

PROGRAM/MEMO :
- For storing radio stations if you have saved radio stations using **PROGRAM/MEMO**, you can scroll through them and select one.
- Listens to your tracks in any order.

● **REC :** USB direct recording.

Front panel

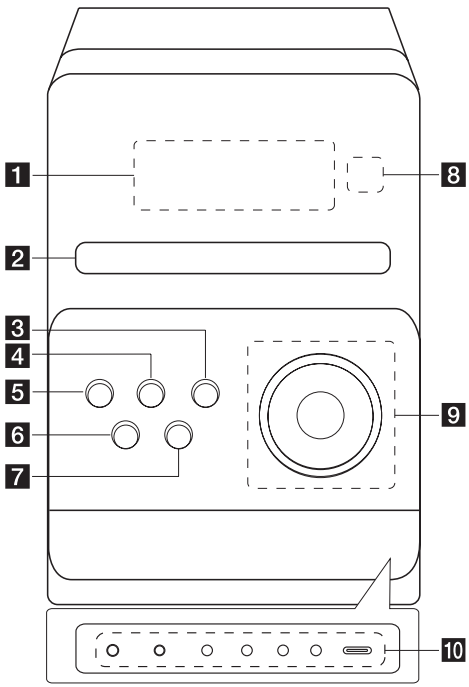

1 Display window

2 Disc tray

3 EQ
Chooses sound impressions.

4 FUNC.
Selects the function or input source.

5 ⏻/❙(Power ON/OFF)

6 ⏏ (OPEN/CLOSE)

7 ■ STOP
Stops playback or recording

8 Remote sensor

9 ►❚❚
Starts playback and pauses.

VOL. +/-
Controls the volume when using any function.

TUN. -/+
Selects the radio station

I◄◄/ ►►I(Skip/Search)
Search backward or Forward
Skips to the previous/ next track

10 PORT.IN

The player can be used to play the music from many types of portable player.

PHONES

Headphone jack.(3.5 mm) A warning that excessive sound pressure from earphones and headphones can cause hearing loss.

CLOCK

For setting the clock and checking the time.

TIMER

With the TIMER function you can turn CD, USB and TUNER on or off at a desired time.

SET

Confirms the setting.

REC.

Recording (Recording to USB) USB Connector.

USB port

You can play or recording sound files by connecting the USB device.

Rear panel

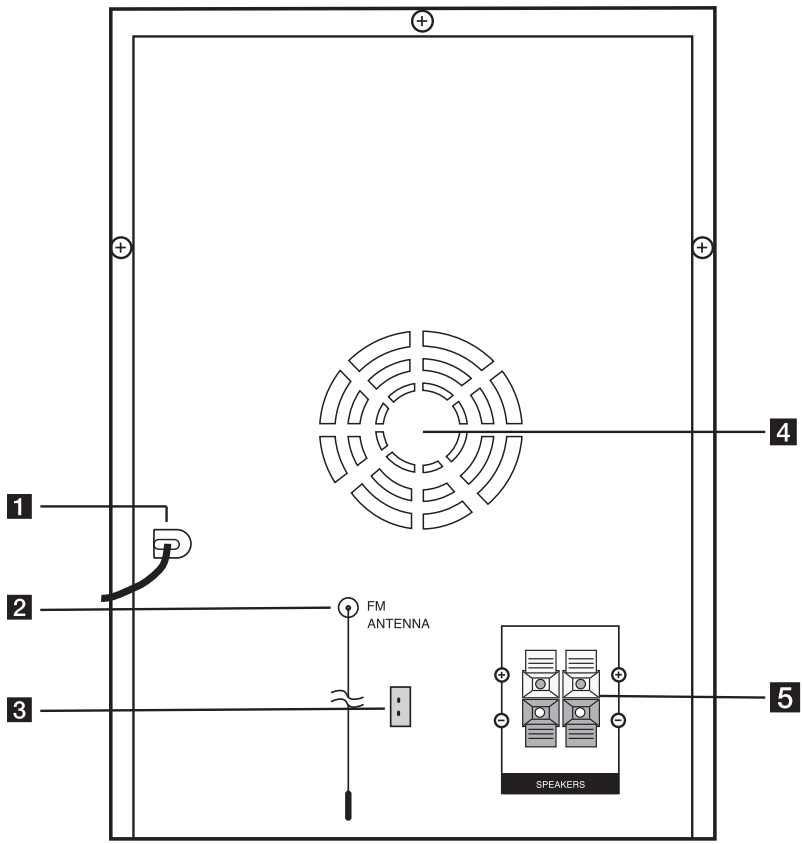

1 Power cord
2 ANTENNA (FM)
3 AM antenna (Optional)
4 Cooling fan
5 Speaker terminal

Connecting to speakers

Attaching the speakers to the unit

To connect the cable to the unit, press each plastic finger pad to open the connection terminals on the unit. Insert the wire and release the finger pad.

Connect the black stripe of each wire to the terminals marked - (minus) and the other end to the terminals marked + (plus).

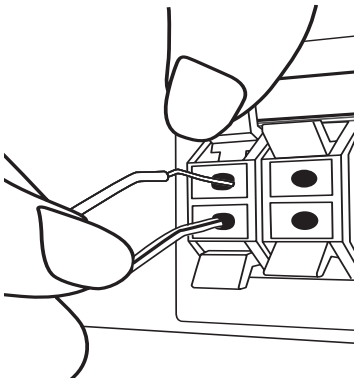

Caution

The speakers contain magnet parts, so color irregularity may occur on the TV screen or PC monitor screen. Please use the speakers far away from either TV screen or PC monitor.

Color	Speaker	Position
Red	Front	Front right
White	Front	Front left

Optional Equipment Connection

USB Connection

Connect the USB Memory (or MP3 player, etc.) to the USB port on the front of the unit.

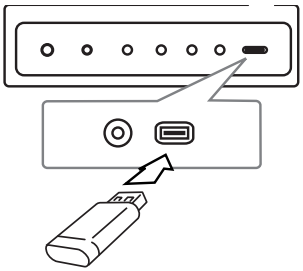

Note

Removing the USB Device from the unit

1. Choose a different function/mode or press ■ twice in a row.
2. Remove the USB device from the unit.

PORT. IN Connection

Connect an output (earphone or line out) of portable device (MP3 or PMP etc) to the PORT. IN connector.

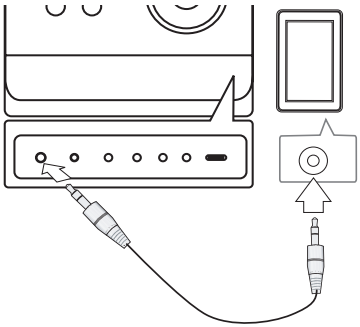

Antenna Connection

Connect the supplied FM/AM (Optional) antenna for listening to the radio.

Connect the AM Loop antenna to the AM antenna connector.

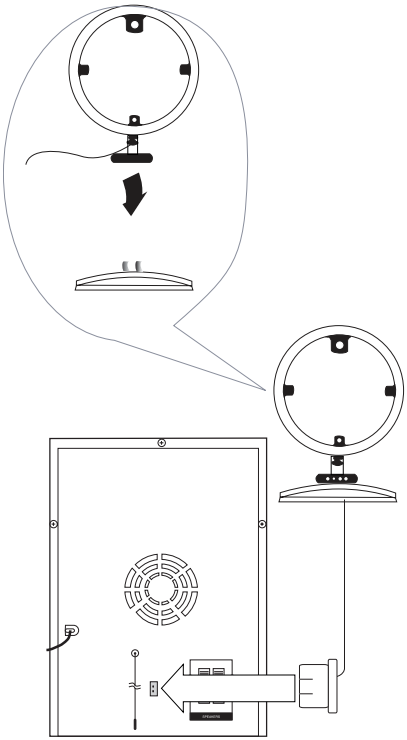

Note

- To prevent noise pickup, keep the AM Loop antenna away from the unit and other components.
- Be sure to fully extend the FM wire antenna. After connecting the FM wire antenna, keep it as horizontal as possible.

Basic Operations

CD/ USB Operations

1. Insert the disc by pressing ⏏ **(Open/Close)** or connect the USB device to the USB port.
2. Select the **CD** or **USB** function by pressing **FUNCTION** on the remote control or **FUNC.** on the unit.
3. Select a file (or track) you want to play by pressing ⏮◀◀/▶▶⏭.

To	Do this
Stop	Press ■
Playback	Press ▶/⏸
Pause	During playback, press ▶/⏸
Skipping to the next/ previous track/ file	During playback, press ⏮◀◀/ ▶▶⏭ to go to the next track/ file or to return to the beginning of the current track/ file. Press ⏮◀◀ twice briefly to step back to the previous track/ file.
Searching for a section within a track	Press and hold ⏮◀◀/▶▶⏭ during playback and release it at the point you want to listen to.
Playing repeatedly or randomly	Press **REPEAT/RANDOM** on the remote control repeatedly, the display change in the following order, RPT1 -> RPT DIR (only MP3/ WMA) -> RPT ALL -> RANDOM -> OFF

Selecting a folder

1. Press **PRESET/FOLDER** ∧/∨ on the remote control repeatedly until a desired folder appears.
2. Press ▶/⏸ to play it. The first file of folder will play.

Other Operations

Programmed Playback

The program function enables you to store your favorite files from any disc or USB device.

A program can contain 20 tracks.

1. Insert a CD or USB and wait for it to be order.
2. Press **PROGRAM/MEMO** on the remote control in stop status.
3. Press ⏮/⏭ on the unit or ⏮◀◀/▶▶⏭ on the remote control in stop status.
4. Press **PROGRAM/MEMO** again to save and select a next track.
5. Press ▶/⏸ to play the programmed music files.
6. To clear your selection, press ■ twice.

Note

The programs are also cleared when the disc or USB device is removed, the unit is powered off or the function is switched to others.

Displaying file information (ID3 TAG)

While playing an MP3 file containing file information, you can display the information by pressing **INFO.**

Turn off the sound temporarily

Press **MUTE** to mute your unit.
You can mute your unit, for example, to answer the telephone, the "🔇" is displayed in the display window.

Radio Operations

Listening to the radio

1. Press **FUNCTION** until FM/AM appears in the display window.
   The last received station is tuned in.
2. Press and hold **TUN. -/+** for about 0.5 seconds until the frequency indication starts to change, then release. Scanning stops when the unit tunes in a station.

   Or

   Press **TUN. -/+** repeatedly.
3. Adjust the volume by rotating **VOLUME** on the unit or by pressing **VOLUME Λ/V** on the remote control repeatedly.

Presetting the Radio Stations

You can preset 50 stations for FM/AM .

Before tuning, make sure to turn down the volume.

1. Press **FUNCTION** until FM/AM appears in the display window.
2. Select the desired frequency by pressing **TUN. -/+**.
3. Press **PROGRAM/MEMO** a preset number will flash in the display window.
4. Press **PRESET Λ/V** to select the preset number you want.
5. Press **PROGRAM/MEMO**. The station is stored.
6. Repeat steps 2 to 5 to store other stations.
7. To listen a preset station, press **PRESET Λ/V**.

Deleting all the saved stations

1. Press and hold **PROGRAM/MEMO** for two seconds. "ERASE ALL" will flash up on the unit display.
2. Press **PROGRAM/MEMO** to erase all saved radio stations.

Improving poor FM reception

Press ▶/II on the remote control. This will change the tuner from stereo to mono and usually improve the reception.

Sound adjustment

Setting the surround mode

This system has a number of pre-set surround sound fields. You can select a desired sound mode by using **EQ.**

The displayed items for the Equalizer may be different depending on sound sources and effects.

On Display	Description
AUTO EQ	Sets the sound equalizer on the mode that is the most similar to the genre which is included in the MP3 ID3 tag of song files.
POP CLASSIC ROCK	This program lends an enthusiastic atmosphere to the sound, giving you the feeling you are at an actual pop, classic or rock concert.
BASS BLAST	Reinforce the treble, bass and surround sound effect.
BYPASS	You can enjoy the sound without equalizer effect.

Note

Maybe you need reset the surround mode, after switching the input, sometimes even after the sound track changed.

Setting the Clock

1. Turn the unit on.
2. Press **CLOCK** for at least 2 seconds.
3. Choose time mode by pressing I◀◀/▶▶I.
   - AM 12:00 (for an AM and PM display) or 0:00 (for a 24 hour display)
4. Press **SET** to confirm your selection.
5. Select the hours by pressing I◀◀/▶▶I.
6. Press **SET**.
7. Select the minutes by pressing I◀◀/▶▶I.
8. Press **SET**.

Using your player as an alarm clock

1. Turn the unit on.
2. Press **TIMER**. Each functions flashes.
3. Press **SET** when the function you want to be woken by is showing.
4. "ON TIME" will be displayed. This is your desired time to unit turns on. Press I◀◀/▶▶I to change the hours and minutes and press **SET** to save.
5. The "OFF TIME" will be displayed. This is your desired time to unit turns off.
6. Press I◀◀/▶▶I to change the hours and minutes and press **SET** to save.
7. Press I◀◀/▶▶I to change the volume and press **SET** to save. The clock icon "◷" shows that the alarm is set.
8. Press **TIMER** button 2 times. You can check the setting status.

Note

- If you set the clock time, you can check the time by pressing **CLOCK** even when the player is turned off.
- If you set the clock time and alarm, you can check the alarm icon "◷" by pressing **CLOCK** even when the player is turned off.
- If you set the clock time and alarm, you can check the alarm icon "◷" and setting informaiton by pressing **TIMER** even when the unit is turned off. Then this function will working in everyday.

Sleep Timer Setting

Press **SLEEP** repeatedly to select delay time between 10 and 180 minutes. After the delay time, unit will turn off.

To cancel the sleep function, press **SLEEP** repeatedly until "SLEEP 10" appears, and then press **SLEEP** once again while "SLEEP 10" is displayed.

Note

- You can check the remaining time before the unit turns off.
- Press **SLEEP**. The remaining time appears in the display window.
- Sleep function will working after dimmer.

Dimmer

Press **SLEEP** once. The display window will be darkening by half. To cancel it, press **SLEEP** repeatedly until dim off.

Advanced Operations

Listening to music from your external device

The unit can be used to play the music from many types of external device.
(Refer to the page 9)

1. Connect the external device to the PORT. IN connector of the unit.
2. Turn the power on by pressing ⏻/| **(Power)**.
3. Select the PORTABLE function by pressing **FUNC.** on the unit or **FUNCTION** on the remote control.
4. Turn the external device and start it playing.

Recording to USB

1. Connect the USB device to the unit.
2. Select a function by pressing **FUNC.** on the unit or **FUNCTION** on the remote control.

   One track recording - You can record to USB after playing a file you want.
   All tracks recording - You can record to USB after stop.
   Program list recording - After showing the programmed list, you can record it to USB.
3. Start the recording by pressing **REC.** on the unit or ● **REC** on the remote control.
4. To stop recording, press ■.

Pausing recording

During recording, press **REC.** on the unit or ● **REC** on the remote control to pause recording. Press it again to restart recording. (Only Radio, Portable)

To select recording bit rate and speed

1. Press **REC.** on the unit or ● **REC** on the remote control for longer than 3 seconds.
2. Use ⏮◀◀/▶▶⏭ on the unit or remote control to select the bit rate.
3. Press **REC.** on the unit or ● **REC** on the remote control again to select the recording speed.
4. Press ⏮◀◀/▶▶⏭ on the unit or on the remote control to select a desired recording speed; (Only AUDIO CD)

   X1 SPEED
   - You can listen to music while recording it.

   X2 SPEED
   - You can just record the music file.
5. Press **REC.** on the unit or ● **REC** on the remote control to finish the setting.
6. To stop recording, press ■.

Note

- You can check the recording percentage rate for the USB record on the display window during the recording. (MP3/ WMA CD Only)
- During recording MP3/ WMA, there is no sound.
- When you stop recording during playback, the file that has been recorded at that time will be stored. (AUDIO CD Only)
- Do not remove the USB device or turn off the unit during USB recording. If not, an incomplete file may be made and not deleted on PC.
- If USB recording does not work, the message like "NO USB", "ERROR", "FULL" or "NO REC" is displayed on the display window.
- Multi card reader device or External HDD can not be used for USB recording.
- A file is recorded by about 512 Mbyte when you record for a long term.
- When you stop recording during playback, the file will not be stored.
- You may not store more than 999 files.
- It'll be stored as follows.

AUDIO CD	MP3/ WMA	The other source*
CD_REC TRK_001 TRK_002	FILE_REC ABC(File name) DEF(File name)	EXT_REC AUDIO_001 AUDIO_002

* : TUNER, PORTABLE and the like.

The making of unauthorized copies of copy-protected material, including computer programs, files, broadcasts and sound recordings, may be an infringement of copyrights and constitute a criminal offense. This equipment should not be used for such purposes.

Be responsible
Respect copyrights

Troubleshooting

Problem	Cause & Correction
No Power.	• The power cord is not plugged in. Plug in the power cord. • Check whether electricity failed. Check the condition by operating other electronic devices.
No sound.	• Check whether you select right function. Press FUNCTION and check the selected function. • Speaker cables are not connect correctly. Connect the speaker cables correctly. • The volume is set to minimum. Use the volume controller to adjust the volume.
The unit does not start playback.	• An unplayable disc is inserted. Insert a playable disc. • No disc is inserted. Insert a disc. • The disc is dirty. Clean the disc. (Refer to the page 18) • The disc is inserted upside down. Place the disc with the label or printed side facing upwards.
Radio stations cannot be tuned in properly.	• The antenna is positioned poorly. Adjust its position. • The signal strength of the radio station is too weak. Tune to the station manually. • No stations have been preset or preset stations have been cleared (when tuning by scanning preset channels). Preset some radio stations, see page 12 for details.
The remote control does not work properly.	• The remote control is not pointed at the remote sensor of the unit. Point the remote control at the remote sensor of the unit. • The remote control is too far from the unit. Operate the remote control within about 16 ft (5 m). • There is an obstacle in the path of the remote control and the unit. Remove the obstacle. • The battery in the remote control is exhausted. Replace the battery with new one.

Specifications

General	
Power supply	Refer to main label
Power consumption	Refer to main label
Net Weight	2.8 kg
External dimensions (W x H x D)	170 x 243 x 267 mm
Operating conditions Temperature	5 °C to 35 °C (41 °F to 95 °F) Operation status: Horizontal
Operating humidity	5 % to 85 %

Tuner	
FM Tuning Range	87.5 to 108.0 MHz or 87.50 to 108.00 MHz
AM Tuning Range	522 to 1.620 kHz, 520 to 1.710 kHz or 522 to 1.710 kHz

Amplifier	
Output Power	30 W + 30 W

CD	
Frequency Response	40 Hz to 20 kHz
Signal-to-noise ratio	70 dB
Dynamic range	55 dB

USB	
USB Version	USB 2.0 or USB 1.1
Bus Power Supply	DC 5 V ⎓ 500 mA

Speakers	
Type	2 Way 2 Speaker
Impedance	6 Ω
Rated Input Power	30 W
Max. Input Power	60 W
Net Dimensions (WxHxD)	150 x 243 x 164 mm
Net Weight(1EA)	1.7 kg

- Design and specifications are subject to change without notice.

Maintenance

Handling the Unit

When shipping the unit

Please save the original shipping carton and packing materials. If you need to ship the unit, for maximum protection, re-pack the unit as it was originally packed at the factory.

Keeping the exterior surfaces clean

Do not use volatile liquids such as insecticide spray near the unit.

Wiping with strong pressure may damage the surface.

Do not leave rubber or plastic products in contact with the unit for a long period of time.

Cleaning the unit

To clean the player, use a soft, dry cloth. If the surfaces are extremely dirty, use a soft cloth lightly moistened with a mild detergent solution. Do not use strong solvents such as alcohol, benzine, or thinner, as these might damage the surface of the unit.

Maintaining the Unit

The unit is a high-tech, precision device. If the optical pick-up lens and disc drive parts are dirty or worn, the picture quality could be diminished. For details, please contact your nearest authorized service center.

Notes on Discs

Handling Discs

Never stick paper or tape on the disc.

Storing Discs

After playing, store the disc in its case. Do not expose the disc to direct sunlight or sources of heat and never leave it in a parked car exposed to direct sunlight.

Cleaning Discs

Do not use strong solvents such as alcohol, benzine, thinner, commercially available cleaners, or anti-static spray intended for older vinyl records.

Trademarks and Licenses



LG
Life's Good



Atención al Cliente

País	Teléfono	País	Teléfono
México	01-800-347-1919	Costa Rica	1-800-507-5454
Colombia	01-8000-910683	Rep. Dominicana	00-800-751-5454
Chile	800-26-1054	Guatemala	1-801-422-5454
Ecuador	1-800-545454	El Salvador	00-800-6309
Venezuela	800-5424477	Cuba	204-3333
Panamá	800-5454	Miami, USA	1-305-477-1882
Perú	0-800-1-2424	Bolivia, La Paz	800-100-545
Puerto Rico	001-800-510-9564	Nicaragua	001-800-507-0007
Argentina	0800-888-5454 (Capital y GBA) / 0810-555-5454 (Interior del país)		

LG www.lgservice.com