
LG
Life's Good

LG
Life's Good

ENGLISH
FRANÇAIS
ESPAÑOL

OWNER'S MANUAL
REFRIGERATOR

Please read this manual carefully before operating your set and retain it for future reference.

P/No.:3828JS8023X

www.lg.com

Table of Contents

Introduction

Important Safety Instruction 4

Identification of Parts 6

Installation

Location 7

Installation with/without Top Table 7

Adjusting Leveling Screws 8

Operation

Starting 9

Temperature Control 9

Defrost 10

Suggestion On Food storage

Storing food 11

Evaporator Compartment 11

Refrigerator Compartment 11

Care and Maintenance

General Information 12

Lamp Replacing 13

Cleaning 13

Trouble Shooting

Trouble Shooting 14

To Reverse the Doors

How to Reverse the Door 16

How to Reverse the Eva Door 17

Important Safety Instruction

Precaution

This fridge must be properly installed and located in accordance with the Installation Instruction before it is used.

Never unplug your fridge by pulling on the power cord. Always grip plug firmly and pull straight out from the outlet.

When moving your appliance away from the wall, be careful not to roll over or damage the power cord.

After your fridge is in operation, do not touch the cold surfaces in the Evaporator Compartment, particularly when hands are damp or wet. Skin may adhere to these extremely cold surfaces.

Pull out the power plug prior to cleaning the fridge.
Never damage, severely bend, pull out, or twist the power cord because power cord damage may cause a fire or electronic shock.
Never place glass products in the evaporator because they may be broken when their inner contents are frozen.

Don't Use an Extension Cord

If possible, connect the fridge to its own individual electrical outlet to prevent it and other appliances or household lights from causing an overload.

Accessibility of Supply Plug

The supply plug of the refrigerator should be placed in easy accessible position for quick disconnection in emergency.

Supply Cord Replacement

If the supply cord is damaged, it must be replaced by the manufacturer or its service agent or a similarly qualified person in order to avoid a hazard.

Important Safety Instruction

Danger

Risk of child entrapment.
Before you throw away your old refrigerator:
Take off the doors.
Leave the shelves in place so that children may not easily climb inside.

Don't store

Don't store or use gasoline or other flammable vapors and liquids in the vicinity of this or any other appliance.

Grounding (Earthing)

In the event of an electric short circuit, grounding (earthing) reduces the risk of electric shock by providing an escape wire for the electric current. In order to prevent possible electric shock, this appliance must be grounded. Improper use of the grounding plug can result in an electric shock.

Consult a qualified electrician or service person if the grounding instructions are not completely understood, or if you have doubts on whether the appliance is properly grounded.

⚠WARNING

- ⚠ Keep ventilation openings, in the appliance enclosure or in the built-in structure, clear of obstruction.
- ⚠ Do not use mechanical devices or other means to accelerate the defrosting process, other than those recommended by the manufacturer.
- ⚠ Do not damage the refrigerant circuit.
- ⚠ Do not use electrical appliances inside the food storage compartments of the appliance, unless they are of the type recommended by the manufacturer.
- ⚠ The refrigerant and insulation blowing gas used in the appliance require special disposal procedures. At disposal, please consult with service agent or a similarly qualified person.

⚠CAUTION

This appliance is not intended for use by persons (including children) with reduced physical, sensory or mental capabilities, or lack of experience and knowledge, unless they have been given supervision or instruction concerning use of the appliance by a person responsible for their safety.
Children should be supervised to ensure that they do not play with the appliance.

Identification of Parts

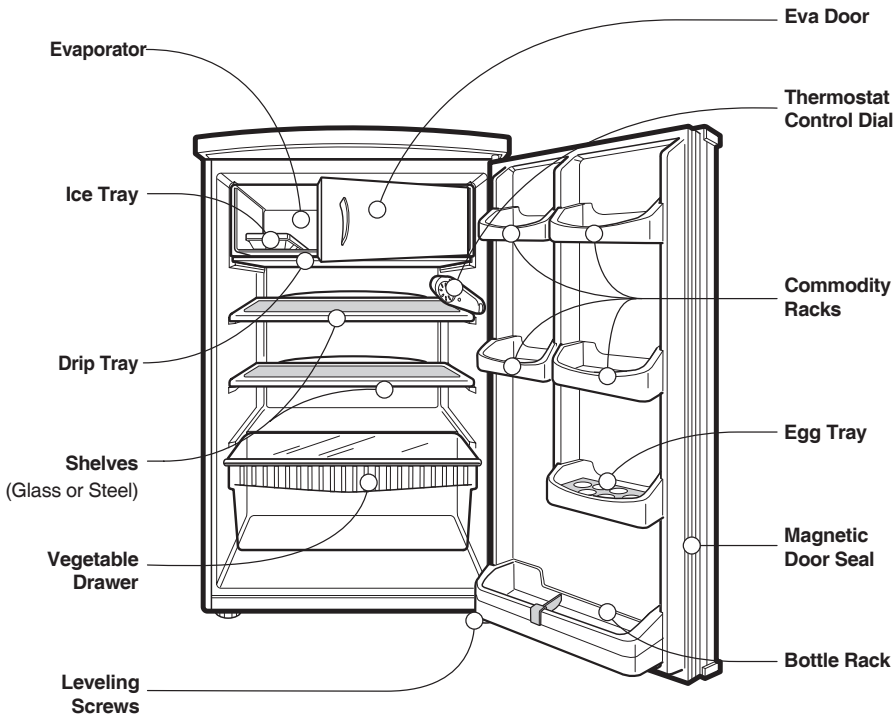

Location

⚠WARNING

Try not to use the refrigerator for a prolonged time where the temperature drops below 16°C or rises above 32°C.

- Avoid placing the refrigerator near any heat sources, direct sunlight or moisture.
- Sufficient air circulation is essential for the efficient operation of your refrigerator.
- To ensure proper air circulation around the fridge, please maintain sufficient space on both the sides as well as top and maintain at least 2 inches (5 cm) from the rear wall.
- If your refrigerator is placed in a recessed area in the wall, allow at least 30 mm or greater clearance above the refrigerator and 25 mm or more from the wall.
- If the floor is carpeted, the refrigerator should be elevated 25 mm from the floor.

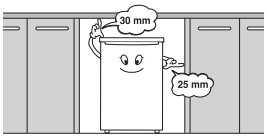

Installation with/without Top Table

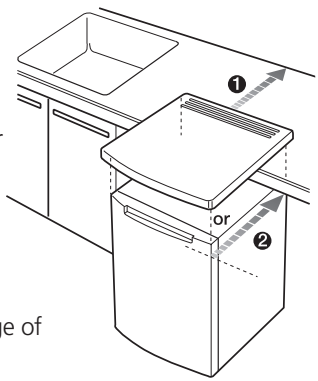

1. When installing with Top Table (free standing), push the refrigerator until the air circulating hole of Top Table nearly reaches the wall.
2. When installing without Top Table, align the door front edge to the front edge of kitchen furniture.

How to Remove Top Table

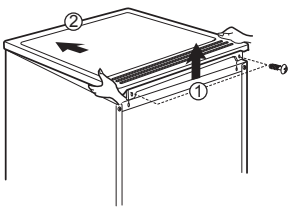

1. Unscrew 2 bolts at the rear of top table.
2. Hold the rear of top table and push forwoards with lifting up top table slightly.

Adjusting Leveling Screws

- To avoid vibrations the refrigerator has to be placed on a leveled surface.
- If necessary, set the leveling screws to compensate the unevenness of the floor. The front should be slightly higher than the rear so that the door can close more easily.
- The Leveling Screws can be adjusted by tilting the refrigerator slightly.
- Turning the Leveling Screw clockwise, the refrigerator is raised.

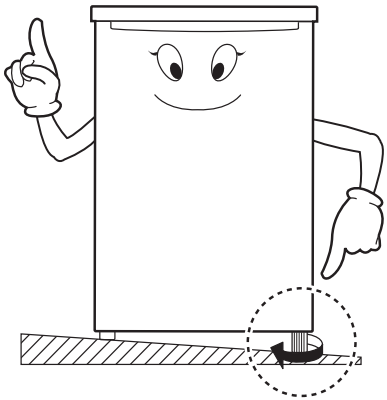

Next

- Clean your refrigerator thoroughly and wipe off all dust accumulated during transit.
- Install accessories such as ice tray, shelf, etc., in their proper places. They are packed together to prevent possible damage during transit
- Connect the power supply cord to the AC outlet. Don't double up with other appliances on the same outlet.
- Prior to use, leave your refrigerator on for 2 or 3 hours. Check the flow of cold air on the evaporator to ensure proper cooling.

Starting

When first turning refrigerator on, allow it to operate for at least 2 to 3 hours to stabilize at normal temperature before loading it with fresh food.

If operation is interrupted, allow a 5 minutes delay before restarting.

Temperature Control

NOTE

The DRIP TRAY under the evaporator should be installed exactly to contact with the interior wall.

TEMPERATURE CONTROL regulates the temperature in the evaporator and is displayed in OFF, 1, 2,...7.

Refrigerator Compartment is cooled by the cold air from the evaporator.

Too Warm

Turning the TEMPERATURE CONTROL clockwise will set to a colder setting (higher number setting).

Too Cold

Turning the TEMPERATURE CONTROL counterclockwise will set to a warmer setting (lower number setting).

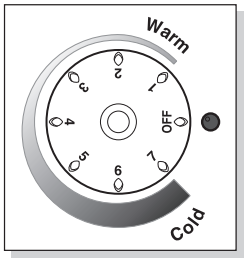

Setting the TEMPERATURE CONTROL depends on location of the refrigerator, room temperature, and how often the refrigerator door.

Defrosting

- It is necessary to regularly defrost your refrigerator in order to ensure efficient operation. The frost on the surface of the evaporator should not exceed 6mm before defrosting.
- **To defrost, turn the control to 'OFF'.**
- Before you start the defrosting operation, remove food from the evaporator, and wrap it with paper or cloth, then put it in a cold place or in another refrigerator. Place the DRIP TRAY in its proper position.

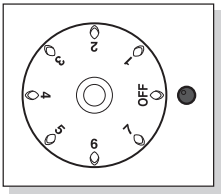

- If you place a bottle containing warm water in the evaporator, defrosting time can be reduced.
- When defrosting is completed, remove the drip tray, empty water, dry and put it back to its normal position. Turn the control dial to a desired temperature.

CAUTION

Never use any sharp or metallic instruments to remove ice, frost or ice tray from the evaporator.

Storing Food

- How food is frozen and defrosted is an important factor in maintaining freshness and flavor.
- Do not store food which goes bad easily at low temperatures, such as bananas, pineapples and melons.
- Allow hot food to cool prior to storing. Adding too much warm food to the refrigerator could spoil other food, and lead to high electric bills.
- Do not open doors too frequently. Whenever the door is opened, warm air enters the refrigerator, causing temperatures to rise.

Evaporator Compartment

- Do not store bottles in the evaporator compartment –they may break when frozen.
- Do not refreeze food that has been completely thawed. This causes loss of taste and nutritional value.

Refrigerator Compartment

- When storing, wrap food in vinyl, or place in a covered container. This prevents moisture from evaporating, and helps food to keep its taste and nutrients.
- Always clean food prior to refrigeration. Vegetables and fruits should be washed and wiped, and packed food should be wiped clean, to prevent adjacent food from spoiling.
- Food with odor (fish, cheese, butter etc.) should be wrapped securely or stored in closed containers.

NOTE

In case of placing a big bottle in the COMMODITY RACK, if excessive force is used to open/close the door, the bottle may fall down, so be careful.

General Information

Going away

When you plan to be away for an extended period, remove all food, disconnect the power cord, clean the interior thoroughly, and leave the door OPEN to prevent odor formation.

Power Failure

Most power failures are corrected in an hour or two and will not affect your refrigerator temperatures. However, you should minimize the number of door openings while the power is OFF. During power failures of longer duration, place a block of dry ice on top of your frozen packages.

If you move

Remove all items inside the refrigerator or securely fasten all loose items. To avoid damaging the leveling screw, turn them all the way into the base.

Anti Condensation Pipe

- The Anti-Condensation pipe is installed around the front side of fridge to prevent dewing.
- Especially after installation or when ambient temperature is high, the fridge may feel hot, which is quite normal.

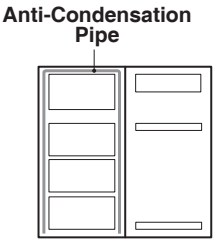

Disposal of your old appliance

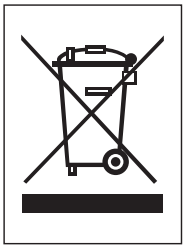

1. When this crossed-out wheeled bin symbol is attached to a product it means the product is covered by the European Directive 2002/96/EC.
2. All electrical and electronic products should be disposed of separately from the municipal waste stream via designated collection facilities appointed by the government or the local authorities.
3. The correct disposal of your old appliance will help prevent potential negative consequences for the environment and human health.
4. For more detailed information about disposal of your old appliance, please contact your city office, waste disposal service or the shop where you purchased the product.

• Information of fluorinated greenhouse gases used as refrigerant of this refrigerator.

Chemical name	Composition of Gases	Total GWP (kg CO_2-eq)
R-134a	100% HFC-134a	1300

Lamp Replacing

⚠ WARNING Unplug the Power Cord from the AC Outlet.

1. Take the DRIP TRAY and Shelves out to make access easier.
2. Hold the COVER LAMP, Take it out softly from the Thermostat Enclosure with twisting up and down.

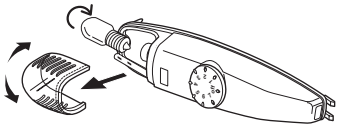

3. Turn the lamp counterclockwise, and replace it.
4. Assemble in reverse order of disassembly. Replacement bulb must be the same specification as original.

Cleaning

- It is important that your refrigerator be kept clean to prevent undesirable odors. Spilled food should be wiped up immediately, since it may acidify and stain plastic surfaces.
- Never use metallic scouring pads, brushes, coarse abrasive cleaners or strong alkaline solutions on any surface.
- Before you clean, however, remember that damp objects will stick or adhere to extremely cold surfaces. Do not touch frozen surfaces with wet or damp hands.

Exterior Use a lukewarm solution of mild soap or detergent to clean the durable finish of your refrigerator. Wipe with a clean, damp cloth and then dry.

Interior Regular cleaning of the interior and interior parts is recommended. Disconnect the power cord, and remove food and shelves, trays etc. Wash all compartment and shelves, trays etc. with a baking soda solution. Rinse and dry.

Before calling for service, check this list.
It may save you both time and expense.
This list includes common occurrences that are not the result of defective workmanship or materials in this appliance.

Problem	Possible Causes
Fridge does not operate	• **Power plug may be unplugged from the electric outlet.** Plug it in securely. • **House fuse has blown or circuit breaker has tripped.** Check and/or replace fuse and reset circuit breaker. • **Power cut.** Check house lights.
Vibration or Rattling or Abnormal Noise	• **The floor on which the fridge is installed may be uneven or the fridge may be unstable.** Make it even by rotating the leveling screw. • **Unnecessary objects placed in the back side of the fridge.**
Frost or Ice Crystals on frozen Food	• **Door may have been left ajar or package holding door open.** • **Too frequent or too long door openings.** • **Frost within package is normal.**
Moisture forms on Cabinet Surface	• **This phenomenon is likely to occur in a wet space.** Wipe it with a dry towel.

Problem	Possible Causes
Moisture collects inside	• **Too frequent or too long door openings.** • **In humid weather, air carries moisture into fridge when doors are opened.**
Fridge has odor	• **Foods with strong odors should be tightly covered or wrapped.** • **Check for spoiled food.** • **Interior needs cleaning.** Refer to CLEANING section.
Interior light does not work	• **No power at outlet.** • **Light lamp needs replacing.** Refer to the Lamp Replacement section.

How to Reverse the Door

Your refrigerator is designed with a reversible door, so you may open from either left or right. It is best to reposition the door hinge as necessary at the outset since it is inconvenient to do so later.
To change the door hinge please refer to the diagram below and proceed as follows.

Precaution

1. First unplug the appliance.
2. Remove foods and accessories like shelves or trays which are not fixed in the refrigerator.
3. Carefully lay the appliance on a cushion like packing material without the damage of refrigeration circuit.
4. Use '+' driver or spanner to fix or remove the bolts.

1. Unscrew the 2xBOLTS ①, then remove the hinge (L) ②.
2. Remove the LEG ③.
3. Gently pull the door downwards to remove it.
4. Before refitting the door, swap the Hinge Cap ④ by pulling it out from its current location and repositioning it on the other side of the door. Care should be taken not to damage the adjacent surfaces when removing the Hinge Cap.
5. Unscrew the Upper Hinge pin (U) ⑤ and screw it into the opposite side hole.

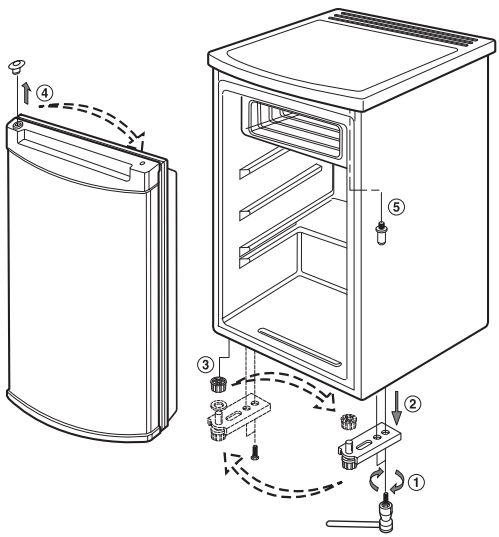

How to Reverse the Door

6. After refit the door, fix the Lower Hinge(L) in the apposite side by using 2xBOLTS.
7. Fix the Leg.
8. Carefully place the appliance in an upright position. Use the Leveling screw not to vibrate the appliance, and check that the door opens and closes properly.

NOTE

In case of applying Reversible door, When you close the door with excessive force, there could be the case that the door doesn't close because of Reaction force. Please ascertain if the door closes properly.

NOTE

Reversing the doors is not covered by the warranty.

How to Reverse the Eva Door

When repositioning the Refrigerator Door hinge, you should also change the EVA Door hinge for convenience. Please refer to the diagram below and proceed as follows

1. Open the EVA DOOR, and Grasp the Bottom side of the EVA DOOR Hinge.
2. Take it out forwards ② by lifting it slightly up ①.
3. Rotate the EVA DOOR 180 degrees, and insert EVA DOOR to opposite side top hole first, then in to the Bottom side hole.
4. Check that EVA DOOR is installed properly.

