Model	VC1015NND		
Language	English		
Page	11	Color(cover/body)	1/1
Material	Weight 80g	Size(W*H)	150×220(mm)
Date	2011.08.17	Designer	Zhu Li
Part No	MFL67021720	Description	Owners Manual

Chage Record

No.	Change content	ECO No.	Date	Designer	Confirm
1					
2					
3					
4					
5					
6					
7					
8					
9					

LG
Life's Good

ENGLISH

OWNER'S MANUAL

NEW TYPE CYCLONE VACUUM CLEANER

This information contains important instructions for the safe use and maintenance of the vacuum cleaner. Especially, please read all of the information on page 4, 5 for your safety. Please keep this manual in an easily accessible place and refer to it anytime.

VC1015NND

P/No.:MFL67021720

www.lg.com

Basic Parts

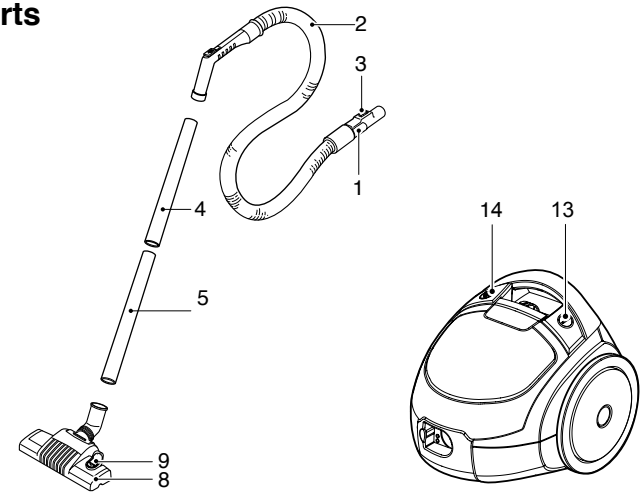

Optional Parts

- The different figure and quantity of the following parts depend on the different models which you have bought.

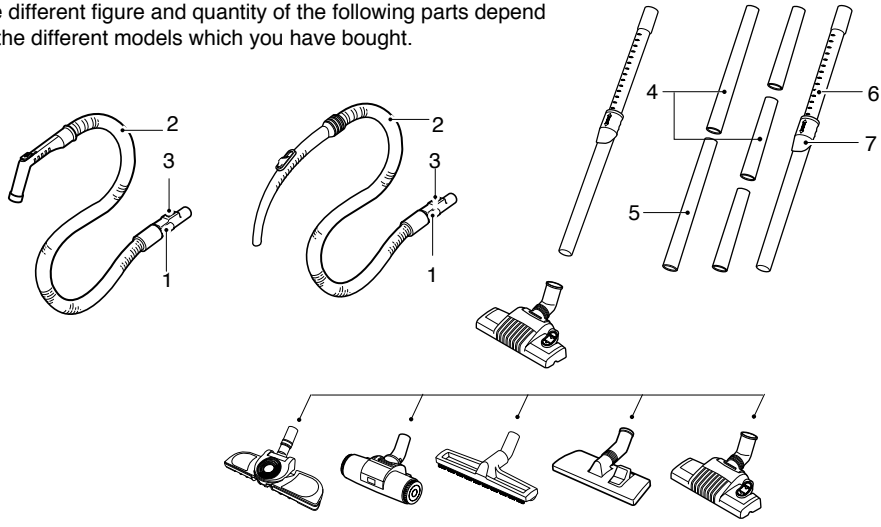

Accessory

- These specifications are subject to change according to the agent/buyer's request.

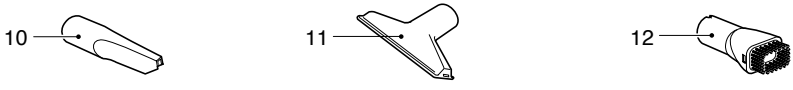

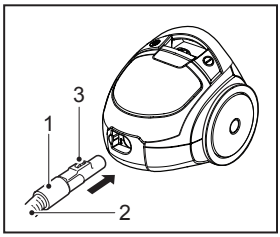
1
2
3

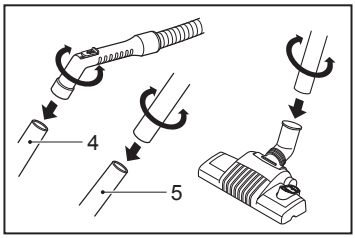
4
5

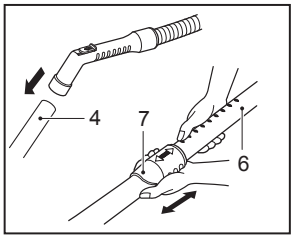
4
7
6

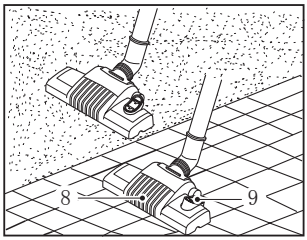
8
9

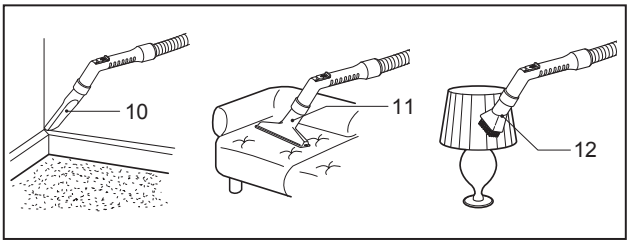
10
11
12

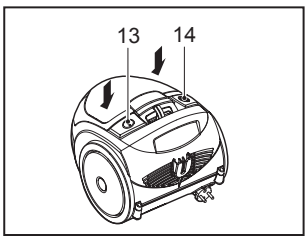
13
14

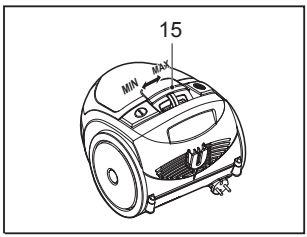
15
MIN
MAX

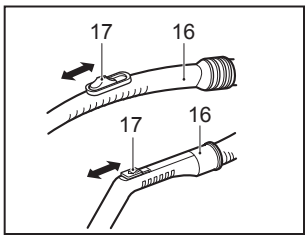
17
16
17
16

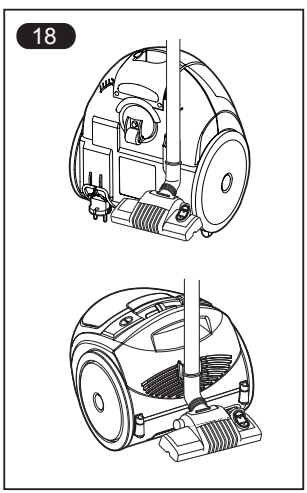
18

19

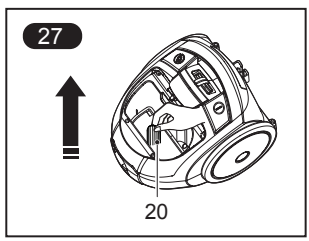
27
20

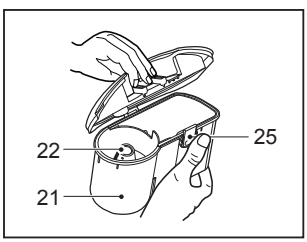
22
21
25

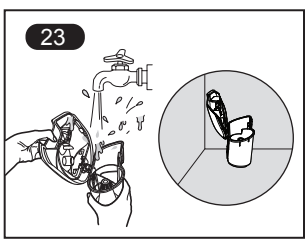
23

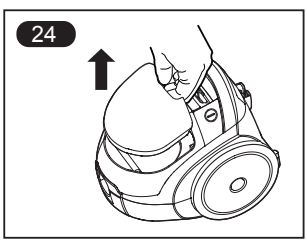
24

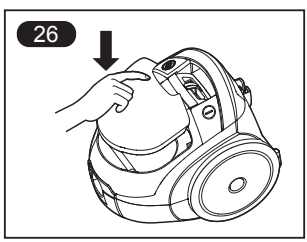
26

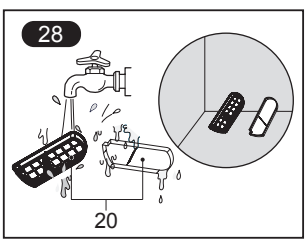
28
20

IMPORTANT SAFETY INSTRUCTIONS

Read and follow all instructions before using your vacuum cleaner to prevent the risk of fire,electric shock, personal injury,or damage when using the vacuum cleaner.This guide do not cover all possible conditions that may occur.Always contact your service agent or manufacturer about problems that you do not understand. This appliance complies with the following ECDirectives:-2006/95/EC Low Voltage Directive-2004/108/EC EMC Directive.

This is the safety alert symbol.
This symbol alerts you to potential hazards that can kill or hurt you and others.
All safety messages will follow the safety alert symbol and either the word “WARNING” or “CAUTION.” These words mean:

WARNING This symbol will alert you to hazards or unsafe practices which could cause serious bodily harm or death.

CAUTION This symbol will alert you to hazards or unsafe practices which could cause bodily injury or property damage.

WARNING

- **Disconnect electrical supply before servicing or cleaning the unit or when cleaner is not in use.**
  Failure to do so could result in electrical shock or personal injury.
- **Do not use vacuum cleaner to pick up anything that is burning or smoking such as cigarettes, or hot ashes.**
  Doing so could result in death, fire or electrical shock.
- **Do not vacuum flammable or explosive substances such as gasoline, benzene, thinners, propane (liquids or gases).**
  The fumes from these substances can create a fire hazard or explosion. Doing so could result in death or personal injury.
- **Do not handle plug or vacuum cleaner with wet hands.**
  Doing so could result in death or electrical shock.
- **Do not unplug by pulling on cord.**
  Doing so could result in product damage or electrical shock. To unplug, grasp the plug, not the cord.
- **Keep hair, loose clothing, fingers, and all parts of the body away from openings and moving parts.**
  Failure to do so could result in electrical shock or personal injury.
- **Do not pull or carry by cord, use cord as a handle, close a door on cord, or pull cord around sharp edges or corners. Do not run vacuum cleaner over cord. Keep cord away from heated surfaces.**
  Failure to do so could result in electrical shock or personal injury or fire or product damage.
- **Do not allow to be used as toy. Close attention is necessary when used by or near children.**
  Personal injury or product damage could result.
- **Do not use the vacuum cleaner if the power cord or plug is damaged or faulty.**
  If the power cord is damaged, it must be replaced by an approved LG Electronics Service Agent to avoid a hazard.
- **Do not use vacuum cleaner if it has been under water.**
  Personal injury or product damage could result. In these cases, contact LG Electronics Service Agent to avoid hazard.

⚠ WARNING

- **Do not continue to vacuum if any parts appear missing or damaged.**
  Personal injury or product damage could result. In these cases, contact LG Electronics Service Agent to avoid hazard.
- **Do not use an extension cord with this vacuum cleaner**
  Fire hazard or product damage could result.
- **Using proper voltage.**
  Using improper voltage may result in damage to the motor and possible injury to the user. Proper voltage is listed onthe bottom of vacuum cleaner.
- **Turn off all controls before unplugging.**
  Failure to do so could result in electrical shock or personal injury.
- **Do not change the plug in any way.**
  Failure to do so could result in electrical shock or personal injury or product damage. Doing so result in death. If plug does not fit, contact a qualified electrician to install the proper outlet.
- **Repairs to electrical appliances may only be performed by qualified service engineers.**
  Improper repairs may lead to serious hazards for the user.
- **Do not plug in if control knob is not in OFF position.**
  Personal injury or product damage could result. (Depending on model)
- **Keep children away and beware of obstructions when rewinding the cord to prevent personal injury.**
  The cord moves rapidly when rewinding. (Depending on model)
- **The hose contains electrical wires. Do not use it if it is damaged, cut or punctured.**
  Failure to do so could result in death,or electrical shock. (Depending on model)

IMPORTANT SAFETY INSTRUCTIONS

⚠ CAUTION

- **Do not put any objects into openings.**
  Failure to do so could result in product damage.
- **Do not use with any opening blocked: keep free of dust, lint, hair, and anything that may reduce air flow.**
  Failure to do so could result in product damage.
- **Do not use vacuum cleaner without dust tank and/or filters in place.**
  Failure to do so could result in product damage.
- **Do not use vacuum cleaner to pick up sharp hard objects, small toys, pins, paper clips, etc.**
  They may damage the cleaner or dust tank.
- **Store the vacuum cleaner indoors.**
  Put the vacuum cleaner away after use to prevent tripping over it.
- **This appliance is not intended for use by persons (including children) with reduced physical, sensory or mental capabilities, or lack of experience and knowledge, unless they have been given supervision or instruction concerning use of the appliance by a person responsible for their safety.**
  Children should be supervised to ensure that they do not play with the appliance.
- **Only use parts produced or recommended by LG Electronics Service Agents.**
  Failure to do so could result in product damage.
- **Use only as described in this manual. Use only with LG recommended or approved attachments and accessories.**
  Failure to do so could result in personal injury or product damage.
- **To avoid personal injury and to prevent the machine from falling when cleaning stairs, always place it at the bottom of stairs.**
  Failure to do so could result in personal injury or product damage.
- **Make sure the filters (exhaust filter and motor safety filter) are completely dry before replacing in the machine.**
  Failure to do so could result in product damage.
- **Do not dry the filter in an oven or microwave.**
  Failure to do so could result in fire hazard.
- **Do not dry the filter in a clothes dryer.**
  Failure to do so could result in fire hazard.
- **Do not dry near an open flame.**
  Failure to do so could result in fire hazard.
- **Always clean the dust tank after vacuuming carpet cleaners or fresheners, powders and fine dust.**
  These products clog the filters,reduce airflow and can cause damage to the cleaner. Failure to clean the dust tank could cause permanent damage to the cleaner. (Depending on model)
- **Don ’t grasp the tank handle when you are moving the vacuum cleaner.**
  The vacuum cleaner’s body may fall when separating tank and body. Personal injury or product damage could result. **You should grasp the carrier handle** when you are moving the vacuum cleaner. (Depending on model)

IMPORTANT SAFETY INSTRUCTIONS

⚠ CAUTION

Thermal protector :

This vacuum cleaner has a special thermostat that protects the vacuum cleaner in case of motor overheating. If the vacuum cleaner suddenly shuts off, turn off the switch and unplug the vacuum cleaner. Check the vacuum cleaner for possible source of overheating such as a full dust tank, a blocked hose or clogged filter. If these conditions are found, fix them and wait at least 30 minutes before attempting to use the vacuum cleaner. After the 30 minute period, plug the vacuum cleaner back in and turn on the switch.

How to Use

Connecting the flexible hose

Push the end of the head **(1)** on the flexible hose **(2)** into the attachment point on the vacuum cleaner.

To remove the flexible hose from the vacuum cleaner, push the button **(3)** situated on the head, then pull upwards.

Assembling the tubes

(depending on model)

- **Metal tube (4,5)**
  - Fit together the two tubes by twisting slightly.
- **Telescopic tube (6)**
  - Push spring latch **(7).**
  - Pull out tube to required length.
  - Release spring latch to lock.

Using the cleaning head and Accessory Nozzles (depending on model)

Fit the large cleaning head onto the end of the tube.

- **The 2 position head (8)** is equipped with a pedal **(9)** which allows you to alter its position according to the type of floor to be cleaned.
  Hard floor position (tiles, parquet floors...): Push the pedal to lower the brush.
  Carpet or rug position: Push the pedal to lift the brush up.
- **Crevice Tool (10)**

  For vacuuming in those normally inaccessible places i.e. reaching cobwebs, or down the side of a sofa!
- **Upholstery Nozzle (11)**

  For vacuuming upholstery, mattresses, etc. The thread collectrors help to pick up the threads and fluff.
- **Dusting brush (12)**

  For vacuuming picture frames furniture outlines, books and other uneven objects.

How to plug in and use

Pull out the mains lead to the desired length and plug into the socket.

Push the button **(13)** to start the vacuum cleaner. To stop it press the button **(13)** again.

Adjusting the power level

(depending on model)

- Suction capacity increases steplessly up to MAX.**(15)**
- The flexible hose handle **(16)** has a manual air flow regulator **(17)** which allows you to briefly reduce the suction level.

Carrying and storage

When you have switched off and unplugged the appliance, push the button **(14)** to automatically rewind the cord.

- Use stowage clip as shown when storing the cleaner **(18).**

Emptying the dust tank

The cleaner is set to maximum power and the nozzle is off the floor. As below, if these things happen to your vacuum cleaner, please turn off the appliance, unplug it and remove hose. Take out the dust tank **(24)** and motor safety filter **(20)** from the cleaner. Then empty the dust tank **(19)** and clean the motor safety filter **(20).**

- When the dust in the tank **(21)** reaches the maximum line.
- When a great deal of dust has clogged up the inner cover **(22).**
- When the motor safety filter **(20)** is full of dust.

Wash the dust tank **(23)** with cold water. Dry fully in shade so that moisture is removed entirely.

⚠ **If after empting the dust tank the suction is low, clean the motor safety filter.** Failure to do so could result in product damage.

Raising the dust tank

After turning off the appliance and unplug it, press the pushing button on the appliance and hold the tank handle, then raise the tank **(24)**.

Opening the dust tank

Please push the button **(25)** behind the tank, tank, then open the tank cover.

Fixing the dust tank

According to the arrow's direction **(26)**, please close the dust tank correctly and then put it in the vacuum cleaner.

Cleaning the motor safety filter

The motor safety filter is situated inside the appliance under the dust tank.
Each time that you clean the motor safety filter, we advise you to take out the motor safety filter **(27)**.

Wash it with cold water **(28)** and dry fully in shade so that moisture is removed entirely. And then replace it in the vacuum cleaner.

⚠ **Do not use vacuum cleaner without motor safety filter.**
Failure to do so could result in motor damage and weak suction.

What to do if your appliance does not work ?

Check that the appliance is correctly plugged in and that the electrical socket is working.

What to do when the suction performance reduces?

- Stop the appliance and unplug it.
- Check that the tubes, flexible hose and cleaning tool are not blocked.
- Check dust in the tank does not reach the maximum line. Empty the dust tank if necessary.
- Check that the inner cover **(22)** is not clogged, Clean up it if necessary.
- Check that the motor safety filter **(20)** is not full of dust. Clean up it if necessary.

WARRANTY

This LG Vacuum Cleaner comes with 12 months warranty, from the date of purchase against defective material or workman ship subject to following terms & conditions. In case of a defect, LG Electronics India Limited undertakes to get the set repaired free of charge.

INSTRUCTIONS FOR THE CUSTOMER

1. This warranty card has 2 parts. Kindly ensure that the dealer fills all parts correctly.
2. Part A is the custorner's copy. It should be retained by you for record.
3. Part B must be torn and mailed to the nearest LG ELECTRONICS BRANCH OFFICES listed in this booklet. If not, please tell the dealer to keep Part B for collection.
4. In the event of a defect developing in the product, contact the authorized LG Electronics Service Centre, for obtaining warranty service and inform him of the defect ,Model No. & SI.No.

TERMS AND CONDITIONS

1. Repairs & Replacements will be carried out though authorized LG Electronics Service Centres.
2. For Units installed beyond the municipal limits of the jurisdiction of the authorizde LG Electronics Service Centres, all expenses incurred in collecting the units or parts there of, as well as expenses incurred with deputizing of service personnel/technicians towards conveyance and other incidentals etc. will be borne by the customer.
3. Components subject to wear, such as carbon brushes and Plastic part &/or accessories are not covered by this Warranty.
4. While the company will make every effort to carry out repairs at the earliest, it however is made expressly clear that the company is under no obligation to do so in a specified period of time.
5. The company or its authorized LG Electronics Service Centres reserves the right to retain any part(s) or components replaced at its discretion, in the event of a defect being noticed in the equipment during the warranty period.
6. Warranty does not cover accessories external to the equipment supplied by the dealer.

CUSTOMER COPY **PART A**

MODEL NO.:
UNIT Sr.No.:

DATE OF PURCHASE:

CUSTOMER NAME & ADDRESS	DEALER NAME & ADDRESS
TEL.	TEL.

Customer's Signature Dealer's Signature

This card is valid only if it is filled in and stamped by our authorized dealer on the date of purchase.

Warranty voids if:

1. The warranty card is not completed properly at the time of purchase. 2.The completed warranty card is not presented to authorized personnel at the time of service of the product. 3. The Vacuum Cleaner is not operated according to instructions given in the"Owner's Manual" booklet. 4.Defects are caused by improper or reckless use ,which shall determined by company personnel. 5. Any repair work is carried out by persons other than authorized company personnel. 6. Defects are caused due to causes beyond control like lightning, abnormal votage, acts of God or while in transit to service centre or purchaser's residence. 7. The warranty is not valid in case ,the Serial Number is deleted, defected or altered.ã

COMPANY COPY **PART B**

MODEL NO.:
UNIT Sr.No.:

DATE OF PURCHASE:

CUSTOMER NAME & ADDRESS	DEALER NAME & ADDRESS
TEL.	TEL.

Customer's Signature Dealer's Signature

This card is valid only if it is filled in and stamped by our authorized dealer on the date of purchase.

LG Electronics

LG
Life's Good