LG
Life's Good

OWNER'S MANUAL

DVD MINI HI-FI SYSTEM

Please read this manual carefully before operating your set and retain it for future reference.

MBD66 (MBD66, MDS64V)
MBD106 (MBD106, MDS104V)

MFL67340751

Safety Information

CAUTION: TO REDUCE THE RISK OF ELECTRIC SHOCK DO NOT REMOVE COVER (OR BACK) NO USER-SERVICEABLE PARTS INSIDE REFER SERVICING TO QUALIFIED SERVICE PERSONNEL.

This lightning flash with arrowhead symbol within an equilateral triangle is intended to alert the user to the presence of uninsulated dangerous voltage within the product's enclosure that may be of sufficient magnitude to constitute a risk of electric shock to persons.

The exclamation point within an equilateral triangle is intended to alert the user to the presence of important operating and maintenance (servicing) instructions in the literature accompanying the product.

WARNING: TO PREVENT FIRE OR ELECTRIC SHOCK HAZARD, DO NOT EXPOSE THIS PRODUCT TO RAIN OR MOISTURE.

WARNING: Do not install this equipment in a confined space such as a book case or similar unit.

CAUTION: Do not block any ventilation openings. Install in accordance with the manufacturer's instructions.
Slots and openings in the cabinet are provided for ventilation and to ensure reliable operation of the product and to protect it from over heating. The openings shall be never be blocked by placing the product on a bed, sofa, rug or other similar surface. This product shall not be placed in a built-in installation such as a bookcase or rack unless proper ventilation is provided or the manufacturer's instruction has been adhered to.

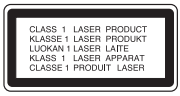

CAUTION: This product employs a Laser System. To ensure proper use of this product, please read this owner's manual carefully and retain it for future reference. Shall the unit require maintenance, contact an authorized service center.
Use of controls, adjustments or the performance of procedures other than those specified herein may result in hazardous radiation exposure.
To prevent direct exposure to laser beam, do not try to open the enclosure.

CAUTION concerning the Power Cord

Most appliances recommend they be placed upon a dedicated circuit;

That is, a single outlet circuit which powers only that appliance and has no additional outlets or branch circuits. Check the specification page of this owner's manual to be certain. Do not overload wall outlets. Overloaded wall outlets, loose or damaged wall outlets, extension cords, frayed power cords, or damaged or cracked wire insulation are dangerous. Any of these conditions could result in electric shock or fire. Periodically examine the cord of your appliance, and if its appearance indicates damage or deterioration, unplug it, discontinue use of the appliance, and have the cord replaced with an exact replacement part by an authorized service center. Protect the power cord from physical or mechanical abuse, such as being twisted, kinked, pinched, closed in a door, or walked upon. Pay particular attention to plugs, wall outlets, and the point where the cord exits the appliance. To disconnect power from the mains, pull out the mains cord plug. When installing the product, ensure that the plug is easily accessible.

This device is equipped with a portable battery or accumulator.

Safety way to remove the battery or the battery from the equipment: Remove the old battery or battery pack, follow the steps in reverse order than the assembly. To prevent contamination of the environment and bring on possible threat to human and animal health, the old battery or the battery put it in the appropriate container at designated collection points. Do not dispose of batteries or battery together with other waste. It is recommended that you use local, free reimbursement systems batteries and accumulators. The battery shall not be exposed to excessive heat such as sunshine, fire or the like.

CAUTION: The apparatus shall not be exposed to water (dripping or splashing) and no objects filled with liquids, such as vases, shall be placed on the apparatus.

Copyrights

It is forbidden by law to copy, broadcast, show, broadcast via cable, play in public, or rent copyrighted material without permission. This product features the copy protection function developed by Macrovision. Copy protection signals are recorded on some discs. When recording and playing the pictures of these discs picture noise will appear. This product incorporates copyright protection technology that is protected by U.S. patents and other intellectual property rights. Use of this copyright protection technology must be authorized by Macrovision, and is intended for home and other limited viewing uses only unless otherwise authorized by Macrovision. Reverse engineering or disassembly is prohibited.

CONSUMERS SHOULD NOTE THAT NOT ALL HIGH DEFINITION TELEVISION SETS ARE FULLY COMPATIBLE WITH THIS PRODUCT AND MAY CAUSE ARTIFACTS TO BE DISPLAYED IN THE PICTURE. IN CASE OF 525 OR 625 PROGRESSIVE SCAN PICTURE PROBLEMS, IT IS RECOMMENDED THAT THE USER SWITCH THE CONNECTION TO THE 'STANDARD DEFINITION' OUTPUT. IF THERE ARE QUESTIONS REGARDING OUR TV SET COMPATIBILITY WITH THIS MODEL 525p AND 625p UNIT, PLEASE CONTACT OUR CUSTOMER SERVICE CENTER.

You have to set the disc format option to [Mastered] in order to make the discs compatible with the LG players when formatting rewritable discs. When setting the option to Live File System, you cannot use it on LG players.

(Mastered/ Live File System : Disc format system for Windows Vista)

Table of Contents

1 Getting Started

2 Safety Information
6 Unique Features
6 Accessories
6 Introduction
6 – Playable Discs
6 – About the ⊘ Symbol Display
7 – Symbol Used in this Manual
7 – Regional Codes
7 Playable file Requirement
7 – MP3/WMA music file requirement
7 – Compatible USB Devices
8 – USB device requirement
8 – Photo file requirement
8 – DivX file requirement
9 Remote control
10 Front panel
12 Rear panel

2 Connecting

13 Connecting to speakers
13 – Attaching the speakers to the unit
13 Antenna Connection
14 Connections to Your TV
14 – Video Connection
15 – Component Video Connection
15 Optional Equipment Connection
15 – AUX In Connection
16 – USB Connection
16 Adjust the Setup settings
16 – OSD Initial language settings - Optional
17 – To display and exit the Setup Menu
17 – LANGUAGE
18 – DISPLAY
18 – AUDIO
19 – LOCK (Parental Control)
20 – OTHERS

3 Operating

21 Basic Operations
21 – Disc/USB Operations
22 Other Operations
22 – Displaying Disc Information on-screen
22 – To display the DVD Menu
22 – To display the DVD title
22 – Selecting a subtitle language
22 – 1.5 times speed playback
23 – Starting play from selected time
23 – Last Scene Memory
23 – Changing the character set to display DivX® subtitle correctly - optional
23 – Creating your own program
23 – Viewing a PHOTO file
24 – Viewing a PHOTO file as a slide show
24 – Setting the Clock
24 – Using your player as an alarm clock
25 – Sleep Timer Setting
25 – Dimmer
25 – DEMO
25 – Turning off the sound temporarily
25 – Screen Saver
25 – System Select - Optional
25 – Displaying file information (ID3 TAG)
26 – Using Microphone
26 – VOCAL FADER
27 Radio Operations
27 – Listening to the radio
27 – Presetting the Radio Stations
27 – Deleting all the saved stations
27 – Improving poor FM reception
28 Sound adjustment
28 – Setting the surround mode
28 – Setting the USER EQ
29 Advanced Operations
29 – Listening to music from your external device
29 – Recording to USB

4 Troubleshooting

30 Troubleshooting

5 Appendix

31 Specifications
33 Maintenance
33 – Handling the Unit
33 – Notes on Discs
33 Trademarks and Licenses
34 Language Codes
35 Area Codes

Unique Features

USB Direct Recording

Records music to your USB device.

Accessories

Please check and identify the supplied accessories.

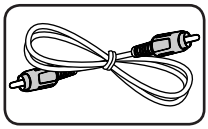

Video cable (1)

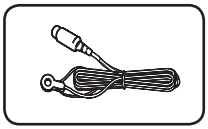

FM antenna (1)

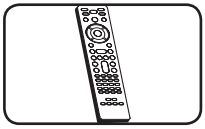

Remote control (1)

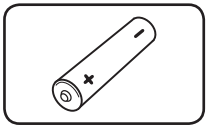

Battery (1)

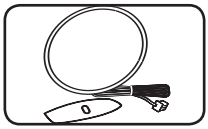

AM antenna (1)

Introduction

Playable Discs

This unit plays DVD±R/RW and CD-R/RW that contains audio titles, DivX, MP3, WMA and/or JPEG files. Some DVD±RW/DVD±R or CD-RW/CD-R cannot be played on this unit due to the recording quality or physical condition of the disc, or the characteristics of the recording device and authoring software.

DVD VIDEO	DVD-VIDEO (8 cm / 12 cm disc) Discs such as movies that can be purchased or rented.
DVD R	DVD±R (8 cm / 12 cm disc) Video mode and finalized only
DVD RW	DVD-RW (8 cm / 12 cm disc) Video mode and finalized only
RW DVD+R	DVD+R: Video mode only Supports the double layer disc also
RW DVD+ReWritable	DVD+RW (8 cm / 12 cm disc) Video mode and finalized only
COMPACT disc DIGITAL AUDIO	Audio CD: Music CDs or CD-R/CD-RW in music CD format that can be purchased.

About the ⊘ Symbol Display

"⊘" may appear on your TV display during operation and indicates that the function explained in this owner's manual is not available on that disc.

Symbol Used in this Manual

DVD and finalized DVD±R/RW	DVD
DivX files	MOVIE
MP3/WMA files, Audio CDs	MUSIC
JPG files	PHOTO

Regional Codes

This unit has a regional code printed on the rear of the unit. This unit can play only DVD discs labelled same as the rear of the unit or "ALL".

- Most DVD discs have a globe with one or more numbers in it clearly visible on the cover. This number must match your unit's regional code or the disc cannot play.
- If you try to play a DVD with a different regional code from your unit, the message "Check Regional Code" appears on the TV screen.

Note

Indicates special notes and operating features.

Caution

Indicates cautions for preventing possible damages from abuse.

Playable file Requirement

MP3/WMA music file requirement

MP3/ WMA file compatibility with this unit is limited as follows :

- Sampling Frequency : 32 - 48 kHz (MP3), 32 - 48 kHz (WMA)
- Bit rate : 32 - 320 kbps (MP3), 40 - 192 kbps (WMA)
- Maximum files : Under 999
- File extensions : ".mp3"/ ".wma"
- CD-ROM file format : ISO9660/ JOLIET
- We recommend that you use "Easy-CD Creator", which creates an ISO 9660 file system.

Compatible USB Devices

- MP3 Player : Flash type MP3 player.
- USB Flash Drive : Devices that support USB2.0 or USB1.1.
- The USB function of this unit does not support all USB devices.

USB device requirement

- Devices which require additional program installation when you have connected it to a computer, are not supported.
- Do not extract the USB device while in operation.
- For a large capacity USB, it may take longer than a few minute to be searched.
- To prevent data loss, back up all data.
- If you use a USB extension cable or USB hub, the USB device is not recognized.
- Using NTFS file system is not supported. (Only FAT(16/ 32) file system is supported.)
- This unit is not supported when the total number of files is 1 000 or more.
- External HDD, Card readers, Locked devices, or hard type USB devices are not supported.
- USB port of the unit cannot be connected to PC. The unit cannot be used as a storage device.

Photo file requirement

Photo file compatibility with this unit is limited as follows :

- Max pixel in width :
  Normal : 5120 x 3840
  Progressive JPEG : 2048 x 1536
- Maximum files : Under 999
- Some discs may not operate due to a different recording format or the condition of disc.
- File extensions : ".jpg"
- CD-ROM file format : ISO9660 LEVEL 1/ JOLIET

DivX file requirement

DivX file compatibility with this unit is limited as follows :

- Available resolution:
  up to 800 x 600 (W x H) pixels.
- The file name of the DivX subtitle should be entered 45 characters or less.
- If there is a code impossible to express in the DivX file, it may be displayed as a " _ " mark on the display.
- Frame rate : less than 30 fps.
- If the video and audio structure of recorded files are not interleaved, either video or audio is output.
- Playable DivX file : ".avi", ".mpg", ".mpeg", ".divx"
- Playable Subtitle format : SubRip (*.srt/ *.txt), SAMI (*.smi), SubStation Alpha (*.ssa/ *.txt), MicroDVD (*.sub/ *.txt), SubViewer 2.0 (*.sub/ *.txt), Vobsub (*.sub)
- Playable Codec format : "DIVX3.xx", "DIVX4.xx", "DIVX5.xx", "MP4V3", "3IVX".
- Playable Audio format : "AC3", "PCM", "MP3", "WMA".
- Sampling frequency : between 32 to 48 kHz (MP3), between 32 to 48 kHz (WMA)
- Bit rate : between 32 to 320 kbps (MP3), 40 to 192 kbps (WMA)
- For Discs formatted in Live file system, you can not use it on this unit.
- If the name of movie file is different from that of the subtitle file, during playback of a DivX file, subtitle may not be display.
- If you play a DivX file differ from DivX spec, it may not operate normally.

Remote control

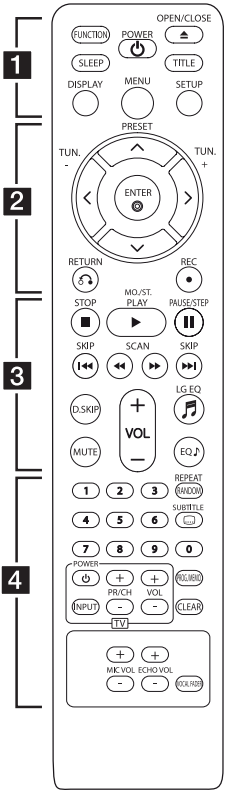

Battery Installation

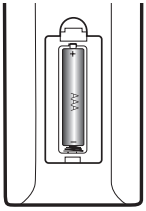

Remove the battery cover on the rear of the Remote Control, and insert one (size AAA) battery with ⊕ and ⊖ matched correctly.

• • • • • • **1** • • • • •

FUNCTION : Selects the function and input source.

SLEEP : Sets the system to turn off automatically at a specified time.

POWER (⏻) : Switches the unit ON or OFF.

OPEN/CLOSE (⏏) : Opens and closes the disc tray.

TITLE : If the current DVD title has a menu, the title menu appears on the screen. Otherwise, the disc menu may appear.

DISPLAY : Accesses On-Screen Display.

MENU : Accesses the menu on a DVD disc.

SETUP : Accesses or removes setup menu.

• • • • • • **2** • • • • •

PRESET (∧ / ∨) : Selects programme of Radio.

TUN. -/+(< / >) : Tunes in the desired radio station.

∧ / ∨ / < / > (up/ down/ left/ right) : Used to navigate on-screen displays.

ENTER (⦿) : Acknowledges menu selection.

RETURN (↶) : Moving back wards in the menu.

REC (●) : Recording.

• • • • • • **3** • • • • •

STOP (■) : Stops playback or recording.

PLAY (▶), **MO./ST.** : Starts playback.
Selects Mono/ Stereo.

PAUSE/STEP (❚❚) : Pauses playback.

SKIP (|◀◀ / ▶▶|) : Goes to next or previous chapter/ track/ file.

SCAN (◀◀ / ▶▶) : Searches backward or forward.

D.SKIP : Chooses a desired disc.

MUTE : Mutes the sound.

VOL (+/-) (Volume) : Volume control.

EQ (♪) : You can choose sound impressions.

LG EQ (♬) : Select a Natural or Local Specialization equalizer effect by LG EQ.

• • • • • • **4** • • • • •

0 to 9 numerical buttons : Selects numbered options in a menu.

REPEAT/RANDOM : Selects a play mode.

SUBTITLE (...) : During playback, press **SUBTITLE (...)** repeatedly to select a desired subtitle language.

TV Control buttons : Controls the TV. (LG TV only)

Controlling the TV.
You can control the sound level, input source, and power switching of LG TVs as well. Hold POWER (TV) and press PR/CH (+/–) button repeatedly until the TV turns on or off.

PROG./MEMO. : Accesses Program menu.

CLEAR : Removes a track number on the Program List.

MIC VOL (+/ -) : Adjusts microphone volume.

ECHO VOL (+/ -) : Adjusts echo volume.

VOCAL FADER : You can enjoy the function as karaoke, by reducing singer vocal of music in the various source.

Front panel

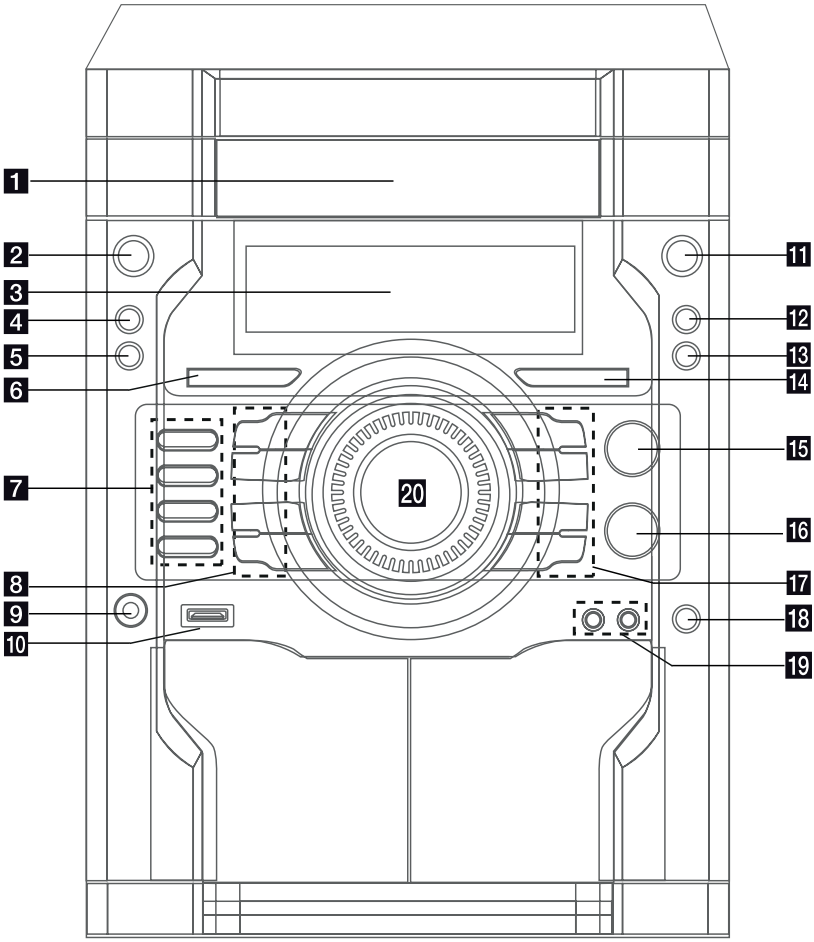

1 **Disc tray**

2 **⏻/❙ STANDBY/ON**

3 **Display window**

4 **CLOCK**
For setting the clock and checking the time.

5 **TIMER**
With the TIMER function you can turn USB, CD play and TUNER reception on or off at a desired time.

6 **USER EQ**

7 Selects **DVD/CD** function.
Selects **TUNER** function.
Selects **USB** function.
Selects **AUX** function.

8 **SET**
Confirms the settings. (TIMER/ CLOCK)
CD ❚❚
Pauses.
PRESET (-)
❙◀◀ ◀◀ TUNING (+)
USB Selects **USB** function.
DEMO In power off state to demonstrate the function on display window. To cancel it, press ⏻/❙ or this button again.

9 **Headphone jack**

10 **USB connector**

11 **⏏ OPEN/CLOSE**

12 **DISC SKIP**
Choose a desired disc.

13 **EQ**
You can choose fixed sound impression.

12 **XDSS**
Extreme Dynamic Sound System.
Reinforce the treble, bass and surround effect.
MP3 OPT.
Optimizes compressible MP3 files so that it improves the bass sound.

15 **REC.**

16 **LG EQ**
You can choose fixed sound impression.

17 **▶**
PRESET (+)
▶▶ ▶▶❙ TUNING(+)
STOP

18 **MIC VOL.**
Adjust microphone volume.

19 **MIC 1, 2**

20 **Volume control**

Rear panel

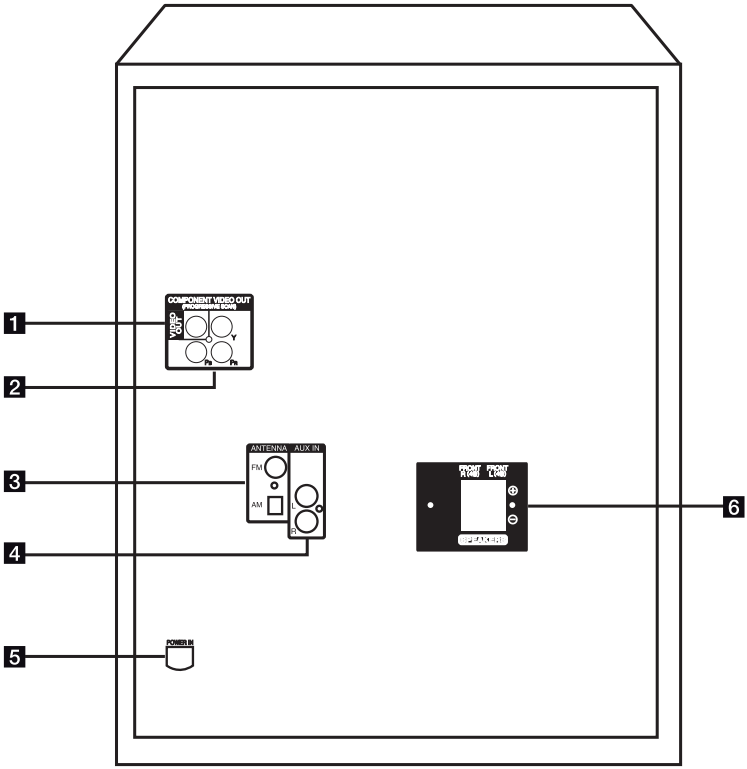

1 VIDEO OUT connector
2 COMPONENT VIDEO OUT (PROGRESSIVE SCAN) connector
3 ANTENNA (FM, AM)
4 AUX IN connector
5 POWER IN
6 SPEAKERS terminal

Connecting to speakers

Attaching the speakers to the unit

To connect the cable to the unit, press each plastic finger pad to open the connection terminals on the unit. Insert the wire and release the finger pad.

Connect the black end of each wire to the terminals marked - (minus) and the other end to the terminals marked + (plus).

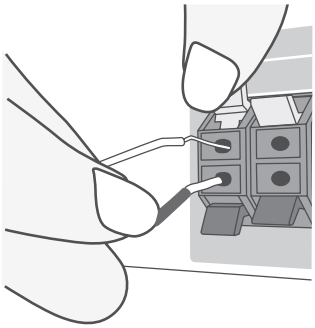

Caution

The speakers contain magnet parts, so color irregularity may occur on the TV screen or PC monitor screen. Please use the speakers far away from either TV screen or PC monitor.

Antenna Connection

Connect the supplied FM/ AM antenna for listening to the radio.

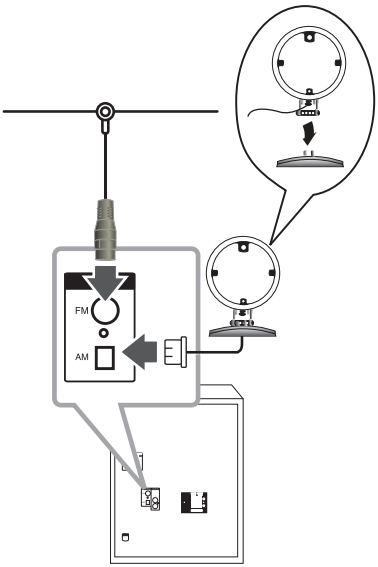

Note

- To prevent noise pickup, keep the AM Loop antenna away from the unit and other components.
- Be sure to fully extend the FM wire antenna. After connecting the FM wire antenna, keep it as horizontal as possible.

Connections to Your TV

Make one of the following connections, depending on the capabilities of your existing equipment.

Note

- Depending on your TV and other equipment you wish to connect, there are various ways you could connect the unit. Use only one of the connections described in this manual.
- Please refer to the manuals of your TV, Stereo System or other devices as necessary to make the best connections.
- Make sure the unit is connected directly to the TV. Tune the TV to the correct video input channel.
- Do not connect your unit via your VCR. The image could be distorted by the copy protection system.

Video Connection

Connect the VIDEO OUT jack on the unit to the video in jack on the TV using a video cable.

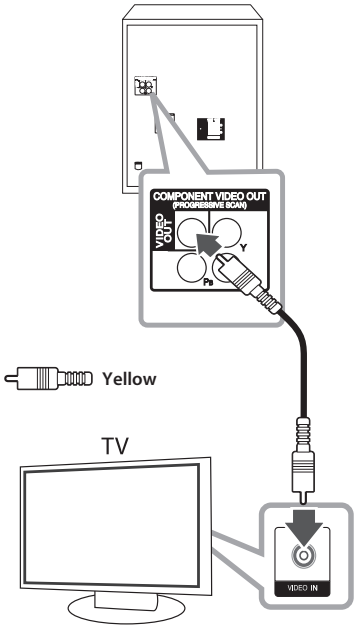

Component Video Connection

Connect the COMPONENT VIDEO OUT (PROGRESSIVE SCAN) jacks on the unit to the corresponding input jacks on the TV using component cables.
You can hear the sound through the system's speakers.

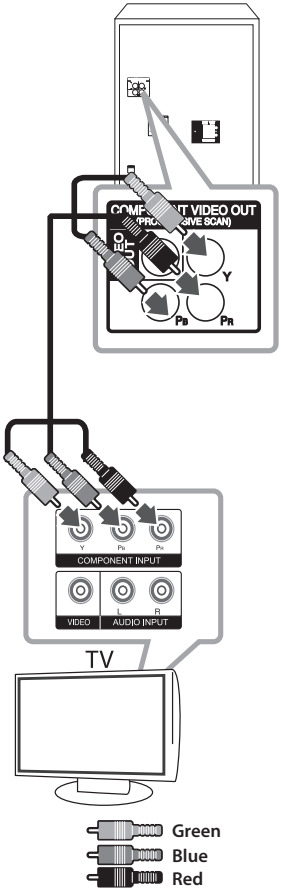

Note

If your TV accepts progressive format signals, you must use this connection and set [Progressive Scan] in [Display] setup to [On] (See page 18).

Optional Equipment Connection

AUX In Connection

Connect an Output of auxiliary device to the AUX (L/R) IN Connector.

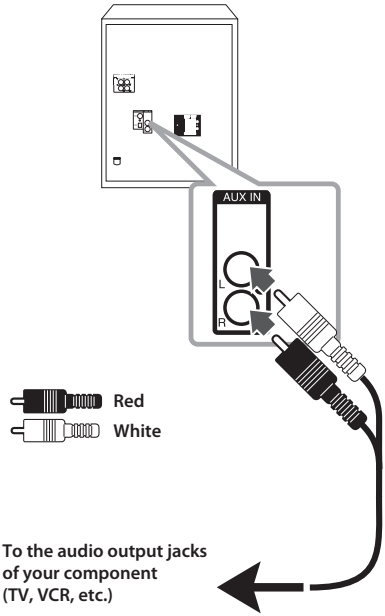

Note

If your TV has only one output for audio (mono), connect it to the left (white) audio jack on the unit.

USB Connection

Connect the USB port of USB Memory (or MP3 player, etc.) to the USB port on the front of the unit.

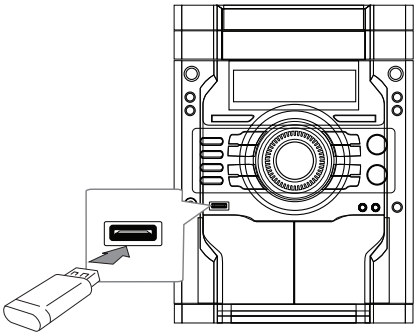

Note

Removing the USB Device from the unit

1. Choose a different function/mode or press **STOP** (■) twice in a row.
2. Remove the USB device from the unit.

Adjust the Setup settings

By using the Setup menu, you can make various adjustments to items such as picture and sound. You can also set a language for the subtitles and the Setup menu, among other things. For details on each Setup menu item.

OSD Initial language settings - Optional

When using this unit for the first time, the initial language setup menu appears on your TV screen. You must complete initial language selection before using the unit. English will be selected as the initial language.

1. Press **POWER (⏻)** to turn the unit on.
   The language setup menu will appear on the screen.
2. Use ∧ / ∨ / < / > to select a language then press **ENTER (⊙)**.
   The confirm menu will appear.
3. Use < / > to select [Enter] then press **ENTER (⊙)** to finish the language setup.

To display and exit the Setup Menu

1. Select the DVD/CD or USB function by pressing **FUNCTION**.
2. Press **SETUP**.
   Displays the [SETUP] Menu.
3. Press **SETUP** or **RETURN (↶)** to exit in the [SETUP] Menu.

About help menu for Setup

Menu	Buttons	Operation
▲/▼ **Move**	∧/∨	Moving to another menu.
◀ **Prev.**	<	Moving to previous level.
▶ **Select**	>	Moving to next level or selecting menu.
↶ **Close**	**RETURN**	To exit the [Setup] menu.
⊙ **Enter**	**ENTER**	To confirm menu.

LANGUAGE

Menu Language

Select a language for the Setup menu and then on screen display.

Disc Audio/Disc Subtitle/Disc Menu

Select the language you prefer for the audio track (disc audio), subtitles, and the disc menu.

[Original]

Refers to the original language in which the disc was recorded.

[Other]

To select another language, press numeric buttons and then **ENTER (⊙)**to enter the corresponding 4-digit number according to the language code list on the page 34. If you enter the wrong language code, press **CLEAR**.

[Off (for Disc Subtitle)]

Turn off Subtitle.

DISPLAY

TV Aspect

Select which screen aspect to use based on the shape of your TV screen.

[4:3]

Select when a standard 4:3 TV is connected.

[16:9]

Select when a 16:9 wide TV is connected.

Display Mode

The Display Mode setting works only when the TV Aspect mode is set to 4:3.

[Letterbox]

This displays a wide screen picture with black bands at the top and bottom of the screen.

[Panscan]

This fills the entire 4:3 screen, cropping the picture as necessary.

Progressive Scan (For Component Video connections)

Selects whether the COMPONENT VIDEO(PROGRESSIVE SCAN) OUT jacks output progressive signal. If your TV accepts progressive format signals, you will enjoy accurate color reproduction and high quality image by selecting [On]. If your TV does not accept progressive format signals, select [Off].

If you set Progressive Scan to [On] in error, you must reset the unit. First, remove the disc from the unit. Next, press and hold **STOP** (■) for about five seconds. The video output will be restored to the standard setting, and a picture will be visible on your TV.

AUDIO

DRC (Dynamic Range Control)

Make the sound clear when the volume is turned down (Dolby Digital only). Set to [On] for this effect.

Vocal

Select [On] to mix karaoke channels into normal stereo.
This function is effective for multi-channel karaoke DVDs only.

LOCK (Parental Control)

Initial Setting of the Area Code

When you use this unit for the first time, you have to set the Area Code as shown below.

1. Select the [Lock] menu and then press >.
2. Press >.
   To access the [Lock] options, you must input the password you have created. Input a password and press **ENTER (⊙)**. Enter it again and press **ENTER (⊙)** to verify. If you make a mistake before pressing **ENTER (⊙)**, press **CLEAR**.
3. Select the first character using ∧ / ∨ buttons.
4. Press > and select the second character using ∧ / ∨ buttons.
5. Press **ENTER (⊙)** to confirm your Area code selection.

Rating

Blocks playback of rated DVDs based on their contents. Not all discs are rated.

1. Select [Rating] on the [Lock] menu then press >.
2. Input a password and press **ENTER (⊙)**.
3. Select a rating from 1 to 8 using the ∧ / ∨ buttons.

[Rating 1-8]

Rating one (1) has the most restrictions and rating eight (8) is the least restrictive.

[Unlock]

If you select unlock, parental control is not active and the disc plays in full.

4. Press **ENTER (⊙)** to confirm your rating selection.

Password

You can enter or change password.

1. Select [Password] on the [Lock] menu and then press >.
2. Input a password and press **ENTER (⊙)**.
   To change the password, press **ENTER (⊙)** when the [Change] option is highlighted. Input a password and press **ENTER (⊙)**. Enter it again and press **ENTER (⊙)** to verify.
3. Press **SETUP** to exit the menu.

Note

If you forget your password, you can clear it using the following steps:

1. Press **SETUP** to display the Setup menu.
2. Input the 6-digit number "210499" and press **ENTER (⊙)**. The password is cleared.

Area Code

Enter the code of the area whose standards were used to rate the DVD video disc, based on the list on page 35.

1. Select [Area Code] on the [Lock] menu then press >.
2. Input a password and press **ENTER (⊙)**.
3. Select the first character using ∧ / ∨ buttons.
4. Press > and select the second character using ∧ / ∨ buttons.
5. Press **ENTER (⊙)** to confirm your Area code selection.

OTHERS

DivX(R) Registration

ABOUT DIVX VIDEO: DivX® is a digital video format created by DivX,Inc. This is an official DivX Certified device that plays DivX video. Visit www.divx.com for more information and software tools to convert your files into DivX video.

ABOUT DIVX VIDEO-ON-DEMAND: This DivX Certified® device must be registered in order to play DivX Video-on-Demand (VOD) content. To generate the registration code, locate the DivX VOD section in the device setup menu. Go to vod.divx.com with this code to complete the registration process and learn more about DivX VOD.

Note

All the downloaded videos from DivX® VOD can only be played back on this unit.

Semi Karaoke

When a chapter/ title/ track is fully finished, this function shows the score in the screen with a fanfare sound.

[On]

When you finished singing a score will appear on the screen.

[Off]

Fanfare and score do not appear on the screen.

Note

- DVD, DVD Karaoke discs with more than 2 tracks are available discs for this function.
- When you watch movies, "off " the Semi Karaoke at the [SETUP] menu or enjoy it without connecting the MIC if the fanfare or score appears during changing a chapter.
- This function operate on the DVD/CD mode.
- The Semi Karaoke function is available only when a microphone is connected.

Basic Operations

Disc/USB Operations

1. Insert the disc by opening the **Disc tray** or connect the USB device to the USB port.
2. Select the **DVD/CD** or **USB** function by pressing **FUNCTION**.
3. Select a file (or track/ title) you want to play by pressing ∧ / ∨ / < / >.

Note

- When playing a disc or USB Flash Drive containing with DivX, MP3/ WMA and JPEG files together, you can select menu of files which you would like to play by pressing **MENU**.
- For the most Audio CD and DVD-ROM discs, playback starts automatically.
- The unit plays only music file contained in the USB storage device or disc automatically. (except for folder)

To	Do this
Stop	Press ■.
Playback	Press ►.
Pause	During playback, press ❚❚.
Frame-by-Frame playback	Press ❚❚ repeatedly to play title Frame-by-Frame. (DVD, DivX only)
Skipping to the next/ previous chapter/ track/ file	During playback, press ❙◄◄ or ►►❙ to go to the next chapter track/file or to return to the beginning of the current chapter track/ file. Press ❙◄◄ twice briefly to step back to the previous chapter track/ file.
Locating a point quickly by playing a file in fast forward or fast reverse	During playback, press ◄◄ or ►► repeatedly to select the required scan speed. To return to normal speed, press ►.
Playing repeatedly or randomly	Press **REPEAT/RANDOM** repeatedly, and the current title, chapter or track will be played back repeatedly or randomly. - Random play mode : only music files.
Slowing down the playing speed	In the pause mode, press ◄◄ or ►► to select the required speed. (DVD only)

Other Operations

Displaying Disc Information on-screen

You can display various information about the disc loaded on-screen.

1. Press **DISPLAY** to show various playback information.
   The displayed items differ depending on the disc type or playing status.
2. You can select an item by pressing ∧ / ∨ and change or select the setting by pressing < / >.

Title	-	Current title number/ total number of titles.
Chapter	-	Current chapter number/total number of chapters.
Time	-	Elapsed playing time.
Audio	-	Selected audio language or channel.
Subtitle	-	Selected subtitle.
Angle	-	Selected angle/ total number of angles.
Sound	-	Selected sound mode

Note

If any button is not pressed for a few seconds, the onscreen display disappears.

To display the DVD Menu

DVD

When you play a DVD which contains several menu, you can select the menu you want using the Menu.

1. Press **MENU**.
   The disc's menu appears.
2. Select the menu by using ∧ / ∨ / < / >.
3. Press **ENTER (⊙)** to confirm.

To display the DVD title

DVD

When you play a DVD which contains several title, you can select the title you want using the Menu.

1. Press **TITLE**.
   The disc's title appears.
2. Select the menu by pressing ∧ / ∨ / < / >.
3. Press **ENTER (⊙)** to confirm.

Selecting a subtitle language

MOVIE DVD

During playback, press **SUBTITLE (💬)** repeatedly to select a desired subtitle language.

1.5 times speed playback

DVD

The 1.5 speed allows you to watch the pictures and listen to the sound quicker than playing at a normal speed.

1. During playback, press **PLAY (▶)** to play at 1.5 times speed. "▶X1.5" appears on the screen.
2. Press **PLAY (▶)** again to exit.

Starting play from selected time

MOVIE DVD

To start playing at any chosen time on the file or title.

1. Press **DISPLAY** during playback.
2. Press ∧ / ∨ to select the time clock icon and "--:--:--" appears.
3. Input the required start time in hours, minutes, and seconds from left to right. If you enter the wrong numbers, press **CLEAR** to remove the numbers you entered. Then input the correct numbers.
   For example, to find a scene at 1 hour, 10 minutes, and 20 seconds, enter "11020" by using numerical buttons.
4. Press **ENTER (⦿)** to confirm. Playback starts from the selected time.

Last Scene Memory

DVD

This unit memorizes last scene from the last disc that is viewed. The last scene remains in memory even if you remove the disc from the unit or switch off the unit. If you load a disc that has the scene memorized, the scene is automatically recalled.

Changing the character set to display DivX® subtitle correctly - optional

MOVIE

If the subtitle does not display properly during playback press and hold **SUBTITLE (💬)** for about 3 seconds then press **SUBTITLE (💬)** to select another language code until the subtitle is displayed properly and then press **ENTER (⦿)**.

Creating your own program

MUSIC

You can play the contents of a disc in the order you want by arranging the order of the songs on the disc. The program is cleared when the disc is removed.

1. Select a desired music file then press **PROG./MEMO.** or select "♫➔" and then press **ENTER (⦿)** to add the music file to the program list.
2. To add all music file on the disc, select "♫♫➔" and then press **ENTER (⦿)**.
3. Select a music file from the program list then press **ENTER (⦿)** to start programmed playback.
4. To clear a music file from the program list, select the music you want to clear then press **CLEAR** or select "♫🗑" icon and then press **ENTER (⦿)**. To clear all music file from the program list, select "♫♫🗑" then press **ENTER (⦿)**.

Viewing a PHOTO file

PHOTO

This unit can play discs with photo files.

1. Select the DVD/CD or USB function by pressing **FUNCTION**.
2. Press ∧ / ∨ to select a folder, and then press **ENTER (⦿)**.
   A list of files in the folder appears.
   If you are in a file list and want to return to the previous folder list, use the ∧ / ∨ buttons on the remote to highlight ↩... and press **ENTER (⦿)**.
3. If you want to view a particular file, press ∧ / ∨ to highlight a file and press **ENTER (⦿)** or **PLAY (▶)**. While viewing a file, you can press **STOP (■)** to move to the previous menu (JPEG menu)

Viewing a PHOTO file as a slide show

PHOTO

1. Highlight the file (not folder) which you like beginning slide show.
2. Use ∧ / ∨ / < / > to highlight the Speed. Then, use < / > to select the (3s/ 5s/ 8s) option you want to use and then press **ENTER (⊙)**.
3. Use ∧ / ∨ / < / > to highlight the (Slide Show) then press **ENTER (⊙)**.

About help menu for slide show.

Menu	Buttons	Operation
▲ / ▼ ↺90° / ↻90°	∧ / ∨	Rotating the picture.
◄ / ► Prev./ Next	< / >	Moving to another file.
Close	RETURN	Returning to the menu.
⊙ Hide	ENTER	Hiding the help menu.

Setting the Clock

1. Turn the power on.
2. Press **CLOCK** for at least 2 seconds.
3. Choose from either, by using ⏮ or ⏭.
   - AM 12:00 (for an AM and PM display) or 0:00 (for a 24 hour display)
4. Press **SET/CD ⏸** for confirm your selection.
5. Select the hours. by using ⏮ or ⏭.
6. Press **SET/CD ⏸**.
7. Select the minutes, by using ⏮ or ⏭.
8. Press **SET/CD ⏸**.

Using your player as an alarm clock

1. Turn the power on.
2. Press **TIMER**. Each functions flashes.
3. Press **SET/CD ⏸** when the function you want to be woken by is showing.
4. "ON TIME" will be displayed. This is where you set the time you want the alarm to start. Use the ⏮ or ⏭ to change the hours and minutes and **SET/CD ⏸** to save.
5. The "OFF TIME" will be displayed. This is where you set the time you want the function to stop.
6. Use the ⏮ or ⏭ to change the hours and minutes and press **SET/CD ⏸** to save.
7. You will be shown the volume (VOL) you want to be woken by. Use the ⏮ or ⏭ to change the volume and **SET/CD ⏸** to save. The clock icon "◷" shows that the alarm is set.
8. Press **TIMER** button 2 times. You can check the setting status.

Note

- If you set the clock time, you can check the time by pressing **CLOCK** even when the player is turned off.
- If you set the clock time and alarm, you can check the alarm icon "◷" by pressing **CLOCK** even when the player is turned off.
- If you set the clock time and alarm, you can check the alarm icon "◷" and setting information by pressing **TIMER** even when the unit is turned off. Then this function will working in everyday.

Sleep Timer Setting

Press **SLEEP** one or more times to select delay time between 10 and 180 minutes, after which the unit turn off.

To cancel the sleep function, press **SLEEP** repeatedly until "SLEEP 10" appears, and then press **SLEEP** once again while "SLEEP 10" is displayed.

Note

- You can check the remaining time before the Unit turns off.
- Press **SLEEP**. The remaining time appears in the display window.
- Sleep function will working after dimmer.

Dimmer

Press **SLEEP** once. The display window will be darkening by half. To cancel it, press **SLEEP** repeatedly until dim off.

DEMO

Press **DEMO** once. In power off state to demonstrate the function on display window.

Turning off the sound temporarily

Press **MUTE** to mute your unit.

You can mute your unit in order, for example, to answer the telephone, appears the "🔇" in the display window.

Screen Saver

The screen saver appears when you leave the unit in Stop mode for about five minutes.

System Select - Optional

You must select the appropriate system mode for your TV system. If "NO DISC" appears in the display window, press and hold **PAUSE/STEP (II)** for more than five seconds to be able to select a system. (AUTO/PAL/NTSC)

Displaying file information (ID3 TAG)

While playing an MP3 file containing file information, you can display the information by pressing **DISPLAY**.

Using Microphone

1. Connect your microphone to the **MIC 1, 2**.
2. Play the music you want.
3. Sing along with the accompaniment. Adjust the microphone volume by pressing **MIC VOL.**.

Note

- When not using the microphone, set the **MIC VOL.** to minimum or turn off the **MIC** and remove the microphone from the **MIC 1, 2**.
- If the microphone is set too near the speaker, a howling sound may be produced. In this case, move the microphone away from the speaker or decrease the sound level by using the **MIC VOL.**.
- If sound through the micrphone is extremely loud, it may be distorted. In this case, rotate **MIC VOL.** to minimum.

VOCAL FADER

You can enjoy the function as karaoke, by reducing singer vocal of music in the various source. (MP3/ WMA/ CD/ etc.)
Press the **VOCAL FADER**, and "FADE ON" will appear in display window.
To cancel it, press **VOCAL FADER** again.
The quality of the VOCAL FADER may be different depending on the recording conditions of music files.

Note

- This function is available to use only when a microphone is connected.
- It is not available on the MONO source.

Radio Operations

Be sure that both FM and AM aerials are connected. (Refer to the page 13)

Listening to the radio

1. Press **FUNCTION** on the remote control or **TUNER** on the unit until FM or AM appears in the display window. The last received station is tuned in.
2. Press and hold **TUNING (-/+)** on the unit or **TUN.(-/+)** on the remote control for about two seconds until the frequency indication starts to change, then release. Scanning stops when the unit tunes in a station.

   Or

   Press **TUNING (-/+)** on the unit or **TUN.(-/+)** on the remote control repeatedly.
3. Adjust the volume by rotating Volume knob on the front panel or by pressing **VOL (-/+)** on the remote control repeatedly.

Presetting the Radio Stations

You can preset 50 stations for FM and AM.
Before tuning, make sure that you have turned down the volume.

1. Press **FUNCTION** on the remote control or **TUNER** on the unit until FM or AM appears in the display window.
2. Select the desired frequency by using **TUNING (-/+)** on the unit or pressing **TUN.(-/+)** on the remote control.
3. Press **PROG./MEMO**. preset number will flash in the display window.
4. Press **PRESET (∧/∨)** to select the preset number you want.
5. Press **PROG./MEMO.**
   The station is stored.
6. Repeat the steps 2 to 5 to store other stations.
7. To listen a preset station, press **PRESET (∧/∨)**.

Deleting all the saved stations

1. Press and hold **PROG./MEMO.** for two seconds. "ERASE ALL" will flash up on the unit display.
2. Press **PROG./MEMO.** to erase all saved radio stations.

Improving poor FM reception

Press **PLAY (▶)**, **MO./ST.** on the remote control. This will change the tuner from stereo to mono and usually improve the reception.

Sound adjustment

Setting the surround mode

This system has a number of pre-set surround sound fields. You can select a desired sound mode by using **LG EQ/EQ**

You can change the **LG EQ/EQ** using **<** / **>** arrow key while the sound effect information is displayed on.

The displayed items for the equalizer maybe different depending on sound sources and effects.

On Display	Description
NATURAL	You can enjoy comfortable and natural sound.
Local Specialization equalizer	Regionally optimized sound effect. (DANGDUT/ ARABIC/ PERSIAN/ INDIA/REGUETON/ MERENGUE/ SAMBA/ SALSA)
AUTO EQ	Sets the sound equalizer on the mode that is the most similar to the genre which is included in the MP3 ID3 tag of song files.
POP CLASSIC JAZZ ROCK	This program lends an enthusiastic atmosphere to the sound, giving you the feeling you are at an actual rock pop, jazz or classic concert.
MP3 - OPT	This function is optimized for compressible MP3 file. It improves the treble sound.
XDSS ON	Reinforce the treble, bass and surround sound effect.
SUPER XDSS	Maximize the treble, bass and surround sound effect.
VIRTUAL	You can enjoy more virtual surround sound.
NORMAL	You can enjoy the sound without equalizer effect.

Note

- You may need to reset the surround mode, after switching the input, sometimes even after the sound track changed.
- You can not choose the VIRTUAL option, when the MIC is connected to the unit.

Setting the USER EQ

You can listen to music with the desired sound effect by adjusting the BASS, MIDDLE and TREBLE.

1. Press **USER EQ**.
   "USER EQ" is displayed.
2. Press **SET/CD ❚❚** to enter the **USER EQ**.
3. Select the BASS, MIDDLE or TREBLE sound effect you want by using **PRESET (-/+)** on the unit.
4. Press **TUNING (-/+)** on the unit to select the sound level you want.
5. To finish the setting, press **SET/CD ❚❚**.

Advanced Operations

Listening to music from your external device

The unit can be used to play the music from many types of external device. (Refer to the page 15)

1. Connect the external device to the AUX IN connector of the unit.
2. Turn the power on by pressing ⏻ **(Power)**.
3. Select the AUX function by pressing **AUX** on the unit or **FUNCTION** on the remote control.
4. Turn the external device and start it playing.

Recording to USB

You can record a various sound source to USB.

1. Connect the USB device to the unit.
2. Select a function in which you want to record Playback a sound source first.
3. Press **REC** on the unit or ●**REC** on the remote control.

   One track/ file recording - You can record to USB after playing the file you want.
   All tracks/ files recording - Record to USB in stop.
   Program list recording - After marking desired file(s) and you can record it to USB. (AUDIO CD Only)
4. To stop recording, press **STOP** on the unit or ■ on the remote control.

Note

- You can check the recording percentage rate for the USB record on the display window during the recording. (MP3/ WMA CD Only)
- During recording MP3/ WMA, there is no sound.
- When you stop recording during playback, the file that has been recorded at that time will be stored. (AUDIO CD Only)
- Do not remove the USB device or turn off the unit during USB recording. If not, an incomplete file may be made and not deleted on PC.
- If USB recording does not work, the message like "NO USB", "ERROR", "USB FULL" or "NO REC" is displayed on the display window.
- Multi card reader device or External HDD can not be used for USB recording.
- A file is recorded by 2 hours (about 128 Mbytes) when you record for a long term.
- In the state CD-G disc, USB record is not operated.
- You may not record more than 999 files.
- The file number is saved automatically.
- It'll be stored as follows.

AUDIO CD	MP3/ WMA	The other source*
CD_REC TRK_001 TRK_002 ⋮	FILE_REC 001_ ABC(File name) 002_ DEF(File name) ⋮	EXT_REC AUD_001 AUD_002 ⋮

* : TUNER, AUX and the like.

The making of unauthorized copies of copy-protected material, including computer programs, files, broadcasts and sound recordings, may be an infringement of copyrights and constitute a criminal offense. This equipment should not be used for such purposes.

Be responsible
Respect copyrights

Troubleshooting

Problem	Cause & Correction
No Power.	• The power cord is not plugged in. Plug in the power cord.
No picture.	• The TV is not set to receive the DVD signal. Select the appropriate video input mode on the TV so the picture from the unit appears on the TV screen. • The video cables are not connected securely. Connect the video cables securely to both the TV and unit.
There is little or no sound.	• Equipment connected via the audio cable is not set to receive DVD signal output. Select the correct input mode of the unit so you can hear the sound from the unit. • The speaker cables are not connected to the speakers or unit securely. Connect the speaker cables into the connection terminals correctly. • The volume is set to minimum. Use the volume controller to adjust the volume.
A DVD/CD will not play.	• An unplayable disc is inserted. Insert a playable disc.(check the disc type, colour system and regional code) • No disc is inserted. Insert a disc. • The disc is inserted upside down. Place the disc with the label or printed side facing upwards. • There is a parental lock which prevents the playback of DVDs with a certain rating. Enter your password or change the rating level.
Humming noise heard while a DVD or CD is playing.	• The disc is dirty. Clean the disc using a soft cloth with outward strokes. • The unit is located too close to the TV, causing feedback. Move unit and audio components further away from your TV.
Radio stations cannot be tuned in properly.	• The antenna is positioned poorly. Adjust its position. • The signal strength of the radio station is too weak. Tune to the station manually. • No stations have been preset or preset stations have been cleared (when tuning by scanning preset channels). Preset some radio stations, see page 27 for details.
The remote control does not work properly.	• The remote control is not pointed at the remote sensor of the unit. Point the remote control at the remote sensor of the unit. • The remote control is too far from the unit. Operate the remote control within about 23 ft (7 m). • There is an obstacle in the path of the remote control and the unit. Remove the obstacle. • The battery in the remote control is exhausted. Replace the battery with new one.

Specifications

General	
Power supply	Refer to main label.
Power consumption	Refer to main label.
Net Weight	5 kg
External dimensions (W x H x D)	370 x 335 x 275 mm
Operating conditions Temperature	5 °C to 35 °C (41 °F to 95 °F) Operation status: Horizontal
Operating humidity	5 % to 85 %

Inputs/ Outputs	
VIDEO OUT	1.0 V (p-p), 75 Ω, sync negative, RCA jack x 1
COMPONENT VIDEO OUT	(Y) 1.0 V (p-p), 75 Ω, sync negative, RCA jack x 1, (Pb)/(Pr) 0.7 V (p-p), 75 Ω, RCA jack x 2
AUX. IN	2.0 V (RCA jack x 2)

System	
Signal system	Standard NTSC color TV system
Frequency response	40 Hz to 20 kHz
Signal-to-noise ratio	More than 75 dB
Dynamic range	More than 80 dB
Bus Power Supply (USB)	DC 5 V ⎓ 500 mA

Amplifier		
	MBD 66	MBD106
Stereo mode	30 W + 30 W (4 Ω)	50 W + 50 W (4 Ω)

Tuner	
FM Tuning Range	87.5 to 108.0 MHz or 87.50 to 108.00 MHz
AM Tuning Range	522 to 1 620 kHz or 520 to 1 710 kHz

Front Speakers		
	MDS64V	MDS104V
Type	2 Way 2 Speaker	2 Way 2 Speaker
Impedance	4 Ω	4 Ω
Rated Input Power	30 W	50 W
Max. Input Power	60 W	100 W
Net Dimensions (WxHxD)	219 x 331 x 330 mm	219 x 331 x 330 mm
Net Weight (1EA)	3.6 kg	3.8 kg

- Design and specifications are subject to change without notice.

Maintenance

Handling the Unit

When shipping the unit

Please save the original shipping carton and packing materials. If you need to ship the unit, for maximum protection, re-pack the unit as it was originally packed at the factory.

Keeping the exterior surfaces clean

Do not use volatile liquids such as insecticide spray near the unit.

Wiping with strong pressure may damage the surface.

Do not leave rubber or plastic products in contact with the unit for a long period of time.

Cleaning the unit

To clean the player, use a soft, dry cloth. If the surfaces are extremely dirty, use a soft cloth lightly moistened with a mild detergent solution. Do not use strong solvents such as alcohol, benzine, or thinner, as these might damage the surface of the unit.

Maintaining the Unit

The unit is a high-tech, precision device. If the optical pick-up lens and disc drive parts are dirty or worn, the picture quality could be diminished. For details, please contact your nearest authorized service center.

Notes on Discs

Handling Discs

Never stick paper or tape on the disc.

Storing Discs

After playing, store the disc in its case. Do not expose the disc to direct sunlight or sources of heat and never leave it in a parked car exposed to direct sunlight.

Cleaning Discs

Do not use strong solvents such as alcohol, benzine, thinner, commercially available cleaners, or anti-static spray intended for older vinyl records.

Trademarks and Licenses

Dolby and the double-D symbol are registered trademarks of Dolby Laboratories.

"DVD Logo" is a trademark of DVD Format/Logo Licensing Corporation.

DivX®, DivX Certified® and associated logos are trademarks of DivX, Inc. and are used under license."

Language Codes

Use this list to input your desired language for the following initial settings: Disc Audio, Disc Subtitle, Disc Menu.

Language	Code	Language	Code	Language	Code	Language	Code
Afar	6565	French	7082	Lithuanian	7684	Sindhi	8368
Afrikaans	6570	Frisian	7089	Macedonian	7775	Singhalese	8373
Albanian	8381	Galician	7176	Malagasy	7771	Slovak	8375
Amharic	6577	Georgian	7565	Malay	7783	Slovenian	8376
Arabic	6582	German	6869	Malayalam	7776	Spanish	6983
Armenian	7289	Greek	6976	Maori	7773	Sudanese	8385
Assamese	6583	Greenlandic	7576	Marathi	7782	Swahili	8387
Aymara	6588	Guarani	7178	Moldavian	7779	Swedish	8386
Azerbaijani	6590	Gujarati	7185	Mongolian	7778	Tagalog	8476
Bashkir	6665	Hausa	7265	Nauru	7865	Tajik	8471
Basque	6985	Hebrew	7387	Nepali	7869	Tamil	8465
Bengali; Bangla	6678	Hindi	7273	Norwegian	7879	Telugu	8469
Bhutani	6890	Hungarian	7285	Oriya	7982	Thai	8472
Bihari	6672	Icelandic	7383	Panjabi	8065	Tonga	8479
Breton	6682	Indonesian	7378	Pashto, Pushto	8083	Turkish	8482
Bulgarian	6671	Interlingua	7365	Persian	7065	Turkmen	8475
Burmese	7789	Irish	7165	Polish	8076	Twi	8487
Byelorussian	6669	Italian	7384	Portuguese	8084	Ukrainian	8575
Chinese	9072	Japanese	7465	Quechua	8185	Urdu	8582
Croatian	7282	Kannada	7578	Rhaeto-Romance	8277	Uzbek	8590
Czech	6783	Kashmiri	7583	Rumanian	8279	Vietnamese	8673
Danish	6865	Kazakh	7575	Russian	8285	Volapük	8679
Dutch	7876	Kirghiz	7589	Samoan	8377	Welsh	6789
English	6978	Korean	7579	Sanskrit	8365	Wolof	8779
Esperanto	6979	Kurdish	7585	Scots Gaelic	7168	Xhosa	8872
Estonian	6984	Laotian	7679	Serbian	8382	Yiddish	7473
Faroese	7079	Latin	7665	Serbo-Croatian	8372	Yoruba	8979
Fiji	7074	Latvian, Lettish	7686	Shona	8378	Zulu	9085
Finnish	7073	Lingala	7678				

Area Codes

Choose an area code from this list.

Area	Code	Area	Code	Area	Code	Area	Code
Afghanistan	AF	Fiji	FJ	Monaco	MC	Singapore	SG
Argentina	AR	Finland	FI	Mongolia	MN	Slovak Republic	SK
Australia	AU	France	FR	Morocco	MA	Slovenia	SI
Austria	AT	Germany	DE	Nepal	NP	South Africa	ZA
Belgium	BE	Great Britain	GB	Netherlands	NL	South Korea	KR
Bhutan	BT	Greece	GR	Antilles	AN	Spain	ES
Bolivia	BO	Greenland	GL	New Zealand	NZ	Sri Lanka	LK
Brazil	BR	Hong Kong	HK	Nigeria	NG	Sweden	SE
Cambodia	KH	Hungary	HU	Norway	NO	Switzerland	CH
Canada	CA	India	IN	Oman	OM	Taiwan	TW
Chile	CL	Indonesia	ID	Pakistan	PK	Thailand	TH
China	CN	Israel	IL	Panama	PA	Turkey	TR
Colombia	CO	Italy	IT	Paraguay	PY	Uganda	UG
Congo	CG	Jamaica	JM	Philippines	PH	Ukraine	UA
Costa Rica	CR	Japan	JP	Poland	PL	United States	US
Croatia	HR	Kenya	KE	Portugal	PT	Uruguay	UY
Czech Republic	CZ	Kuwait	KW	Romania	RO	Uzbekistan	UZ
Denmark	DK	Libya	LY	Russian Federation	RU	Vietnam	VN
Ecuador	EC	Luxembourg	LU	Saudi Arabia	SA	Zimbabwe	ZW
Egypt	EG	Malaysia	MY	Senegal	SN		
El Salvador	SV	Maldives	MV				
Ethiopia	ET	Mexico	MX				

LG
Life's Good