LG
Life's Good

ENGLISH

OWNER'S MANUAL

LED LCD MONITOR

Please read this manual carefully before operating your set and retain it for future reference.

LED LCD MONITOR MODELS

E1951S	E1951T	E1951C	E2251VR	E2251VQ
E2051S	E2051T	E2051C	E2351VR	E2351VQ
E2251S	E2251T	E2251C		
	E2351T			
	E2351TC			

www.lg.com

ENGLISH

CONTENTS

3 ASSEMBLING AND PREPARING

3 Unpacking
4 Parts and buttons
6 Setting up the Monitor
6 - Assembling the Stand Body and Base
7 - Mounting on a table
8 - Detaching the Stand Base and the Stand Body
9 - Mounting on a wall

11 USING THE MONITOR

11 Connecting to a PC
11 - D-SUB connection
12 - DVI-D connection
13 - HDMI connection

14 CUSTOMIZING SETTINGS

14 Accessing The Main Menus
15 Customizing Settings
15 - MENU Settings
16 - SUPER ENERGY SAVING Settings
17 - SUPER+ RESOLUTION Settings
17 - VOLUME Settings (Only supported in HDMI)
18 - DUAL MONITOR Settings
18 - DUAL WEB Settings

19 TROUBLESHOOTING

21 SPECIFICATIONS

26 Preset Modes (Resolution)
27 - HDMI Video Timing
27 Indicator

28 PROPER POSTURE

28 Proper posture for using the Monitor.

29 LICENSES

ASSEMBLING AND PREPARING

Unpacking

Check your product box for the following items. If there are any missing accessories, contact the local dealer where you purchased your product. The illustrations in this manual may differ from the actual product and accessories.

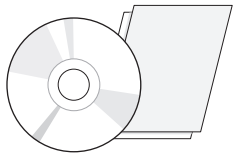

CD(Owner's Manual) / Card

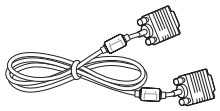

D-SUB Cable
(This signal cable may be attached to this product before shipping out.)

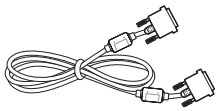

DVI-D Cable
(In some countries, this accessory may not be provided.)

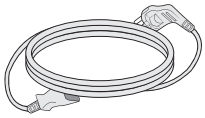

Power Cord

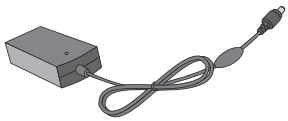

AC-DC Adapter

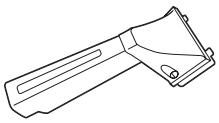

Stand Body

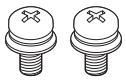

Screws for Assembly
2 EA

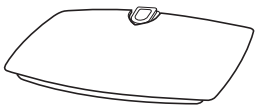

Stand Base

CAUTION

- Do not use any unapproved accessories to ensure the safety and product life span.
- Any damages or injuries by using unapproved accessories are not covered by the warranty.

NOTE

- The accessories supplied with your product may vary depending on the model.
- Product specifications or contents in this manual may be changed without prior notice due to upgrade of product functions.
- User should use shielded signal interface cables (RGB cable/ DVI-D cable) with ferrite cores to maintain standard compliance for the product.

ENGLISH

Parts and buttons

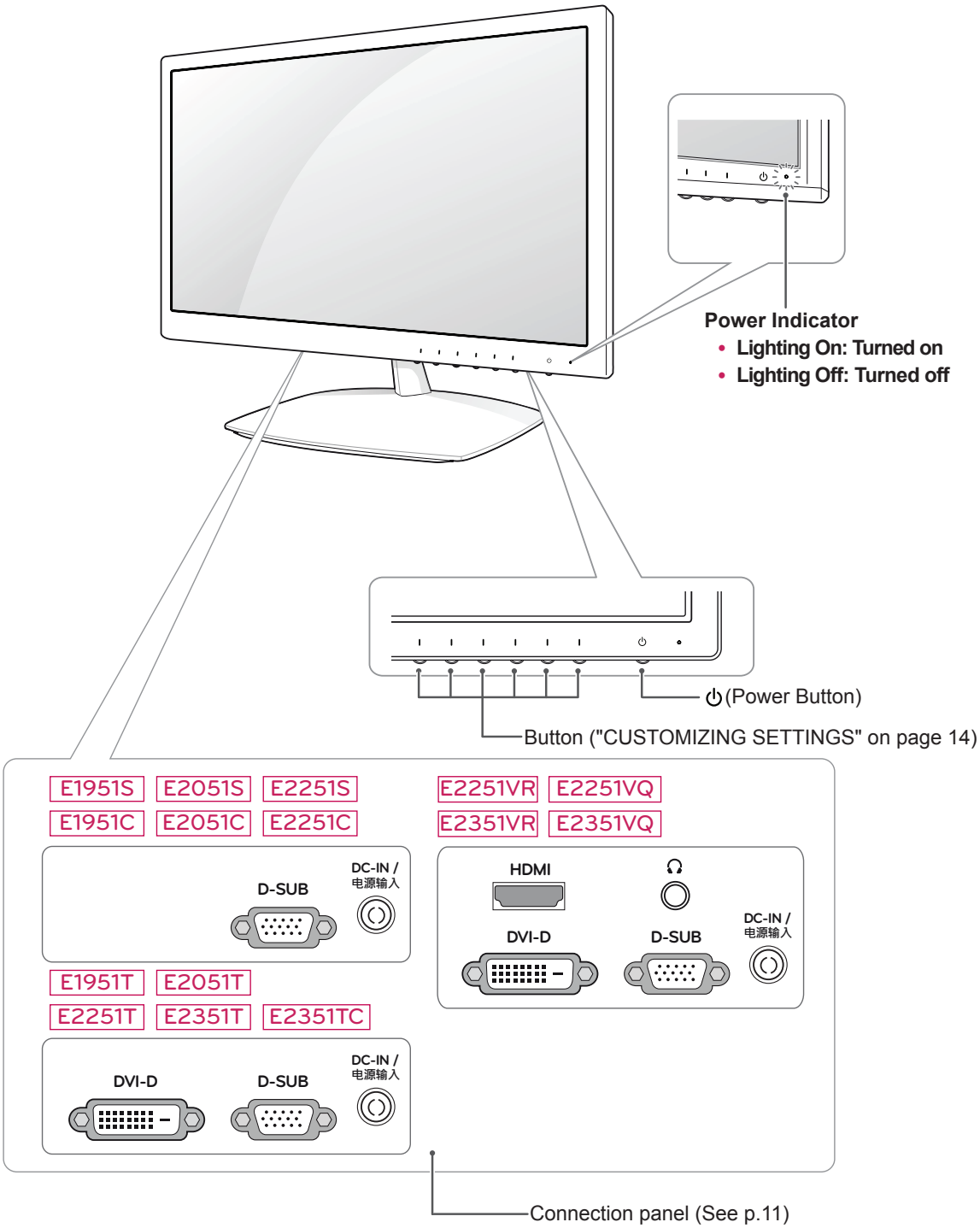

Button	Description	
MENU	Accesses the main menus.(See p.15)	
Left First Button	**OSD LOCKED/ UNLOCKED**	This function allows you to lock the current control settings, so that they cannot be inadvertently changed. Press and hold the Left First Button for several seconds. The message "OSD LOCKED" should appear. You can unlock the OSD controls at any time by pushing the Left First Button for several seconds. The message "OSD UNLOCKED" should appear.
SUPER+ RESOLUTION	Use this button to enter the **SUPER+ RESOLUTION** menu. For more information.(See p.17)	
DUAL	Use this button to enter the **DUAL** menu. For more information.(See p.18)	
AUTO	Press the **AUTO** button on the **MONITOR SETUP OSD** menu to automatically adjust the screen. (Only supported in Analog Mode)	
	The best display mode	
	E1951S/ E1951T/ E1951C	1366 x 768
	E2051S/ E2051T/ E2051C	1600 x 900
	E2251S/ E2251T/ E2251C/ E2251VR/ E2251VQ/ E2351TC E2351T/ E2351VR E2351VQ	1920 x 1080
VOLUME (Only HDMI mode)	**E2251VR/ E2351VR/ E2251VQ/ E2351VQ**	
	Adjust the volume of the Monitor.(See p.17)	
INPUT	You can choose the input signal. • When two input signals are at least are connected, you can select the input signal (D-SUB/ DVI-D/ HDMI) you want. • When only one signal is connected, it is automatically detected. The default setting is D-SUB.	
EXIT	Exit the OSD(On Screen Display).	
⏻ (Power Button)	Turns the power on or off.	
	Power Indicator	The power indicator stays blue if the display is running properly (On Mode). If the display is in Sleep Mode, the power indicator blinks blue.

ENGLISH

Setting up the Monitor

Assembling the Stand Body and Base

1 Place the Monitor with the screen side down on a flat and cushioned surface.

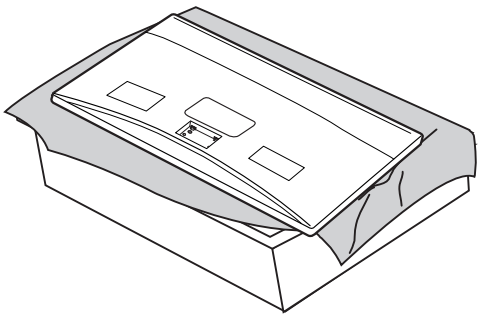

2 Attach the **Stand Body** from the Monitor.
Insert the two **Lockers** of the **Stand Body** right into the groove of the Monitor head and secure them by pressing the left and right bottom sides.

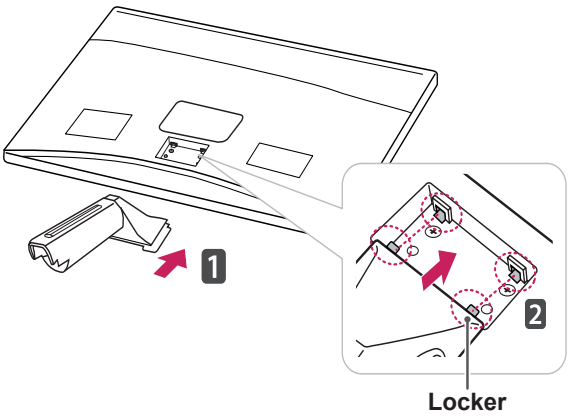

3 Secure the **Stand Body** the monitor using 2 screws.

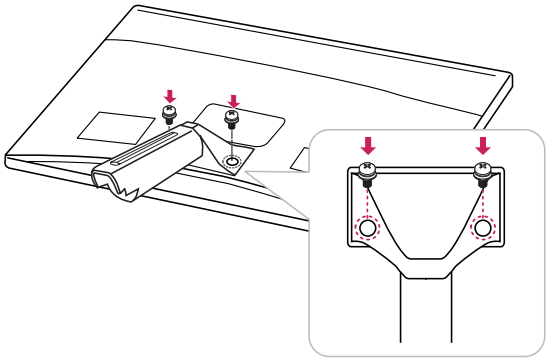

WARNING

- If you do not fasten the screws, the monitor may fall, which may result in damage to the product.

4 Check the direction of the **Stand Base** and assemble it with the **Stand Body**. Using a **coin**, turn the **screw** clockwise to secure the **Stand Base**.

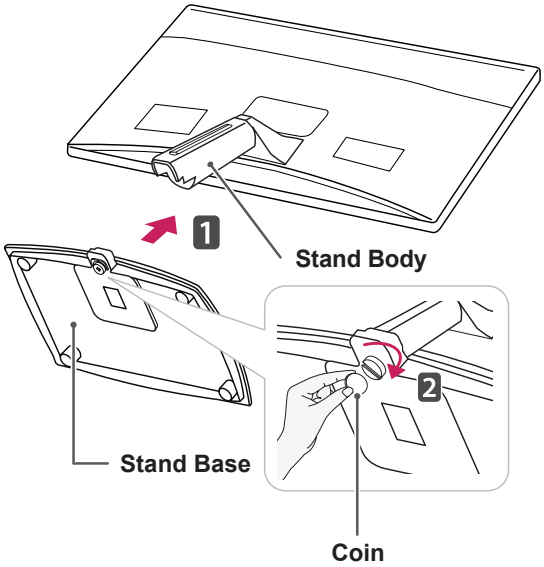

CAUTION

- This illustration depicts the general type of connection. Your monitor may differ from the items shown in the picture.
- Do not carry the product upside down holding only the stand base. The product may fall and get damaged or injure your foot.
- Applying excessive force when fastening screws may cause damage to the monitor. Damage caused in this way will not be covered by the product warranty.

Mounting on a table

1 Lift and tilt the Monitor into its upright position on a table.

Leave a 10 cm (minimum) space from the wall for proper ventilation.

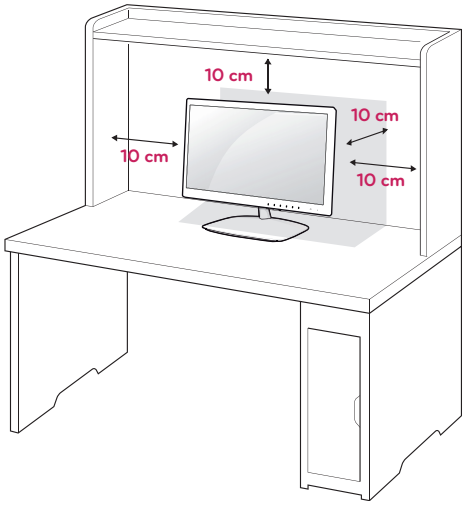

2 Connect the AC-DC Adapter and Power Cord to a wall outlet.

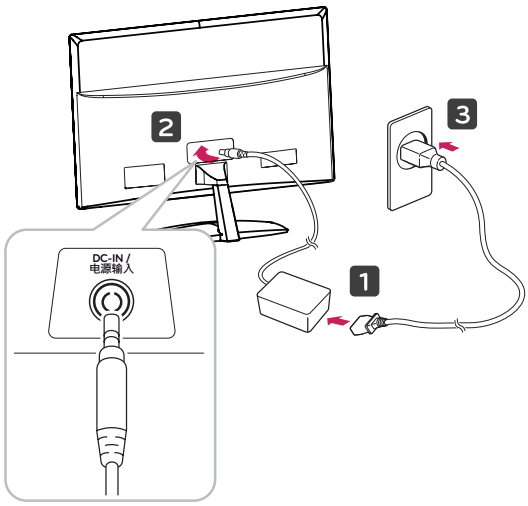

CAUTION

Disconnect the power cord first, and then move or install the Monitor. Otherwise electric shock may occur.

WARNING

When you adjust the angle, do not hold the bottom of the Monitor frame as shown on the following illustration, as it may injure your fingers.

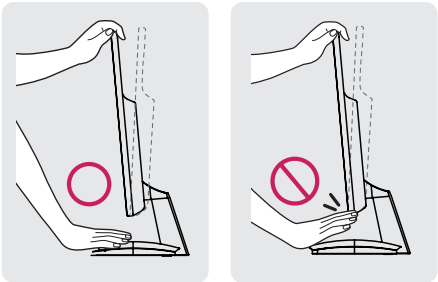

Do not touch or press the screen when adjusting the angle of the monitor.

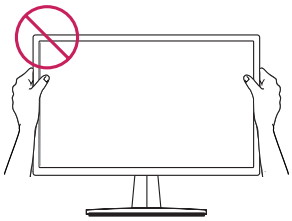

NOTE

Tilt from +15 to -5 degrees up or down to adjust the angle of the Monitor to suit your view.

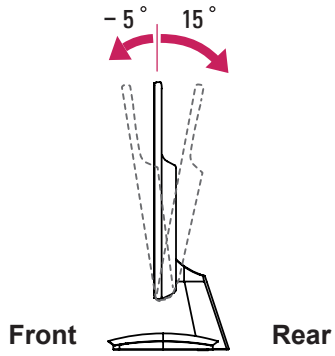

Using the Kensington security system

The Kensington security system connector is located at the back of the Monitor. For more information of installation and using, refer to the manual supplied with the Kensington security system or visit *http://www.kensington.com*.

Connect the Kensington security system cable between the Monitor and a table.

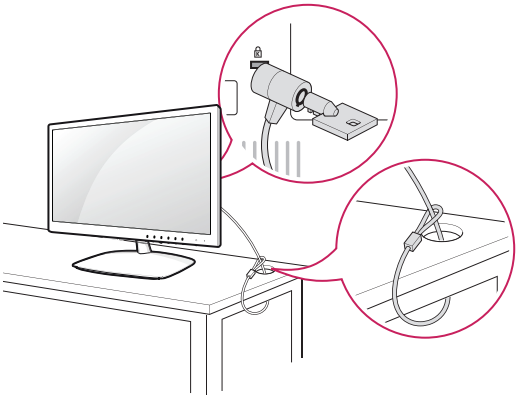

NOTE

The Kensington security system is optional. You can obtain it from most electronics stores.

Detaching the Stand Base and the Stand Body

1 Place the Monitor with the screen side down on a flat and cushioned surface.

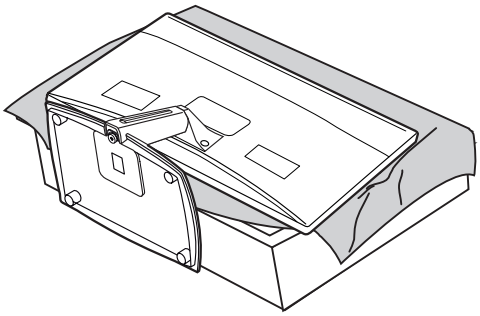

2 Using a **coin**, turn the **screw** in the Stand Base counterclockwise. Detach the **Stand Base** from the **Stand Body**.

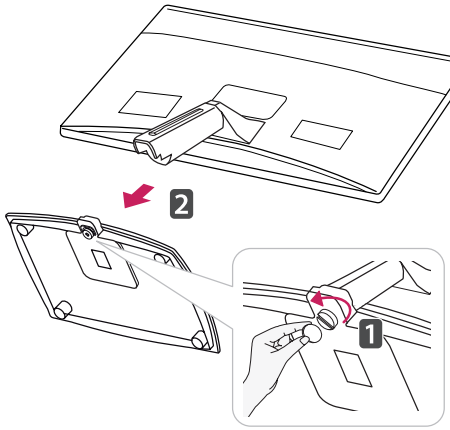

3 Remove the 2 screws and detach the **Stand Body** from the monitor.

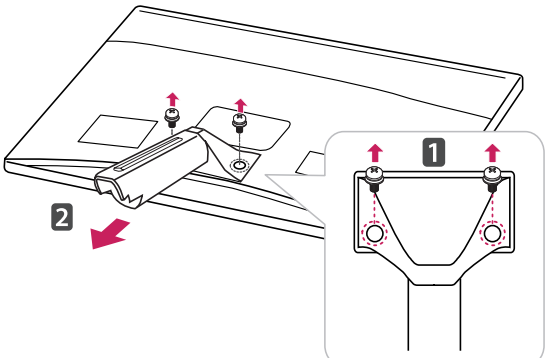

Mounting on a wall

For proper ventilation, allow a clearance of 10 cm on each side and from the wall. Detailed instructions are available from your dealer, see the optional Tilt Wall Mounting Bracket Installation and Setup Guide.

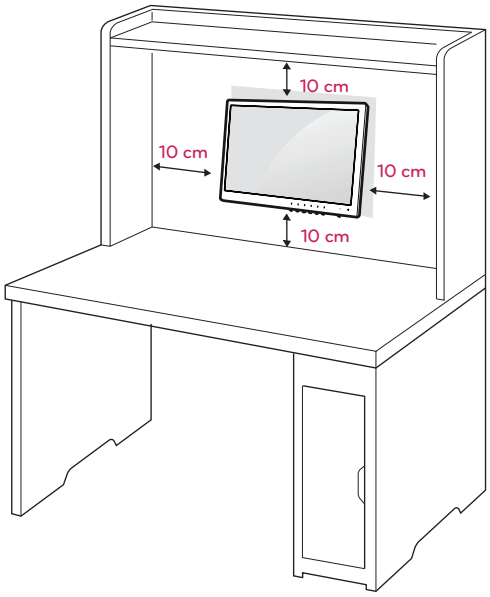

If intend to mount the Monitor to a wall, an optional third-party wall mount must be purchased.
When you install the Monitor using the wall mounting interface (optional parts), attach it carefully so it will not fall.

1 Please use screws and a wall mount interface in accordance with VESA Standards.
2 If you use screws longer than standard, the monitor might be damaged internally.
3 If you use improper screws, the product might be damaged and drop from mounted position. In this case, LG Electronics is not responsible for it.
4 VESA compatible only with respect to screw mounting interface dimensions and mounting screw specifications.
5 Please use a VESA standard as below.

- 784.8 mm (30.9 inch) and under
  * Wall Mount Pad Thickness : 2.6 mm
  * Screw : Φ 4.0 mm x Pitch 0.7 mm x Length 10 mm
- 787.4 mm (31.0 inch) and above
  * Please use VESA standard wall mount pad and screws.

Model	E1951S, E2051S, E2251S, E1951T, E2051T, E2251T, E2351T, E2351TC, E1951C, E2051C, E2251C, E2251VR, E2351VR, E2251VQ, E2351VQ
VESA (A x B)	75 x 75
Screw Size	M4
Number of screws	4
Wall mount bracket (optional)	RW120 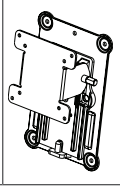

- VESA (A x B)

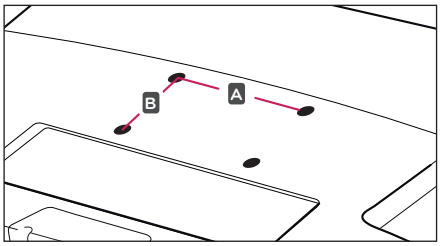

CAUTION

- Disconnect the power cord first before moving or installing the Monitor. Otherwise electric shock may occur.
- If you install the Monitor on a ceiling or slanted wall, it may fall and result in severe injury.
- Use only an authorized LG wall mount and contact a local dealer or qualified personnel.
- Do not over tighten the screws as this may cause damage to the Monitor and void your warranty.
- Use only screws and wall mounts that meet the VESA standard. Any damages or injuries by misuse or using an improper accessory are not covered by the warranty.

NOTE

- Only use screws that are listed on the VESA standard screw specifications.
- The wall mount kit will include an installation manual and necessary parts.
- The wall mount bracket is optional. You can obtain additional accessories from your local dealer.
- The length of screws may differ depending on the wall mount. Be sure to use the proper length.
- For more information, refer to the instructions supplied with the wall mount.

USING THE MONITOR

Connecting to a PC

- Your Monitor supports Plug & Play*.
  *Plug & Play: A PC recognizes a connected device that users connect to a PC and turn on, without device configuration or user intervention.

D-SUB connection

Transmits analog video from your PC to the Monitor. Connect the PC and the Monitor with the supplied D-sub 15 pin signal cable as shown in the following illustrations.

E1951S E2051S E2251S
E1951C E2051C E2251C

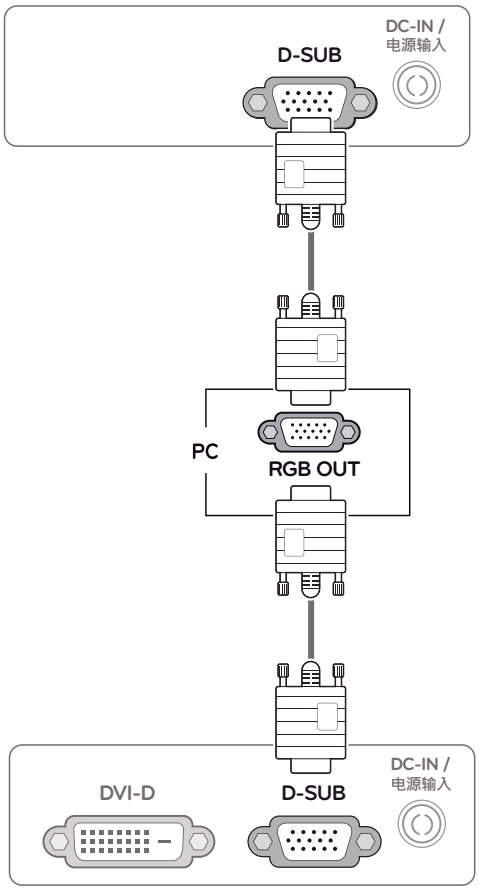

E1951T E2051T E2251T
E2351T E2351TC

E2251VR E2351VR E2251VQ E2351VQ

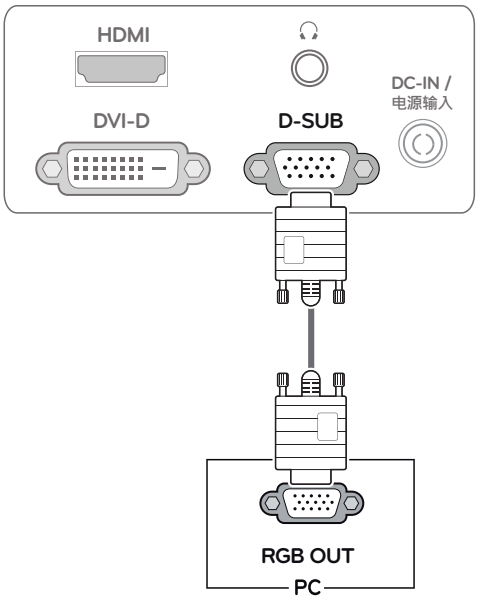

NOTE

- **Apple Adapter**
  An adapter may be needed for Apple computers. This adapter can be purchased from Apple.

DVI-D connection

Transmits the digital video signal from your PC to the Monitor. Connect the PC and the Monitor set with the DVI-D cable as shown the following illustrations.

E1951T E2051T E2251T
E2351T E2351TC

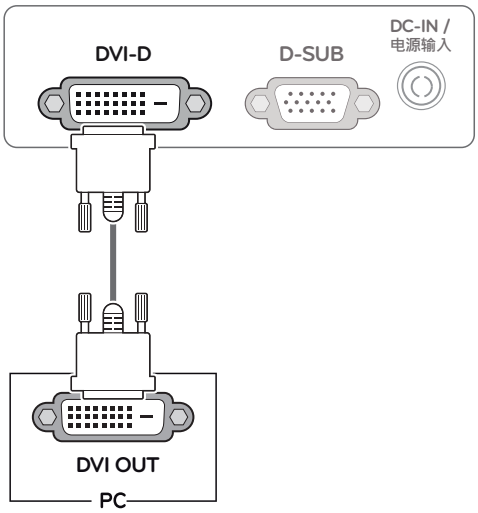

E2251VR E2351VR E2251VQ E2351VQ

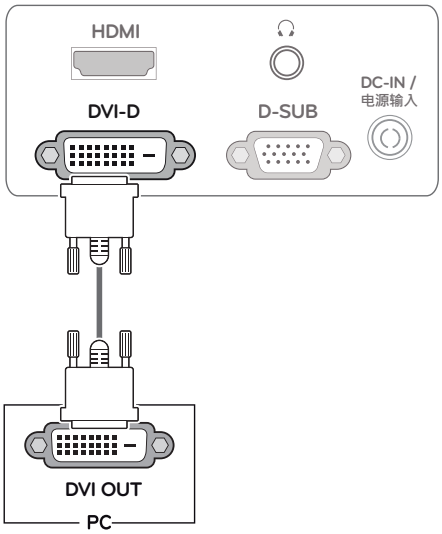

CAUTION

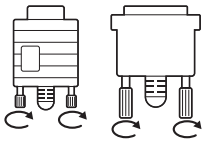

- Connect the signal input cable and tighten it by turning the screws clockwise.
- Do not press the screen with your finger for a long time as this may result in temporary distortion on the screen.
- Avoid displaying a fixed image on the screen for a long period of time to prevent image burn. Use a screensaver if possible.

HDMI connection

Transmits the digital video and audio signals from your PC or A/V to the Monitor. Connect the PC or A/V and the Monitor with the HDMI cable as shown in the following illustrations. When the HDMI cable is connected, you can listen to the sound through headphones, earphones or an external speaker.

E2251VR E2351VR E2251VQ E2351VQ

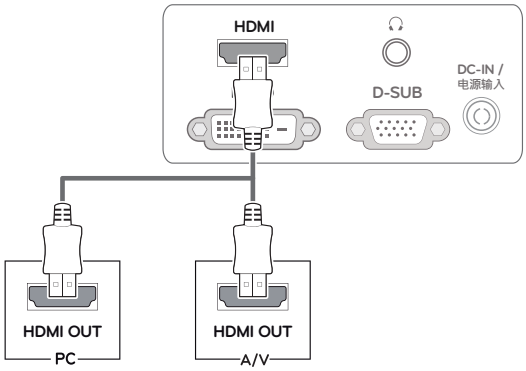

NOTE

- When you want to use two PC in our Monitor, please connect the signal cable(D-SUB/ DVI-D/ HDMI) respectively in Monitor.
- If you turn the Monitor on while it is cold, the screen may flicker. This is normal.
- Some red, green, or blue spots may appear on the screen. This is normal.
- Sound output is available only in HDMI input mode. The quality of the sound may be reduced depending on the performance of headphones, earphones or external speaker.

Self Image Setting Function

Press the power button on the front panel to turn the power on. When monitor power is turned on, the **"Self Image Setting"** Function is executed automatically. (Only supported in Analog Mode)

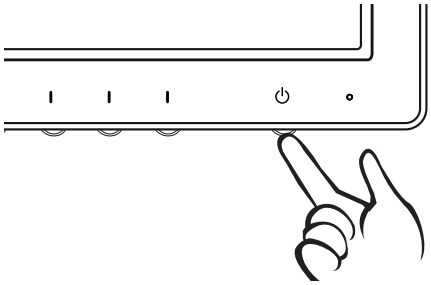

NOTE

- **"Self Image Setting" Function.**
  This function provides the user with optimal display settings.When the user connects the monitor for the first time, this function automatically adjusts the display to optimal settings for individual input signals.(Only supported in Analog Mode)
- **'AUTO' Function.**
  When you encounter problems such as blurry screen, blurred letters, screen flicker or tilted screen while using the device or after changing screen resolution, press the AUTO function button to improve resolution. (Only supported in Analog Mode)

ENGLISH

CUSTOMIZING SETTINGS

Accessing The Main Menus

1 Press any button on the front of the Monitor to display the **MONITOR SETUP** OSD menu.

2 Press the desired menu item.

3 Change the value of the menu item by pressing the buttons on the front of the Monitor.
To return to the upper menu or set other menu items, use the up arrow (⮝) button.

4 Select **EXIT** to leave the OSD menu.

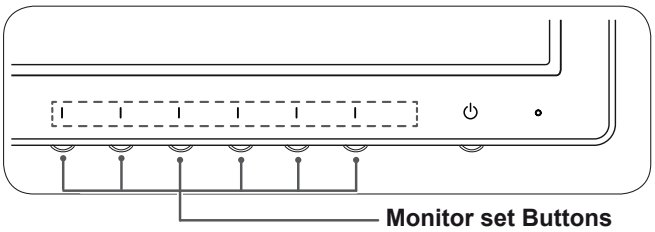

MENU (See p.15)
Sets the screen options.

AUTO (See p.5)
Optimizes the resolution.

EXIT
Exits the OSD menu.

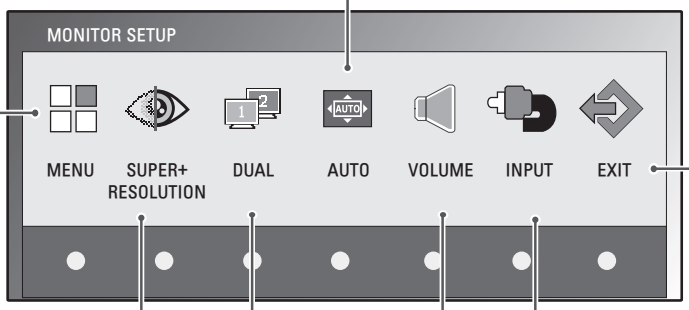

SUPER+ RESOLUTION (See p.17)

DUAL (See p.18)

VOLUME (See p.17)

INPUT
Sets the external input.

NOTE

Different menu items are enabled depending on the type of input signal and model.

	Menu	SUPER+ RESOLUTION	DUAL	AUTO	VOLUME	INPUT	EXIT
E1951S/ E2051S/ E2251S E1951C/ E2051C/ E2251C	O	X	O	O	X	X	O
E1951T/ E2051T/ E2251T/ E2351T/ E2351TC	O	X	O	O	X	O	O
E2251VR/ E2351VR (Analog/ Digital)	O	O	O	O	X	O	O
E2251VR/ E2351VR (HDMI)	O	O	O	X	O	O	O
E2251VQ/ E2351VQ (Analog/ Digital)	O	X	O	O	X	O	O
E2251VQ/ E2351VQ (HDMI)	O	X	O	X	O	O	O

Customizing Settings

MENU Settings

1 Press any button on the front of the Monitor to display the **MONITOR SETUP** OSD menu.

2 Press the **MENU** button to display the options in the OSD menu.

3 Set the options by pressing the ◀ or ▶ or ▼ buttons.

4 Select **EXIT** to leave the OSD menu.
To return to the upper menu or set other menu items, use the up arrow (⮝) button.

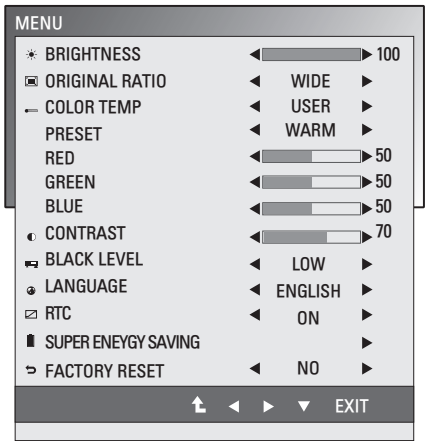

The available **MENU** settings are described below.

Menu	Analog	Digital	HDMI	Description
BRIGHTNESS	O	O	O	Adjusts the brightness of the screen.
ORIGINAL RATIO	O	O	O	**WIDE** Switch to full screen mode according to input image signal. **ORIGINAL** Change the input image signal ratio to original. * This function works only if input resolution is lower than Monitor ratio (16:9).
COLOR TEMP	O	O	O	**PRESET** Select the screen color. • **WARM:** Set the screen to warm color temperature (more red). • **MEDIUM:** Set the screen to medium color temperature. • **COOL:** Set the screen to cool color temperature (More blue). **USER** • **RED:** Set your own red color levels. • **GREEN:** Set your own green color levels. • **BLUE:** Set your own blue color levels.
CONTRAST	O	O	O	Adjusts the contrast of the screen.
BLACK LEVEL (Only supported in HDMI mode)	X	X	O	You can set the offset level. If you select 'HIGH', the screen will be bright and if you select 'LOW', the screen will be dark. • **Offset:** As the criteria for video signal, it is the darkest screen the monitor can show.
LANGUAGE	O	O	O	Changes the menu language.
RTC (Only supported in E2251VQ, E2351VQ model)	O	O	O	If you set **ON**, you enable the Response Time Control function and reduce the afterimage of the screen. If you set **OFF**, you disable the Response Time Control function and operate at panel response time.
SUPER ENERGY SAVING	O	O	O	Change the **SUPER ENERGY SAVING** function. (See p.16)
FACTORY RESET	O	O	O	Returns the monitor to original factory settings except language.

- **Analog:** D-SUB(Analog signal) input.
- **Digital:** DVI-D(Digital signal) input.
- **HDMI:** HDMI(Digital signal) input.

ENGLISH

SUPER ENERGY SAVING Settings

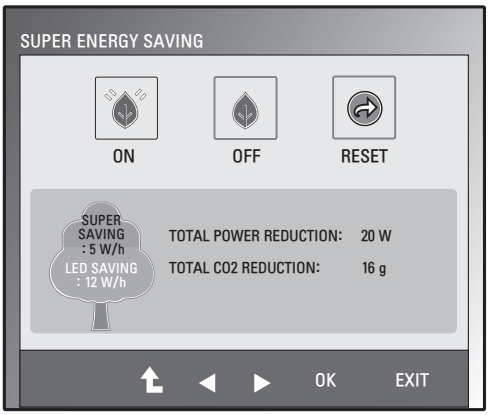

1 Press any button on the front of the Monitor to display the **MONITOR SETUP** OSD menu.

2 Press the **MENU** button to display the options in the OSD Menu.

3 Select **SUPER ENERGY SAVING** by pressing the ▼ button.

4 Enter to **SUPER ENERGY SAVING** by pressing the ► button.

5 Set the options by pressing ◄ or ► buttons.

6 Select **EXIT** to leave the OSD menu.
To return to the upper menu or set other menu items, use the up arrow (⮅) button.

The available **SUPER ENERGY SAVING** settings are described below.

Menu	Description
ON	Enables **SUPER ENERGY SAVING**.
OFF	Disables **SUPER ENERGY SAVING**.
RESET	Resets the values of total energy consumption reduction and CO2 emission reduction estimates.

NOTE

- **TOTAL POWER REDUCTION**: How much power is saved while using the monitor.
- **TOTAL CO2 REDUCTION**: Estimated CO2 not used by activating the Super Energy Saving function.
- **SAVING DATA(W/h)**

	470 mm (18.5 inch)	508 mm (20 inch)	546 mm (21.5 inch)	584 mm (23 inch)
SUPER SAVING	3 W/h	3 W/h	4 W/h	5 W/h
LED SAVING	3 W/h	18 W/h	15 W/h	12 W/h

- Saving Data depends on the Panel. So,those values should be different from each panel and panel vendor.
- LG calculated these values by using “broadcast video signal”.
- LED Saving means how much power can be saved using a WLED Panel instead of CCFL panel.
- SUPER SAVING means how much power can be saved using the SUPER ENERGY SAVING function.

SUPER+ RESOLUTION Settings

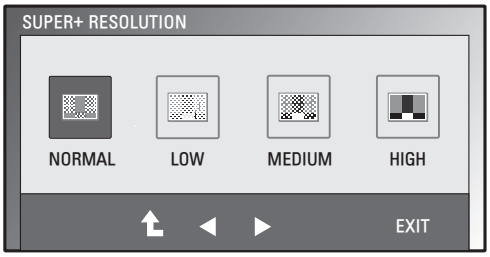

1 Press any button on the front of the Monitor to display the **MONITOR SETUP** OSD menu.

2 Press the **SUPER+ RESOLUTION** button to display the options in the OSD menu.

3 Set the options by pressing ◄ or ► buttons.

4 Select **EXIT** to leave the OSD menu.
To return to the upper menu or set other menu items, use the up arrow (⮝) button.

The available **SUPER+ RESOLUTION** settings are described below.

Menu	Description
NORMAL	Select this option for everyday viewing. **SUPER+ RESOLUTION** is turned off in this mode.
LOW	Select this option for viewing natural and soft images. It is suitable for still images or video with little movement.
MEDIUM	Select this option for eye-comforting viewing between **LOW** and **HIGH** modes. It is suitable for UCC and SD videos.
HIGH	Select this option for viewing vivid and clear images. It is suitable for high resolution videos and games.

NOTE

- **SR (SUPER+ RESOLUTION) will help remove noise from video.**

VOLUME Settings (Only supported in HDMI)

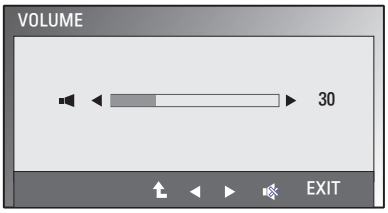

1 Press any button on the front of the Monitor to display the **MONITOR SETUP** OSD menu.

2 Press the **VOLUME** button to display the options in the OSD menu.

3 Adjust the **VOLUME** by pressing ◄ or ► buttons.

4 Select **EXIT** to leave the OSD menu.
To return to the upper menu or set other menu items, use the up arrow (⮝) button.

DUAL MONITOR Settings

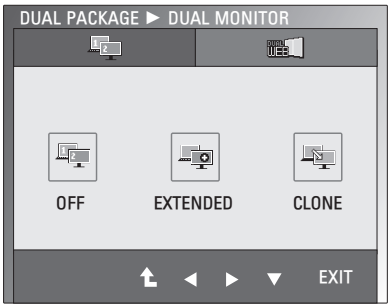

1 Press any button on the front of the Monitor to display the **MONITOR SETUP** OSD menu.

2 Press the **DUAL** button to display the options in the OSD menu.

3 Set the options by pressing ▼ and then ◄ and ► buttons.

4 Select **EXIT** to leave the OSD menu.
To return to the upper menu or set other menu items, use the up arrow (⮝) button.

The available **DUAL MONITOR** settings are described below.

Menu	Description	
DUAL MONITOR	**OFF**	Turns the **DUAL MONITOR** feature off.
	EXTENDED	Extends the desktop of the primary monitor to the secondary monitor.
	CLONE	Shows the same video on both monitors.

DUAL WEB Settings

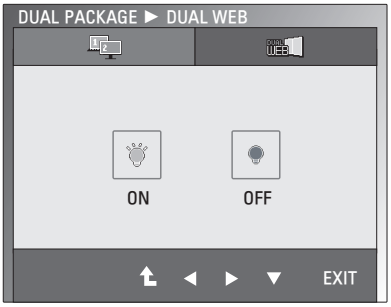

1 Press any button on the front of the Monitor to display the **MONITOR SETUP** OSD menu.

2 Press the **DUAL** button to display the options in the OSD menu.

3 Set the options by pressing ▼ and then ◄ and ► buttons.

4 Select **EXIT** to leave the OSD menu.
To return to the upper menu or set other menu items, use the up arrow (⮝) button.

The available **DUAL WEB** settings are described below.

Menu	Description	
DUAL WEB	**ON**	Automatically arranges (snaps) web pages to each half of the screen.
	OFF	Turns the **DUAL WEB** feature off.

NOTE

- When the monitor is in power saving mode, pressing any button and then selecting **DUAL**, the monitor will return to normal operation.
- The **Dual Package** program provided with the monitor should be installed on the PC to use the **DUAL MONITOR** and **DUAL WEB** functions.

TROUBLESHOOTING

Check the following before calling for service.

No image appears	
Is the power cord of the display connected?	• Check and see if the power cord is connected properly to the power outlet.
Is the power indicator light on?	• Press the Power button.
Is the power indicator blink?	• If the display is in power saving mode, try moving the mouse or pressing any key on the keyboard to bring up the screen. • Try to turn on the PC.
Do you see an "OUT OF RANGE" message on the screen?	• This message appears when the signal from the PC (video card) is out of horizontal or vertical frequency range of the display. See the 'Specifications' section of this manual and configure your display again.
Do you see a "CHECK SIGNAL CABLE" message on the screen?	• This message appears when the signal cable between your PC and your display is not connected. Check the signal cable and try again.

Do you see a "OSD LOCKED" message on the screen?	
Do you see “OSD LOCKED” when you push Left First Button?	• You can secure the current control settings, so that they cannot be inadvertently changed. You can unlock the OSD controls at any time by pushing the left first button for several seconds: the message “OSD UNLOCKED” will appear.

Display image is incorrect	
Display Position is incorrect.	• Press the **AUTO** button to automatically adjust your display image to the ideal setting.
On the screen background, vertical bars or stripes are visible.	• Press the **AUTO** button to automatically adjust your display image to the ideal setting.
Any horizontal noise appearing in any image or characters are not clearly portrayed.	• Press the **AUTO** button to automatically adjust your display image to the ideal setting. • Check **Control Panel ► Display ► Settings** and adjust the display to the recommended resolution or adjust the display image to the ideal setting. Set the color setting higher than 24 bits (true color).

CAUTION

- Check **Control Panel ► Display ► Settings** and see if the frequency or the resolution were changed. If yes, readjust the video card to the recommend resolution.
- If the recommended resolution (optimal resolution) is not selected, letters may be blurred and the screen may be dimmed, truncated or biased. Make sure to select the recommend resolution.
- The setting method can differ by computer and O/S (Operating System), and resolution mentioned above may not be supported by the video card performance. In this case, please ask to the computer or the video card manufacturer.

Display image is incorrect	
The screen color is mono or abnormal.	• Check if the signal cable is properly connected and use a screwdriver to fasten if necessary. • Make sure the video card is properly inserted in the slot. • Set the color setting higher than 24 bits (true color) at **Control Panel ► Settings**.
The screen blinks.	• Check if the screen is set to interlace mode and if yes, change it to the recommend resolution.

Do you see an "Unrecognized monitor, Plug&Play (VESA DDC) monitor found" message?	
Have you installed the display driver?	• A Windows display driver is included on the CD. Or, you can also download the driver from our web site: http://www.lg.com. • Make sure to check if the video card supports Plug&Play function.

The Audio function is not working	
Picture OK & No sound.	• Check whether volume is "0". • Check sound muted. • HDMI cable installed properly. • Head phone cable installed properly. • Check sound format. Not support to compressed sound format.

SPECIFICATIONS

E1951S E1951T E1951C

Display	**Screen Type**	47.01 cm (18.51 inch) Flat Panel Active matrix-TFT LCD Anti-Glare coating Visible diagonal size: 47.01 cm
	Pixel Pitch	0.3 mm x 0.3 mm (Pixel Pitch)
Sync Input	**Horizontal Frequency**	30 kHz to 61 kHz (Automatic)
	Vertical Frequency	56 Hz to 75 Hz (Automatic)
	Input Form	
	E1951S/ E1951C	Separate Sync.
	E1951T	Separate Sync. Digital
Video Input	**Signal Input**	
	E1951S/ E1951C	15 pin D-SUB Connector
	E1951T	15 pin D-SUB Connector /DVI-D Connector (Digital)
	Input Form	
	E1951S/ E1951C	RGB Analog (0.7 Vp-p/ 75 ohm)
	E1951T	RGB Analog (0.7 Vp-p/ 75 ohm), Digital
Resolution	**Max**	
	E1951S/ E1951C	D-SUB(Analog) : 1366 x 768 @ 60 Hz
	E1951T	D-SUB(Analog) / DVI-D(Digital): 1366 x 768 @ 60 Hz
	Recommend	VESA 1366 x 768 @ 60 Hz
Plug & Play	**E1951S/ E1951C**	DDC 2B(Analog)
	E1951T	DDC 2B(Analog,Digital)
Power Consumption	On Mode : 20 W(Typ.) Sleep Mode ≤ 0.5 W Off Mode ≤ 0.5 W	
Power Input	19 V ⎓ 1.3 A	
AC-DC Adapter	Type ADS-40SG-19-3 19025G, manufactured by HONOR Electronic	
Dimensions (Width x Height x Depth)	**With Stand**	44.94 cm x 17.26 cm x 35.6 cm
	Without Stand	44.94 cm x 3.35 cm x 27.9 cm
Weight	2 kg	
Tilt Range	-5° to 15°	
Environmental conditions	**Operating Temperature** **Operating Humidity**	10°C to 35 °C 20 % to 80 % non-Condensing
	Storage Temperature **Storage Humidity**	-10°C to 60 °C 5 % to 90 % non-Condensing
Stand Base	Attached ( ), Detached (O)	
Power cord	Wall-outlet type	

Product specifications shown above may be changed without prior notice due to upgrade of product functions.

ENGLISH

E2051S E2051T E2051C

Display	**Screen Type**	50.805 cm (20.0 inch) Flat Panel Active matrix-TFT LCD Anti-Glare coating Visible diagonal size: 50.805 cm
	Pixel Pitch	0.2766 mm x 0.2766 mm (Pixel Pitch)
Sync Input	**Horizontal Frequency**	30 kHz to 83 kHz (Automatic)
	Vertical Frequency	56 Hz to 75 Hz (Automatic)
	Input Form	
	E2051S/ E2051C	Separate Sync.
	E2051T	Separate Sync. Digital
Video Input	**Signal Input**	
	E2051S/ E2051C	15 pin D-SUB Connector
	E2051T	15 pin D-SUB Connector /DVI-D Connector (Digital)
	Input Form	
	E2051S/ E2051C	RGB Analog (0.7 Vp-p/ 75 ohm)
	E2051T	RGB Analog (0.7 Vp-p/ 75 ohm), Digital
Resolution	**Max**	
	E2051S/ E2051C	D-SUB(Analog) : 1600 x 900 @ 60 Hz
	E2051T	D-SUB(Analog) / DVI-D(Digital): 1600 x 900 @ 60 Hz
	Recommend	VESA 1600 x 900 @ 60 Hz
Plug & Play	**E2051S/ E2051C**	DDC 2B(Analog)
	E2051T	DDC 2B(Analog,Digital)
Power Consumption	On Mode : 21 W(Typ.) Sleep Mode ≤ 0.5 W Off Mode ≤ 0.5 W	
Power Input	19 V ⎓ 1.3 A	
AC-DC Adapter	Type ADS-40SG-19-3 19025G, manufactured by HONOR Electronic	
Dimensions (Width x Height x Depth)	**With Stand**	48.28 cm x 17.42 cm x 37.5 cm
	Without Stand	48.28 cm x 3.35 cm x 29.7 cm
Weight	2.197 kg	
Tilt Range	-5° to 15°	
Environmental conditions	**Operating Temperature** **Operating Humidity**	10°C to 35 °C 20 % to 80 % non-Condensing
	Storage Temperature **Storage Humidity**	-10°C to 60 °C 5 % to 90 % non-Condensing
Stand Base	Attached ( ), Detached (O)	
Power cord	Wall-outlet type	

Product specifications shown above may be changed without prior notice due to upgrade of product functions.

E2251S E2251T E2251C

Display	**Screen Type**	54.686 cm (21.53 inch) Flat Panel Active matrix-TFT LCD Anti-Glare coating. Visible diagonal size: 54.686 cm
	Pixel Pitch	0.248 mm x 0.248 mm (Pixel Pitch)
Sync Input	**Horizontal Frequency**	30 kHz to 83 kHz (Automatic)
	Vertical Frequency	56 Hz to 75 Hz (Automatic)
	Input Form	
	E2251S/ E2251C	Separate Sync.
	E2251T	Separate Sync. Digital
Video Input	**Signal Input**	
	E2251S/ E2251C	15 pin D-SUB Connector
	E2251T	15 pin D-SUB Connector / DVI-D Connector (Digital)
	Input Form	
	E2251S/ E2251C	RGB Analog (0.7 Vp-p/ 75 ohm)
	E2251T	RGB Analog (0.7 Vp-p/ 75 ohm), Digital
Resolution	**Max**	
	E2251S/ E2251C	D-SUB(Analog) : 1920 x 1080 @ 60 Hz
	E2251T	D-SUB(Analog) / DVI-D(Digital) : 1920 x 1080 @ 60 Hz
	Recommend	VESA 1920 x 1080 @ 60 Hz
Plug & Play	**E2251S/ E2251C**	DDC 2B(Analog)
	E2251T	DDC 2B(Analog, Digital)
Power Consumption	On Mode : 26 W(Typ.) Sleep Mode ≤ 0.5 W Off Mode ≤ 0.5 W	
Power Input	19 V ⎓ 1.3 A	
AC-DC Adapter	Type ADS-40SG-19-3 19025G, manufactured by HONOR Electronic	
Dimensions (Width x Height x Depth)	**With Stand**	51.75 cm x 18.65 cm x 39.4 cm
	Without Stand	51.75 cm x 3.35 cm x 31.7 cm
Weight	2.477 kg	
Tilt Range	-5° to 15°	
Environmental conditions	**Operating Temperature** **Operating Humidity**	10°C to 35 °C 20 % to 80 % non-Condensing
	Storage Temperature **Storage Humidity**	-10°C to 60 °C 5 % to 90 % non-Condensing
Stand Base	Attached ( ), Detached (O)	
Power cord	Wall-outlet type	

Product specifications shown above may be changed without prior notice due to upgrade of product functions.

ENGLISH

E2251VR E2251VQ

Display	**Screen Type**	54.686 cm (21.53 inch) Flat Panel Active matrix-TFT LCD Anti-Glare coating. Visible diagonal size: 54.686 cm
	Pixel Pitch	0.248 mm x 0.248 mm (Pixel Pitch)
Sync Input	**Horizontal Frequency**	30 kHz to 83 kHz (Automatic)
	Vertical Frequency	56 Hz to 75 Hz (D-SUB, DVI-D) 56 Hz to 61 Hz (HDMI)
	Input Form	Separate Sync. Digital. HDMI
Video Input	**Signal Input**	15 pin D-SUB Connector DVI-D Connector (Digital) HDMI (TYPE - A) Connector
	Input Form	RGB Analog (0.7 Vp-p/ 75 ohm), Digital, HDMI
Resolution	**Max**	D-SUB(Analog) :1920 x 1080 @ 60 Hz DVI-D(Digital) / HDMI(Digital) :1920 x 1080 @ 60 Hz
	Recommend	VESA 1920 x 1080 @ 60 Hz
Plug & Play	DDC 2B(Analog, Digital, HDMI)	
Power Consumption	On Mode : 26 W(Typ.) Sleep Mode ≤ 0.5 W Off Mode ≤ 0.5 W	
Power Input	19 V ⎓ 1.7 A	
AC-DC Adapter	Type ADS-40SG-19-3 19032G, manufactured by HONOR Electronic	
Dimensions (Width x Height x Depth)	**With Stand**	51.75 cm x 18.65 cm x 39.4 cm
	Without Stand	51.75 cm x 3.35 cm x 31.7 cm
Weight	2.477 kg	
Tilt Range	-5° to 15°	
Environmental conditions	**Operating Temperature** **Operating Humidity**	10°C to 35 °C 20 % to 80 % non-Condensing
	Storage Temperature **Storage Humidity**	-10°C to 60 °C 5 % to 90 % non-Condensing
Stand Base	Attached ( ), Detached (O)	
Power cord	Wall-outlet type	

Product specifications shown above may be changed without prior notice due to upgrade of product functions.

E2351T E2351TC E2351VR E2351VQ

Display	**Screen Type**	58.42 cm (23 inch) Flat Panel Active matrix-TFT LCD Anti-Glare coating Visible diagonal size: 58.42 cm
	Pixel Pitch	0.265 mm x 0.265 mm (Pixel Pitch)
Sync Input	**Horizontal Frequency**	30 kHz to 83 kHz (Automatic)
	Vertical Frequency	
	E2351T/ E2351TC	56 Hz to 75 Hz (Automatic)
	E2351VR/ E2351VQ	56 Hz to 75 Hz (D-SUB, DVI-D) 56 Hz to 61 Hz (HDMI)
	Input Form	
	E2351T/ E2351TC	Separate Sync. Digital
	E2351VR/ E2351VQ	Separate Sync. Digital. HDMI
Video Input	**Signal Input**	
	E2351T/ E2351TC	15 pin D-SUB Connector / DVI-D Connector (Digital)
	E2351VR/ E2351VQ	15 pin D-SUB Connector / DVI-D Connector (Digital) HDMI (TYPE - A) Connector
	Input Form	
	E2351T/ E2351TC	RGB Analog (0.7 Vp-p/ 75 ohm), Digital
	E2351VR/ E2351VQ	RGB Analog (0.7 Vp-p/ 75 ohm), Digital, HDMI
Resolution	**Max**	
	E2351T/ E2351TC	D-SUB(Analog) / DVI-D (Digital) : 1920 x 1080 @ 60 Hz
	E2351VR/ E2351VQ	D-SUB(Analog) : 1920 x 1080 @ 60 Hz DVI-D(Digital) / HDMI(Digital) : 1920 x 1080 @ 60 Hz
	Recommend	VESA 1920 x 1080 @ 60 Hz
Plug & Play	**E2351T/ E2351TC**	DDC 2B(Analog, Digital)
	E2351VR/ E2351VQ	DDC 2B(Analog, Digital, HDMI)
Power Consumption	On Mode : 30 W(Typ.) Sleep Mode ≤ 0.5 W Off Mode ≤ 0.5 W	
Power Input	19 V ⎓ 1.7 A	
AC-DC Adapter	Type ADS-40SG-19-3 19032G, manufactured by HONOR Electronic	
Dimensions (Width x Height x Depth)	**With Stand**	54.92 cm x 18.65 cm x 41.2 cm
	Without Stand	54.92 cm x 3.35 cm x 33.5 cm
Weight	2.724 kg	
Tilt Range	-5° to 15°	
Environmental conditions	**Operating Temperature** **Operating Humidity**	10°C to 35 °C 20 % to 80 % non-Condensing
	Storage Temperature **Storage Humidity**	-10°C to 60 °C 5 % to 90 % non-Condensing
Stand Base	Attached ( ), Detached (O)	
Power cord	Wall-outlet type	

Product specifications shown above may be changed without prior notice due to upgrade of product functions.

Preset Modes (Resolution)

E1951S/ E1951T/ E1951C

Display Modes (Resolution)	Horizontal Frequency(kHz)	Vertical Frequency(Hz)	
720 x 400	31.468	70.08	
640 x 480	31.469	59.94	
640 x 480	37.500	75	
800 x 600	37.879	60.317	
800 x 600	46.875	75	
832 x 624	49.725	74.55	
1024 x 768	48.363	60	
1024 x 768	60.023	75.029	
1366 x 768	47.712	59.790	Recommend Mode

E2051S/ E2051T/ E2051C

Display Modes (Resolution)	Horizontal Frequency(kHz)	Vertical Frequency(Hz)	
720 x 400	31.468	70.08	
640 x 480	31.469	59.94	
640 x 480	37.500	75	
800 x 600	37.879	60.317	
800 x 600	46.875	75	
1024 x 768	48.363	60	
1024 x 768	60.023	75.029	
1152 x 864	67.500	75	
1600 x 900	60.000	60	Recommend Mode

E2251S/ E2251T/ E2251C/ E2251VR/ E2251VQ/ E2351T/ E2351TC/ E2351VR/ E2351VQ

Display Modes (Resolution)	Horizontal Frequency(kHz)	Vertical Frequency(Hz)	
720 x 400	31.468	70.08	●
640 x 480	31.469	59.94	
640 x 480	37.500	75	●
800 x 600	37.879	60.317	
800 x 600	46.875	75	●
1024 x 768	48.363	60	
1024 x 768	60.023	75.029	●
1152 x 864	67.500	75	●
1280 x 1024	63.981	60.020	
1280 x 1024	79.976	75.025	●
1680 x 1050	65.290	59.954	
1920 x 1080	67.500	60	Recommend Mode

● : HDMI PC mode is not supported.

HDMI Video Timing

E2251VR / E2251VQ / E2351VR / E2351VQ

Display Modes (Resolution)	Horizontal Frequency(kHz)	Vertical Frequency(Hz)
480P	31.50	60
576P	31.25	50
720P	37.50	50
720P	45.00	60
1080i	28.12	50
1080i	33.75	60
1080P	56.25	50
1080P	67.50	60

Indicator

Mode	LED Color
On Mode	Blue
Sleep Mode	Blinking Blue
Off Mode	Off

PROPER POSTURE

Proper posture for using the Monitor.

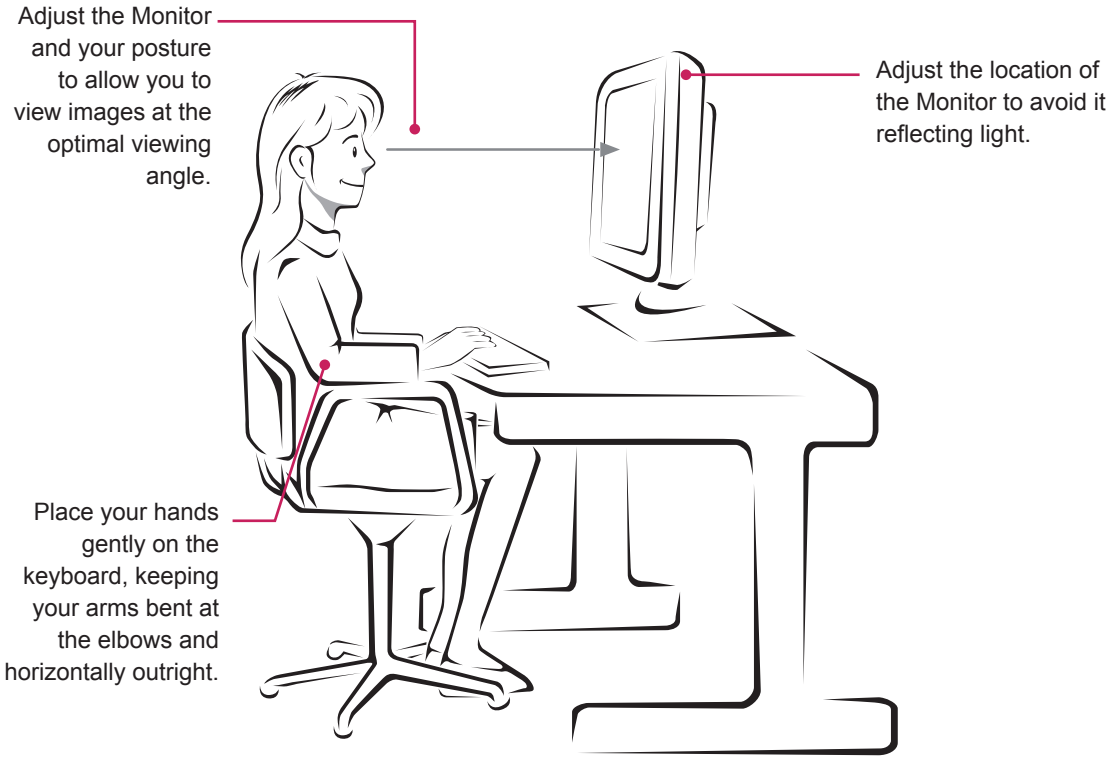

LICENSES

Supported licenses may differ by model. For more information of the licenses, visit www.lg.com.

HDMI, the HDMI logo and High-Definition Multimedia Interface are trademarks or registered trademarks of HDMI Licensing LLC.

Make sure to read the Safety Precautions before using the product.
Keep the Owner's Manual (CD) in an accessible place for future reference.
The model and serial number of the SET is located on the back and one side of the SET.
Record it below should you ever need service.

MODEL _____

SERIAL _____

ENERGY STAR is a set of power-saving guidelines issued by the U.S.Environmental Protection Agency(EPA).

As an ENERGY STAR Partner LGE U. S. A.,Inc. has determined that this product meets the ENERGY STAR guidelines for energy efficiency.