LG
Life's Good

Operating Instructions

Built in Oven

Please read this instruction manual carefully before using the oven.
This will ensure that you know the important safety information and the correct operation of the oven.
Please keep this manual in a easily accessible place and refer to them anytime. Please transfer this manual to new owner if you sell the oven.

LB621120S

MFL67204702

www.lg.com

Foreword

Dear Customer,

You have purchased a high-quality appliance from our Company. Thank you for your purchase.

To ensure many years of pleasure in the use of your oven, and to familiarise yourself with all of the appliance's functions, please read through this Instruction Manual carefully.

Please pay particular attention to the section containing safety instructions in the first few pages.

Keep the Instruction Manual in a safe place for reference if questions should arise. If you should sell the appliance on, please pass the Instruction Manual on to the new owner.

Contents

Safety ..... 6~10
Appliance description 11
Control panel ..... 12~13
Accessories 14
Telescopic slides (special accessory) 15
Before initial use 16
Setting the time of day 16
Initial cleaning 17
Using the oven ..... 18~30
Operating modes ..... 18~20
Switching the oven on 21
Switching the oven off 22
Clock functions and symbols 23
Setting the timers 24
Programming the overall cooking / baking time 25
Programming the end of cooking / baking time..... 26
Combining overall cooking / baking time and end of cooking / baking time..... 27~28
Setting the time of day 29
Childproof safety device..... 30
Baking ..... 31~32
Roasting 33

Grilling ..... **34~35**
Grilling table 35
Defrosting **36**
Defrosting table 36
Cleaning and care ..... **37~39**
Oven light **40**
Oven door ..... **41~47**
Troubleshooting ..... **48~49**
Technical specifications ..... **50~51**
Installation instructions **52**
Customer service & spare parts **53**
Warranty ..... **54~57**

Safety

- This oven must only be installed by a licensed electrician.
- The installer is responsible for the correct electrical connection of the appliances and the observance of the relative safety recommendations.

Electrical Safety

If the oven has been damaged in transport, do not connect it.

- This appliance must be connected to the mains power supply by a specially licensed electrician only.
- In the event of a fault or damage to the appliance, do not attempt to operate it.
- Repairs of the appliance should be carried out by a licensed technician only. Wrong repairs may result in considerable danger. If you need repairs, contact an LG Service Center or your dealer
- If supply cord is damaged, it must be replaced by a special cord or assembly available from the manufacturer, its service agent.
- Electrical leads and cables should not be allowed to touch the oven.
- The oven should be connected to the electricity supply by means of a proper circuit breaker or fuse.
  Never use multiple plug adapters or extension leads.

- Rating plate is located on the left side of door and on the back cover.
- The power supply of the appliance should be turned off when it is being repaired or cleaned.
- Be careful in connecting electrical appliances to sockets near to this appliance.
- This connection may be achieved by having the plug accessible or by incorporation a switch in the fixed wiring in accordance with the wiring rules.
- Do not use harsh abrasive cleaners or sharp metal scrapers to clean the oven door glass since they can scratch the surface, which may result in shattering of the glass.

⚠ **Warning:** The appliance should be powered down before replacing the lamp to avoid the possibility of electric shock.

⚠ **Warning:** When the oven operates, the interior parts will be very hot.

⚠ **Warning:** Accessible parts may become hot during use. Young children should be kept away.

⚠ **Warning:** Accessible parts may become hot when the grill is in use. Children should be kept away.

⚠ **Warning:** Please ensure cooking times are correctly set as over cooking may result in the food catching fire and subsequent damage to your oven.

Safety

Safety during Operation

- This oven has been designed only for the cooking of household foods.
- When in use, the oven interior surfaces become very hot! Care should be taken to avoid touching heating elements inside the oven.
- Never store flammable or easily deformable materials in the oven.
- The oven surfaces will become hot when the appliance is operated at a high temperature for a long period of time.
- Excess spillage should be removed before self cleaning and all utensils should not be left in the oven during pyrolytic selfcleaning.
- During self cleaning the surfaces get hotter than usual and children should be kept at a safe distance.
- When cooking, take care when openning the oven door as hot air and steam will escape rapidly.
- When cooking dishes that contain alcohol, the alcohol can evaporate due to the high temperatures. The vapour can catch fire if it comes into contact with a hot oven part.
- Do not use high-pressure water cleaners or steam jet cleaners for electrical safety reasons.
- The instructions for ovens that have shelves shall include details indicating the correct installation of the shelves.
- Children should be kept at a safe distance when the oven operates.
- Frozen foods such as pizzas should be cooked on the wire grill. If the Baking tray is used, it may become deformed due to the great difference in temperature.
- Don’t pour water into the oven bottom when it is hot. This could cause damage to the enamel surfaces.
- The oven door must be closed when cooking is performing.

- Don’t spread aluminium foil on the bottom of the oven and do not place any baking trays or tins on it.
  The aluminium foil blocks the heat, which may result in damage to the enamel surfaces and cause poor cooking results.
- Dripping fruit juices from the baking tray will leave stains, which become indelible. When cooking very moist cakes, use the deep pan.
- Do not use the oven door as a rest table for hot or cold cookwares.
- The appliance is not intended for use by young children or infirm persons without supervision.
- Young children should be supervised to ensure that they do not play with the appliance.
- Children should be kept at a safe distance until the oven has cooled down after cooking.
- This appliance is not intended for use by persons (including children) with reduced physical, sensory or mental capabilities, or lack of experience and knowledge, unless they have been given supervision or instruction concerning use of the appliance by a person responsible for their safety.

Disposal

Packaging material

- Your new oven has been correctly packaged for transportation. Remove all of the packaging material before putting the appliance into use.
- The packaging material can be completely recycled. You can obtain addresses for environmentally-friendly disposal operations from your local authority.

Used appliances

⚠ Warning

- Used appliances must be rendered unusable prior to disposal so that they no longer present a risk. To achieve this, disconnect from the mains supply and remove the power supply cable.

For the protection of the environment, used appliances must be disposed of properly.

- The appliance must not be disposed of along with normal domestic waste.
- Your local authority will inform you of times for uplifting special waste or identify public disposal facilities for you.

Appliance description

Overview

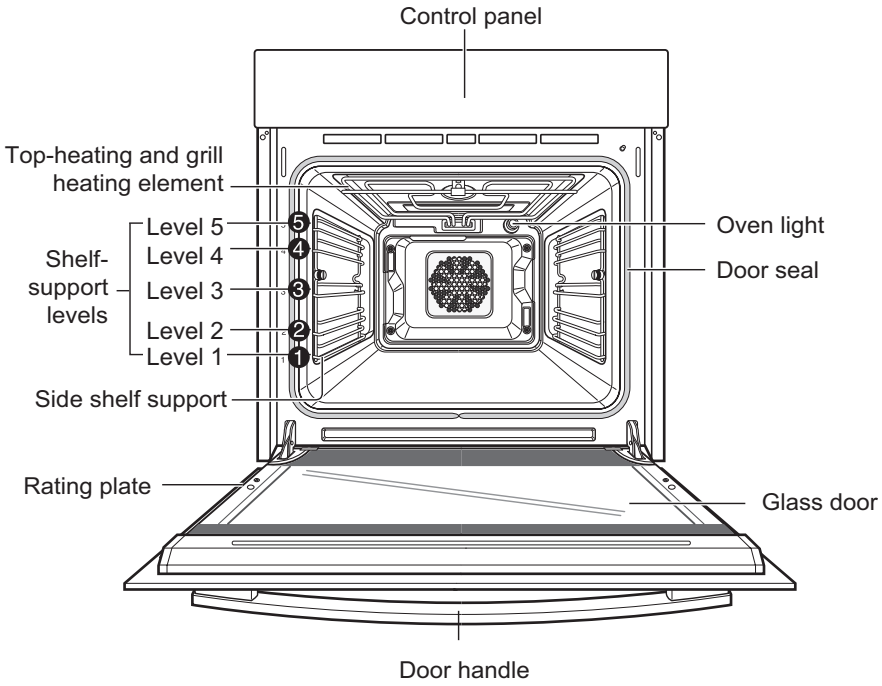

Oven levels are numbered from the bottom up.
The 4 and 5 levels are mainly used for grill functions.

The cooking tables throughout this operating instructions give you suggested oven level (shelf positions), however you can change these to suit yourself.

Control Panel

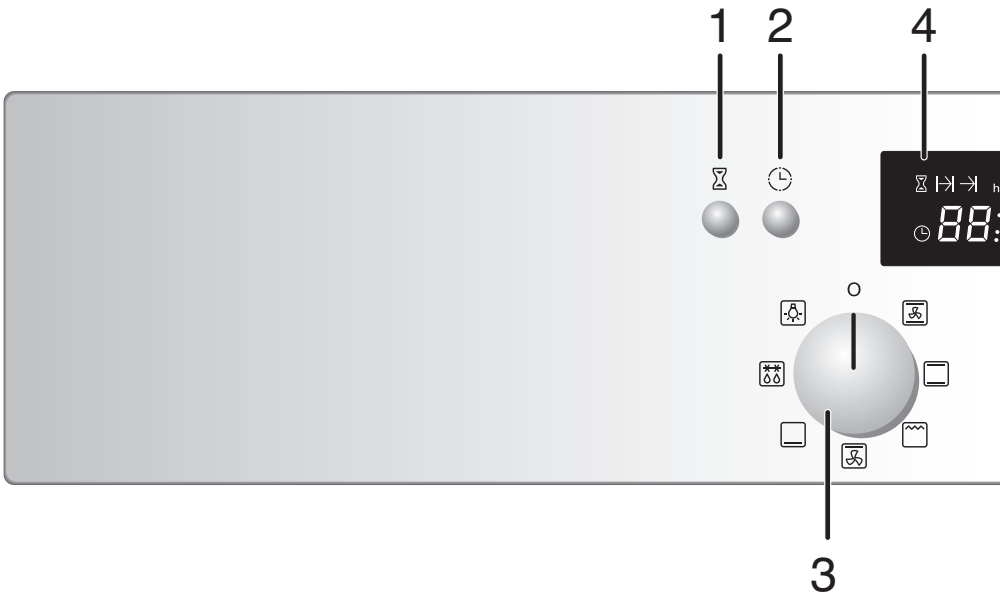

1. Timer button
2. Clock button
3. Operating mode knob
4. Time display

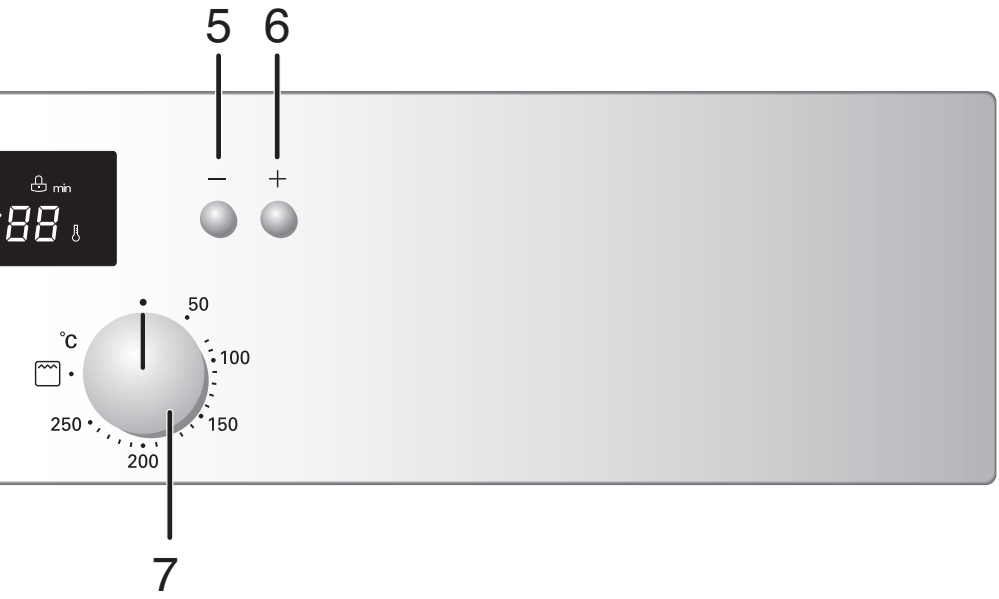

5. Less button
6. More button
7. Temperature knob

Accessories

Wire grill

For dishes, baking tins, grilling and roasting tins.

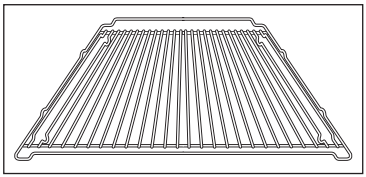

Deep pan

For cakes and biscuits, for roasting and for catching roasting juices or fat.

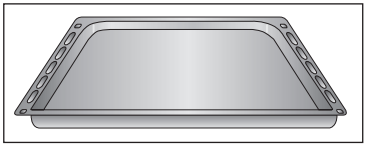

Hints on using the trays and shelves

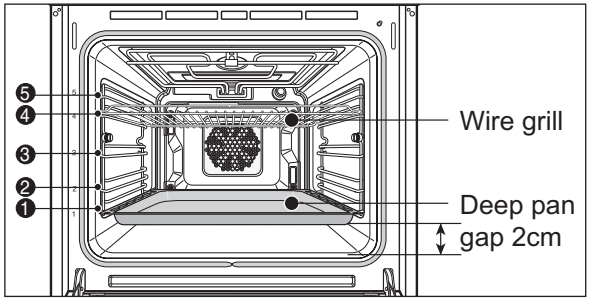

Ensure that the trays and shelves are properly fitted into the two side shelf supports. Take particular care when removing finished dishes and meals from the oven! Use suitable cloth pot holder or oven gloves. If you are using the wire grill in combination with the deep pan or some other tray to catch dripping liquids or fat, then do not put the trays down on the oven floor, but slide them into the shelf supports as well. If you place trays on the oven floor, the resulting build-up of heat can damage the surface of the oven. For this reason, there must always be a minimum gap of 2 cm between the accessories and the oven floor. With wire grill, always ensure that they are properly in position in the shelf supports.

Fitting the wire grill and trays

Slide the tray or shelf in at the desired level.

The shelf support levels are numbered from the bottom up to the top.

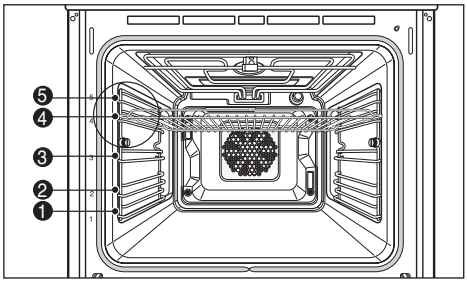

Telescopic slides (special accessory)

Installation

The telescopic slides are installed as follows:

1. Put the inserting bar of the telescopic slide into the hole.

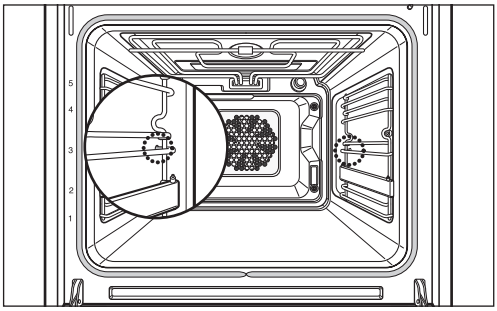

2. Align the front recess with the front screw hole. Turn a screw in and tighten both screws. Repeat the procedure for the second telescopic slide arm.

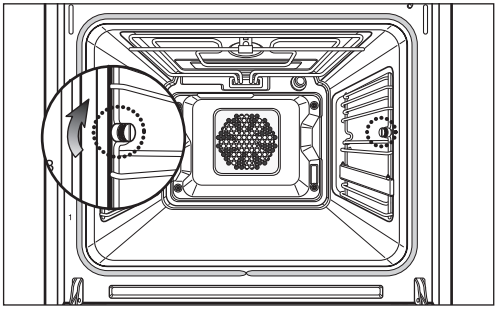

3. Trays and shelves must be placed on the telescopic slide arms with care so as to avoid any accidental tipping over. To prevent this, place trays and shelves on the telescopic slide arms as shown in the illustration below, so that the securing pins on the slide arm catch the tray or shelf to prevent any slipping.

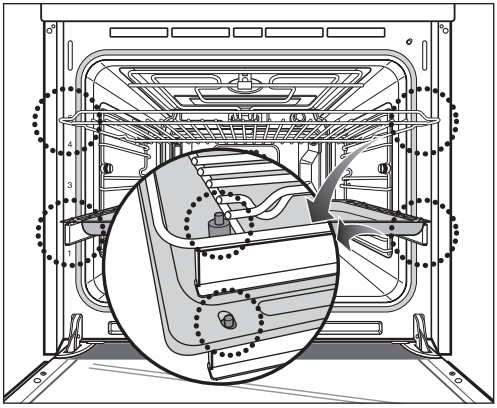

Before initial use

Setting the time of day

The oven cannot be used until the time of day is set.

When the appliance is connected for the first time or after a power failure, the time display flashes at "12:00".

Example: to set the current time of day to 13:30.

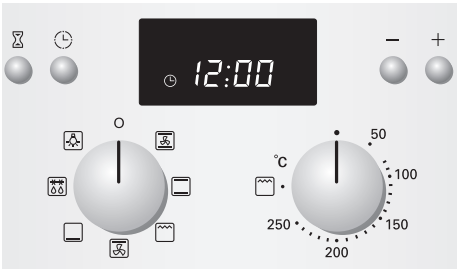

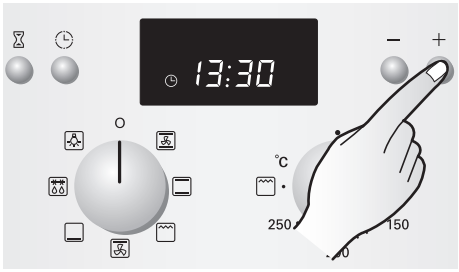

1 The time display flashes at “12:00” and the egg timer symbol will blink.

2 Press the button(– / +) to change the clock time (13:30, in the example). The time will be set after 4 seconds.

Initial cleaning

Clean the oven carefully before putting it into use.

Important: Do not use any caustic or abrasive cleaners. These can damage the oven surfaces.

Appliance front

Ovens with a metal front must be cleaned with standard detergents only. Wipe the front of the appliance with a slightly damp cloth.

Oven interior

1. Open the oven door.
2. Clean all baking trays, accessories and the side shelf supports with warm water and dishwashing liquid.
3. Clean the oven interior in the same way, using warm water and dishwashing liquid.
4. Allow the oven to dry.

Heating up

Before baking or roasting, heat up the oven, the first time it is switched on an unpleasant smell may arise.

Open the windows and ensure there is adequate ventilation during this procedure.

1. Ensure that the time of day is set correctly.
2. Remove all accessories from the oven.
3. Use the knob to select the operating mode: 3D Hot Air() or Convection grill() at 200°C (see next page).
4. Leave the oven on in this operating mode for one hour.

Using the oven

Operating modes

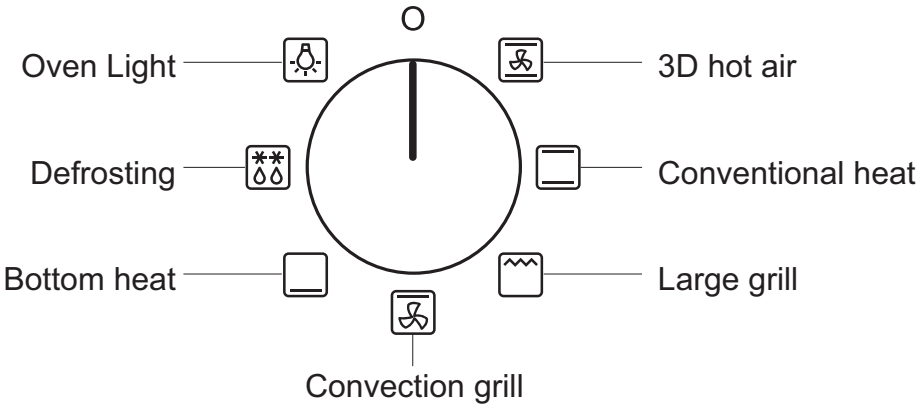

Description of operating modes

The individual operating modes differ in that they involve a combination of different heating elements. The various combinations are suitable for producing a variety of heated areas and Convection circulation paths in the oven, as required for the optimum preparation of various dishes.

When using the grill function( ), dial the temperature knob by on the grill mark.

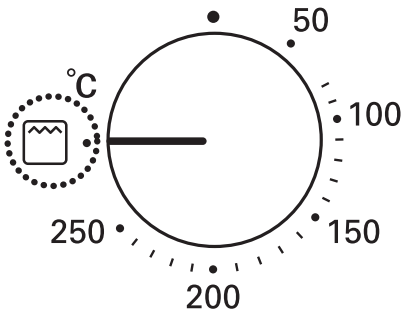

Conventional heat

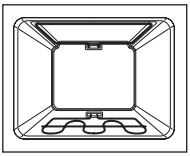

For conventional heat, the heating elements above and below the baking chamber are used. This operating mode is suitable for baking cakes, baking with a short baking time.
The recommended temperature is 190°C.

3D hot air

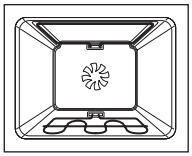

In addition to the conventional heat elements, 3D hot air mode uses the hot-air fan in the back wall. This means that the roasting and baking temperature can be reduced by 20-40°C. The recommended temperature is 150°C. This mode is suitable for cakes and biscuits, as it is possible to bake on more than one level at the same time.

Convection grill

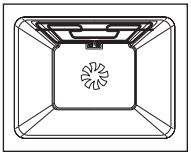

In this mode, the grill heating elements are used with the hot-air fan. The recommended temperature is 190°C. This function is suitable for pizzas.

Bottom heat

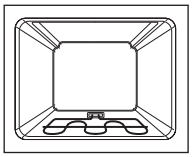

In bottom heat mode, only the heating element in the oven floor is used. The recommended temperature is 170°C. This function is particularly suitable for finishing off cakes or pizzas supposed to have a crispy base, on one of the shelf support levels.

Using the oven

Large grill

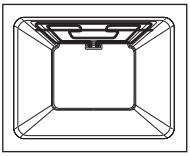

The large grill( ) uses the entire heating element. When using this function, dial the temperature knob by on the grill mark( ). The large grill ( ) is suitable for cooking cutlets, fish or making toast, and when cooking larger quantities for browning or with a gratin topping.

Defrosting

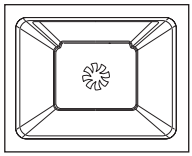

In defrosting mode, the fan is used without heating. The circulating air speeds up the defrosting process. Place the frozen food in a suitable container to trap the liquid produced during defrosting. Where appropriate, you can use the wire grill and the deep pan to avoid soiling the oven. If water is allowed to run out into the oven, the door seals will be contaminated and an unpleasant odour may result.

Switching the oven on

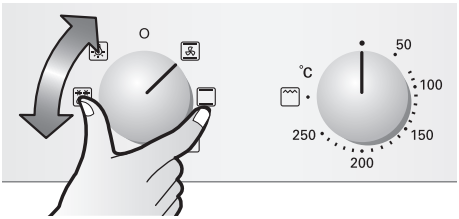

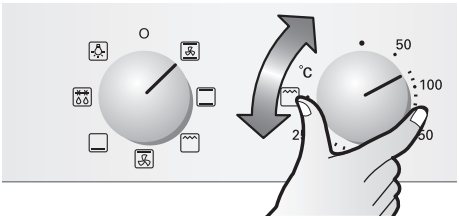

1 Select the desired mode with the Operating mode knob.

2 Select the desired oven temperature.

3 After setting the oven temperature, the oven will start immediately.

Using the oven

Switching the oven off

Set the Operating mode knob to "O" to switch the oven off.



Oven fan

When the oven is switched on, the fan is automatically activated to cool the oven surfaces. When the oven is switched off, the fan is also switched off.

Thermal cut-out

If the oven overheat, the power supply to the heating elements is switched off for a period of time so as to avoid any damage to the appliance.

Baking dishes

When using baking dishes, always ensure that the dish is suitable for use at the temperature inside the oven. The oven can operate at up to 250°C. Refer to the instructions provided by the manufacturer of the dish.

Clock functions and symbols

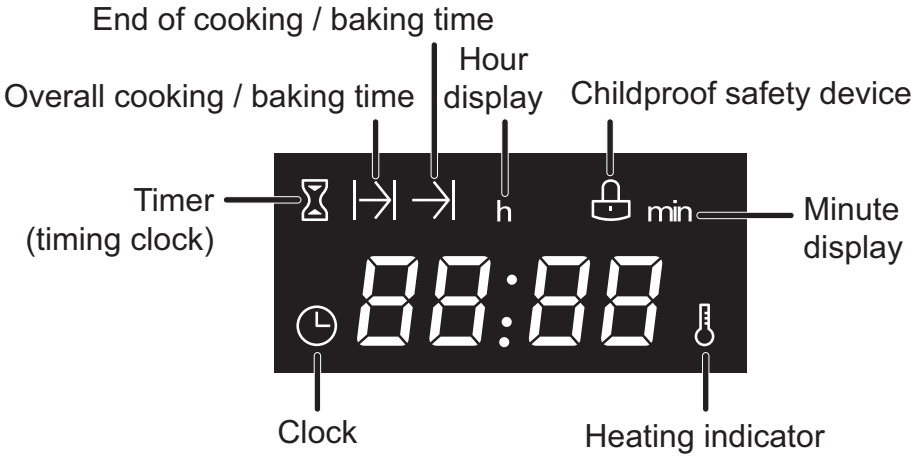

Timer

Lights up when the function timer is activated (e.g. like a minute minder when boiling eggs).

Overall cooking time

Lights up when the overall cooking time is being set or displayed. The oven switches off automatically after the cooking time set has expired.

End of cooking time

Lights up when the point in time set for the end of the cooking / baking time is set or displayed. The oven switches off automatically at the stipulated time.

Heating indicator

This indicator is turned on only if one or more heating elements are working on.

Clock

Lights up when the time is being set, changed or displayed.

Using the oven

Setting the timers

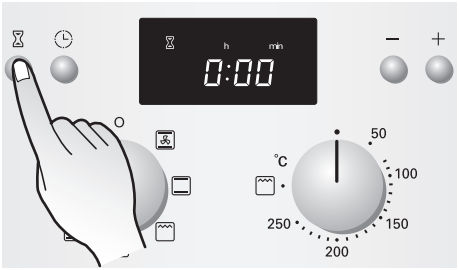

1 Press the timer(⧖) button.

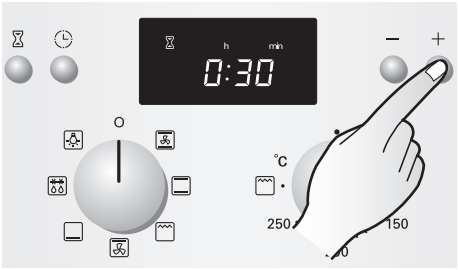

2 Set the desire time with the More/Less(–/+) buttons. (30min. in the example)

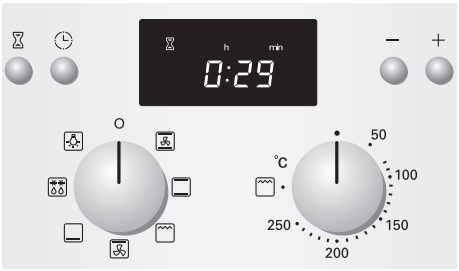

3 After 4 seconds, the time will be set. And you will hear a signal tone.

*** Switching off the signal tone**

Press any button once to cancel the signal tone.

Programming the overall cooking / baking time

The oven switches off automatically at the end of the period of time entered.

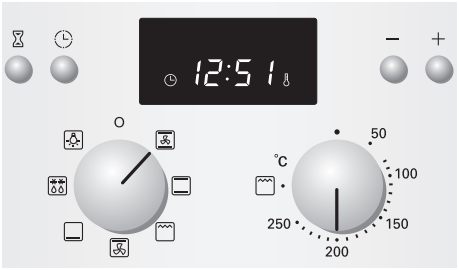

1 Select the desired operating mode and temperature.

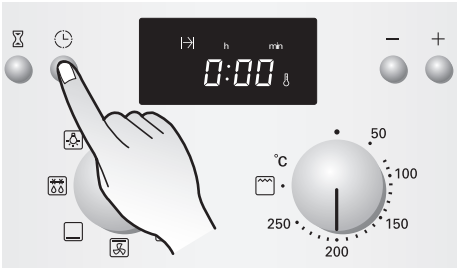

2 Press the Clock button( ) once.

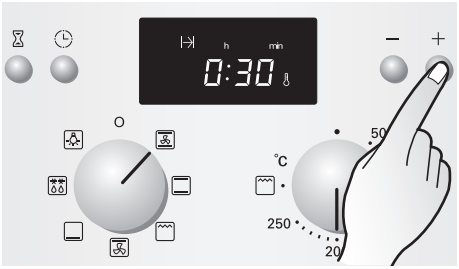

3 Set the desired overall cooking/baking time with the More/Less(–/+) buttons. (30min. in the example)

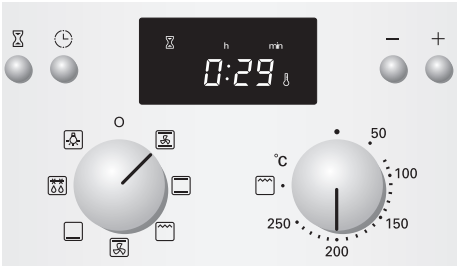

4 After 4 seconds, the time will be set. And you will hear a signal tone.
Once this time has expired you will hear a beep sound, and the oven will switch off automatically.
Press any button once to cancel the audible sound.

Using the oven

Programming the end of cooking / baking time

The oven switches off automatically at the time entered.

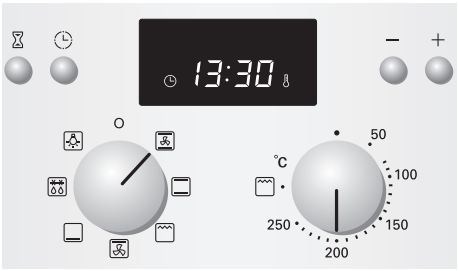

1 Select the desired operating mode and temperature.

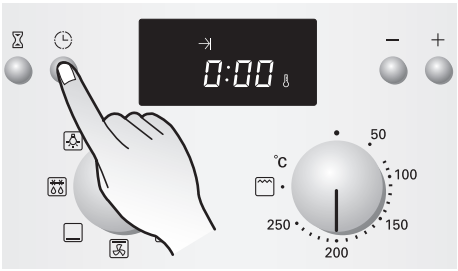

2 Press the Clock button( ) twice.

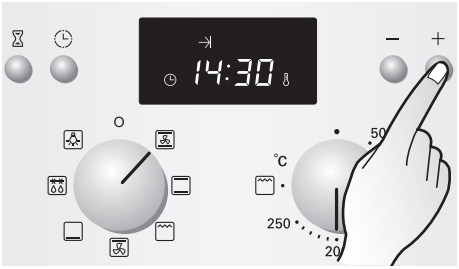

3 Set the desired end of cooking/baking time with the More/Less buttons.
(In the example, the current time is 13:30 and the dish is to be finished at 14:30)

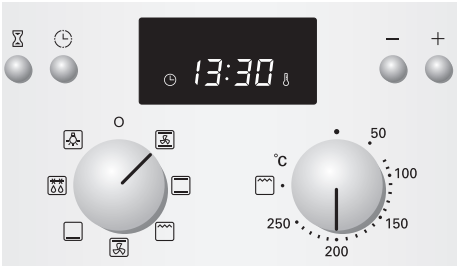

4 After 4 seconds, the time will be set. And you will hear a signal tone.
Once this time has expired you will hear a beep sound, and the oven will switch off automatically.
Press any button once to cancel the audible sound.

Combining overall cooking / baking time and end of cooking / baking time

The overall and end of cooking time programmes can be combined to permit the oven to be switched on and off automatically.

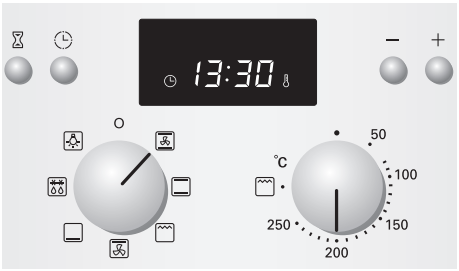

1 Select the desired operating mode and temperature.

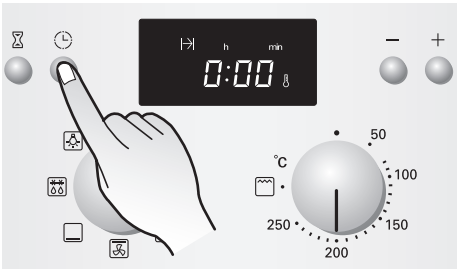

2 Press the Clock button( ) once.

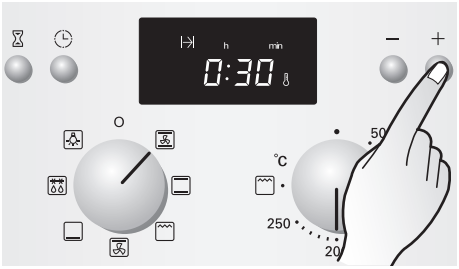

3 Set the desired overall cooking/baking time with the More/Less(–/+) buttons. (30min. in the example)

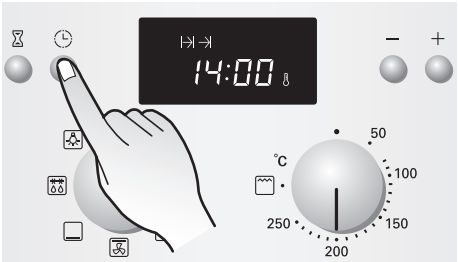

4 Now press the Clock button once to set the end of cooking before starting.

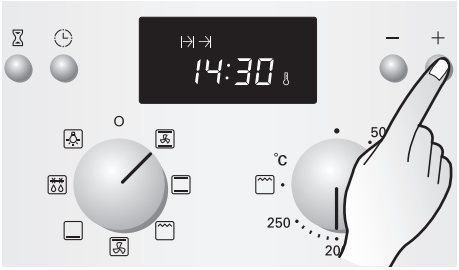

5 Set the desired end of cooking/baking time with the More/Less(–/+) buttons. (14:30, in the example)

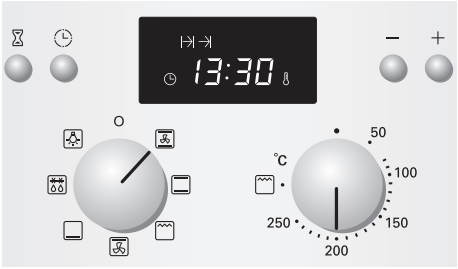

6 After 4 seconds, the time will be set. And you will hear a signal tone.
30 minutes before the end of cooking/baking time, the oven switches on automatically, at 14:00 in the example shown.
Once this time has expired you will hear a beep sound, and the oven will switch off automatically.
Press any button once to cancel the audible sound.

Setting the time of day

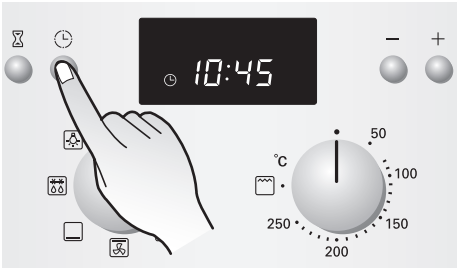

1 Press the Clock button( ) 3 times.

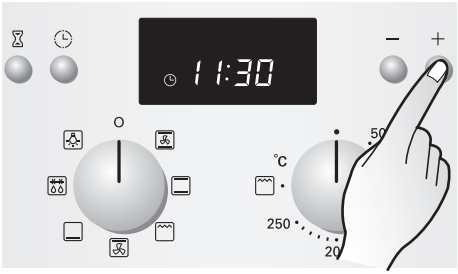

2 Set the current time with the More/Less(–/+) buttons. (11:30, in the example)

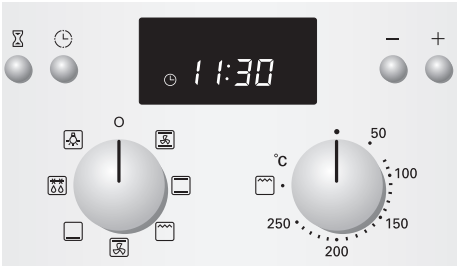

3 After 4 seconds, the time will be set. And you will hear a signal tone.

Using the oven

Childproof safety device

The childproof safety device prevents the oven from being switched unintentionally.

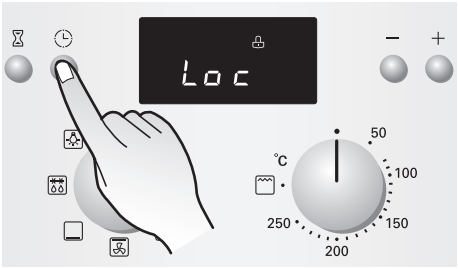

1. Press the Clock button ( ). Hold it down for 4 seconds until the lock symbol( ) appears in the display. The childproof safety device is now activated.

2. To switch off the childproof safety device, press the Clock button ( ) until the lock symbol( ) is no longer displayed. The childproof safety device is now deactivated and the oven is ready for use.

Baking

General information

When baking, use the 3D hot air( ) or conventional heat( ) modes.

Baking tins

- When baking in conventional heat( ) modes, use baking tins with a dark metal or coated surface.
- When baking with 3D hot air( ), you can also use baking tins with a bright metal surface.
- Always place baking trays in the oven with the flat side to the front.
- Always place cake tins in the middle of the tray or shelf.
- When baking with 3D hot air( ) or conventional heat( ), you can place two baking tins side by side in the oven. This means that the baking time is only slightly longer.

Shelf levels

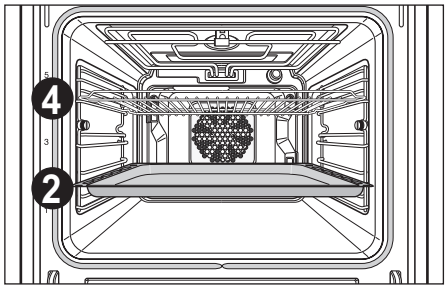

The shelf levels are numbered from the bottom up.

When cooking on multi-levels at the same time, accessories are properly fitted in the correct levels as below

Level 2 : Deep pan

Level 4 : Wire grill

(If you have a similar-sized tray)

Level 2 : Similar-sized tray

Level 4 : Deep pan

Baking

Baking tips

Results of baking	Possible cause	Solution11
The cake base is too light	Wrong shelf level	Use a dark baking tin or put the cake one level lower down.
Cake collapses (turns lumpy, soggy)	Oven temperature too high	Set the temperature slightly lower.
	Baking time too short	Set a longer baking time. **The baking time cannot be reduced by setting a higher temperature.**
	Mixture contains too much liquid	Use less liquid. Follow instructions for dough mixing times, especially when using kitchen appliances.
Cakes are too dry	Oven temperature too low	Next time set a slightly higher temperature.
	Baking time too long	Set a slightly shorter baking time.
Cakes are browned unevenly	Baking temperature too high and baking time too short	Set a slightly lower baking temperature and a slightly higher baking time.
	Mixture unevenly distributed	Distribute the mixture evenly over the baking tray/tin.
Baking time too long	Temperature too low	Next time set a slightly higher temperature.

Roasting

When roasting, use the convection grill( ), conventional heat( ) modes.

TIP:

- Use heat resistant dishes when roasting (follow manufacturer's instructions).
- Stainless steel roasting pans are only of limited use, as they reflect the heat to a very large extent.
- When using dishes with plastic handles, ensure that the handles are heat resistant (follow manufacturer's instructions).
- Large items for roasting or a number of items can be placed directly on the deep pan or on the shelf above the deep pan (e.g. 3~4 chickens).

TIP:

- Clean the oven as soon as possible after use if you are roasting in an open-topped tin. It is easier to remove fat splashes when the oven is still warm.

⚠ WARNING

Allow the oven to cool down enough to ensure there is no risk of burning yourself.

- For fish, use conventional heat. For kinds of chicken we recommend convection grill( ) mode.
- Add a little liquid to prevent roasting juices or fat from getting burned on.

TIP: For better roasting results, baste poultry with their own juices a number of times during the roasting process.
Switch off the oven 10 minutes before the end of cooking time. Make use of the residual heat available.

Grilling

For grilling, you have a choice of 2 different operating modes.

Large grill

For larger quantities of flat food for grilling, and for top-baking in large tins. Choose 1 of 3 power levels (1 low, 2 medium and 3 high), as suitable for the food being grilled.

Convection grill

For grilling larges pieces of poultry, such as large chicken.

When grilling, the oven door must be kept closed at all times.
As a basic principle, the oven should be preheated for 3 minutes!

Grilling dishes

Use the wire grill or the deep pan for grilling. Use the shelf for making toast. To catch dripping liquids, slide the deep pan in at Level 1 or 2.

Shelf levels

Use Levels 4 or 5 for grilling flat pieces of fish or chicken. Warning note: exposed parts of the oven can become hot during grilling. Keep children at a distance. (Insert with corresponding programme, as appropriate.)

Using the grilling table

The grilling times are intended as approximate values only. The actual times may vary depending on the quality of the actual fish or chicken.

Grilling is particularly suitable for cooking flat pieces of fish or chicken.

Turn the grilled food over about halfway through the cooking time.

Grilling table

Food for grilling	Shelf level	Grilling time	
		1st side	2nd side
Toast[1]	3	2–3 mins.	2–3 mins.
Toast with topping	3	6–8 mins.	–

1) Shelf or deep pan

Always count the shelf levels from the bottom up!

Defrosting

Use the "Defrosting(❄)" operating mode to defrost food.

Defrosting dishes

- Remove the dish from its packaging, put it on a plate and place the plate on the shelf.
- Do not cover the dish with a plate or bowl, as this can considerably extend the defrosting time.
- Do not use the liquid produced during defrosting for cooking the dish to avoid the risk of salmonella. Ensure that the liquid produced during defrosting is free to run off the food.

Shelf levels

- For defrosting, use the shelf on Level 1, or Level 2 for larger dishes.

Defrosting table

The following table contains reference values for defrosting.

Dish	Defrosting time (mins.)	Time for heating up (mins.)	Comments
Chicken, 1000 g	100–140	20–30	Use the shelf with the deep pan. Turn the chicken after half of the time or cover with tin foil.

Cleaning and care

⚠ WARNING

Switch the oven off before cleaning and allow to cool.

Outside

Wipe the front of the appliance with a soft cloth using a mild detergent.

- Do not use any caustic or abrasive cleaning materials.
- For aluminium front panels use a mild window cleaner and for stainless steel front panels use the corresponding cleaner for stainless steel.

Oven interior

NB!

Clean the appliance after use, as soon as it has cooled down. This makes it easier to remove any deposits and they cannot get burnt on.

- Switch the oven light on.
- Wipe down the oven with water and dishwashing liquid. Allow to dry. Do not use any abrasive cleaners.
- Remove persistent deposits with a special oven cleaning product.

Important: When using a spray-on cleaner, it is essential to follow the manufacturer's instructions!

Do not clean the door seal by hand.

Accessories

Clean the accessories (shelves, shelf supports, etc.) after use and allow to dry fully. If necessary, treat in advance to soften deposits.

Cleaning and care

Shelf supports

The shelf supports on the left and right-hand side walls of the oven can be removed for cleaning.

Detaching side runners

1. Remove the screw holding each of the shelf supports in place.

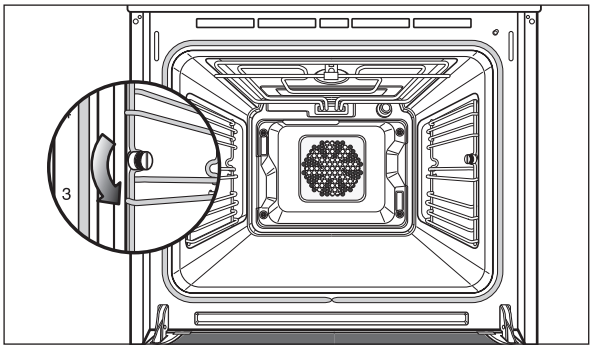

2. Take out the shelf supports.

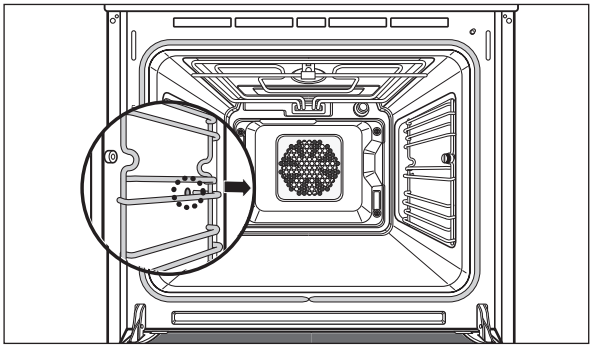

To replace, proceed as follows:

1. Put the inserting bar of the shelf support into the hole.

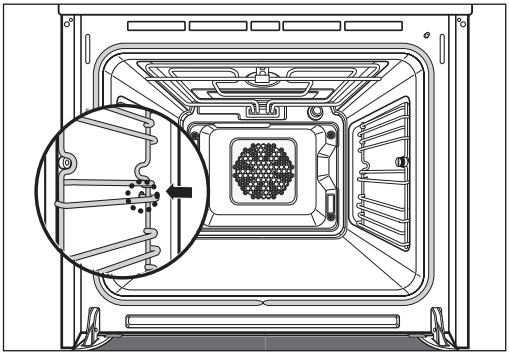

2. Slip the recesses in the shelf supports over the screw heads. Tighten the screws fully.

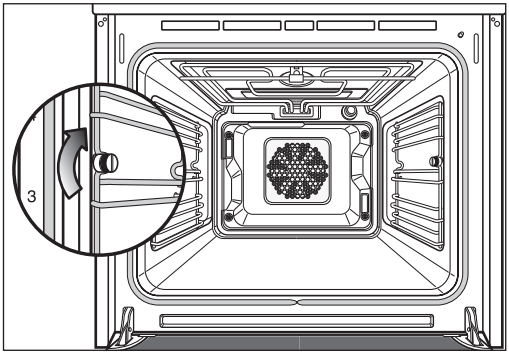

Oven light

Risk of electric shock!

The oven lamps sockets are live:

• Switch the oven off before replacing lamps.

To protect the lamps and glass covers, a soft cloth should be placed on the oven floor.

Replacing the oven light

1. Unscrew the lamp cover by turning anti-clockwise.
2. Replace the lamp (Type E14, 230V, 25 Watts, heatproof to 300°C)

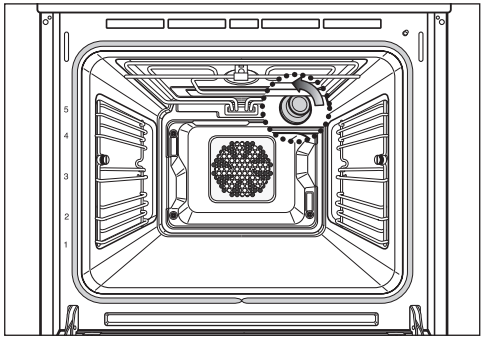

* Receive the lamp with the customer service or with the specialized trade.

Oven Door

The oven door can be removed for cleaning.

Removing the oven door

1. Open the oven door fully. Insert the locking pins into the openings on both hinges (locking pins included with accessories).

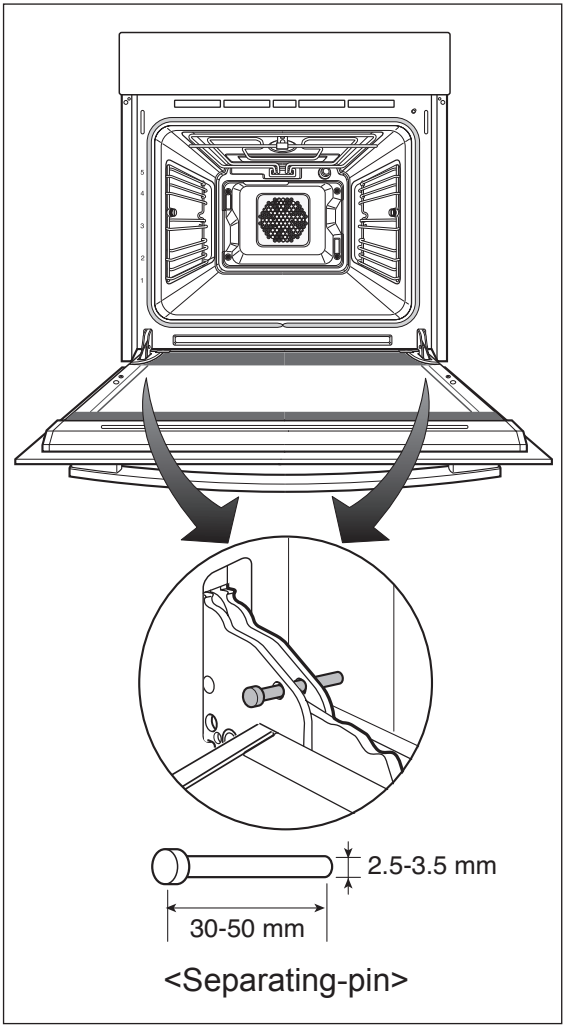

<Separating-pin>

Oven Door

2. Grip the oven door at the middle of the two sides.

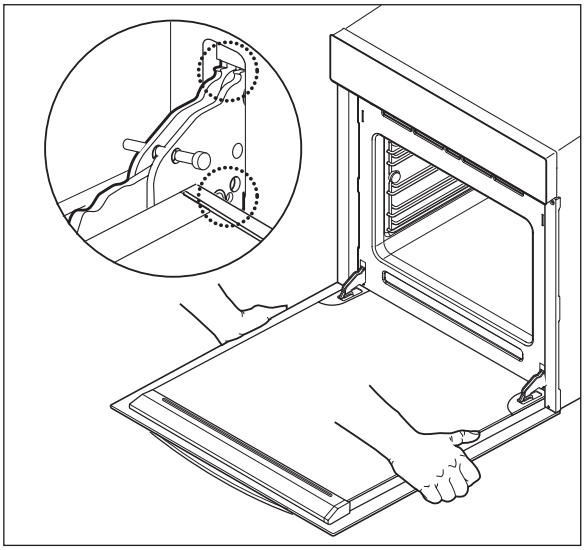

3. Turn the door roughly 15 degrees upwards and lift the area of the hinges by roughly 2 mm vertically.

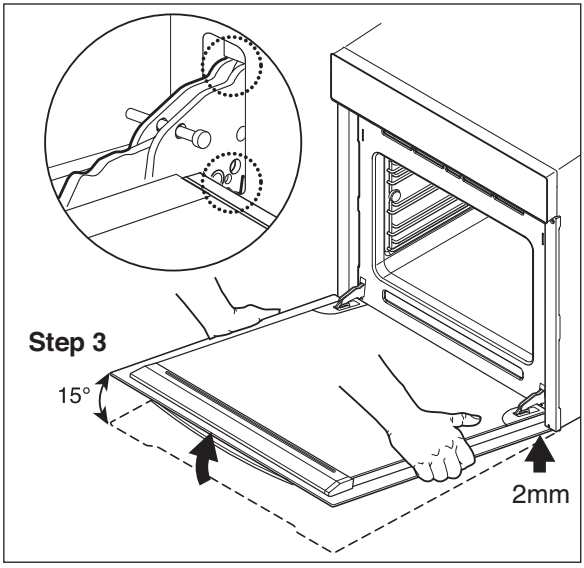

4. Now turn the door through roughly 80 degrees until the hinges are completely out of the openings. Place the door with its outside down on a soft, smooth surface, e.g. a blanket, in order to avoid any scratching.

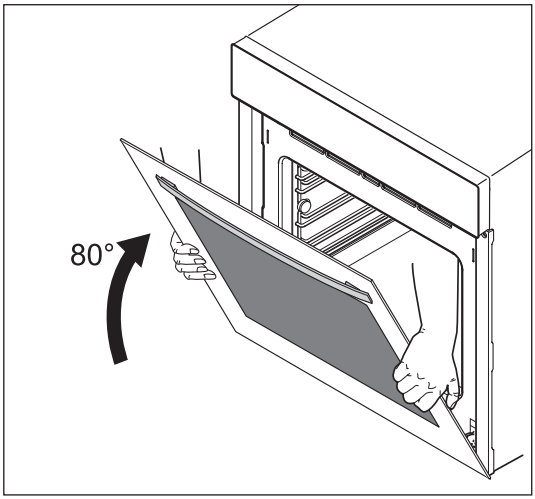

⚠ Warning:

For reasons of safety, the locking pins must not be removed from the door hinges when the door is off.

Tip:

If the locking pins have gone missing, you can use a suitable metal rod or a nail.

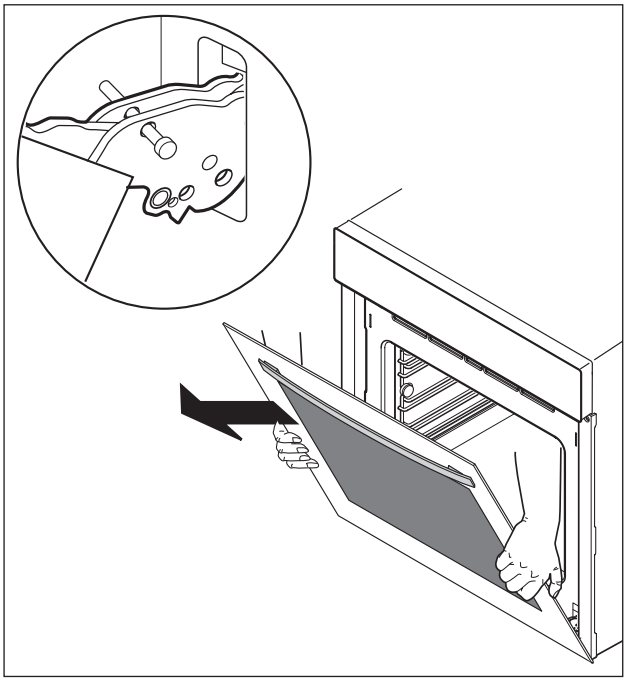

Oven Door

Rehanging the oven door

The locking pins must be in place in the hinges.

1. Grip the door with both hands, placing each in the middle at the sides.
2. Position the door hinges until they are fully seated in the hinge openings. 1
3. Turn the door on the horizontal plane and remove the locking pins from the hinges. 2
4. Close the oven door.

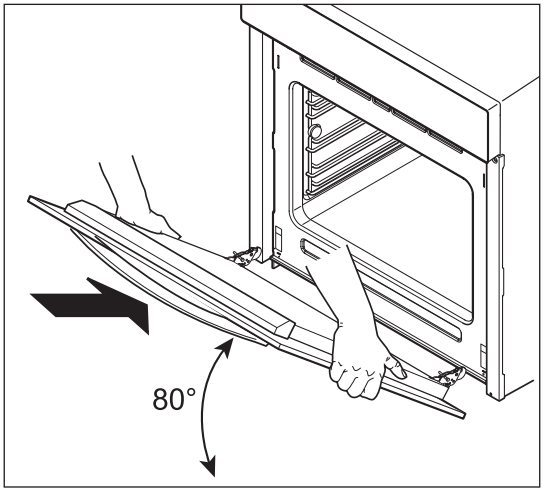

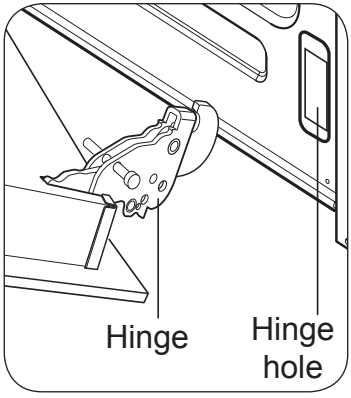

* Do not remove the separating pins until the door has been placed back into its position securely.

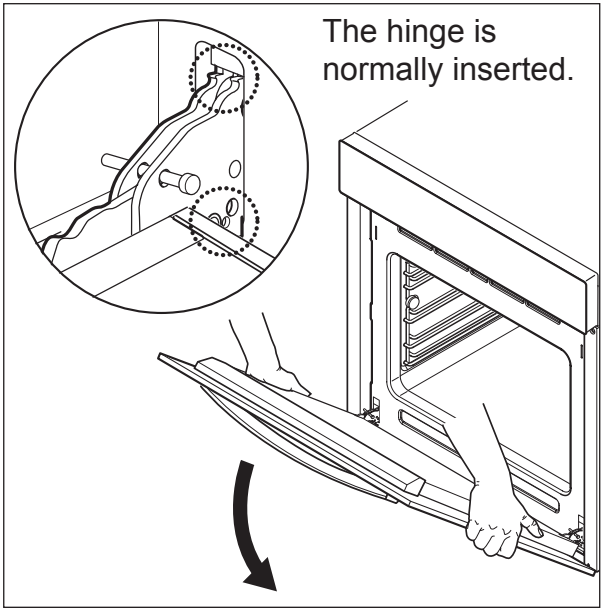

The procedures of disassembling the door for cleaning

⚠ **Warning:** Remove the glass panels **only with the oven door removed from its hinges!**
If the door is in place, it can spring up due to the loss of weight, resulting in injury. (Do not remove the locking pins from the hinges!)

NB! If any force is applied – especially at the edges of the front glass panel – the glass may break. Place the oven door on a soft, smooth surface with the handle facing down.

1. Remove the two screws at the right and left-hand side of the door.
2. Remove the two plastic side brackets. Remove the top metal cover above the glass door panels. Undo the two screws securing the door handle.

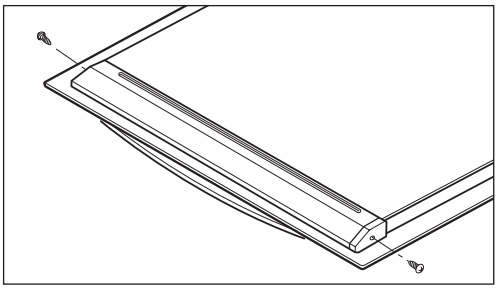

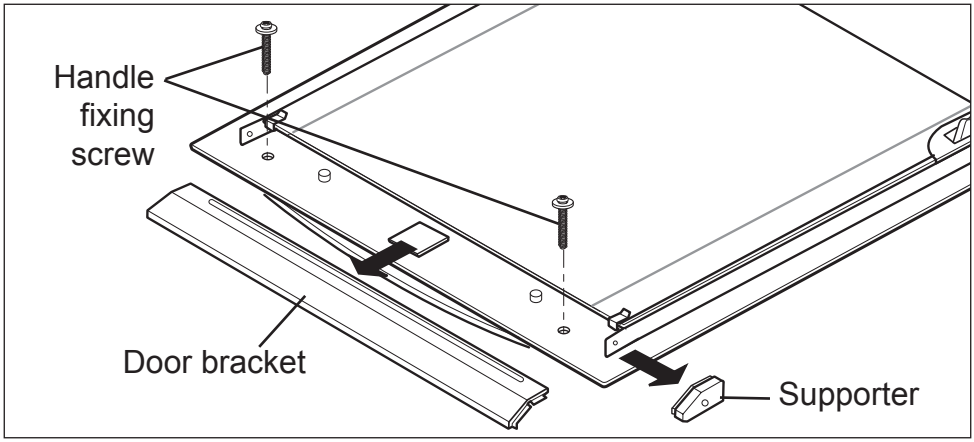

Oven Door

3. The innermost glass door panel can now be removed.

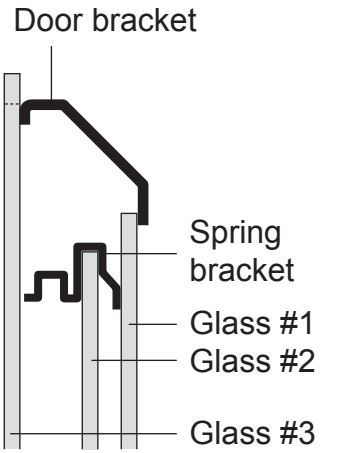

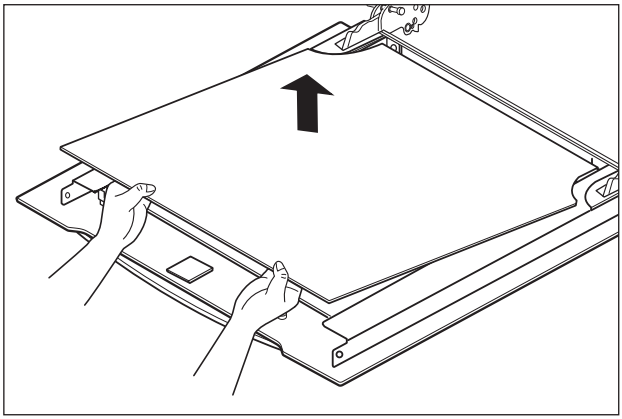

Note: Clean the glasses with warm water or washing-up liquid and polish dry with a soft clean cloth.

4. Remove the two spring-loaded catches from panels 2.

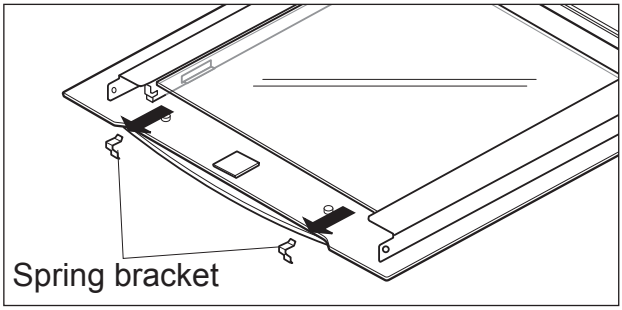

5. Panels 2 can now be removed.

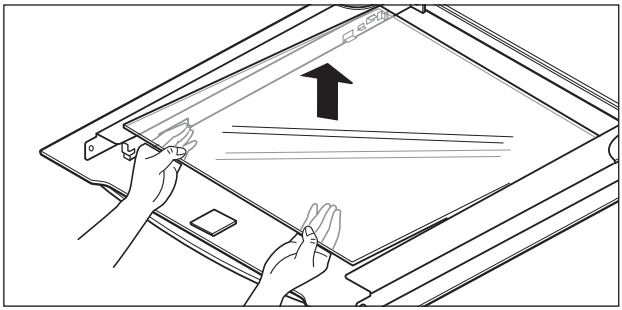

Cleaning the glass panels

Clean the glass panels with a mild detergent.
Do not use harsh abrasive cleaners or sharp metal scrapers to clean the oven door glass since they can scratch the surface, which may result in shattering of the glass.

The procedures of assembling the door

1. Attach the glass, door bracket and supporters to the door.
   Note: When the door bracket is assembled, make sure that the middle area of it should be inserted into the slit properly

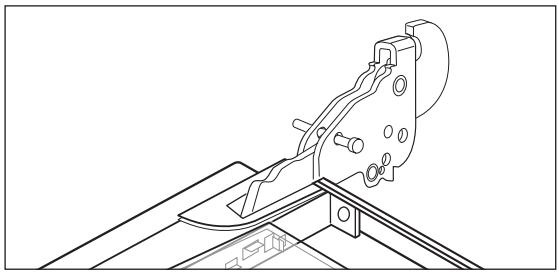

2. Secure the two screws on the both door sides.

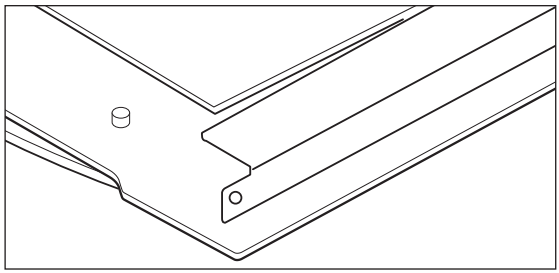

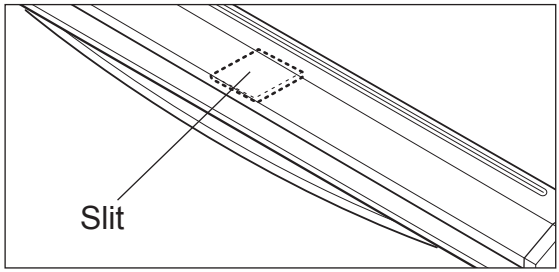

Troubleshooting

Fault	Possible cause	Solution
Oven does not heat up.	Oven not switched on.	Switch oven on.
	Clock not set.	Set clock (refer to section "Before initial use").
	The necessary settings have not been selected.	Check settings.
	Fault in the mains power supply. The protective electrical system or the fuses have been tripped.	Check out fuses and the protective system. If the fault recurs, consult a qualified electrician.
Oven does not heat up even after function and temperature are set.	An automatic programme has been activated, to be started at a later point in time.	Cancel the automatic programme or reset it.
Time display in the electronic clock flashes.	There has been a power failure.	Reset the clock (refer to section "Before initial use").
Oven light not working.	Bulb is faulty.	Replace the bulb (refer to section "Oven Light").

If the fault cannot be rectified by the above measures, contact your local Customer Service Centre.

NB! If faulty, the appliance must not be used. If a fault occurs, the appliance must be isolated by removing the mains plug or switched off by removing the fuse.

The appliance must only be repaired by **a specially trained and qualified electrical professional only.** Repairs carried out improperly may result in considerable damage.

In the event of a fault, the repair carried out by a Customer Service technician or the specialist dealer may be subject to charges, even during the guarantee period.

Caution! Repairs to the appliance must be carried out by a **specially licensed technician** only! Considerable danger may result from incorrect repairs.

Caution! Do not use the appliance if damaged. In the event of a fault or failure, switch off at the mains. In the event of a fault, visits by technicians from Customer Service or dealer may not be covered by guarantee, even during the warranty period, if the cause of failure is the result of abnormal customer use.

Technical specifications

Mains connection	220-240 V~ 50 Hz
MAX power consumption	2850 Watts

Oven interior dimensions

Height x width x depth	30.0 x 42.4 x 41.6 cm
Volume (useful capacity)	55 L
Output Power	2850W

Regulations, standards and directives

The appliance complies with the following standards:

- EN 60 335–1 and EN 60 335–2–6 (Safety of electrical appliances for use in the domestic household and for similar purposes).
- EN 60 350 or DIN 44546 / 44547 / 44548 (Operating characteristics of electrical domestic cooking appliances, hot plates, ovens and grills).
- EN 55014–2 / VDE 0875 Part 14–2
- EN 55014 / VDE 0875 Part 14 / 1999–10
- EN 61000–3–2 / VDE 0838 Part 2
- EN 61000–3–3 / VDE 0838 Part 3 (Basic requirements in relation to electro-magnetic interference (EMI))

The appliance complies with the following EU directives:

- 73/23/EEC issued 19.02.1973 (Low voltage), including supplement 90/683/EEC
- 89/336/EEC issued 03.05.1989 (EMI), including supplement 92/31/EEC
- 93/68/EWG (Identification marking)

The appliance complies with the IS694 standard.

Installation instructions

Important: installation should be undertaken by a qualified professional electrician only.

The oven must be installed in compliance with the manufacturer's instructions.

Safety instructions for the installer

- During installation, ensure that no persons can come into contact with live components.
- The housing in which the oven is installed must comply with the stability requirements of the DIN 68930 standard.
- The oven must be installed by a qualified professional electrician, in accordance with the corresponding regulations and standards.
- The oven is a heavy appliance and must be transported with great care.
- Before initial use, remove all packaging, both external and from inside the appliance.
- No modification may be made to the oven's technical characteristics.
- The integrated cooking area or hotplates is/are provided with special connections. These may only be attached to the appropriate corresponding connections of the same type.

Customer service & spare parts

If you require spare parts or a technician, contact your local LG Customer Service Centre.

Your call will be automatically passed on to the Customer Service Centre responsible for your post code area. You can find the address of your local Customer Service Centre
Please ensure you have the following details to hand:

1. Your name and address, including your post code.
2. Your telephone number.
3. Exact details of the nature of the problem.
4. The model, series and production number. These details are found on the rating plate located at the right-hand inner edge of the oven door.
5. Your dated receipt of purchase. Please note that proof of purchase is required for any guarantee claim. Before submitting a guarantee claim, please ensure that you have read through the section on "Troubleshooting". There will be a charge for any inspection carried out by a technician if it should transpire that there is no mechanical or electrical fault present in the appliance.

Customer Service

For general queries on LG appliances or further details of LG products, please contact our Customer Service Centre.

WARRANTY CARD

Built In Oven

This warranty card is valid only for product
Sold by LG Electronics in Indian Market

www.lg.com/in

PURCHASER INFORMATION

PURCHASER'S NAME

ADDRESS

CITY STATE

PINCODE

MODEL NO

SERIAL NO

DATE OF PURCHASE

INVOICE NO

DEALER STAMP

STAMP

DEALER INFORMATION

PURCHASER'S NAME

ADDRESS

CITY STATE

PINCODE

LG INDIA ELECTRONICS PVT LTD UNDERTAKES BY THIS WARRANTY

PURCHASER INFORMATION

Should your LG product fail due to a defect in material or workmanship under normal home use during the warranty period set forth below, Company will at it auction repair or replace the product upon receipt of proof of original retail purchase.

This warranty is Valid only to the Original retail purchaser of the product and applies only to a product sold in India by company authorized dealer.

WARRANTY PERIOD

The LG Built In Oven comes with 1 year warranty, from the date of purchase that comprises of a 1 year warranty on all parts except plastic part, glass, glass part, bulb & consumables from the date of purchase of the product, provided always that the warranty card bears the rubber stamp, date and signature of our Authorized Dealer.

*Note : If the Original date of purchase cannot be verified from the proof of purchase, the warranty will begin after 3 months of manufacturing month which shall be verified from the serial no./bar code label on the product.

WHAT THIS WARRANTY COVERS

LG Electronics India Pvt. Ltd. (LGEIL/the Company) offers you a limited warranty ,for the products sold within the territories of India , that the product will be free from defects in material and workmanship, according to the following terms and conditions.

1. Repairs under warranty shall be carried out by an authorized service personnel only. The details of centralized help lines are as overleaf.
2. In case of repairs or replacement of any part/s of the unit, this warranty will thereafter continue and remain in force only for the unexpired period of the warranty. Replacement of parts would be purely at the discretion of LGEIL alone. In case the replacement of the entire unit is being made, (subject to the sole discretion of LGEIL), the same model shall be replaced and in the event such model has been discontinued, it shall be replaced with the model equivalent as deemed by LGEIL.
3. In event of repair LGEIL shall endeavor to use new parts however in any case fresh parts are not available then LGEIL will have every right to use refurbished parts. The warranty on replacement model / Refurbished part shall remain in force only for the unexpired period of the warranty based on original purchase.
4. The company or its Authorized Service Center reserves the right to retain any part/s or component replaced at its discretion, in the event of a defect being noticed in the equipment during warranty period.
5. If any colored internal or external components are replaced, there will be commitment to ensure that the shades match with the original or other components. The replaced shades, patterns, tints may vary from the customer's unit due to continuous usage of the unit. Any matching components changed at customer's request will be on chargeable basis except the component which actually needed.
7. This warranty will automatically terminate on the expiry of the warranty period as specified above, even if LG product may not be in use for any time during the warranty period for any reason.
8. In case of any unpredicted situation and spares not being available, LG's prevailing depreciation policy (subject to the sole discretion of LGEIL & could be change without prior notice) will be applied on the product as a solution.
9. Only courts in state of Delhi and places where LGEIL has its branch office shall have the jurisdiction for settling any claims, disputes arising under the warranty.

WHAT THIS WARRANTY DOES NOT COVER

1. Visiting charges of the service engineer for units installed beyond municipal limits of the jurisdiction of company's Authorized Service Center. All expenses incurred in collecting the units or parts thereof from the company's authorized service center, as well as expenses incurred with deputizing of service personnel/technicians towards conveyance and other incidentals etc. will be borne by the customer. Local Charges for transportation and handling charges may vary from location to location. Customers are advised to verify before. In case the customer desires to bring the unit on its own to the authorized service centre, the same shall be at its own risks & consequences.
2. Reinstallation or un-installation of product based on customer demand . Packing material if used will also be on chargeable basis.
3. Transportation cost in case customer is shifting the product to another location.
4. Damage resulting from operating the product in a corrosive atmosphere or contrary to the instructions outlined in the products owner's manual.
5. Damage to the product caused by accidents, pests and vermin, lightning, wind fire, floods, or acts of God.
6. Damage resulting from misuse, abuse , improper installation, repair or maintenance. Improper repair includes use of parts not approved or specified by LGEIL.
7. Damage or Failure caused by unauthorized modification or alteration or if it is used for other than the intended purpose
8. Damage or Failure caused by incorrect electrical current, voltage or inadequate electrical services, commercial or industrial use, or use of spurious/fake accessories or components, or cleaning products that are not approved by LGEIL.
9. Damage caused by transportation and handling, including scratches, dents, chips, and/or other damage to the finish of your product , unless such damage results from defect in materials or workmanship and is reported within fifteen (15) days of delivery (Call 1800-180-9999)
10. Damage or missing items to any display, open box, discounted or refurbished product.
11. Free accessories provided external to the product.
12. Damage to the product if customer gets the product repaired from unauthorized dealer/person.
13. On removal, tampering or alteration of any serial number/identification labels on the machine or any of its components.
14. On removal, tampering or alteration of any serial number/identification labels on the machine or any of its components.

LG India Electronics Pvt Ltd
A-27, Mohan Cooperative Industrial Estate,
Mathura Road , New Delhi-110044, INDIA
Ph No: 0120 2560940

LG
Life's Good

THIS WARRANTY IS NOT TRANSFERABLE AND APPLIES TO ORIGINAL PURCHASHER ONLY.

COMPLETE THIS RECORD AND KEEP IT TOGETHER WITH YOUR PURCAHSE DOCKET IN A SAFE PLACE YOU WILL HAVE TO PRODUCE THEM SHOULD YOU REQUIRE SERVICE UNDER THE TERMS OF THIS WARRANTY.

BRANCH ADDRESS & TELEPHONE NUMBER

Sno	Branch	Address
1	Agra	LGEIL, 1/2 Kendriya Hindi Sansthan,Khandeari Crossing, Agra,Tel:0562-2530913,2530913
2	Ahmedabad	LGEIL, 233-234, Platinum Plaza, Judges Bunglow Road, Bodakdev Road, Ahmedabad - 54,Tel:079-40040012-17
3	Aurangabad	LGEIL, 302 CIDCO No 3, Opp Hotel Ramgiri, Jalna Road, Aurangabad - 431003, Tel:0240- 2474055, 3295438
4	Bangalore	LGEIL, No. 914, 2nd Floor, Shri Venkateshwara Complex, Opp. IBP Petrol Bunk, 80ft Road, 6th Block, Koramangala - Banglore - 560095, Tel:080-25507201-202
5	Bhopal	Plot no. 10 , 2nd Floor , Alankar Complex , N.P Nagar, Zone - II, Bhopal - 462011, Tel:0755-4260717, 4062977
6	Bhubaneshwar	LGEIL, Plot No.02,1st Flr., Bapuji Nagar, Bhubaneshwar- 751009, Tel:0674-2531430, 2534280, 2597380 , 2597280
7	Calcutta	LGEIL, 1,Ho-Chi-Min-Sarani, 6th Floor, Metro Towers, Calcutta-700071, Tel:033-64610542, 64610543
8	Chandigarh	LGEIL, SCO No. 142-143, 3rd Floor, Sector-34A Chandigarh.-160022, Tel:0172-5087389-90
9	Chennai	LGEIL, AA11, 2nd Avenue,Fatima Tower, Anna Nagar West, Chennai-600040, Tel:044-65510501-04
10	Cochin	LGEIL, 40/1270, Vasudeva Buildings, T.D.Road, Ernakulam Cochin-682011, Tel:0484- 4027444, 4027555, 2369743
11	Coimbatore	LGEIL, 250 A, Sanganur Main Road, Kannappa Nagar, Coimbatore-641027, Tel:0422-2332197, 2332195, 2332506
12	Dehradun	LGEIL, M - 22, Mobbewala, Tata Commercial Compound, Dehradun Saharanpur Road, Dehradun, Tel:0135-2644213-283
13	Delhi	LGEIL, A-27, Mohan Co-operative, Industrial Estate, New Delhi, 110044, Tel:011-26991412
14	Durgapur	LGEIL, The City Residency Hotel Building, 3rd Floor, Sahid Khudiram Sarani, City Centre, Durgapur-16, Wet Bengal.713216, Tel:343-2542632
15	Ghaziabad	LGEIL, J-10, RDC Rajnagar Ghaziabad - 201001,Tel:0120-9811354152/ 64 /65
16	Goa	LGEIL.S3, NOVA CIDADE COMPLEX, NH17, ALTO PORVORIM, BARDEZ, GOA 403521, Tel:832-3294759
17	Gurgaon	LGEIL.3rd Floor, Ninex City Mart,Main Sohna Road, Sec-49, Gurgaon, Haryana, Tel:0124-4047461- 62 - 63/4272867
18	Guwahati	LGEIL, Shanti Neer Bhawan, C K Aggarwal Path, Chenikuti, Guwahati-781003, Tel:0361-2666958, 2663895, 2664993
19	Hubli	LGEIL, 1st Floor, Above Bellad & Co., Near Bannigida Bus stop, Gokul Road, Hubli-580030, Tel:0836-4250251, 2337251/52
20	Hyderabad	LGEIL, 1st Floor, Survey No.54, Pulla Reddy Building, Vikarampuri Main Road Kharkhana, Secunderabad -500009, Tel:040-27811732/3/4
21	Indore	LGEIL, 3rd Floor, 304 Bansi Trade Centre,581/5 M.G.Road, Indore-452003, Tel:0731-4264050, 4264051
22	Jabalpur	LGEIL. 1st Floor, ABN Tower, 9 Wright Town, Gate No-3, Madan Mahal,Station Road, Jabalpur-482002, Tel:761-4047426
23	Jaipur	LGEIL, B-71, Sahakar Marg, Lal Kothi Scheme, Jaipur-302015, Tel:0141-5111118

Sno	Branch	Address
24	Jalandhar	LGEIL, 4th Floor,Big C Mall, Lajpat Nagar, Jalandhar - 144001 Punjab,Tel:0181-4631411
25	Jammu	LGEIL, Plot No.-52,Yard No. 6,Transport Nagar, Narwal, Jammu-180006,Tel:0191-2477419/2474384
26	Jodhpur	LGEIL, 22(1-A)/21(2-B)/2, RIICO Heavy Industrial area, Jodhpur - 342003,Tel:291-2742392
27	Karnal	LGEIL, Super Tyre Building , Near New Anaj Mandi , Opp. New world Restaurnt , G . T Road , Karnal , Haryana - 132001, Tel:0184-2220567
28	Kolhapur	LGEIL.1st Floor,2nd Wing,Jupiter Commercial Complex Office No. 2&3, C.S No.38/B, E ward, Tarabai Park, Kolhapur- 416003, Tel:231-2521426
29	Kozhikode	LGEIL,1/3663G,4th floor Methew Brothers Arcade,Chakkorathukulam Kannur Road,Kozhikode-673005, Kerala., Tel:495-2366755
30	Lucknow	LGEIL,B- 537,Hari Kunj, Keshav Nagar, Sitapur Road Lukhnow -226020,Tel:0522-2756835-36 / 2757538-39 / 2759121
31	Ludhiana	LGEIL, Village Jhande,Near Badowal Railway Station,Opp ferozpur Road Ludhiana., Tel:0161-2804413 - 19
32	Madurai	LGEIL,No.429, Anna Nagar, 8th East Cross,(Near Vailankanni Church) Madurai - 625020, Tel:0452-2464016/2463007
33	Mangalore	LGEIL.D.No.19-5-299, "Satish", Near Mayura Appartment Old Kent Road, Paneshwar, Mangalore-575001, Tel:824-3259582
34	Mumbai	LGEIL, Trade Star, 4th Floor, A Wing, J.B Nagar,Andheri Kurla Road,Andheri (E) Mumbai-400059, Tel:022-28352882
35	Nagpur	LGEIL, 5a,Road No.13,Behind Msrtc Workshop, MIDC Hinga, Nagpur-440016, Tel:07104-235120, 235122
36	Patna	LGEIL, 2nd Floor, Ankit Chandra Deep Complex, Bander Bageecha, Near Samrat Hotel, Patna- 800001., Tel:0612-3298714, 3299156
37	Pune	LGEIL, 105/106, Premium Point,GM Road, Opp Modern High School, IIIrd Floor,Shivaji Marg.Pune -411005, Tel:020-66030100, 732/733/734/735
38	Raipur	LGEIL,Office No. 613, 614 , 615 , 616, Sixth floor of magneto , The Mall , Labhandi , Raipur(C.G) 492006, Tel:0771-4251700, 4251755
39	Rajkot	LGEIL, Sanskruti Apartment, Opp. Dr. Ambedkar Bhawan , Near Atithi Chowk , Akshar Road , Rajkot - 360004, Tel:281-2481499, 2467692, 2472837
40	Ranchi	LGEILl, 402, Commerce Tower, Opp. Gel Church Complex, Main Road, Ranchi,Tel:0651- 3294026, 2332242
41	Siliguri	LGEIL, Kelsons Complex, 3rd Floor, Beside City Garden, 157 Sevoke Road, Siligudi-734001,Tel:03842-231013
42	Surat	LGEIL1001-1004, Ascon Plaza, IInd Flr, Anand Mahal Road, Behind Bhulka Bhavan School,Adajan,Surat-395009, Tel:0261-2730982
43	Thane	LGEIL, Gall Shop No - 206,207, 2nd Floor , Sai Plaza , Above Vijay Sales Opp. Cine Wonder Mall, Ghodbunder Road, Thane(West)-400607, Tel:22-25891651, 25893617, 25891429
44	Tirupati	LGEIL, 13-6-600/44/166, Mpr Complex,Opp. Partha Dental Hospital, Peddakapu Layout, Tirupathi., Tel:0877-2282306 /08
45	Varanasi	LGEIL, Pama Complex, DLW, Lahartara Road, Shivdaspur, Manduadih, Varanasi UP-221002, Tel:542-2373437/36/32,
46	Vijaywada	LGEIL, Door No 32-2/1-7, Ratnam amba Street, Prajasakti Nagar, Moghalrajpuram, Vijaywada - 520010, Andhra Pradesh, Tel:0866-2497283
47	Warangal	LGEIL,HOUSE NO. 1- 8-598/1 FIRST FLOOR, BESIDE HDFC BANK NAKKALGUTTA, HANAMAKONDA-(WARANGAL) - 506001, Tel:870-2551453

Memo



LG 24 x 7 CALL CENTER OPERATIONS

CALL 1800-180-9999 (Toll Free)

SMS 5757554 (Send SMS)

CLICK www.lg.com
serviceindia@lge.com

Printed in Korea