LG
Life's Good

OWNER'S MANUAL
LED LCD TV

Please read this manual carefully before operating your set and retain it for future reference.

32LS4600	47LM4600	32LM5800
42LS4600	55LM4600	42LM5800
47LS4600		47LM5800

P/NO : MFL67372311 (1205-REV03)

www.lg.com

LICENSES

Supported licenses may differ by model. For more information about licenses, visit www.lg.com.

Manufactured under license from Dolby Laboratories. "Dolby" and the double-D symbol are trademarks of Dolby Laboratories.

HDMI, the HDMI logo and High-Definition Multimedia Interface are trademarks or registered trademarks of HDMI Licensing LLC.

ABOUT DIVX VIDEO: DivX® is a digital video format created by DivX, LLC, a subsidiary of Rovi Corporation. This is an official DivX Certified® device that plays DivX video. Visit divx.com for more information and software tools to convert your files into DivX video.

ABOUT DIVX VIDEO-ON-DEMAND: This DivX Certified® device must be registered in order to play purchased DivX Video-on-Demand (VOD) movies. To obtain your registration code, locate the DivX VOD section in your device setup menu. Go to vod.divx.com for more information on how to complete your registration.

"DivX Certified® to play DivX® video up to HD 1080p, including premium content."

"DivX®, DivX Certified® and associated logos are trademarks of Rovi Corporation or its subsidiaries and are used under license."

"Covered by one or more of the following U.S. patents:
7,295,673; 7,460,668; 7,515,710; 7,519,274"

OPEN SOURCE SOFTWARE NOTICE

To obtain the source code under GPL, LGPL, MPL and other open source licenses, that is contained in this product, please visit http://opensource.lge.com.

In addition to the source code, all referred license terms, warranty disclaimers and copyright notices are available for download.

LG Electronics will also provide open source code to you on CD-ROM for a charge covering the cost of performing such distribution (such as the cost of media, shipping and handling) upon email request to opensource@lge.com. This offer is valid for three (3) years from the date on which you purchased the product.

IMPORTANT SAFETY INSTRUCTIONS

Always comply with the following precautions to avoid dangerous situations and ensure peak performance of your product.



WARNING/CAUTION

RISK OF ELECTRIC SHOCK DO NOT OPEN



TO REDUCE THE RISK OF ELECTRIC SHOCK DO NOT REMOVE COVER (OR BACK). NO USER SERVICEABLE PARTS INSIDE. REFER TO QUALIFIED SERVICE PERSONNEL.



The lightning flash with arrowhead symbol, within an equilateral triangle, is intended to alert the user to the presence of uninsulated "dangerous voltage" within the product's enclosure that may be of sufficient magnitude to constitute a risk of electric shock to persons.



The exclamation point within an equilateral triangle is intended to alert the user to the presence of important operating and maintenance (servicing) instructions in the literature accompanying the appliance.

WARNING/CAUTION

- TO REDUCE THE RISK OF FIRE AND ELECTRIC SHOCK, DO NOT EXPOSE THIS PRODUCT TO RAIN OR MOISTURE.

Read these instructions.
Keep these instructions.
Heed all warnings.
Follow all instructions.



- Do not use this apparatus near water.



- Clean only with a dry cloth.



- Do not block any ventilation openings. Install in accordance with the manufacturer's instructions.



- Do not install near any heat sources such as radiators, heat registers, stoves, or other apparatus (including amplifiers) that produce heat.



- Do not defeat the safety purpose of the polarized or grounding-type plug. A polarized plug has two blades with one wider than the other. A grounding type plug has two blades and a third grounding prong. The wide blade or the third prong are provided for your safety. If the provided plug does not fit into your outlet, consult an electrician for replacement of the obsolete outlet (Can differ by country).



- Protect the power cord from being walked on or pinched particularly at plugs, convenience receptacles, and the point where they exit from the apparatus.



- Only use attachments/accessories specified by the manufacturer.



- Use only with a cart, stand, tripod, bracket, or table specified by the manufacturer, or sold with the apparatus. When a cart is used, use caution when moving the cart/apparatus combination to avoid injury from tip-over.



- Unplug this apparatus during lightning storms or when unused for long periods of time.

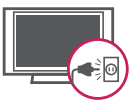

- Refer all servicing to qualified service personnel. Servicing is required when the apparatus has been damaged in any way, such as power-supply cord or plug is damaged, liquid has been spilled or objects have fallen into the apparatus, the apparatus has been exposed to rain or moisture, does not operate normally, or has been dropped.



- Do not stick metal objects or any other conductive material into the power cord. Do not touch the end of the power cord while it is plugged in.
- Keep the packing anti-moisture material or vinyl packing out of the reach of children. Anti-moisture material is harmful if swallowed. If swallowed by mistake, force the patient to vomit and visit the nearest hospital. Additionally, vinyl packing can cause suffocation. Keep it out of the reach of children.
- CAUTION concerning the Power Cord (Can differ by country):
  It is recommended that appliances be placed upon a dedicated circuit; that is, a single outlet circuit which powers only that appliance and has no additional outlets or branch circuits. Check the specification page of this owner's manual to be certain. Do not connect too many appliances to the same AC power outlet as this could result in fire or electric shock. Do not overload wall outlets. Overloaded wall outlets, loose or damaged wall outlets, extension cords, frayed power cords, or damaged or cracked wire insulation are dangerous. Any of these conditions could result in electric shock or fire. Periodically examine the cord of your appliance, and if its appearance indicates damage or deterioration, unplug it, discontinue use of the appliance, and have the cord replaced with an exact replacement part by an authorized service. Protect the power cord from physical or mechanical abuse, such as being twisted, kinked, pinched, closed in a door, or walked upon. Pay particular attention to plugs, wall outlets, and the point where the cord exits the appliance. Do not move the TV with the power cord plugged in. Do not use a damaged or loose power cord. Be sure do grasp the plug when unplugging the power cord. Do not pull on the power cord to unplug the TV.



- **Warning** - To reduce the risk of fire or electrical shock, do not expose this product to rain, moisture or other liquids. Do not touch the TV with wet hands. Do not install this product near flammable objects such as gasoline or candles, or expose the TV to direct air conditioning.



- Do not expose to dripping or splashing and do not place objects filled with liquids, such as vases, cups, etc. on or over the apparatus (e.g. on shelves above the unit).



- **Grounding**
  (Except for devices which are not grounded.) Ensure that you connect the earth ground wire to prevent possible electric shock (i.e. a TV with a three-prong grounded AC plug must be connected to a three-prong grounded AC outlet). If grounding methods are not possible, have a qualified electrician install a separate circuit breaker. Do not try to ground the unit by connecting it to telephone wires, lightening rods, or gas pipes.

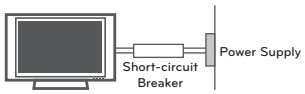

- **DISCONNECTING DEVICE FROM THE MAIN POWER**
  Mains plug is the disconnecting device. The plug must remain readily operable.
- As long as this unit is connected to the AC wall outlet, it is not disconnected from the AC power source even if the unit is turned off.
- Do not attempt to modify this product in any way without written authorization from LG Electronics. Unauthorized modification could void the user's authority to operate this product.

- **ANTENNAS Outdoor antenna grounding**
  (Can differ by country):
  If an outdoor antenna is installed, follow the precautions below. An outdoor antenna system should not be located in the vicinity of overhead power lines or other electric light or power circuits, or where it can come in contact with such power lines or circuits as death or serious injury can occur. Be sure the antenna system is grounded so as to provide some protection against voltage surges and built-up static charges. Section 810 of the National Electrical Code (NEC) in the U.S.A. provides information with respect to proper grounding of the mast and supporting structure, grounding of the lead-in wire to an antenna discharge unit, size of grounding conductors, location of antenna discharge unit, connection to grounding electrodes and requirements for the grounding electrode.
  Antenna grounding according to the National Electrical Code, ANSI/NFPA 70

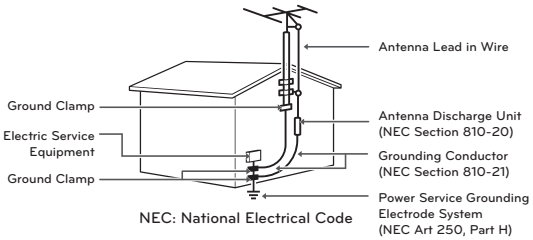

- **Cleaning**
  When cleaning, unplug the power cord and wipe gently with a soft cloth to prevent scratching. Do not spray water or other liquids directly on the TV as electric shock may occur. Do not clean with chemicals such as alcohol, thinners or benzine.
- **Moving**
  Make sure the product is turned off, unplugged and all cables have been removed. It may take 2 or more people to carry larger TVs. Do not press or put stress on the front panel of the TV.

- **Ventilation**
  Install your TV where there is proper ventilation. Do not install in a confined space such as a bookcase. Do not cover the product with cloth or other materials while plugged. Do not install in excessively dusty places.
- If you smell smoke or other odors coming from the TV, unplug the power cord and contact an authorized service center.
- Do not press strongly upon the panel with a hand or a sharp object such as a nail, pencil or pen, or make a scratch on it.
- Keep the product away from direct sunlight.

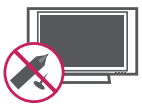

Never touch this apparatus or antenna during a thunder or lightning storm.

- When mounting a TV on the wall, make sure not to install the TV by hanging the power and signal cables on the back of the TV.
- Do not allow an impact shock or any objects to fall into the product, and do not drop anything onto the screen.
- **Dot Defect**
  The Plasma or LCD panel is a high technology product with resolution of two million to six million pixels. In a very few cases, you could see fine dots on the screen while you're viewing the TV. Those dots are deactivated pixels and do not affect the performance and reliability of the TV.
- **Generated Sound**
  "Cracking" noise: A cracking noise that occurs when watching or turning off the TV is generated by plastic thermal contraction due to temperature and humidity. This noise is common for products where thermal deformation is required.
  Electrical circuit humming/panel buzzing: A low level noise is generated from a high-speed switching circuit, which supplies a large amount of current to operate a product. It varies depending on the product.
  This generated sound does not affect the performance and reliability of the product.
- Take care not to touch the ventilation openings. When watching the TV for a long period, the ventilation openings may become hot. This does not affect the performance of the product or cause defects in the product.
- If the TV feels cold to the touch, there may be a small "flicker" when it is turned on. This is normal, there is nothing wrong with TV. Some minute dot defects may be visible on the screen, appearing as tiny red, green, or blue spots. However, they have no adverse effect on the TV's performance. Avoid touching the LCD screen or holding your finger(s) against it for long periods of time. Doing so may produce some temporary distortion effects on the screen.

DISPOSAL (Hg lamp only used in LCD TVs)

The fluorescent lamp used in this product contains a small amount of mercury. Do not dispose of this product with general household waste. Disposal of this product must be carried out in accordance to the regulations of your local authority.

Preventing "Image burn" or "Burn-in" on your TV screen

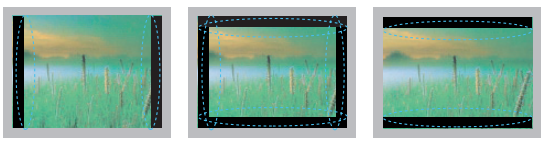

- If a fixed image displays on the TV screen for a long period of time, it will be imprinted and become a permanent disfigurement on the screen. This is "image burn" or "burn-in" and not covered by the warranty.
- If the aspect ratio of the TV is set to 4:3 for a long period of time, image burn may occur on the letterboxed area of the screen.
- Avoid displaying a fixed image on the TV screen for a long period of time (2 or more hours for LCD, 1 or more hours for the Plasma TV) to prevent image burn.

Viewing 3D Imaging (For 3D models)

WARNING

Viewing Environment

- Viewing Time
  - When watching 3D contents, take 5 - 15 minute breaks every hour. Viewing 3D contents for a long period of time may cause headache, dizziness, fatigue or eye strain.

Those that have a photosensitive seizure or chronic illness

- Some users may experience a seizure or other abnormal symptoms when they are exposed to a flashing light or particular pattern from 3D contents.
- Do not watch 3D videos if you feel nausea, are pregnant and/ or have a chronic illness such as epilepsy, cardiac disorder, or blood pressure disease, etc.
- 3D Contents are not recommended to those who suffer from stereo blindness or stereo anomaly. Double images or discomfort in viewing may be experienced.
- If you have strabismus (cross-eyed), amblyopia (weak eyesight) or astigmatism, you may have trouble sensing depth and easily feel fatigue due to double images. It is advised to take frequent breaks than the average adult.
- If your eyesight varies between your right and left eye, revise your eyesight prior to watching 3D contents.

Symptoms which require discontinuation or refraining from watching 3D contents

- Do not watch 3D contents when you feel fatigue from lack of sleep, overwork or drinking.
- When these symptoms are experienced, stop using/watching 3D contents and get enough rest until the symptom subsides.
  - Consult your doctor when the symptoms persist. Symptoms may include headache, eyeball pain, dizziness, nausea, palpitation, blurriness, discomfort, double image, visual inconvenience or fatigue.

⚠ CAUTION

Viewing Environment

- Viewing Distance
  - Maintain a distance of at least twice the screen diagonal length when watching 3D contents. If you feel discomfort in viewing 3D contents, move further away from the TV.

Viewing Age

- Infants / Children
  - Usage/ Viewing 3D contents for children under the age of 5 are prohibited.
  - Children under the age of 10 may overreact and become overly excited because their vision is in development (for example: trying to touch the screen or trying to jump into it. Special monitoring and extra attention is required for children watching 3D contents.
  - Children have greater binocular disparity of 3D presentations than adults because the distance between the eyes is shorter than one of adults. Therefore they will perceive more stereoscopic depth compared to adults for the same 3D image.
- Teenagers
  - Teenagers under the age of 19 may be stimulated to light coming from 3D videos. Advise them not to watch 3D videos for a long time when they are tired.
- Elderly
  - The elderly may perceive less of a 3D effect than the youth. Do not sit closer to the TV than the recommended distance.

Cautions when using the 3D glasses

- Make sure to use LG 3D glasses. Otherwise, you may not be able to view 3D videos properly.
- Do not use 3D glasses instead of your normal glasses, sunglasses or protective goggles.
- Using modified 3D glasses may cause eye strain or image distortion.
- Do not keep your 3D glasses in extremely high or low temperatures. It will cause deformation.
- The 3D glasses are fragile and are easy to be scratched. Always use a soft, clean piece of cloth when wiping the lenses. Do not scratch the lenses of the 3D glasses with sharp objects or clean/wipe them with chemicals.

TABLE OF CONTENTS

2 LICENSES

2 OPEN SOURCE SOFTWARE NOTICE

3 IMPORTANT SAFETY INSTRUCTIONS

7 Viewing 3D Imaging (For 3D models)

9 TABLE OF CONTENTS

10 INSTALLATION PROCEDURE

10 ASSEMBLING AND PREPARING

10 Unpacking
13 Optional Extras
14 Parts and buttons
15 Lifting and moving the TV
16 Setting up the TV
16 - Attaching the stand
17 - Mounting on a table
18 - Mounting on a wall
19 - Tidying cables

20 MAKING CONNECTIONS

20 Connecting to an antenna or cable
21 Connecting to a HD receiver, DVD, or VCR player
21 - HDMI Connection
22 - DVI to HDMI Connection
23 - Component Connection
24 - Composite Connection
25 Connecting to a PC
25 - HDMI Connection or DVI to HDMI Connection
27 Connecting to an Audio System
27 - Digital Optical Audio Connection
28 Connecting to a USB

29 REMOTE CONTROL

33 WATCHING TV

33 Turning the TV on for the first time

34 USING THE USER GUIDE

35 TROUBLESHOOTING

36 SPECIFICATIONS

39 MAINTENANCE

39 Cleaning Your TV
39 - Screen, frame, cabinet and stand
39 - Power cord

ENGLISH

NOTE

- Image shown may differ from your TV.
- Your TV's OSD (On Screen Display) may differ slightly from that shown in this manual.
- The available menus and options may differ from the input source or product model that you are using.
- New features may be added to this TV in the future.

INSTALLATION PROCEDURE

1 Open the package and make sure all the accessories are included.

2 Attach the stand to the TV set.

3 Connect an external device to the TV set.

4 Make sure the network connection is available.
You can use the TV network functions only when the network connection is made.

ASSEMBLING AND PREPARING

Unpacking

Check your product box for the following items. If there are any missing accessories, contact the local dealer where you purchased your product. The illustrations in this manual may differ from the actual product and item.

NOTE

- The items supplied with your product may vary depending on the model.
- Product specifications or contents of this manual may be changed without prior notice due to upgrade of product functions.
- For an optimal connection, HDMI cables and USB devices should have bezels less than 10 mm (0.39 inches) thick and 18 mm (0.7 inches) width.
- Use an extension cable that supports USB 2.0 if the USB cable or USB memory stick does not fit into your TV's USB port.

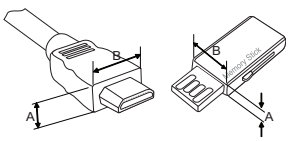

*A ≦ 10 mm (0.39 inches)
*B ≦ 18 mm (0.7 inches)

CAUTION

- Do not use any unapproved items to ensure the safety and product life span.
- Any damages or injuries by using unapproved items are not covered by the warranty.
- In case of some model, the thin film on screen is a part of TV, So don't take it off.

For LS4600 series

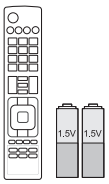

Remote control, Batteries (AAA)
(See p.29)

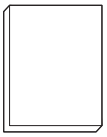

Owner's manual

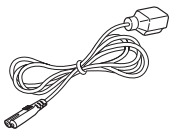

Power Cord

(For 32/42/47LS4600)



Stand Screws
8 EA, M4 x 20
(See p.16)



Desk-mount Screw
1 EA
(See p.17)

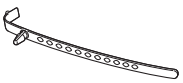

Cable holder
(See p.19)



Stand Body
(See p.16)

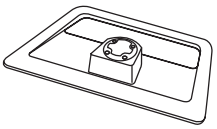

Stand Base
(See p.16)



Wall Mount Inner Spacers
4 EA
(See p.19)



Polishing cloth
(Depending on model)
Use this to remove dust from the cabinet.

ENGLISH

For LM4600, LM5800 series

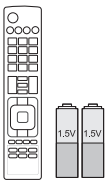

Remote control, Batteries (AAA)
(See p.31)

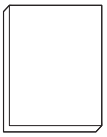

Owner's manual

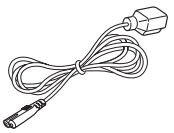

Power Cord



Stand Screws
8 EA, M4 x 20
(See p.16)

(For 47LM4600, 32/42/47LM5800)



Desk-mount Screw
1 EA
(See p.17)

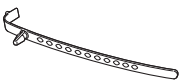

Cable holder
(See p.19)



Stand Body
(See p.16)

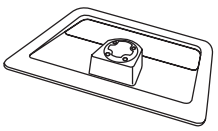

Stand Base
(See p.16)



Wall Mount Inner Spacers
4 EA
(See p.19)



Polishing cloth
(Depending on model)
Use this to remove dust from the cabinet.



Cinema 3D Glasses
The number of 3D glasses may differ depending on the model or country.

ENGLISH

Optional Extras

Optional extras can be changed or modified for quality improvement without any notification.
Contact your dealer to buy these items.
These devices only work with certain models.



AG-F3**
3D Glasses
The model name or design may be changed depending on the upgrade of product functions, manufacturer's circumstances or policies.

Compatibility	LM4600	LM5800	LS4600
AG-F3** 3D Glasses	●	●	

Parts and buttons

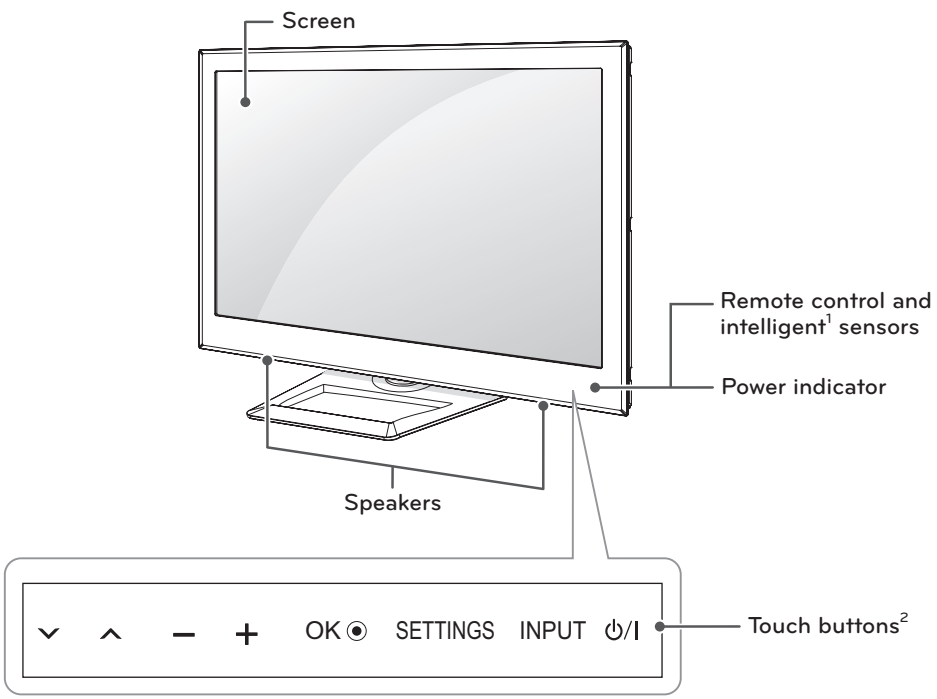

Touch button	Description
⏻/I	Turns the power on or off.
INPUT	Changes the input source.
SETTINGS	Accesses the Home menu, or saves your input and exits the menus.
OK ◉	Selects the highlighted menu option or confirms an input
- +	Adjusts the volume level.
v ^	Scrolls through the saved channels.

1 Intelligent sensor - Adjusts the image quality and brightness based on the surrounding environment.
2 All of the buttons are touch sensitive and can be operated through simple touch with your finger.

Lifting and moving the TV

When moving or lifting the TV, read the following to prevent the TV from being scratched or damaged and for safe transportation regardless of its type and size.

CAUTION

- Avoid touching the screen at all times, as this may result in damage to the screen.

- It is recommended to move the TV in the box or packing material that the TV originally came in.
- Before moving or lifting the TV, disconnect the power cord and all cables.
- When holding the TV, the screen should face away from you to avoid damage.



- Hold the top and bottom of the TV frame firmly. Make sure not to hold the transparent part, speaker, or speaker grill area.

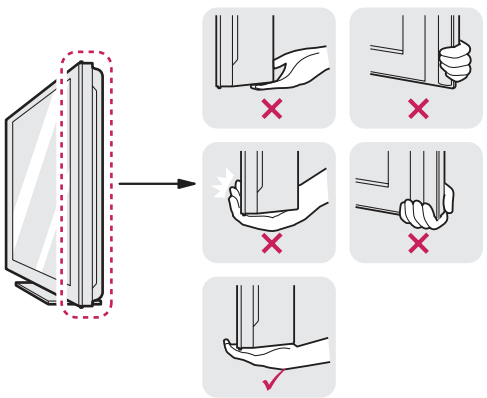

- When transporting a large TV, there should be at least 2 people.
- When transporting the TV by hand, hold the TV as shown in the following illustration.

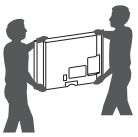

- When transporting the TV, do not expose the TV to jolts or excessive vibration.
- When transporting the TV, keep the TV upright, never turn the TV on its side or tilt towards the left or right.

ENGLISH

Setting up the TV

Put your TV on a pedestal stand and mount the TV on a table or wall.

Attaching the stand

If you are not mounting the TV to a wall, use the following instructions to attach the stand.

1

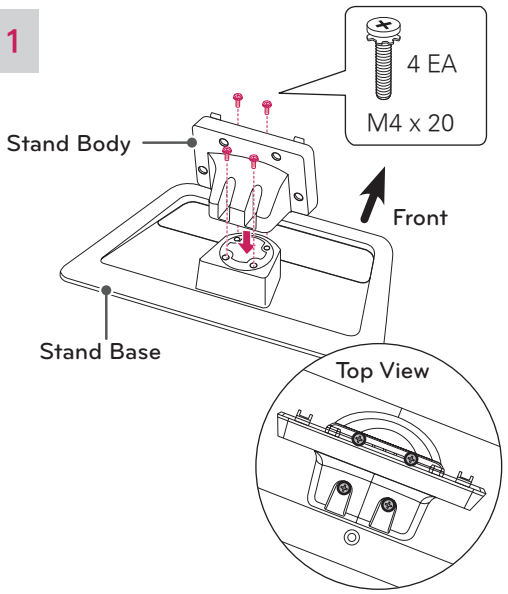

2

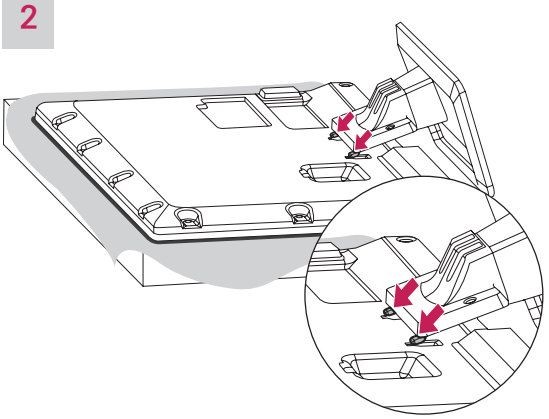

CAUTION

- When attaching the stand to the TV set, place the screen facing down on a cushioned table or flat surface to protect the screen from scratches.

3

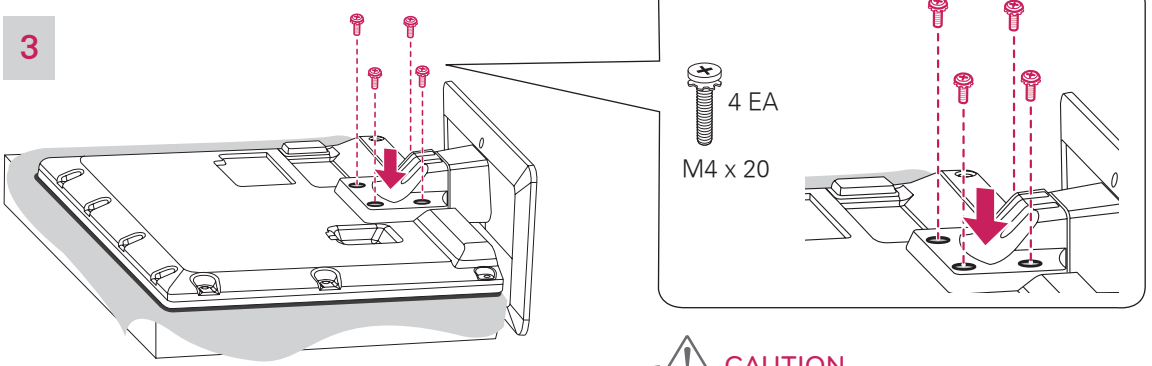

CAUTION

- Make sure that the screws are fastened completely. (If they are not fastened securely enough, the TV may tilt forward after being installed.)
- Do not fasten the screws with too much force; otherwise they may be worn out and get loosened.

NOTE

- Remove the stand before installing the TV on a wall mount by performing the stand attachment in reverse.

Mounting on a table

1 Lift and tilt the TV into its upright position on a table.
- Leave a 10 cm (minimum) space from the wall for proper ventilation.

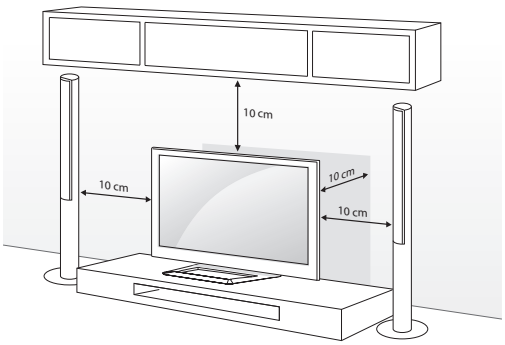

2 Connect the power cord to a wall outlet.

CAUTION
- Do not place the TV near or on sources of heat, as this may result in fire or other damage.

Adjusting the angle of the TV to suit view

Swivel 20 degrees to the left or right and adjust the angle of the TV to suit your view.

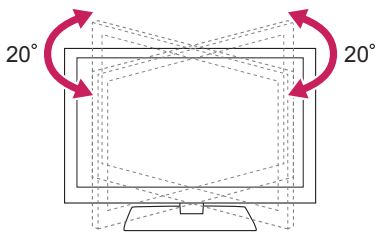

CAUTION
- When adjusting the angle of the TV, watch out for your fingers.
  - Personal injury may occur if hands or fingers are pinched. If the product is tilted too much, it may fall, causing damage or injury.

Securing the TV to a table

(For 32/42/47LS4600, 47LM4600, 32/42/47LM5800)
Fix the TV to a table to prevent from tilting forward, damage, and potential injury.
Mount the TV on a table, and then insert and tighten the supplied screw on the rear of the stand.

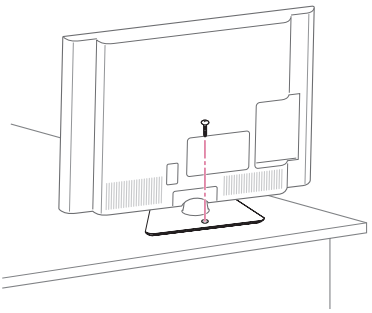

WARNING
- To prevent TV from falling over, the TV should be securely attached to the floor/wall per installation instructions. Tipping, shaking, or rocking the TV may cause injury.

ENGLISH

Securing the TV to a wall (optional)

(Depending on model)

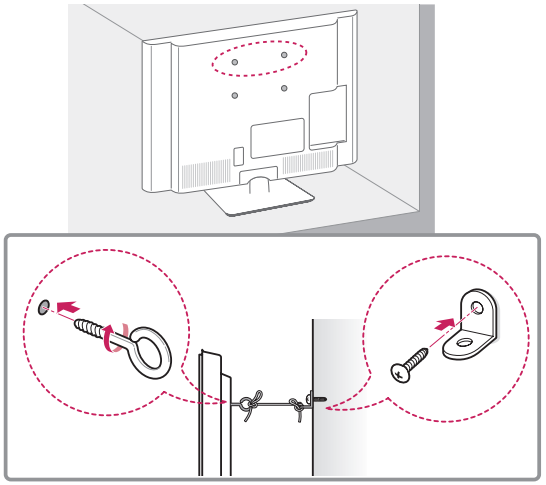

1 Insert and tighten the eye-bolts, or TV brackets and bolts on the back of the TV.
   - If there are bolts inserted at the eye-bolts position, remove the bolts first.
2 Mount the wall brackets with the bolts to the wall.
   Match the location of the wall bracket and the eye-bolts on the rear of the TV.
3 Connect the eye-bolts and wall brackets tightly with a sturdy rope.
   Make sure to keep the rope horizontal with the flat surface.

CAUTION

- Make sure that children do not climb on or hang on the TV.

NOTE

- Use a platform or cabinet that is strong and large enough to support the TV securely.
- Brackets, bolts and ropes are optional. You can obtain additional accessories from your local dealer.

Mounting on a wall

Attach an optional wall mount bracket at the rear of the TV carefully and install the wall mount bracket on a solid wall perpendicular to the floor. When you attach the TV to other building materials, please contact qualified personnel. LG recommends that wall mounting be performed by a qualified professional installer.

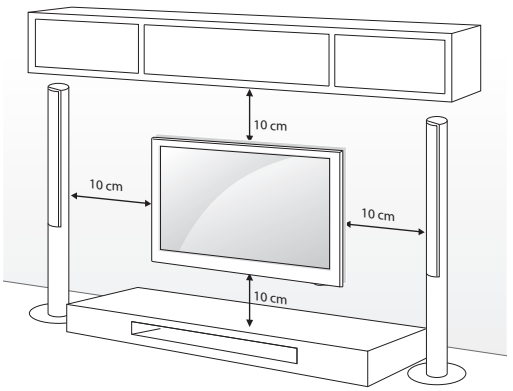

Make sure to use screws and wall mount bracket that meet the VESA standard. Standard dimensions for the wall mount kits are described in the following table.

Model	32LS4600, 32LM5800	42/47LS4600, 47/55LM4600, 42/47LM5800
VESA	200 x 200	400 x 400
Standard screw	M4	M6
Number of screws	4	4
Wall mount bracket (optional)	LSW200BX 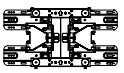	LSW400BX 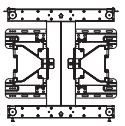
	LSW220BX 	LSW420BX 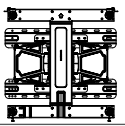

CAUTION

- Disconnect the power first, and then move or install the TV. Otherwise electric shock may occur.
- If you install the TV on a ceiling or slanted wall, it may fall and result in severe injury. Use an authorized LG wall mount and contact the local dealer or qualified personnel.
- Do not over tighten the screws as this may cause damage to the TV and void your warranty.
- Use the screws and wall mounts that meet the VESA standard. Any damages or injuries by misuse or using an improper accessory are not covered by the warranty.

NOTE

- Use the screws that are listed on the VESA standard screw specifications.
- The wall mount kit includes an installation manual and necessary parts.
- The wall mount bracket is optional. You can obtain additional accessories from your local dealer.
- The length of screws may differ depending on the wall mount. Make sure to use the proper length.
- For more information, refer to the manual supplied with the wall mount.
- When attaching a third-party wall mounting bracket to the TV, insert the wall mount inner spacers into the TV wall mount holes to move your TV in vertical angle. Please make sure not to use the spacers for LG wall mounting bracket.

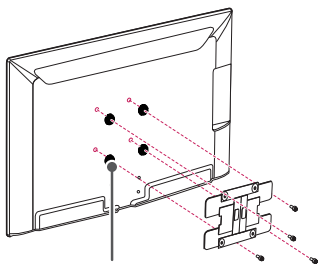

Wall Mount Inner Spacer

Tidying cables

1 Gather and bind the cables with the cable holder.

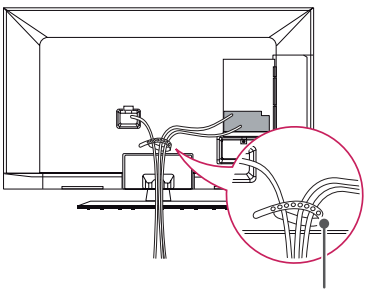

Cable holder

CAUTION

- Do not move the TV by holding the cable holder, as the cable holders may break, and injuries and damage to the TV may occur.

ENGLISH

MAKING CONNECTIONS

Connect various external devices to the TV and switch input modes to select an external device. For more information of external device's connection, refer to the manual provided with each device.
Available external devices are: HD receivers, DVD players, VCRs, audio systems, USB storage devices, PC, gaming devices, and other external devices.

NOTE

- If you record a TV program on a DVD recorder or VCR, make sure to connect the TV signal input cable to the TV through a DVD recorder or VCR. For more information of recording, refer to the manual provided with the connected device.
- The external device connection may differ from the model.
- Connect external devices to the TV regardless of the order of the TV port.

Connecting to an antenna or cable

Connect an antenna, cable, or cable box to watch TV while referring to the following. The illustrations may differ from the actual items and a RF cable is optional.

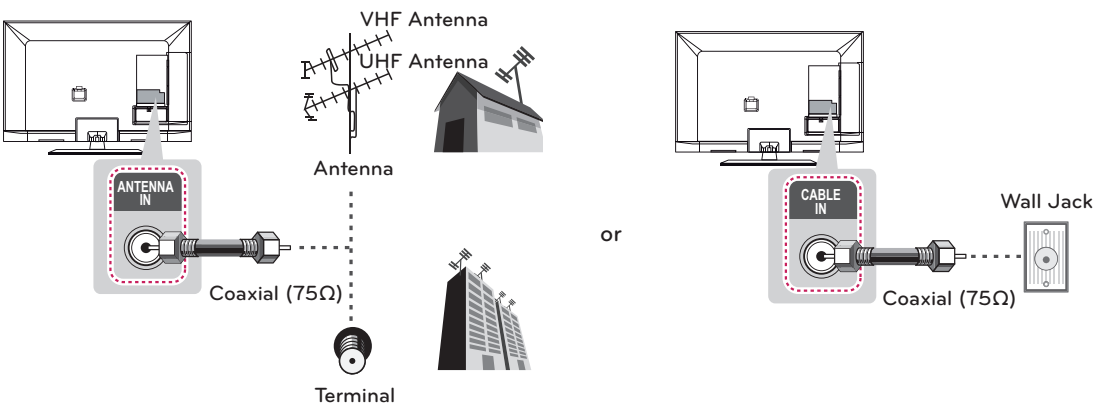

CAUTION

- Make sure not to bend the copper wire of the RF cable.

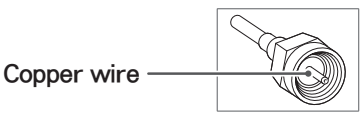

- Complete all connections between devices, and then connect the power cord to the power outlet to prevent damage to your TV.

NOTE

- To improve the picture quality in a poor signal area, please purchase a signal amplifier and install properly.
- Use a signal splitter to use more than 2 TVs.
- If the antenna is not installed properly, contact your dealer for assistance.

Connecting to a HD receiver, DVD, or VCR player

Connect a HD receiver, DVD, or VCR player to the TV and select an appropriate input mode.

HDMI Connection

HDMI is the best way to connect a device.
Transmits the digital video and audio signals from an external device to the TV. Connect the external device and the TV with the HDMI cable as shown in the following illustration.

NOTE

- Use the latest High Speed HDMI™ Cable with CEC (Customer Electronics Control) function.
- High Speed HDMI™ Cables are tested to carry an HD signal up to 1080p and higher.

Choose any HDMI input port to connect.
It does not matter which port you use.

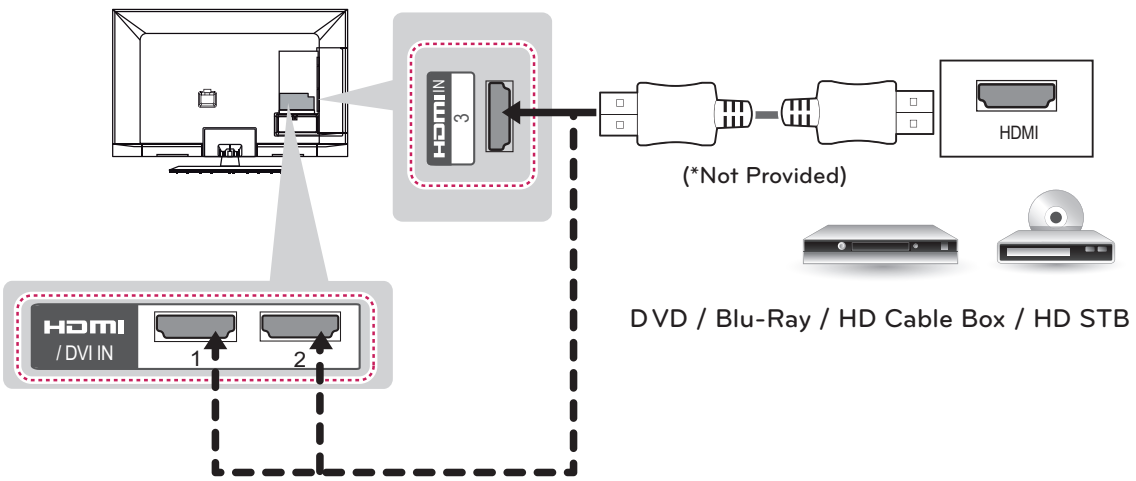

NOTE

- DTV Audio Supported Codec: MPEG, AAC, HE-AAC
- HDMI Audio Supported Format: Dolby Digital, PCM (Up to 192 KHz, 32k/ 44.1k/ 48k/ 88k/ 96k/ 176k/ 192k)
  -> Not Supported DTS.

ENGLISH

DVI to HDMI Connection

Transmits the digital video signal from an external device to the TV. Connect the external device and the TV with the DVI-HDMI cable as shown in the following illustration. To transmit an audio signal, connect an audio cable.

Choose any DVI input port to connect.
It does not matter which port you use.

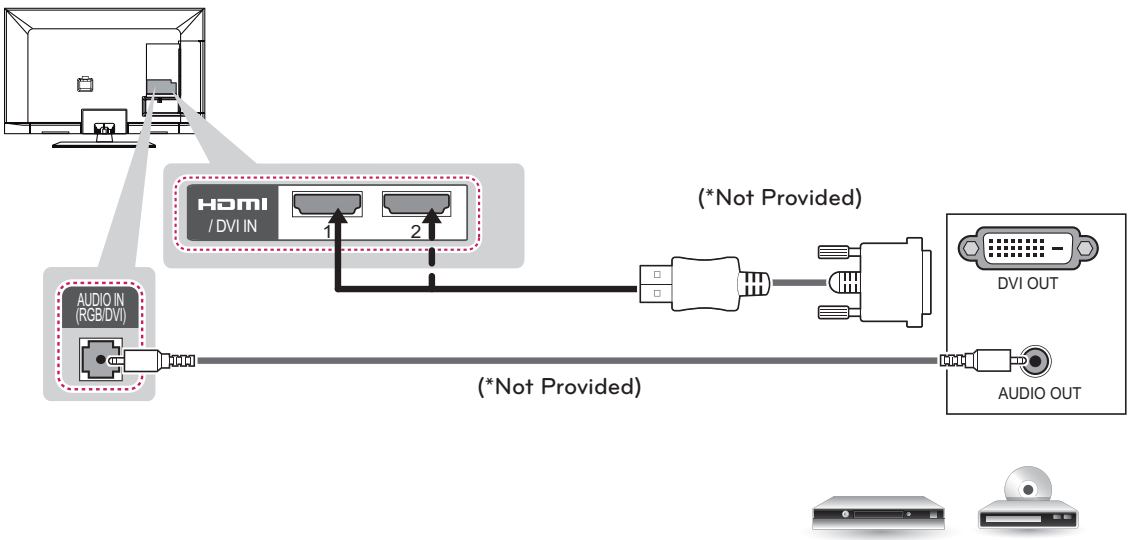

DVD / Blu-Ray / HD Cable Box

Component Connection

Transmits the analog video and audio signals from an external device to the TV. Connect the external device and the TV with the component cable as shown in the following illustration.

NOTE

- If cables are installed incorrectly, it could cause the image to display in black and white or with distorted color.
- **Check to ensure the cables are matched with the corresponding color connection.**

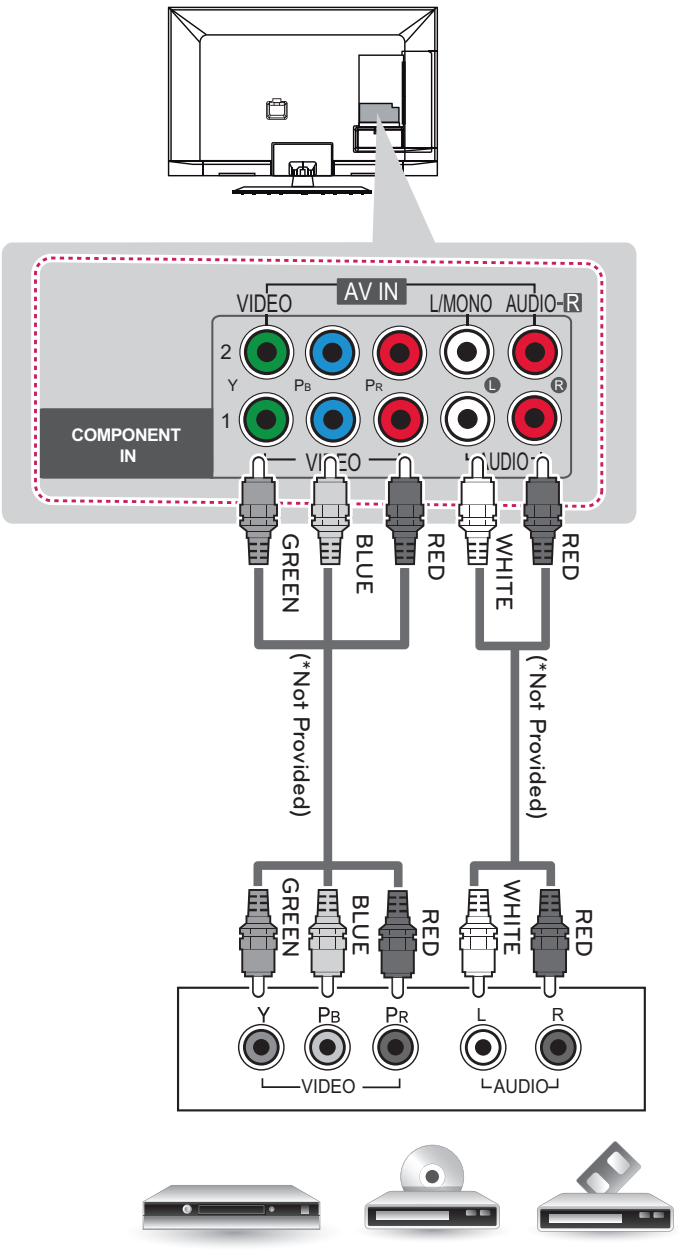

DVD / Blu-Ray / HD Cable Box

Composite Connection

Transmits the analog video and audio signals from an external device to the TV. Connect the external device and the TV with the composite cable as shown in the following illustration.

NOTE

- If you have a mono VCR, connect the audio cable from the VCR to the AUDIO L/MONO jack of the TV.

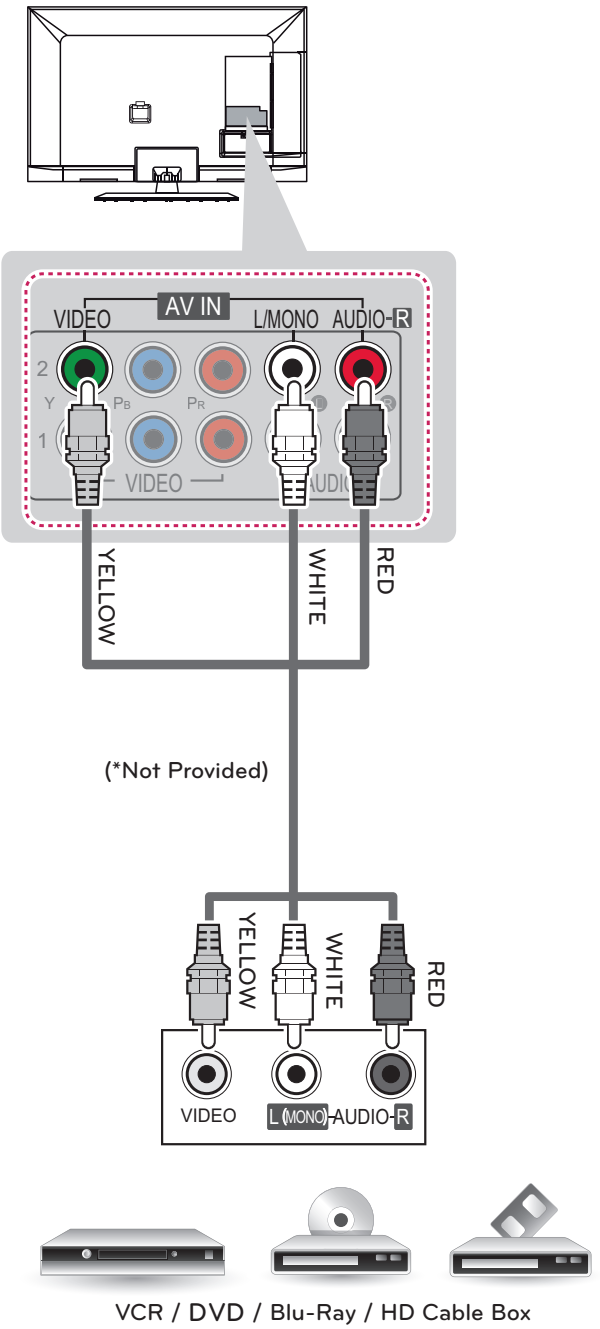

Connecting to a PC

NOTE

- It is recommended to use the TV with the HDMI connection for the best image quality.
- Depending on the graphics card, DOS mode may not work if a HDMI to DVI Cable is in use.
- In PC mode, there may be noise associated with the resolution, vertical pattern, contrast or brightness. If noise is present, change the PC output to another resolution, change the refresh rate to another rate or adjust the brightness and contrast on the PICTURE menu until the picture is clear.
- The synchronization input form for Horizontal and Vertical frequencies is separate.
- Depending on the graphics card, some resolution settings may not allow the image to be positioned on the screen properly.

HDMI Connection or DVI to HDMI Connection

Choose method A, B or C to make connection.

Method A: HDMI Connection

Choose any HDMI input port to connect.
It does not matter which port you use.

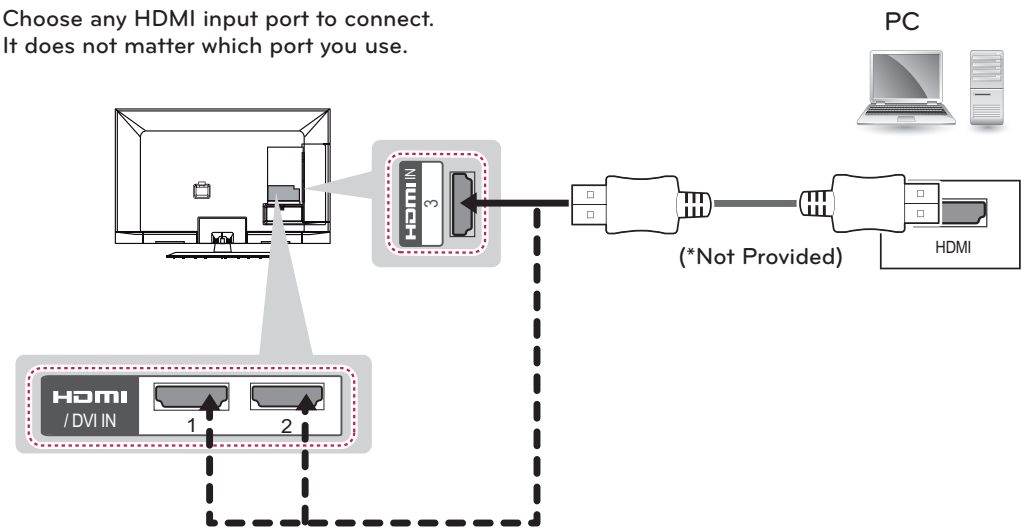

Method B: DVI to HDMI Connection

Choose any DVI input port to connect.
It does not matter which port you use.

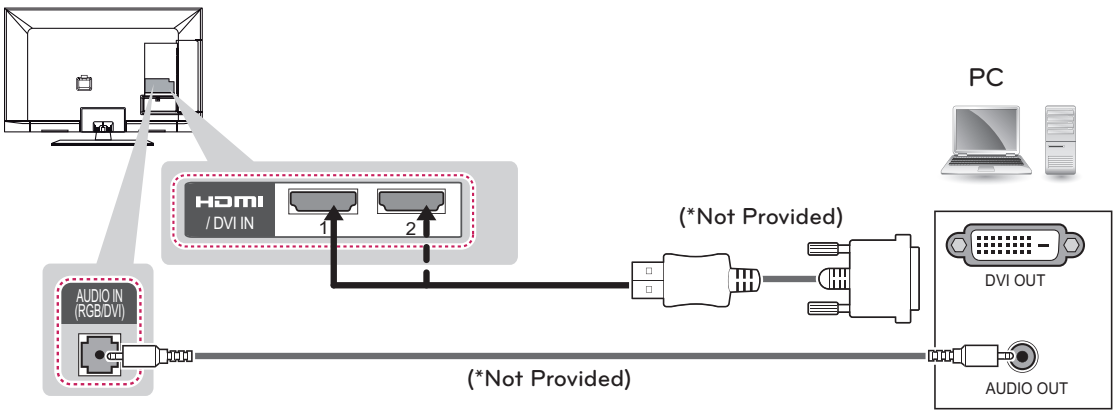

Method C: RGB Connection

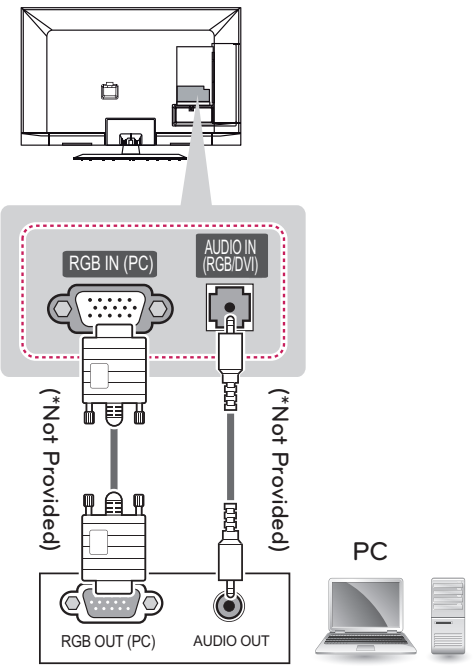

ENGLISH

Connecting to an Audio System

Use an optional external audio system instead of the built-in speaker.

NOTE

- If you use an optional external audio device instead of the built-in speaker, set the TV speaker feature to off.

Digital Optical Audio Connection

Transmits the digital audio signal from the TV to an external device. Connect the external device and the TV with the optical audio cable as shown in the following illustration.

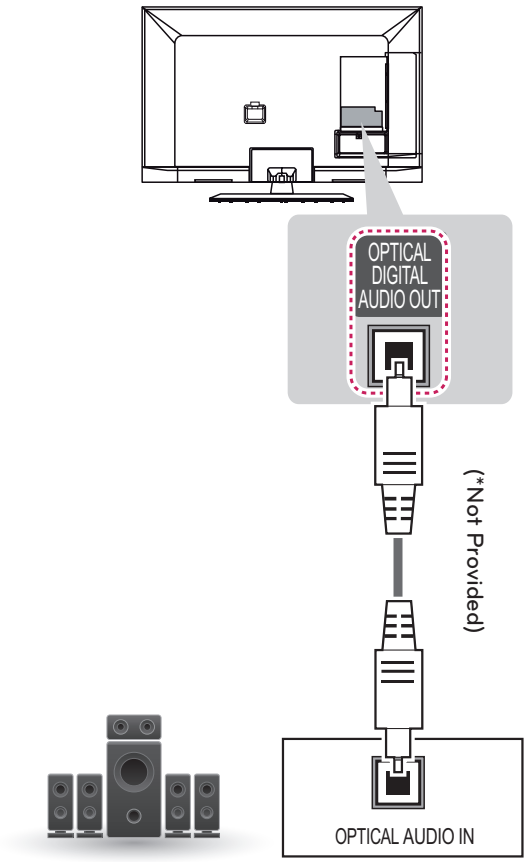

Digital Audio System

Connecting to a USB

Connect a USB storage device such as a USB flash memory, external hard drive, or a USB memory card reader to the TV and access the My media menu to use various multimedia files.

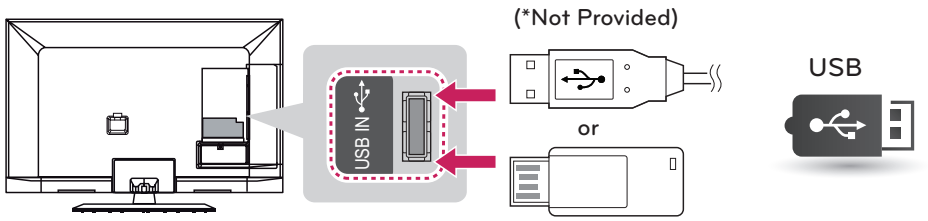

REMOTE CONTROL

The descriptions in this manual are based on the buttons on the remote control.
Please read this manual carefully and use the TV correctly.
To replace batteries, open the battery cover, replace batteries (1.5 V AAA) matching the ⊕ and ⊖ ends to the label inside the compartment, and close the battery cover. To remove the batteries, perform the installation actions in reverse.

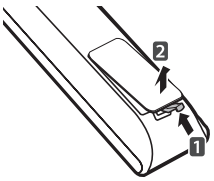

CAUTION

- Do not mix old and new batteries, as this may damage the remote control.

Make sure to point the remote control toward the remote control sensor on the TV.

For LS4600 series



(POWER)
Turns the TV on or off.

TV
Returns to the last TV channel.

RATIO
Resizes an image.

INPUT
Changes the input source; Turns the TV on.

ENERGY SAVING
Adjusts the brightness of the screen to reduce energy consumption.

Number button
Enters numbers.

LIST, - (Dash)
LIST: Accesses the saved channel list.
- (Dash): Inserts a dash between numbers such as 2-1 and 2-2.

Q.VIEW
Alternates between the two last channels selected (pressing repeatedly).

ENGLISH

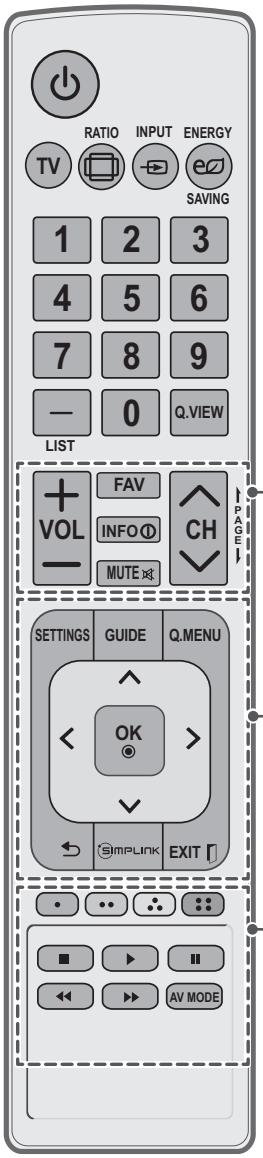

+ VOL −
Adjusts the volume level.

FAV
Accesses your favorite channel list.

INFO
Views the information of the current program and screen.

MUTE
Mutes all sounds.

∧ CH ∨, ‹ PAGE ›
CH: Scrolls through the saved channels.
PAGE: Moves to the previous or next screen.

SETTINGS
Accesses the main menu.

GUIDE
Displays the program event according to time scheduler.

Q. MENU
Accesses the quick menu.

Navigation buttons (up/down/left/right)
Scrolls through menus or options.

OK
Selects menus or options and confirms your input.

(BACK)
Returns to the previous level.

SIMPLINK
Accesses the AV devices connected to the TV;
Opens the SIMPLINK menu.

EXIT
Clears all on-screen displays and returns to TV viewing.

Color buttons
These access special functions in some menus.

Control buttons
Controls the SIMPLINK compatible devices (USB,SIMPLINK).

AV MODE
Selects an AV mode.

For LM4600, LM5800 series

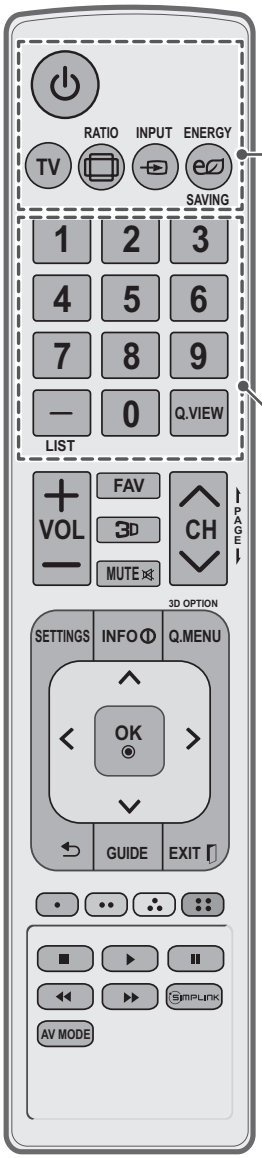

(POWER)
Turns the TV on or off.

TV
Returns to the last TV channel.

RATIO
Resizes an image.

INPUT
Changes the input source; Turns the TV on.

ENERGY SAVING
Adjusts the brightness of the screen to reduce energy consumption.

Number button
Enters numbers.

LIST, - (Dash)
LIST: Accesses the saved channel list.
- (Dash): Inserts a dash between numbers such as 2-1 and 2-2.

Q.VIEW
Alternates between the two last channels selected (pressing repeatedly).

ENGLISH

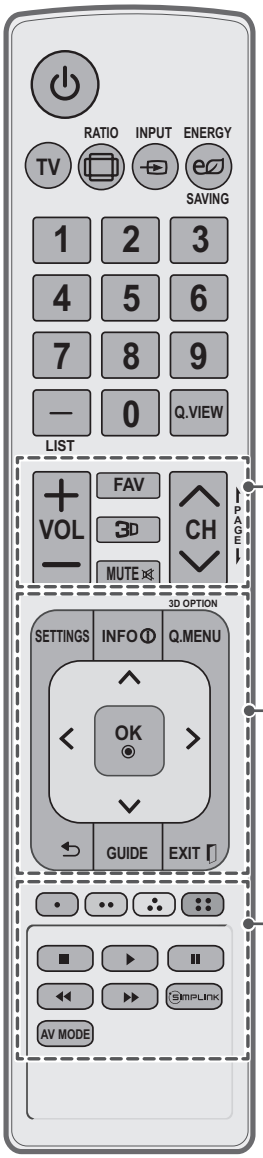

+ VOL —
Adjusts the volume level.

FAV
Accesses your favorite channel list.

3D (For 3D TV)
Used for viewing 3D video.

MUTE
Mutes all sounds.

∧ CH ∨, ‹ PAGE ›
CH: Scrolls through the saved channels.
PAGE: Moves to the previous or next screen.

SETTINGS
Accesses the main menu.

INFO
Views the information of the current program and screen.

Q. MENU, 3D OPTION
Q. MENU: Accesses the quick menu.
3D OPTION: Used for viewing 3D video.

Navigation buttons (up/down/left/right)
Scrolls through menus or options.

OK
Selects menus or options and confirms your input.

(BACK)
Returns to the previous level.

GUIDE
Displays the program event according to time scheduler.

EXIT
Clears all on-screen displays and returns to TV viewing.

Color buttons
These access special functions in some menus.

Control buttons
Controls the SIMPLINK compatible devices (USB,SIMPLINK).

SIMPLINK
Accesses the AV devices connected to the TV;
Opens the SIMPLINK menu.

AV MODE
Selects an AV mode.

WATCHING TV

Turning the TV on for the first time

When you turn the TV on for the first time, the Initial setting screen appears. Select a language and customize the basic settings.

1 Connect the power cord to a power outlet.
The Power indicator turns red and the TV switches to Standby mode.

2 In Standby mode, press the power button on the remote control to turn the TV on.
The Initial setting screen appears if you turn the TV on for the first time.

> **NOTE**
> • You can also access **Initial Setting** by accessing **OPTION** in the main menu.

3 Follow the on-screen instructions to customize your TV settings according to your preferences.

Language	Selects a language to display.
⇩	
Mode Setting	Selects **Home Use** for the home environment.
⇩	
Power Indicator	Sets the Standby light.
⇩	
Time Zone	Selects the time zone and daylight saving.
⇩	
Network Setting	Sets your network to enable network-related features on the TV.
⇩	
Auto Tuning	Scans and saves available channels automatically.

> **NOTE**
> • To display images in the best quality for your home environment, select **Home Use**.
> • **Store Demo** is suitable for the retail environment.
> • If you select **Store Demo**, any customized settings will switch back to the default settings of **Store Demo** in 5 minutes.
> • The **Standby light** feature is disabled in Store Demo mode.

4 When the basic settings are complete, press **OK**.

> **NOTE**
> • If you do not complete the Initial setting, it will appear whenever the TV turns on.
> • Disconnect the power cord from the power outlet when you do not use the TV for a long period of time.

5 To turn the TV off, press the power button on the remote control.

ENGLISH

USING THE USER GUIDE

User Guide allows you to more easily access the detailed TV information.

1 Press **SETTINGS** to access the main menus.

2 Press the **RED** button to access the **Customer Support** menus.



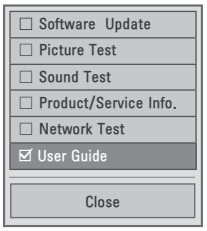

3 Press the Navigation buttons to scroll to **User Guide** and press **OK**.

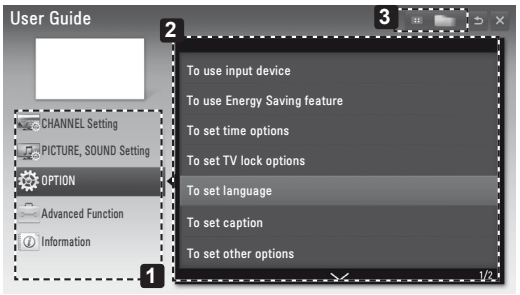

1 Allows to select the category you want.

2 Allows to select the item you want.
You can use ∧/∨ to move between pages.

3 Allows to browse the description of the function you want from the index.

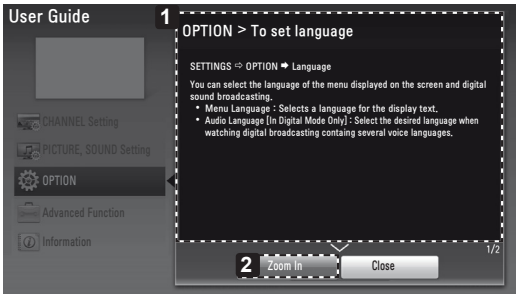

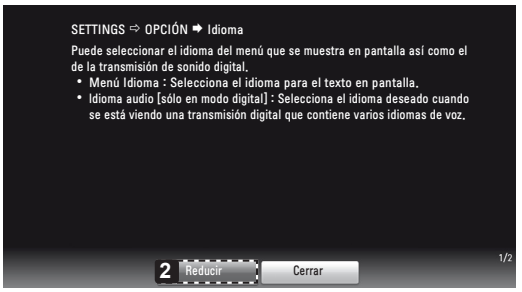

1 Shows the description of the selected menu.
You can use ∧/∨ to move between pages.

2 Zooms in or out the screen.

ENGLISH

TROUBLESHOOTING

General

Problem	Solution
Cannot control the TV with the remote control.	• Check the remote control sensor on the product and try again. • Check if there is any obstacle between the product and the remote control. • Check if the batteries are still working and properly installed (⊕ to ⊕, ⊖ to ⊖).
No image display and no sound is produced.	• Check if the product is turned on. • Check if the power cord is connected to a wall outlet. • Check if there is a problem in the wall outlet by connecting other products.
The TV turns off suddenly.	• Check the power control settings. The power supply may be interrupted. • Check if the Auto sleep feature is activated in the Time settings. • If there is no signal while the TV is on, the TV will turn off automatically after 15 minutes of inactivity.

SPECIFICATIONS

Product specifications may be changed without prior notice due to upgrade of product functions.

Power requirement		AC100 - 240 V ~ 50/60 Hz
Television System		NTSC, PAL-M/N, SBTVD
Program Coverage		VHF 2-13, UHF 14-69, CATV 1-135
External Antenna Impedance		75 Ω
Environment condition	Operating Temperature	0 - 40°C
	Operating Humidity	Less than 80%
	Storage Temperature	-20 - 60°C
	Storage Humidity	Less than 85%

MODELS		32LS4600 (32LS4600-SA)	42LS4600 (42LS4600-SA)
Dimensions (W x H x D)	With stand	746.0 mm x 528.0 mm x 204.0 mm	979.0 mm x 660.0 mm x 269.0 mm
	Without stand	746.0 mm x 462.0 mm x 35.5 mm	979.0 mm x 593.0 mm x 35.5 mm
Weight	With stand	9.7 kg	15.1 kg
	Without stand	8.2 kg	12.7 kg
Current Value / Power consumption		0.8 A / 80 W	1.0 A / 100 W

MODELS		47LS4600 (47LS4600-SA)
Dimensions (W x H x D)	With stand	1089.0 mm x 720.0 mm x 269.0 mm
	Without stand	1089.0 mm x 655.0 mm x 35.5 mm
Weight	With stand	17.4 kg
	Without stand	14.9 kg
Current Value / Power consumption		1.2 A / 120 W

MODELS		47LM4600 (47LM4600-SB)	55LM4600 (55LM4600-SB)
Dimensions (W x H x D)	With stand	1089.0 mm x 720.0 mm x 269.0 mm	1263.0 mm x 822.0 mm x 315.0 mm
	Without stand	1089.0 mm x 655.0 mm x 35.5 mm	1263.0 mm x 754.0 mm x 35.5 mm
Weight	With stand	17.4 kg	25.5 kg
	Without stand	14.9 kg	21.9 kg
Current Value / Power consumption		1.2 A / 120 W	1.5 A / 150 W

MODELS		32LM5800 (32LM5800-SB)	42LM5800 (42LM5800-SB)
Dimensions (W x H x D)	With stand	746.0 mm x 528.0 mm x 204.0 mm	979.0 mm x 660.0 mm x 269.0 mm
	Without stand	746.0 mm x 462.0 mm x 35.5 mm	979.0 mm x 594.0 mm x 35.5 mm
Weight	With stand	9.8 kg	15.6 kg
	Without stand	8.5 kg	13.1 kg
Current Value / Power consumption		0.8 A / 80 W	1.0 A / 100 W

MODELS		47LM5800 (47LM5800-SB)
Dimensions (W x H x D)	With stand	1089.0 mm x 722.0 mm x 269.0 mm
	Without stand	1089.0 mm x 655.0 mm x 35.5 mm
Weight	With stand	18.1 kg
	Without stand	15.6 kg
Current Value / Power consumption		1.2 A / 120 W

3D Supported Formats (For 3D TV)

Input	Signal	Resolution	Horizontal Frequency (kHz)	Vertical Frequency (Hz)	Playable 3D video format
HDMI	720p	1280x720	89.90 / 90.00 / 75.00	59.94 / 60.00 / 50.00	Frame Packing
			45.00 / 37.50	60 / 50	Side by Side (half), Top & Bottom
	1080i	1920x1080	33.70 / 28.125	60 / 50	Side by Side (half), Top & Bottom
	1080p	1920x1080	53.95 / 54.00	23.98 / 24.00	Frame Packing
			67.50 / 56.30	60.00 / 50.00	Side by Side, Top & Bottom, Single Frame Sequential
			27.00	24.00	Side by Side (half), Top & Bottom
			33.70	30.00	Side by Side (half), Top & Bottom
RGB	1080p	1920x1080	66.587	59.93	Top & Bottom, Side by Side
USB	1080p	1920x1080	33.75	30.00	Side by Side, Top & Bottom, MPO (Photo), JPS(Photo)
DLNA	1080p	1920x1080	33.75	30.00	Side by Side, Top & Bottom, MPO (Photo), JPS(Photo)
	Signal				Playable 3D video format
DTV	720p, 1080i				Side by Side, Top & Bottom

ENGLISH

HDMI (DTV) supported mode

Resolution	Horizontal Frequency (KHz)	Vertical Frequency (Hz)
720x480p	31.47 31.50	59.94 60.00
720x576p	31.250	50.00
1280x720p	44.96 45.00 37.500	59.94 60.00 50.00
1920x1080i	33.72 33.75 28.125	59.94 60.00 50.00
1920x1080p	26.97 27.00 33.71 33.75 67.432 67.50 56.250	23.976 24.00 29.97 30.00 59.94 60.00 50.00

Component port connecting information

Component ports on the TV	Y	P_B	P_R

Video output ports on DVD player	Y	P_B	P_R
	Y	B-Y	R-Y
	Y	Cb	Cr
	Y	Pb	Pr

Component supported mode

Resolution	Horizontal Frequency (KHz)	Vertical Frequency (Hz)
720x480i	15.73 15.73	59.94 60.00
720x480p	31.47 31.50	59.94 60.00
720x576i	15.625	50.00
720x576p	31.250	50.00
1280x720p	44.96 45.00 37.500	59.94 60.00 50.00
1920x1080i	33.72 33.75 28.125	59.94 60.00 50.00
1920x1080p	26.97 27.00 33.71 33.75 67.432 67.50 56.250	23.976 24.00 29.97 30.00 59.94 60.00 50.00

MAINTENANCE

Cleaning Your TV

Clean your TV regularly to keep the best performance and to extend the product lifespan.

CAUTION

- Make sure to turn the power off and disconnect the power cord and all other cables first.
- When the TV is left unattended and unused for a long time, disconnect the power cord from the wall outlet to prevent possible damage from lightning or power surges.

Screen, frame, cabinet and stand

To remove dust or light dirt, wipe the surface with a dry, clean, and soft cloth.
To remove major dirt, wipe the surface with a soft cloth dampened in clean water or a diluted mild detergent. Then wipe immediately with a dry cloth.

CAUTION

- Do not push, rub, or hit the surface with your fingernail or a sharp object, as this may result in scratches on the screen and image distortions.
- Do not use any chemicals, such as waxes, benzene, alcohol, thinners, insecticides, air fresheners, lubricants, as these may damage the screen's finish and cause discoloration.
- Do not spray liquid onto the surface. If water enters the TV, it may result in fire, electric shock, or malfunction.

Power cord

Remove the accumulated dust or dirt on the power cord regularly.



The model and serial number of the TV is located on the back and/or one side of the TV. Record it below should you ever need service.

MODEL _____

SERIAL _____