

LG
Life's Good

ENGLISH
FRANÇAIS
ESPAÑOL

OWNER'S MANUAL

REFRIGERATOR

Please read this guide thoroughly before operating and keep it handy for reference at all times.

P/No.:MFL38752143

www.lg.com

CONTENTS

IMPORTANT SAFETY INSTRUCTION 2
FEATURE CHART.....3
INSTALLATION 4
OPERATION 5
Starting
Temperature Control
Ice making
Defrosting
SUGGESTIONS ON FOOD STORAGE 6
CLEANING 7
GENERAL INFORMATION 7
REPOSITIONING THE DOOR HINGE(Option).....8
BEFORE CALLING FOR SERVICE 9

IMPORTANT SAFETY INSTRUCTION

BASIC SAFETY PRECAUTIONS

This guide contains many important safety messages.

Always read and obey all safety messages.

⚠ This is the safety alert symbol. It alerts you to safety messages that inform you of hazards that can kill or hurt you or others or cause damage to the product. All safety messages will be preceded by the safety alert symbol and the hazard signal word DANGER, WARNING, or CAUTION. These words mean:

⚠ DANGER **You will be killed or seriously injured if you don't follow instructions.**

⚠ WARNING **You can be killed or seriously injured if you don't follow instructions.**

⚠ CAUTION **Indicates an imminently hazardous situation which, if not avoided, may result in minor or moderate injury, or product damage only.**

All safety messages will identify the hazard, tell you how to reduce the chance of injury, and tell you what can happen if the instructions are not followed.

DO NOT USE AN EXTENSION CORD

If possible, connect the refrigerator to its own individual electrical outlet to prevent it and other appliances or household lights from causing an overload that could cause a power outage.

POWER CORD REPLACEMENT

If the power cord of the refrigerator is damaged, have it replaced by a repair shop appointed manufacturer, as special tools are required.

ABOUT GROUNDING(EARTHING)

In the event of an electric short circuit, grounding(earthing) reduces the risk of electric shock by providing an escape wire for the electric current.
In order to prevent possible electric shock, this appliance must be grounded.
Improper use of the grounding plug can result in an electric shock. Consult a qualified electrician or service person if the grounding instructions are not completely understood, or if you have doubts on whether the appliance is properly grounded.

VERY DANGEROUS ATTRACTION

An empty refrigerator can be a dangerous attraction to children. Remove either gasket, latche, lid or the entire door from your unused appliance,or take some other action to make it harmless.

This appliance must be grounded(earthed).

DON'T WAIT! DO IT NOW!

NEVER STORE EXPLOSIVES AND CHEMICALS

⚠ CAUTION

This appliance is not intended for use by persons (including children) with reduced physical, sensory or mental capabilities, or lack of experience and knowledge, unless they have been given supervision or instruction concerning use of the appliance by a person responsible for their safety. Children should be supervised to ensure that they do not play with the appliance.Keep the key out of reach of children and not in the vicinity of the refrigerator.

FEATURE CHART

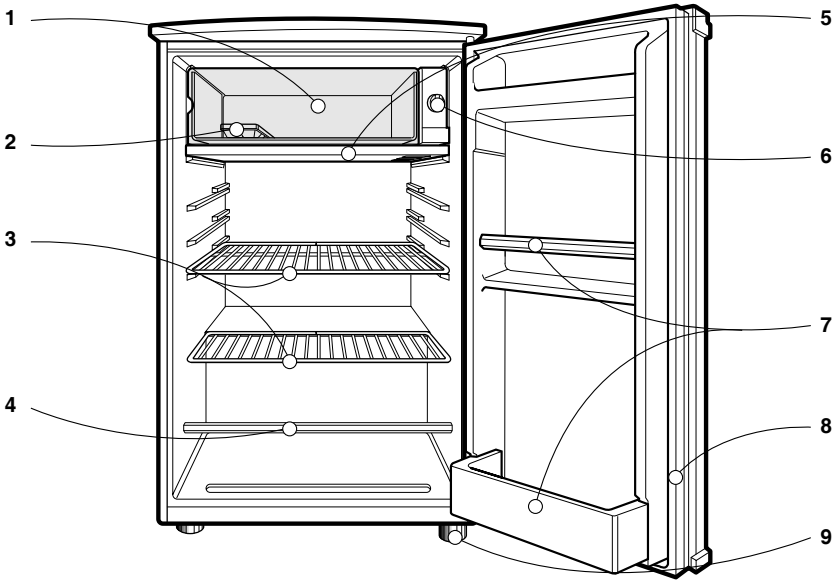

1. Evaporator: Never use any sharp instruments to remove ice or frost. This may puncture the evaporator.

2. Ice Tray

3. Refrigerator shelves

4. P.V.C Bar: For fruits and vegetables.

5. Drip Tray or Chiller Tray(Optional)

: Drip Tray ; Collects water that drips off the evaporator when defrosting.

: Chiller Tray ; 0°C Zone. It can be used as a drip tray when defrosting.

6. Temperature Control Dial.

7. Refrigerator Door Rack

8. Magnetic Door Seal

9. Leveling Screw

THIS REFRIGERATOR IS MANUFACTURED WITH GREAT CARE, AND UTILIZES THE LATEST IN TECHNOLOGY.
WE ARE CONFIDENT THAT YOU WILL BE FULLY SATISFIED WITH IT'S PERFORMANCE AND RELIABILITY.
BEFORE YOU START YOUR REFRIGERATOR, PLEASE READ THIS BOOKLET CAREFULLY. IT PROVIDES EXACT INSTRUCTIONS FOR INSTALLATION, OPERATION AND MAINTENANCE, AND ALSO SUPPLIES SOME USEFUL HINTS.

INSTALLATION

1. Select a good location.
   Place your refrigerator where it is easy to use.

2. Avoid placing the unit near heat sources, direct sunlight or moisture.

3. To ensure proper air circulation around the fridge-freezer, please maintain sufficient space on both the sides as well as top and maintain at least 2 inches (5 cm) from the rear wall.

4. To avoid vibrations, the unit must be level.
   If required, adjust the leveling screw to compensate for unevenness of the floor.
   The front should be slightly higher than the rear to aid in door closing.
   Leveling screw can be turned easily by tipping the cabinet slightly.
   Turn the leveling screw clockwise to raise the unit, counterclockwise to lower it.

5. Clean your refrigerator thoroughly and wipe off all dust accumulated during shipping.

6. Install accessories such as ice tray, shelf, etc., in their proper places.They are packed together to prevent possible damage during shipment.

7. Connect the power supply cord (or plug) to the outlet. Don't double up with other appliances on the same outlet.

8. Prior to use, leave your refrigerator on for 2 or 3 hours.
   Check the flow of cold air on the evaporator to ensure proper cooling.
   Your refrigerator is now ready for use.

9. When you put in a power cord, please refer to the label situated on the back plate in order to classify the rating.

OPERATION

STARTING

When your refrigerator is first installed, leave it for 2 or 3 hours for stabilization to normal operating temperature before filling it with food.

Delay 5 minutes before restarting if operation has been interrupted.

TEMPERATURE CONTROL

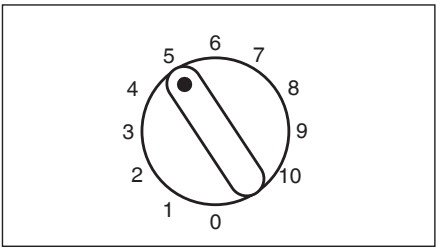

Initially, set the refrigerator compartment control at mid position.

If you wish a colder temperature, set the desired compartment control to a higher number.

ICE MAKING

- To make ice cubes, fill the ice tray with water and place it on the evaporator.
- To remove ice cubes, gently twist the tray while holding it at its ends.

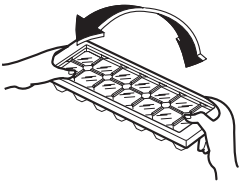

OPERATION

DEFROSTING

- It is necessary to regularly defrost your refrigerator in order to ensure efficient operation. The frost on the surface of the evaporator should not exceed a quarter of an inch(6mm) before defrosting.
- To defrost, turn the control to '0'.
- Before you start the defrosting operation, remove food from the evaporator and place the drip tray in its proper position.
- When defrosting is completed, remove the drip tray, empty water, dry and put it back to its normal position. Turn the control dial to a desired position.

⚠ CAUTION **Never use any sharp or metallic instruments to remove ice, frost or ice tray from the evaporator.**

SUGGESTIONS ON FOOD STORAGE

STORING FOOD

- Store fresh food in the refrigerator. How food is frozen and thawed is an important factor in maintaining its freshness and flavor.
- Do not store food which goes bad easily at low temperatures, such as bananas, pineapples, and melons.
- Allow hot food to cool prior to storing. Placing hot food in the refrigerator could spoil other food, and lead to higher electric bills!
- When storing, wrap food in vinyl, or place in a covered container. This prevents moisture from evaporating, and helps food to keep its taste and nutrients.
- Do not open the door frequently. Opening the door lets warm air enter the refrigerator, causing temperatures to rise.
- Do not store bottles on the evaporator - they may break when frozen.
- Always clean food prior to refrigeration. Vegetables and fruits should be washed and wiped, and packed food should be wiped clean, to prevent adjacent food from spoiling.

CLEANING

It is important that your refrigerator be kept clean to prevent undesirable odors. Spilled food should be wiped up immediately, since it may acidify and stain plastic surfaces if allowed to settle.

Never use metallic scouring pads, brushes, coarse abrasive cleaners or strong alkaline solutions on any surface.

Before you clean, however, remember that damp objects will stick or adhere to extremely cold surfaces. Do not touch frozen surfaces with wet or damp hands.

EXTERIOR - Use a lukewarm solution of mild soap or detergent to clean the durable finish of your refrigerator. Wipe with a clean, damp cloth and then dry.

INTERIOR - Regular cleaning of the interior and interior parts is recommended. Disconnect the power supply, and remove food and shelves, trays etc. Wash all compartment and shelves, trays etc. with a baking soda solution. Rinse and dry.

⚠ WARNING

Always remove power cord from the wall outlet prior to cleaning in the vicinity of electrical parts. Wipe up excess moisture with a sponge or cloth to prevent water or liquid from getting into any electrical part and causing a electric shock. Do not use flammable or toxic cleaning liquids.

GENERAL INFORMATION

VACATION TIME

During average length vacations, you will probably find it best to leave the refrigerator in operation. When you plan to be away for an extended period, remove all food, disconnect the power cord, clean the interior thoroughly, and leave the door OPEN to prevent odor formation.

POWER FAILURE

Most power failures are corrected in an hour or two and will not affect your refrigerator temperatures. However, you should minimize the number of door openings while the power is off. During power failures of longer duration, place a block of dry ice on top of your frozen packages.

IF YOU MOVE

Remove or securely fasten down all loose items inside the refrigerator.
To avoid damaging the leveling screw, turn them all the way into the base.

REPOSITIONING THE DOOR HINGE(Option)

Your refrigerator is designed with a reversible door so that is may open from either left or right. It is best to reposition the door hinge as necessary at the outset since it is inconvenient to do so later.

To change the door hinge please refer to the diagram below and proceed as follows:—

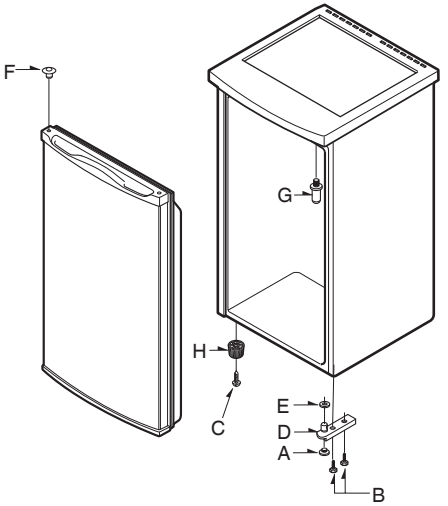

1. Remove all loose fittings from inside the appliance.
2. Carefully lay the appliance on its back on the original packing (You will need assistance to achieve this). Take care not to damage the pipework by keeping it clear of the floor.
3. Unscrew and remove the Adjustable Foot (A).
4. Remove the Lower Hinge (D) by unscrewing the 2xBolts (B).
5. Remove the Leg (H) by unscrewing the bolt fixing it (C).
6. Gently pull the door downwards to remove it.
7. Before refitting the door, swap the Hinge Cap (F) by prising it from its current location and repositioning it on the other side of the door. Care should be taken not to damage the adjacent surfaces when removing the Hinge Cap.
8. Unscrew the Upper Hinge pin (G) and screw it into the opposite side hole in the top of the cabinet.
9. Now secure the Lower Hinge (D) to the cabinet using the 2xBolts (B).
10. Replace the Adjustable Foot (A), setting it at approximately 20mm.
11. Carefully stand the appliance up, (you will need assistance to do this), and position it in its permanent location.
12. Check that the door opens and closes easily. Ensure that the door seal does not bind on the hinge side creating gaps which would allow air into the interior. Adjust the hinges if necessary.

This appliance should be stood on a firm, level floor with sufficient space for free airflow around it. (At least 10mm all round and, subject to location, 20mm beneath the worksurface). Avoid positions close to walls or corners. There must be sufficient room for free ventilation particularly at the back. The unit should be located away from direct heat sources, such as cookers, radiators and direct sunlight. If the unit is positioned where the temperature is too low, condensation will form on the outside of the cabinet. Normal room temperature is recommended.

Avoid locations which may be affected by draughts or dampness as this will impair the efficiency of the product

BEFORE CALLING FOR SERVICE

SERVICE CALLS CAN OFTEN BE AVOIDED!
IF YOU FEEL YOUR REFRIGERATOR IS NOT OPERATING PROPERLY, CHECK THESE POSSIBLE CAUSES FIRST :

PROBLEM	POSSIBLE CAUSES
REFRIGERATOR DOES NOT OPERATE	• Has a house fuse blown or circuit breaker tripped? • Has the power cord plug been removed or loosened from the electrical wall outlet?
TEMPERATURE TOO WARM	• Temperature control not set on proper position. • Appliance is placed close to wall or heat source. • Warm weather-frequent door openings. • Door left open for a long time. • Large amount of foods are kept in the refrigerator.
ABNORMAL NOISE(S)	• Refrigerator is installed in a weak or uneven place or leveling screw needs adjusting. • Unnecessary objects placed in the back side of the refrigerator.
REFRIGERATOR HAS ODOR	• Foods with strong odors should be tightly covered or wrapped. • Interior needs cleaning.
DEW FORMS ON THE CABINET SURFACE	• Not unusual during periods of high humidity. • Door may have been left ajar.