LG
Life's Good

OWNER'S MANUAL
LCD TV / LED LCD TV

Please read this manual carefully before operating your set and retain it for future reference.

CS41**
LS310*
LS311*
LS315*
LS33**
LS30**

P/NO : MFL67452102 (1206-REV03)
Printed in Korea

www.lg.com

ENGLISH

TABLE OF CONTENTS

2 TABLE OF CONTENTS

3 LICENSES

3 OPEN SOURCE SOFTWARE NOTICE

4 SAFETY INSTRUCTIONS

10 INSTALLATION PROCEDURE

10 ASSEMBLING AND PREPARING

10 Unpacking
15 Parts and buttons
16 Lifting and moving the TV
17 Setting up the TV
21 Mounting on a table
23 Mounting on a wall
24 Tidying cables
24 Not using the Desk-Type Stand

25 MAKING CONNECTIONS

25 Antenna connection
26 Adapter connection
26 HDMI connection
27 Component connection
27 Composite connection
28 USB connection
28 Audio System connection
28 - External Stereo Connection

29 REMOTE CONTROL

30 WATCHING TV

30 Turning the TV on for the first time
30 Watching TV
30 Managing programmes
30 - Automatically setting up programme
31 - Manually setting up programme
32 - Editing your programme list
32 - Selecting a programme on the programme list
32 - Using favourite programmes
33 Using additional options
33 - Adjusting aspect ratio
34 - Using the input list

35 ENTERTAINMENT

35 Connecting USB storage devices
36 Browsing files
37 Viewing photos
38 Listening to music

40 CUSTOMIZING TV SETTING

40 Accessing main menus
40 Customizing Settings
40 - SETUP Settings
41 - PICTURE Settings
43 - AUDIO Settings
45 - TIME Settings
45 - OPTION Settings

46 TELETEXT

46 Switch On/Off
46 Simple Text
46 - Page selection
46 - Programming a colour button in LIST mode
46 Fastext
46 - Page selection
47 Special Teletext Function

48 MAINTENANCE

48 Cleaning your TV
48 - Screen, frame, cabinet and stand
48 - Power cord

48 TROUBLESHOOTING

50 SPECIFICATIONS

WARNING

- If you ignore the warning message, you may be seriously injured or there is a possibility of accident or death.

CAUTION

- If you ignore the caution message, you may be slightly injured or the product may be damaged.

NOTE

- The note helps you understand and use the product safely. Please read the note carefully before using the product.

LICENSES

Supported licenses may differ by model. For more information about licenses, visit *www.lg.com*.

HDMI, the HDMI logo and High-Definition Multimedia Interface are trademarks or registered trademarks of HDMI Licensing LLC.

OPEN SOURCE SOFTWARE NOTICE

To obtain the source code under GPL, LGPL, MPL and other open source licenses, that is contained in this product, please visit *http://opensource.lge.com* .
In addition to the source code, all referred license terms, warranty disclaimers and copyright notices are available for download.
LG Electronics will also provide open source code to you on CD-ROM for a charge covering the cost of performing such distribution (such as the cost of media, shipping and handling) upon email request to opensource@lge.com. This offer is valid for three (3) years from the date on which you purchased the product.

ENGLISH

SAFETY INSTRUCTIONS

Please read these safety precautions carefully before using the product.

WARNING

- Do not place the TV and remote control in the following environments:
  - A location exposed to direct sunlight
  - An area with high humidity such as a bathroom
  - Near any heat source such as stoves and other devices that produce heat
  - Near kitchen counters or humidifiers where they can easily be exposed to steam or oil
  - An area exposed to rain or wind
  - Near containers of water such as vases

  Otherwise, this may result in fire, electric shock, malfunction or product deformation.

- Do not place the product where it might be exposed to dust.
  This may cause a fire hazard.

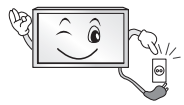

- Mains plug is the disconnecting device. The plug must remain readily operable.

- Do not touch the power plug with wet hands. Additionally, if the cord pin is wet or covered with dust, dry the power plug completely or wipe dust off.
  You may be electrocuted due to excess moisture.

- Make sure to connect the power cable to the grounded current. (Except for devices which are not grounded.)
  You may be electrocuted or injured.

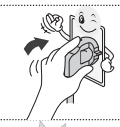

- Fix the power cable completely.
  If the power cable is not fixed completely, a fire can break out.

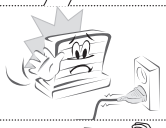

- Ensure the power cord does not come into contact with hot objects such as a heater.
  This may cause a fire or an electric shock hazard.

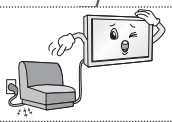

- Do not place a heavy object, or the product itself, on power cables.
  Otherwise, this may result in fire or electric shock.

- Bend antenna cable between inside and outside building to prevent rain from flowing in.
  This may cause water damaged inside the Product and could give an electric shock.

- When mounting a TV it on the wall, make sure not to install TV by hanging power and signal cables on the back of the TV.
  It may cause fire, electric shock.

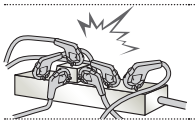

- Do not plug too many electrical devices into a single multiple electrical outlet. Otherwise, this may result in fire due to over-heating.

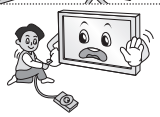

- Do not drop the product or let it fall over when connecting external devices. Otherwise, this may result in injury or damage to the product.

- Keep the packing anti-moisture material or vinyl packing out of the reach of children.
  Anti-moisture material is harmful if swallowed. If swallowed by mistake, force the patient to vomit and visit the nearest hospital. Additionally, vinyl packing can cause suffocation. Keep it out of the reach of children.

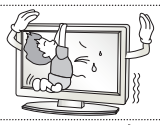

- Do not let your children climb or cling onto the TV.
  Otherwise, the TV may fall over, which may cause serious injury.

- Dispose of used batteries carefully to protect a child from eating them.
  Please seek Doctor- Medical Attention immediately if child consumes batteries.

- Do not insert any metal objects/conductors (like a metal chopstick/cutlery screwdriver) between power cable plug and input Wall Socket while it is connected to the input terminal on the wall. Additionally, do not touch the power cable right after plugging into the wall input terminal.
  You may be electrocuted.(Depending on model)

- Do not put or store inflammable substances near the product. There is a danger of combustion/explosion or fire due to careless handling of the inflammable substances.

- Do not drop metallic objects such as coins, hair pins, chopsticks or wire into the product, or inflammable objects such as paper and matches. Children must pay particular attention.
  Electrical shock, fire or injury can occur. If a foreign object is dropped into the product, unplug the power cord and contact the service centre.

- Do not spray water on the product or scrub with an inflammable substance (thinner or benzene). Fire or electric shock accident can occur.

- Do not allow a impact shock or any objects to fall into the product, and do not drop onto the screen with something.
  You may be injured or the product can be damaged.

- Never touch this product or antenna during a thunder or lighting storm.
  You may be electrocuted.

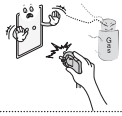

- Never touch the wall outlet when there is leakage of gas, open the windows and ventilate.
  It may cause a fire or a burn by a spark.

- Do not disassemble, repair or modify the product at your own discretion.
  Fire or electric shock accident can occur.
  Contact the service center for check, calibration or repair.

- If any of the following occur, unplug the product immediately and contact your local service centre.
  - The product has been impacted by shock
  - The product has been damaged
  - Foreign objects have entered the product
  - The product produced smoke or a strange smell

  This may result in fire or electric shock.

- If you don’t intend to use the product for a long time, unplug the power cable from the product.
  Covering dust can cause a fire, or insulation deterioration can cause electric leakage, electric shock or fire.

- Apparatus shall not be exposed to dripping or splashing and no objects filled with liquids, such as vases, shall be placed on the apparatus.

CAUTION

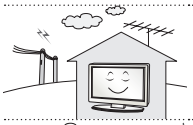

- Install the product where no radio wave occurs.

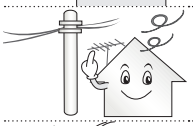

- There should be enough distance between an outside antenna and power lines to keep the former from touching the latter even when the antenna falls.
  This may cause an electric shock.

- Do not install the product on places such as unstable shelves or inclined surfaces. Also avoid places where there is vibration or where the product cannot be fully supported.
  Otherwise, the product may fall or flip over, which may cause injury or damage to the product.

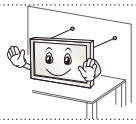

- If you install the TV on a stand, you need to take actions to prevent the product from overturning. Otherwise, the product may fall over, which may cause injury.

- If you intend to mount the product to a wall, attach VESA standard mounting interface (optional parts) to the back of the product. When you install the set to use the wall mounting bracket (optional parts), fix it carefully so as not to drop.
- Only use the attachments / accessories specified by the manufacturer.

- When installing the antenna, consult a qualified service man.
  This may create a fire hazard or an electric shock hazard.

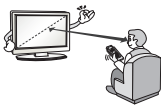

- We recommend that you maintain a distance of at least 2 to 7 times the diagonal screen size when watching TV.
  If you watch TV for a long period of time, this may cause blurred vision.

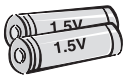

- Only use the specified type of battery.
  This could cause damage to the remote control.

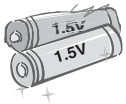

- Do not mix new batteries with old batteries.
  This may cause the batteries to overheat and leak.

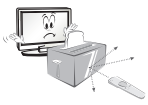

- Make sure there are no objects between the remote control and its sensor.

- Signal from the remote control may be disturbed by sun light or other strong light.
  In this case, darken the room.

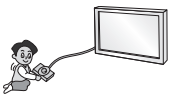

- When connecting external devices such as video game consoles, make sure the connecting cables are long enough.
  Otherwise, the product may fall over, which may cause injury or damage the product.

- Do not turn the product On/Off by plugging-in or unplugging the power plug to the wall outlet. (Do not use the power plug for switch.)
  It may cause mechanical failure or could give an electric shock.

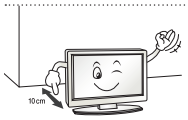

- Please follow the installation instructions below to prevent the product from overheating.
  - The distance between the product and the wall should be more than 10 cm.
  - Do not install the product in a place with no ventilation (e.g., on a bookshelf or in a cupboard).
  - Do not install the product on a carpet or cushion.
  - Make sure the air vent is not blocked by a tablecloth or curtain.

  Otherwise, this may result in fire.

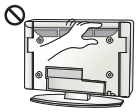

- Take care not to touch the ventilation openings when watching the TV for long periods as the ventilation openings may become hot. This does not affect the operation or performance of the product.

- Periodically examine the cord of your appliance, and if its appearance indicates damage or deterioration, unplug it, discontinue use of the appliance, and have the cord replaced with an exact replacement part by an authorized servicer.

- Prevent dust collecting on the power plug pins or outlet.
  This may cause a fire hazard.

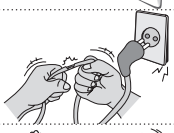

- Protect the power cord from physical or mechanical abuse, such as being twisted, kinked, pinched, closed in a door, or walked upon. Pay particular attention to plugs, wall outlets, and the point where the cord exits the appliance.

- Do not press strongly upon the panel with a hand or sharp object such as nail, pencil or pen, or make a scratch on it.

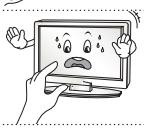

- Avoid touching the screen or holding your finger(s) against it for long periods of time. Doing so may produce some temporary distortion effects on the screen.

- When cleaning the product and its components, unplug the power first and wipe it with a soft cloth. Applying excessive force may cause scratches or discolouration. Do not spray with water or wipe with a wet cloth. Never use glass cleaner, car or industrial shiner, abrasives or wax, benzene, alcohol etc., which can damage the product and its panel.
  Otherwise, this may result in fire, electric shock or product damage (deformation, corrosion or breakage).

- As long as this unit is connected to the AC wall outlet, it is not disconnected from the AC power source even if you turn off this unit by SWITCH.

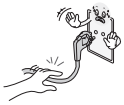

- When unplugging the cable, grab the plug and unplug it.
  If the wires inside the power cable are disconnected, this may cause fire.

- When moving the product, make sure you turn the power off first. Then, unplug the power cables, antenna cables and all connecting cables.
  The TV set or power cord may be damaged, which may create a fire hazard or cause electric shock.

- When moving or unpacking the product, work in pairs because the product is heavy.
  Otherwise, this may result in injury.

- Contact the service center once a year to clean the internal parts of the product. Accumulated dust can cause mechanical failure.

- Refer all servicing to qualified service personnel. Servicing is required when the apparatus has been damaged in any way, such as power supply cord or plug is damaged, liquid has been spilled or objects have fallen into the apparatus, the apparatus has been exposed to rain or moisture, does not operate normally, or has been dropped.

- If the product feels cold to the touch, there may be a small “flicker” when it is turned on. This is normal, there is nothing wrong with product.

- The panel is a high technology display product with resolution of two million to six million pixels. You may see tiny black dots and/or brightly coloured dots (red, blue or green) at a size of 1 ppm on the panel. This does not indicate a malfunction and does not affect the performance and reliability of the product.
  This phenomenon also occurs in third-party products and is not subject to exchange or refund.

- You may find different brightness and colour of the panel depending on your viewing position(left/right/top/down).
  This phenomenon occurs due to the characteristic of the panel. It is not related with the product performance, and it is not malfunction.

- Displaying a still image (e.g., broadcasting channel logo, on-screen menu, scene from a video game) for a prolonged time may cause damage to the screen, resulting in retention of the image, which is known as image sticking. The warranty does not cover the product for image sticking.
  Avoid displaying a fixed image on your television’s screen for a prolonged period (2 or more hours for LCD, 1 or more hours for Plasma).
  Also, if you watch the TV at a ratio of 4:3 for a long time, image sticking may occur on the borders of the panel.
  This phenomenon also occurs in third-party products and is not subject to exchange or refund.
- **Generated Sound**
  “Cracking” noise: A cracking noise that occurs when watching or turning off the TV is generated by plastic thermal contraction due to tempera-ture and humidity. This noise is common for products where thermal deformation is required. Electrical circuit humming/panel buzzing: A low level noise is generated from a high-speed switching circuit, which supplies a large amount of current to operate a product. It varies depend-ing on the product.
  This generated sound does not affect the performance and reliability of the product.

NOTE

- Image shown may differ from your TV.
- Your TV's OSD (On Screen Display) may differ slightly from that shown in this manual.
- The available menus and options may differ from the input source or product model that you are using.
- New features may be added to this TV in the future.
- The TV can be placed in standby mode in order to reduce the power consumption. And the TV should be turned off if it will not be watched for some time, as this will reduce energy consumption.
- The energy consumed during use can be significantly reduced if the level of brightness of the picture is reduced, and this will reduce the overall running cost.

INSTALLATION PROCEDURE

1 Open the package and make sure all the accessories are included.
2 Attach the stand to the TV set.
3 Connect an external device to the TV set.

ASSEMBLING AND PREPARING

Unpacking

Check your product box for the following items. If there are any missing accessories, contact the local dealer where you purchased your product. The illustrations in this manual may differ from the actual product and item.

CAUTION

- Do not use any unapproved items to ensure the safety and product life span.
- Any damages or injuries by using unapproved items are not covered by the manufacturer's warranty.
- Some models have a thin film attached on to the screen and this must not be removed.

NOTE

- The items supplied with your product may vary depending on the model.
- Product specifications or contents of this manual may be changed without prior notice due to upgrade of product functions.
- For an optimal connection, HDMI cables and USB devices should have bezels less than 10 mm thick and 18 mm width. Use an extension cable that supports USB 2.0 if the USB cable or USB memory stick does not fit into your TV's USB port.

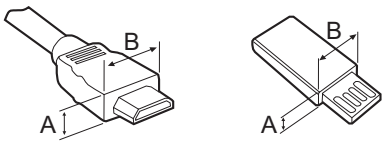

*A ≦ 10 mm
*B ≦ 18 mm

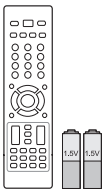	**Remote control and batteries (AAA)** (See p. 29)	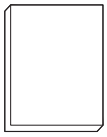	**Owner's manual**
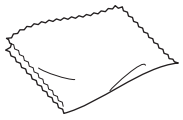	**Polishing cloth** (Depending on model) Use this to remove dust from the cabinet.		**Screw for assembly** 2EA, P4 x 16 (Only 22CS41**, 19/22LS33**) (See p. 17, 19)
	Screw for assembly 8EA, M4 x 20 (Only 26/32/42CS41**, 32/42LS310*, 32/42LS311*) (See p. 18)		**Screw for assembly** 2EA, M4 x 14 (Only 26LS33**) (See p. 17)
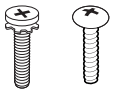	**Screw for assembly** 4EA, M4 x 14 4EA, P4 x 16 (Only 32LS33**, 42LS315*) (See p. 17, 20)	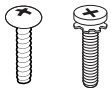	**Screw for assembly** 4EA, P4 x 16 4EA, M4 x 20 (Only 32LS30**) (See p. 20)
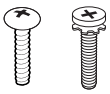	**Screw for assembly** 2EA, P4 x 16 4EA, M4 x 20 (Only 32LS315*) (See p. 19)		**Screw for fixing** (Only 26/32/42CS41**, 32/42LS310*, 32/42LS311* 32LS33**,32/42LS315*, 32LS30**) (See p. 21)
	Power Cord		**Adapter** (Only 19/22/26LS33**) (See p. 26)
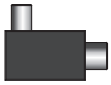 or 	**Isolator** (Depending on model) (See p. 13)	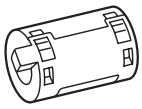	**Ferrite core** (Depending on model) (See p. 13)
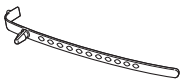	**Cable holder** (Depending on model) (See p. 24)	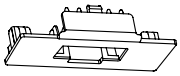	**Protection cover** (Only 26CS41**) (See p. 24)
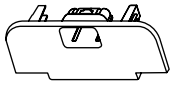	**Protection cover** (Only 32CS41**, 32LS310*, 32LS311*) (See p. 24)	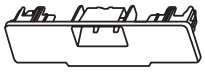	**Protection cover** (Only 42CS41**, 42LS310*, 42LS311*) (See p. 24)
	Protection cover (Only 32LS30**) (See p. 24)	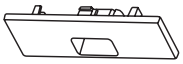	**Protection cover** (Only 32LS315*) (See p. 24)

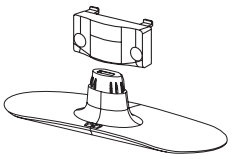

Stand Body / Stand Base
(Only 19/22/26LS33**)
(See p. 17)

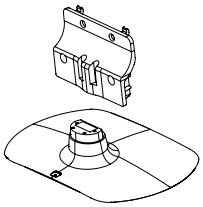

Stand Body / Stand Base
(Only 32LS33**)
(See p. 17)

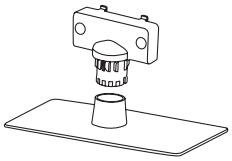

Stand Body / Stand Base
(Only 22CS41**)
(See p. 19)

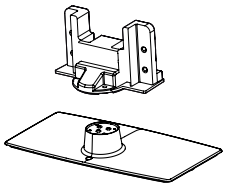

Stand Body / Stand Base
(Only 26CS41**)
(See p. 18)

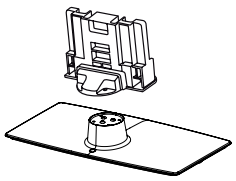

Stand Body / Stand Base
(Only 32/42LS310*, 32/42LS311*, 32/42CS41**)
(See p. 18)

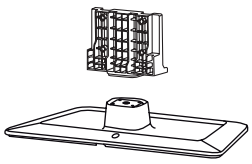

Stand Body / Stand Base
(Only 32LS315*)
(See p. 19)

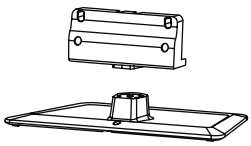

Stand Body / Stand Base
(Only 42LS315*)
(See p. 20)

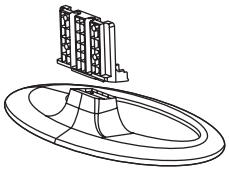

Stand Body / Stand Base
(Only 32LS30**)
(See p. 20)

NOTE

- Antenna Isolator Installation Guide
  - Use this to install TV in a place where there is a voltage difference between TV Set and GND of antenna signal.
    - » If there is a voltage difference between TV Set and GND of antenna signal, the antenna contact might be heated and excessive heat might cause an accident.
  - You can improve the safety when watching TV by efficiently removing power voltage from TV antenna. It is recommended to mount the isolator to the wall. If it cannot be mounted to the wall, mount it on the TV. Avoid disconnecting the antenna Isolator after installation.
  - Before starting, be sure that the TV antenna is connected.

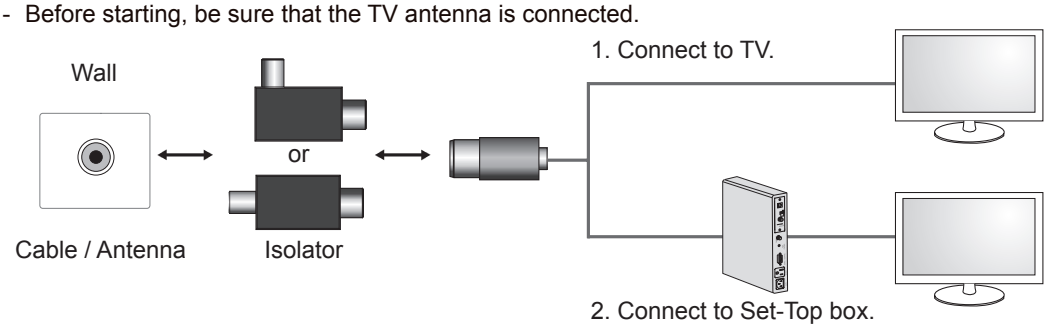

Connect one end of the isolator to cable/antenna jack and the other to TV set or set-top box.

“Equipment connected to the protective earthing of the building installation through the mains connection or through other equipment with a connection to protective earthing - and to a cable distribution system using coaxial cable, may in some circumstances create a fire hazard. Connection to a cable distribution system has therefore to be provided through a device providing electrical isolation below a certain frequency range (galvanic isolator, see EN 60728-11)”

When applying the RF Isolator, a slight loss of signal sensitivity can occur.

NOTE

- The items supplied with your product may vary depending on the model.
- Product specifications or contents of this manual may be changed without prior notice due to upgrade of product functions.

How to use the ferrite core

A ferrite core is used to reduce electromagnetic waves when the power cord is connected to the power outlet. Put the ferrite core on the power cord as shown in the figure below by splitting it apart. It is better to place the ferrite core as close to the TV and the power plug as possible.

[to a wall plug]

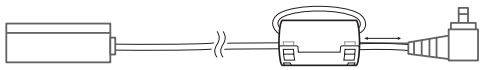

[to the TV]

[Figure]

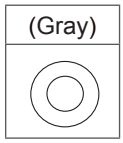

[Cross Section of Ferrite Core]

CAUTION

- Power Cord Installation Guide
  - If the power cord provided with TV looks like the below picture, please ensure that it is inserted in the right direction.

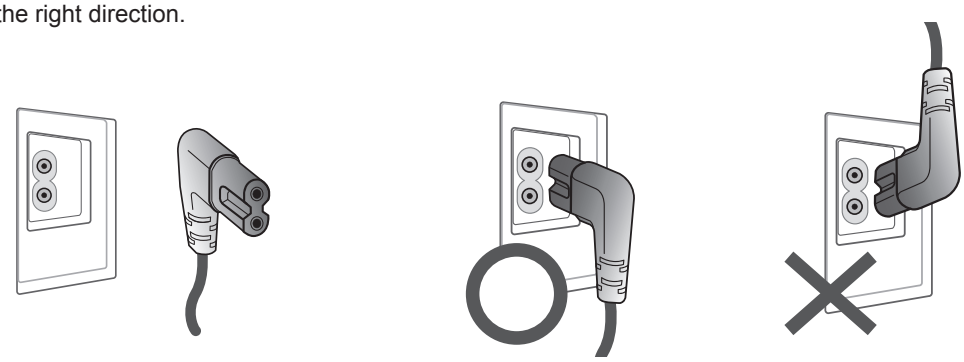

TV Power Cord Correct Wrong

Parts and buttons

A type : 22/26/32/42CS41**, 19/22/26/32LS33**, 32/42LS310*, 32/42LS311*

B type : 32/42LS315*, 32LS30**

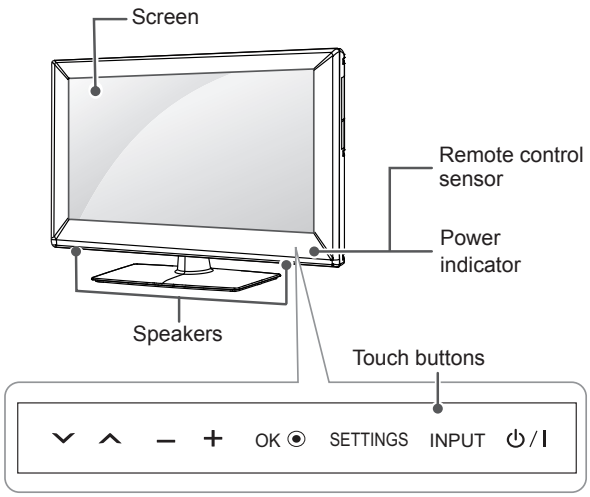

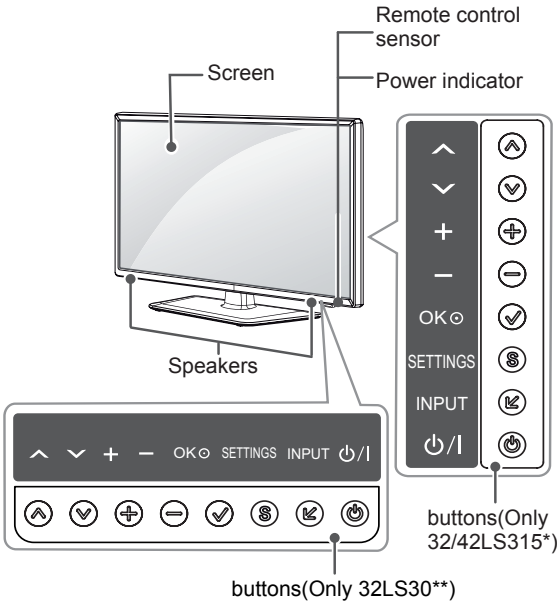

Button		Description
A type[1]	B type	
∨ ∧	∧ ∨	Scrolls through the saved programmes.
− +	+ −	Adjusts the volume level.
OK ◉	✓	Selects the highlighted menu option or confirms an input.
SETTINGS	**S**	Accesses the main menu, or saves your input and exits the menus.
INPUT	↙	Changes the input source.
⏻ / I	⏻	Turns the power on or off.

1 A type buttons are touch sensitive and can be operated through simple touch with your finger.

ENGLISH

Lifting and moving the TV

When moving or lifting the TV, read the following to prevent the TV from being scratched or damaged and for safe transportation regardless of its type and size.

CAUTION

- Avoid touching the screen at all times, as this may result in damage to the screen.

- It is recommended to move the TV in the box or packing material that the TV originally came in.
- Before moving or lifting the TV, disconnect the power cord and all cables.
- When holding the TV, the screen should face away from you to avoid damage.

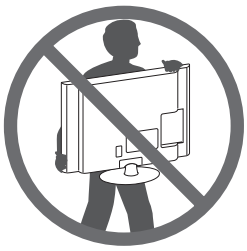

- Hold the top and bottom of the TV frame firmly. Make sure not to hold the transparent part, speaker, or speaker grill area.

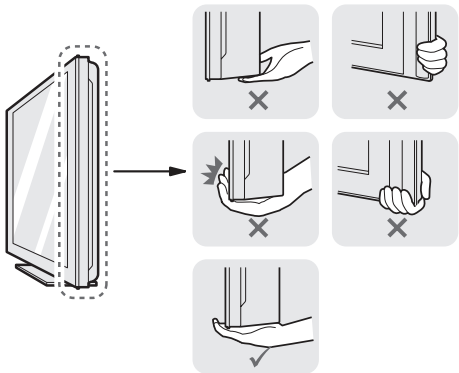

- When transporting a large TV, there should be at least 2 people.
- When transporting the TV by hand, hold the TV as shown in the following illustration.

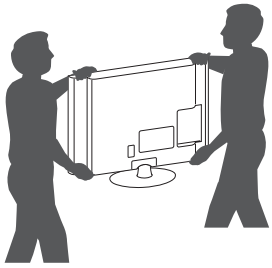

- When transporting the TV, do not expose the TV to jolts or excessive vibration.
- When transporting the TV, keep the TV upright, never turn the TV on its side or tilt towards the left or right.

Setting up the TV

Image shown may differ from your TV.

19/22/26LS33**

1

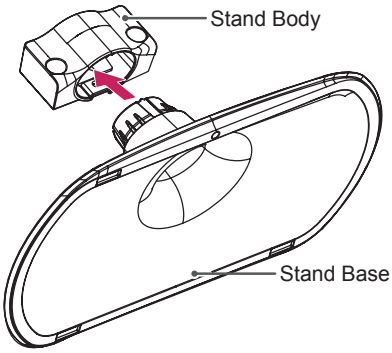

2

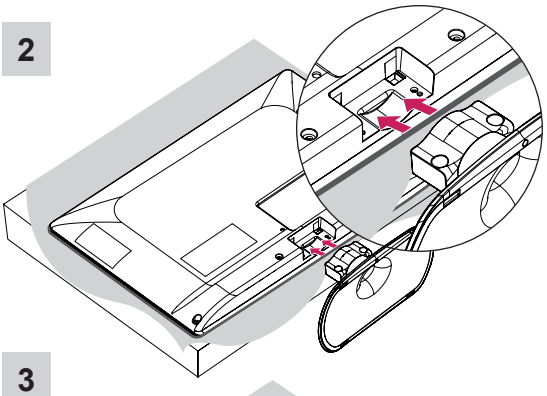

3

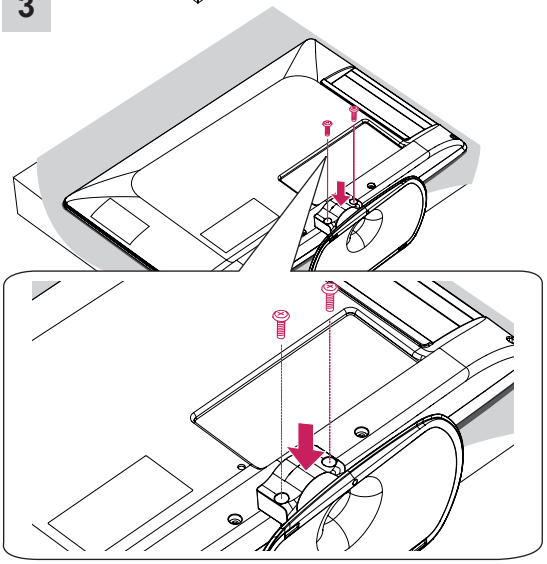

Model	19/22LS33**		26LS33**	
Standard screw	P4 x 16		M4 x 14	
Number of screws	2EA		2EA	

32LS33**

1

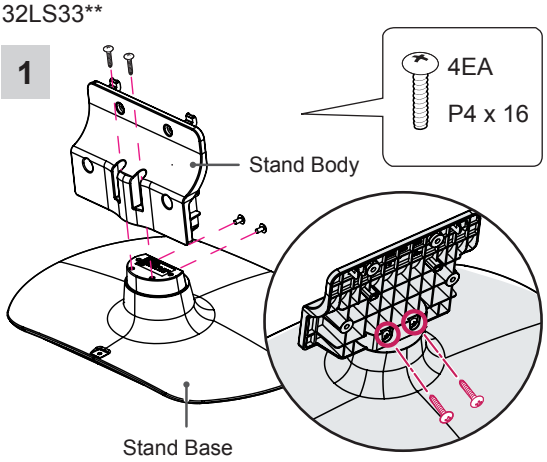

2

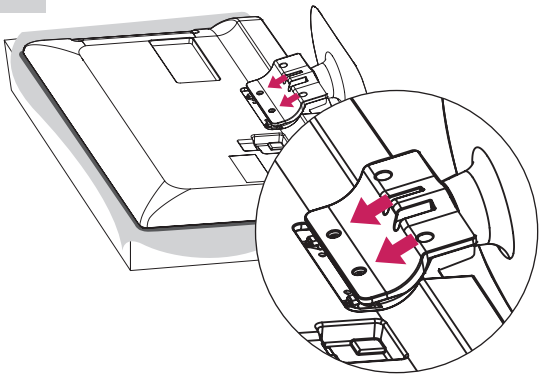

3

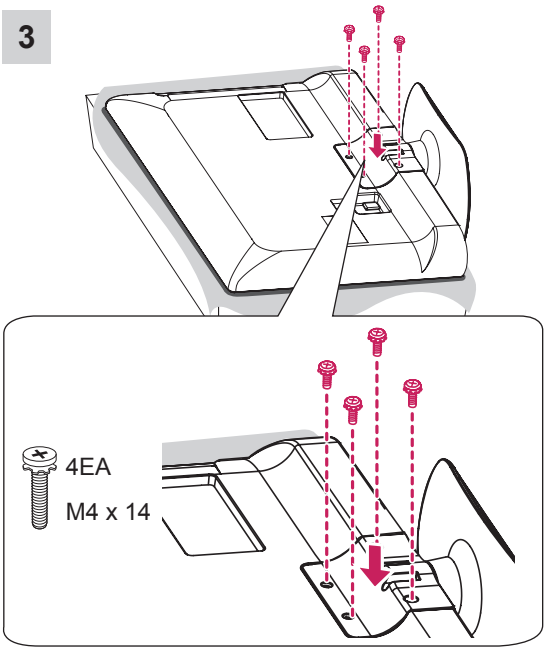

ENGLISH

26CS41**

1

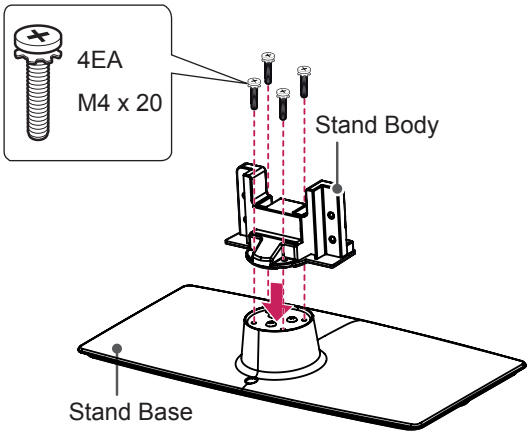

2

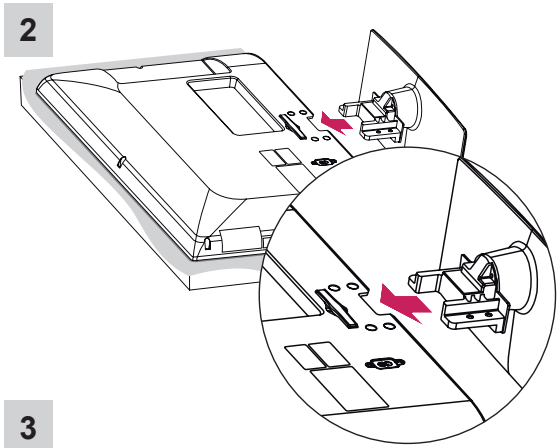

3

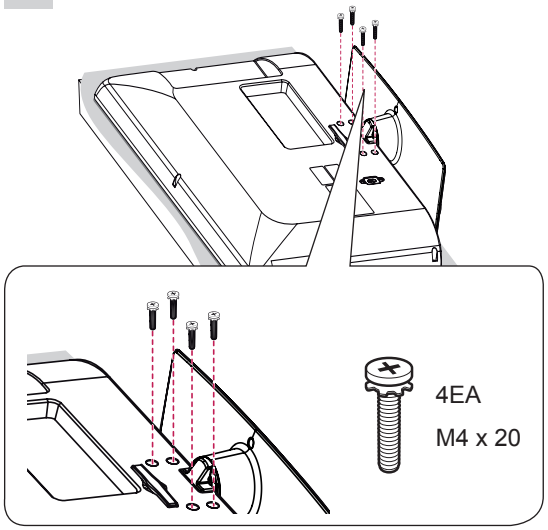

32/42CS41**, 32/42LS310*, 32/42LS311*

1

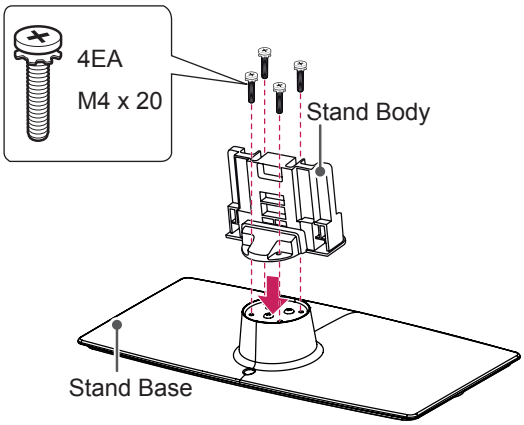

2

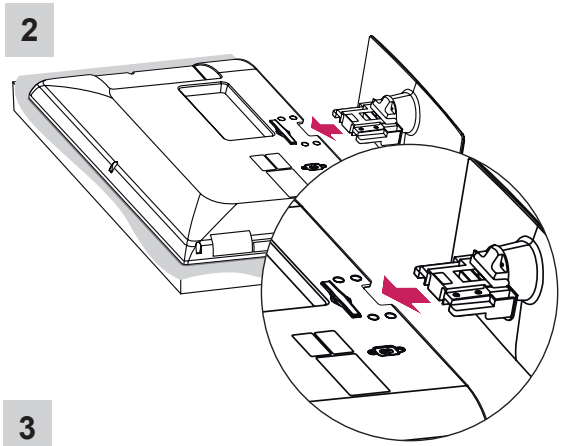

3

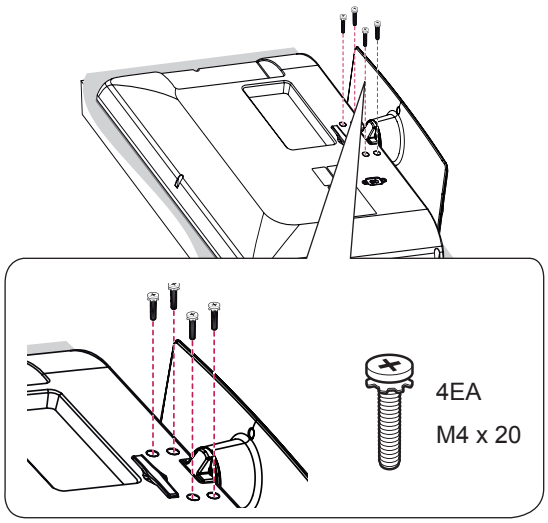

22CS41**

1

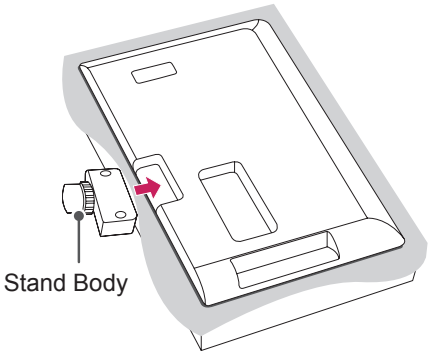

2

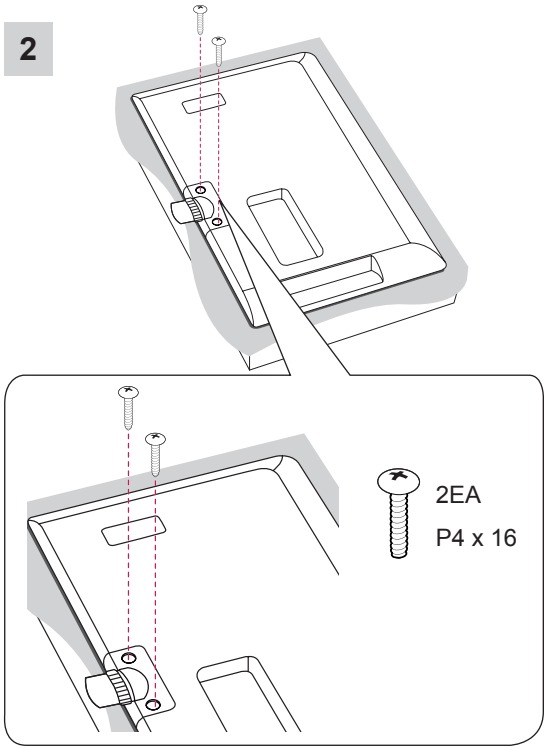

3

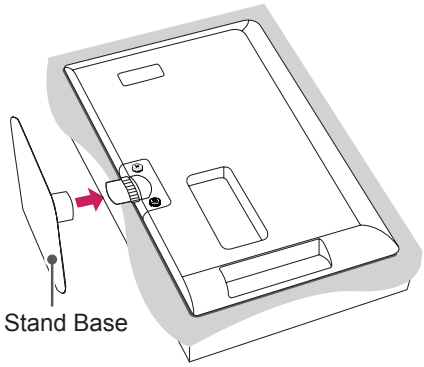

32LS315*

1

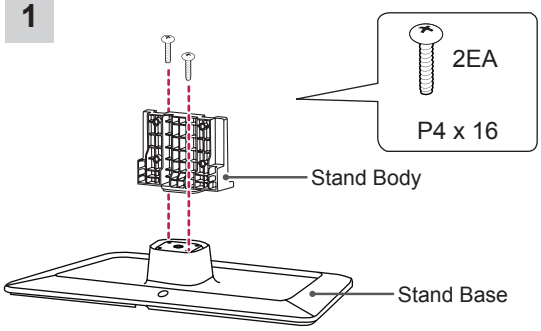

2

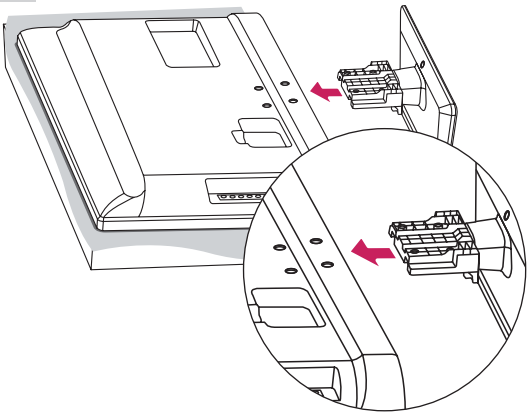

3

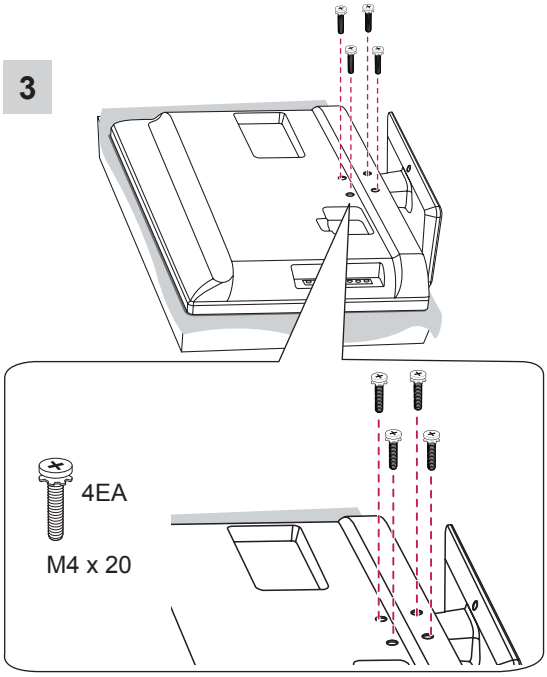

42LS315*

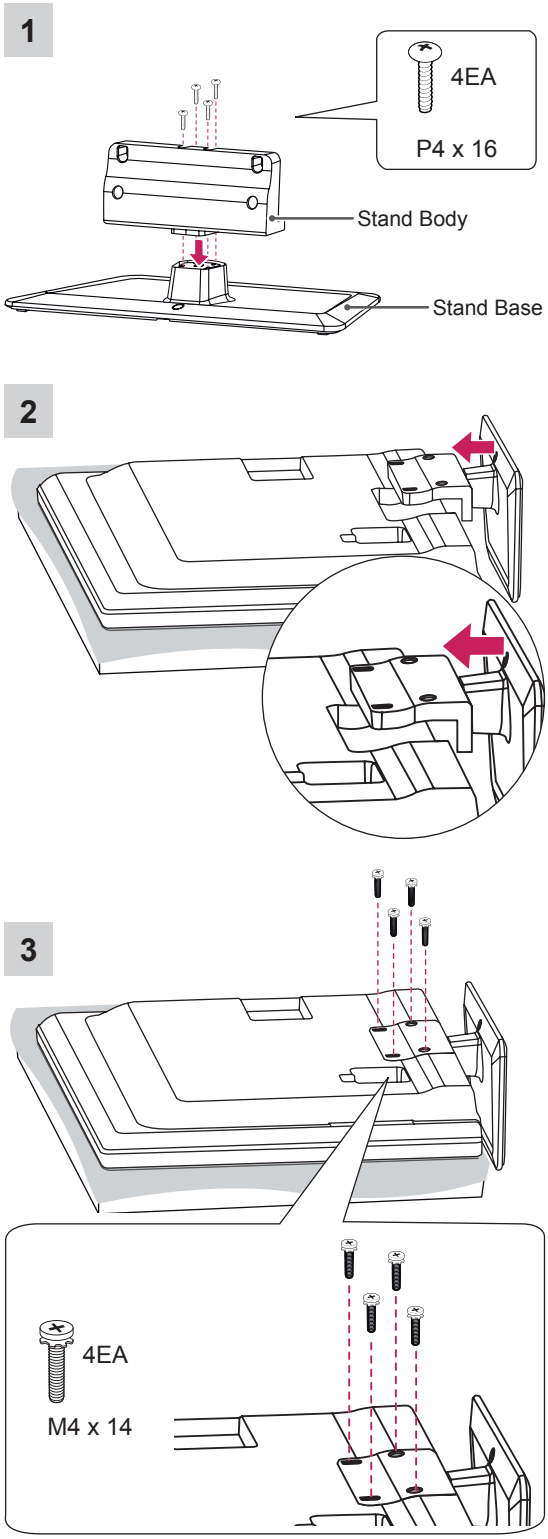

32LS30**

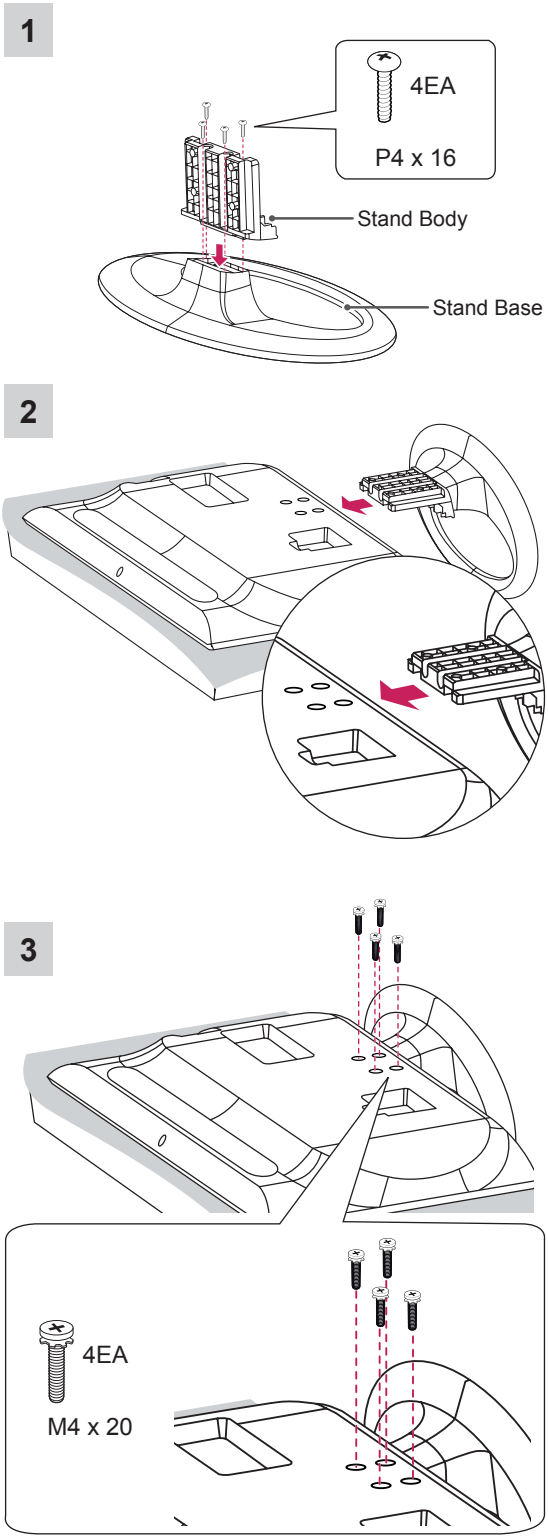

CAUTION

- When attaching the stand to the TV set, place the screen facing down on a cushioned table or flat surface to protect the screen from scratches.
- Make sure that the screws are inserted correctly and fastened securely. (If they are not fastened securely enough, the TV may tilt forward after being installed.)
  Do not use too much force and over tighten the screws; otherwise screw may be damaged and not tighten correctly.

NOTE

- Remove the stand before installing the TV on a wall mount by performing the stand attachment in reverse.

Mounting on a table

1 Lift and tilt the TV into its upright position on a table.
  - Leave a 10 cm (minimum) space from the wall for proper ventilation.

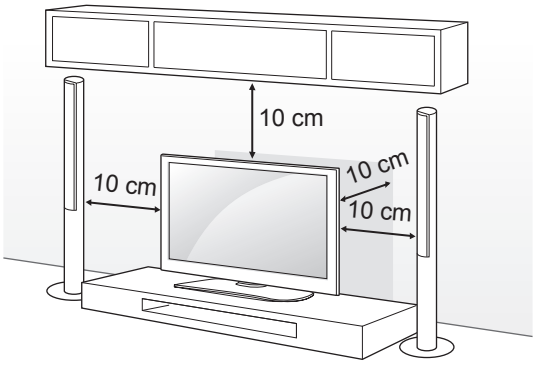

2 Connect the power cord to a wall outlet.

CAUTION

- Do not place the TV near or on sources of heat, as this may result in fire or other damage.

Adjusting the angle of the TV to suit view

(Only 32/42CS41**, 32/42LS310*, 32/42LS311*)
Swivel 20 degrees to the left or right and adjust the angle of the TV to suit your view.

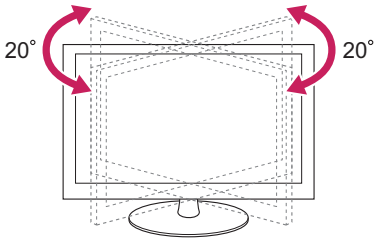

CAUTION

- When adjusting the angle of the product, watch out for your fingers.
- » Personal injury may occur if hands or fingers are pinched. If the product is tilted too much, it may fall, causing damage or injury.

Securing the TV to a table

(Only 32/42LS310*, 32/42LS311*, 26/32/42CS41**, 32LS33**,32/42LS315*, 32LS30**)
Fix the TV to a table to prevent from tilting forward, damage, and potential injury.
To secure the TV to a table, insert and tighten the supplied screw on the rear of the stand.

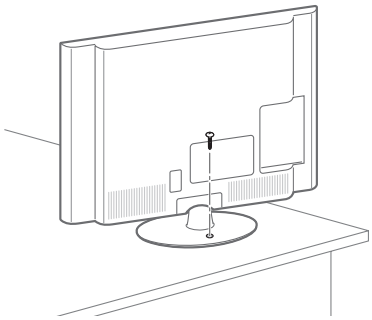

WARNING

- To prevent TV from falling over, the TV should be securely attached to the floor/ wall per installation instructions. Tipping, shaking, or rocking the TV may cause injury.

Securing the TV to a wall

(This feature is not available for all models.)

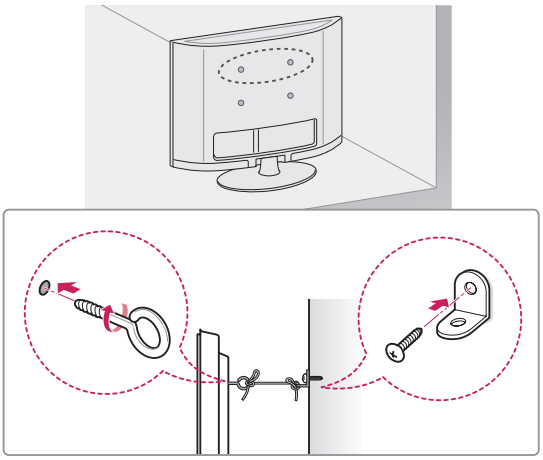

1 Insert and tighten the eye-bolts, or TV brackets and bolts on the back of the TV.
   - If there are bolts inserted at the eye-bolts position, remove the bolts first.
2 Mount the wall brackets with the bolts to the wall.
   Match the location of the wall bracket and the eye-bolts on the rear of the TV.
3 Connect the eye-bolts and wall brackets tightly with a sturdy rope.
   Make sure to keep the rope horizontal with the flat surface.

CAUTION

- Make sure that children do not climb on or hang on the TV.

NOTE

- Use a platform or cabinet that is strong and large enough to support the TV securely.
- Brackets, bolts and ropes are not provided. You can obtain additional accessories from your local dealer.

Using the Kensington security system

(Depending on model)

The Kensington security system connector is located at the rear of the TV. For more information of installation and using, refer to the manual provided with the Kensington security system or visit http://www.kensington.com.

Connect the Kensington security system cable between the TV and a table.

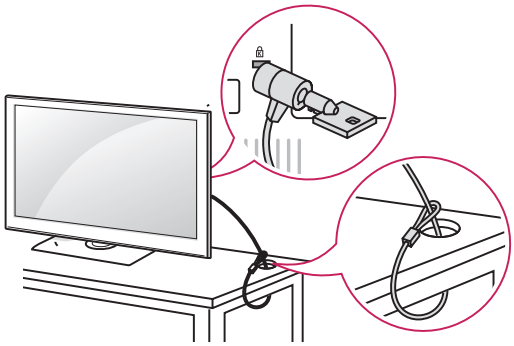

Mounting on a wall

Attach an optional wall mount bracket at the rear of the TV carefully and install the wall mount bracket on a solid wall perpendicular to the floor. When you attach the TV to other building materials, please contact qualified personnel. LG recommends that wall mounting be performed by a qualified professional installer.

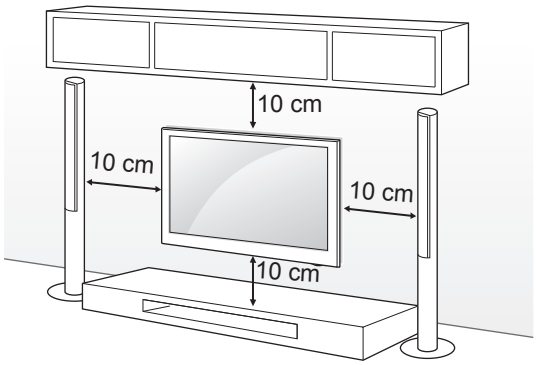

Make sure to use screws and wall mount bracket that meet the VESA standard. Standard dimensions for the wall mount kits are described in the following table.

Separate purchase(Wall Mounting Bracket)

Model	22CS41** 19/22/26LS33**	32LS310* 32LS311* 26/32CS41** 32LS33** 32LS315* 32LS30**
VESA (A x B)	100 x 100	200 x 100
Standard screw	M4	M4
Number of screws	4	4
Wall mount bracket	LSW100B 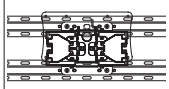	LSW100B 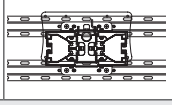
Model	42LS310* 42LS311* 42CS41** 42LS315*	
VESA (A x B)	200 x 200	
Standard screw	M6	
Number of screws	4	
Wall mount bracket	LSW200BX 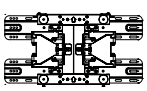	LSW220BX 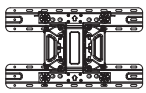

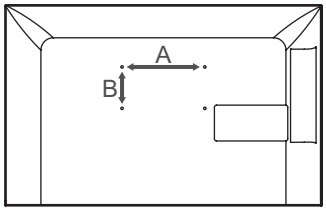

CAUTION

- Disconnect the power first, and then move or install the TV. Otherwise electric shock may occur.
- If you install the TV on a ceiling or slanted wall, it may fall and result in severe injury. Use an authorized LG wall mount and contact the local dealer or qualified personnel.
- Do not over tighten the screws as this may cause damage to the TV and void your warranty.
- Use the screws and wall mounts that meet the VESA standard. Any damages or injuries by misuse or using an improper accessory are not covered by the manufacturer's warranty.

NOTE

- Use the screws that are listed on the VESA standard screw specifications.
- The wall mount kit includes an installation manual and necessary parts.
- The wall mount bracket is not provided. You can obtain additional accessories from your local dealer.
- The length of screws may differ depending on the wall mount. Make sure to use the proper length.
- For more information, refer to the manual supplied with the wall mount.

Tidying cables

Gather and bind the cables with the Cable Holder.
(Only19LS33**)

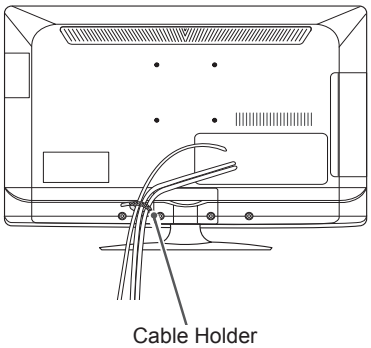

(Only 22/26LS33**)

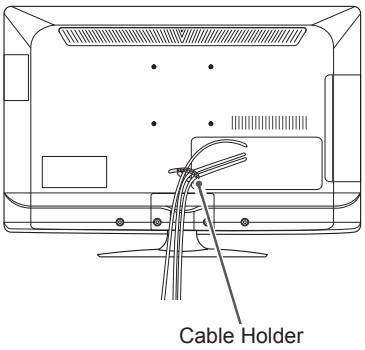

(Only 32LS33**, 32/42LS315*, 32LS30**)

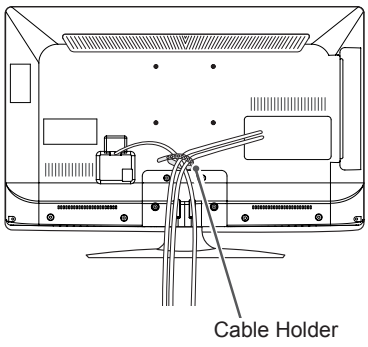

CAUTION

- Do not move the TV by holding the cable holder, as the cable holders may break, and injuries and damage to the TV may occur.

(Only 26/32/42CS41**, 32/42LS310*, 32/42LS311*)

1 Gather and bind the cables with the Cable Management.

2 Fix the cable management firmly to the TV.

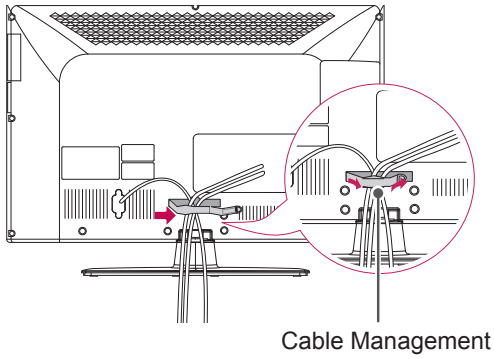

CAUTION

- Do not move the TV by holding the cable management, as the cable management may break, and injuries and damage to the TV may occur.

Not using the Desk-Type Stand

(Only 26/32/42CS41**, 32/42LS310*, 32/42LS311*, 32LS315*, 32LS30**)

- When installing the wall mounting bracket, use the **Protection cover**. This will protect the opening from accumulating dust and dirt.

Push the supplied protection cover into the opening at the bottom of the TV until it locks in place.

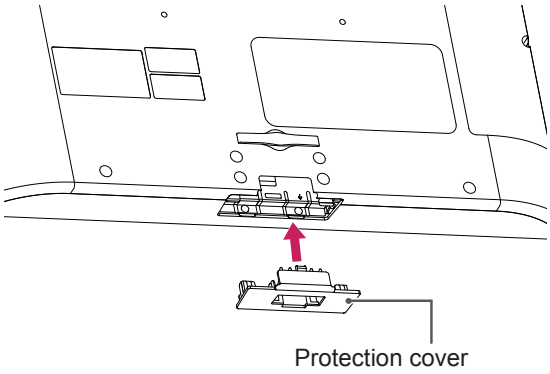

MAKING CONNECTIONS

This section on **MAKING CONNECTIONS** mainly uses diagrams for the CS41** models.

Connect various external devices to the TV and switch input modes to select an external device. For more information of external device's connection, refer to the manual provided with each device.
Available external devices are: HD receivers, DVD players, VCRs, audio systems, USB storage devices, gaming devices, and other external devices.

NOTE

- The external device connection may differ from the model.
- Connect external devices to the TV regardless of the order of the TV port.
- If you record a TV program on a DVD recorder or VCR, make sure to connect the TV signal input cable to the TV through a DVD recorder or VCR. For more information of recording, refer to the manual provided with the connected device.
- Refer to the external equipment's manual for operating instructions.
- If you connect a gaming device to the TV, use the cable supplied with the gaming device.

Antenna connection

Connect the TV to a wall antenna socket with an RF cable (75 Ω).

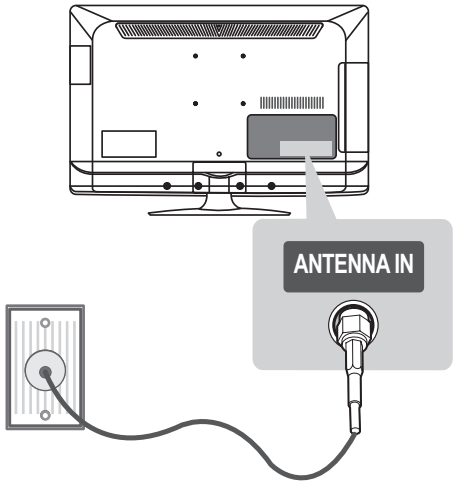

NOTE

- Use a signal splitter to use more than 2 TVs.
- If the image quality is poor, install a signal amplifier properly to improve the image quality.
- If the image quality is poor with an antenna connected, try to realign the antenna in the correct direction.
- An antenna cable and converter are not supplied.

ENGLISH

Adapter connection

(Only 19/22/26LS33**)

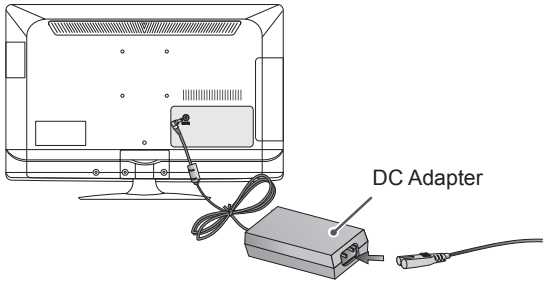

1 Connect the antenna cable to the antenna input port on the TV.
2 Connect the DC adapter plug to the power input jack on the TV.
3 Connect the power cord to the DC adapter first, then plug the power cord into the wall power outlet.

CAUTION

- Please be sure to connect the TV to the DC power adapter before connecting the TV's power plug to a wall power outlet.

HDMI connection

Transmits the digital video and audio signals from an external device to the TV. Connect the external device and the TV with the HDMI cable as shown.

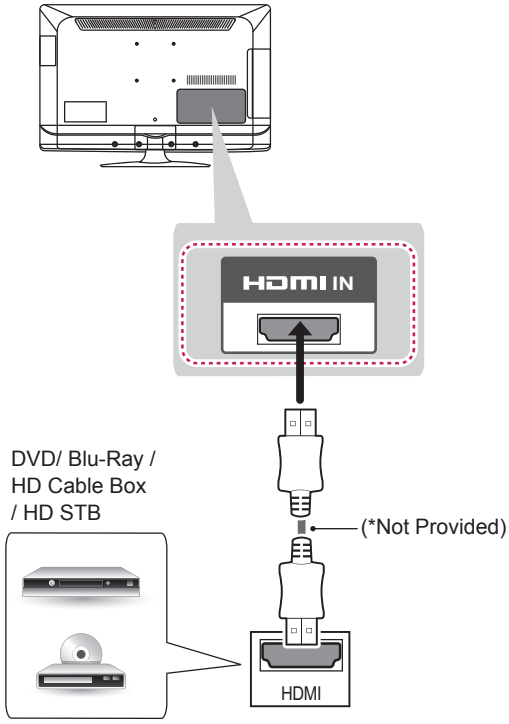

NOTE

- It is recommended to use the TV with the HDMI connection for the best image quality.
- High Speed HDMI™ Cables are tested to carry an HD signal up to 1080p and higher.
- Supported HDMI Audio format : PCM (32k/44.1k/48k, DTS Not supported.)

Component connection

Transmits analog video and audio signals from an external device to the TV. Connect the external device and the TV with a component cable as shown.

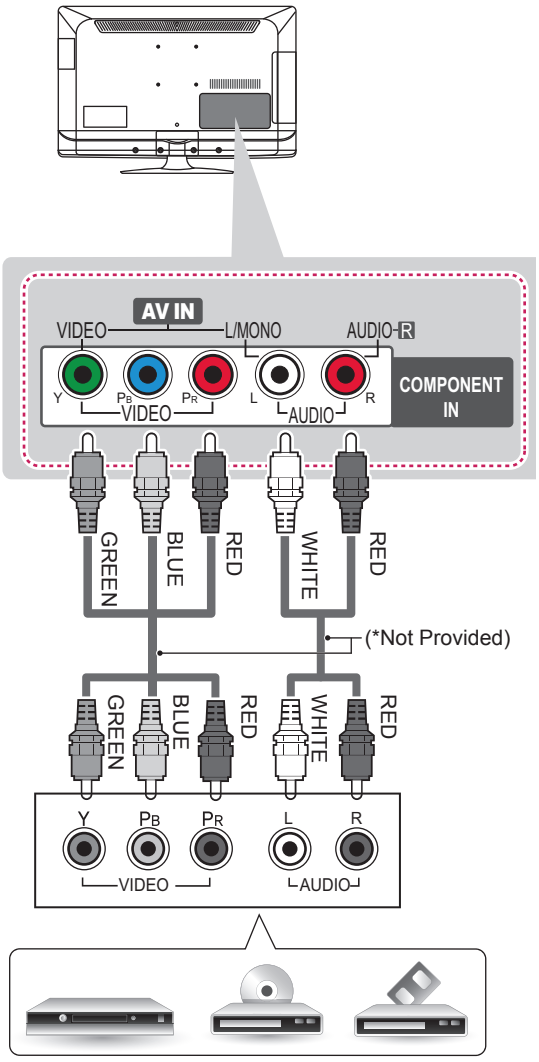

DVD / Blu-Ray / HD Cable Box

Composite connection

Transmits analog video and audio signals from an external device to the TV. Connect the external device and the TV with th e composite cable as shown.

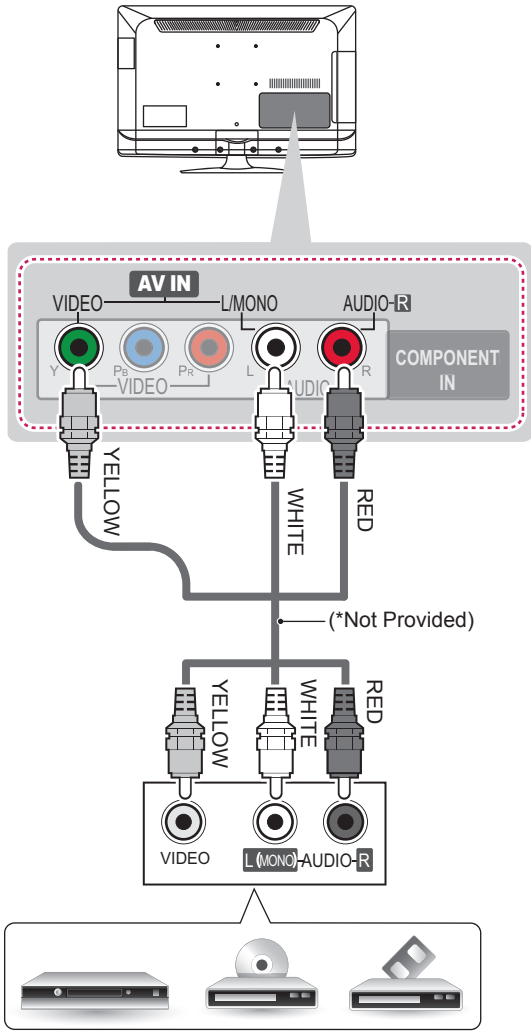

VCR / DVD / Blu-Ray / HD Cable Box

NOTE

- If cables are not installed correctly, it could cause this image to display in black and white or with distorted colours.

USB connection

Connect a USB storage device such as a USB flash memory or a USB memory card reader to the TV.

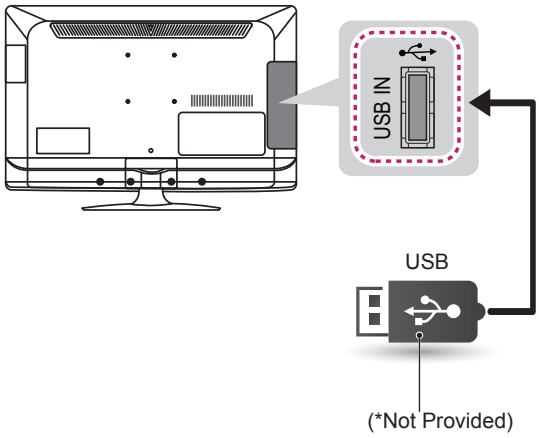

Audio System connection

Use an external audio system instead of the built-in speaker.

External Stereo Connection

Use to connect to an external amplifier, or surround sound system.

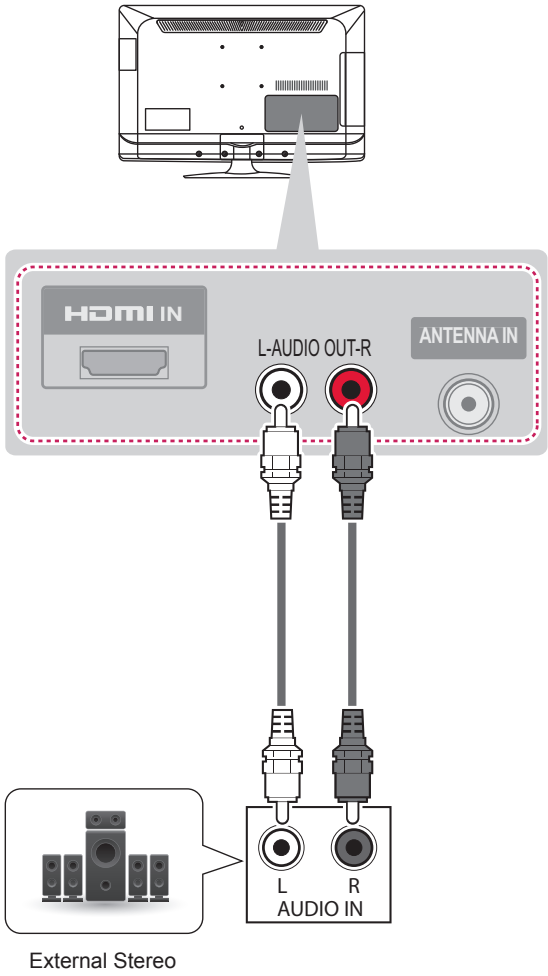

ENGLISH

REMOTE CONTROL

The descriptions in this manual are based on the buttons on the remote control.
Please read this manual carefully and use the TV correctly.
To replace batteries, open the battery cover, replace batteries (1.5 V AAA) matching the ⊕ and ⊖ ends to the label inside the compartment, and close the battery cover.
To remove the batteries, perform the installation actions in reverse.

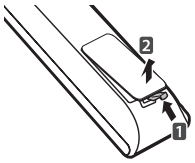

CAUTION

- Do not mix old and new batteries, as this may damage the remote control.
- In Analogue TV and some countries, some remote control buttons may not work.

Make sure to point the remote control toward the remote control sensor on the TV.

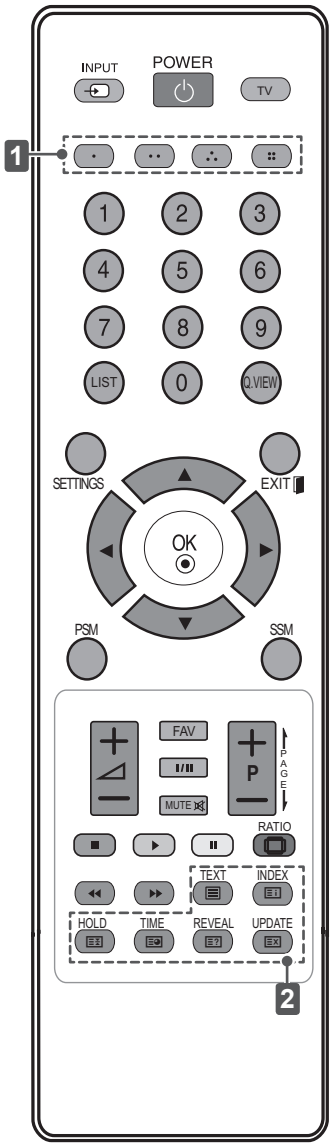

⏻ (POWER)	Turns the TV on or off.
TV	Returns to the TV viewing from any mode.
INPUT	Changes the input source.
1 Coloured buttons	These access special functions in some menus. (: Red, : Green, : Yellow, : Blue)
0 to 9 number buttons	Selects a programme. Selects numbered items in a menu.
LIST	Accesses the saved programme list.
Q.VIEW	Returns to the previously viewed programme.
SETTINGS	Accesses the main menus.
EXIT	Clears all on-screen displays and return to TV viewing.
Navigation buttons (up/down/left/right)	Scrolls through menus or options.
OK	Selects menus or options and confirms your input.
PSM	Recalls your preferred picture setting.
SSM	Recalls your preferred sound setting.
◿ + −	Adjusts the volume level.
FAV	Accesses your favourite programme list.
I/II	Selects the sound output.
MUTE	Mutes all sounds.
P + −	Scrolls through the saved programmes.
PAGE	Moves to the previous or next screen.
Control buttons (■, ▶, II, ◀◀, ▶▶)	Controls the USB menus.
RATIO	Resizes an image.
2 TELETEXT BUTTONS	These buttons are used for teletext. For further details, see the 'Teletext' section.

ENGLISH

WATCHING TV

Turning the TV on for the first time

When you turn the TV on for the first time, the Initial setting screen appears. Select a language and customize the basic settings.

1 Connect the power cord to a power outlet.

2 In Standby mode, press ⏻(POWER) to turn the TV on.
The Initial setting screen appears if you turn the TV on for the first time.

NOTE

- You can also access **Factory Reset** by accessing Option menu.

3 Follow the on-screen instructions to customize your TV settings according to your preferences.

Language	Selects a language to display.
⇩	
Auto Tuning	Scans and saves available programmes automatically.

4 When the basic settings are complete, press **OK**.

NOTE

- If you do not complete the Initial setting, it will appear whenever the TV turns on.
- Disconnect the power cord from the power outlet when you do not use the TV for a long period of time.

5 To turn the TV off, press ⏻**(POWER)**.

Watching TV

1 In Standby mode, press ⏻**(POWER)** to turn the TV on.

2 Press **INPUT** and select **TV**.

3 To turn the TV off, press ⏻**(POWER)**.
The TV switches to Standby mode.

Managing programmes

Automatically setting up programme

Use this to automatically find and store all available programmes.

1 Press **SETTINGS** and the Navigation buttons to scroll to **SETUP**.

2 Press the Navigation buttons to scroll to **Auto Tuning**.

3 Select **To Set** and press the Navigation buttons to scroll to **System.** Select your desired system.

4 Press the Navigation buttons to scroll to **Storage From** and select the initial programme number.

5 Press the Navigation buttons to scroll to **Search** and select To Start to begin auto tuning.
The TV scans and saves available programmes automatically.

6 When you return to the previous menu, press **SETTINGS**.

Manually setting up programme

Manual Tuning lets you manually tune and arrange the stations in whatever order you desire.

1 Press **SETTINGS** and the Navigation buttons to scroll to **SETUP**.
2 Press the Navigation buttons to scroll to **Manual Tuning**.
3 Press the Navigation buttons to scroll to **Storage**.
4 Press the Navigation buttons or Number buttons to select the desired programme number.
5 Press the Navigation buttons to scroll to **System**.
6 Press the Navigation buttons to scroll to **TV System**.
7 Press the Navigation buttons to scroll to **Band**.
8 Press the Navigation buttons to scroll to **V/UHF** or **Cable**.
9 Press the Navigation buttons to scroll to **Channel**.
Press the Navigation buttons and then select the desired programme number with the Navigation buttons or Number buttons.
10 Press the Navigation buttons to scroll to **Search**.
11 Press the Navigation buttons to scroll and start Searching**.**
12 Press the **OK** to store it.
13 When you return to the previous menu, press **SETTINGS**.

NOTE

- To store another programme, repeat steps 3 to 11.

Assigning a station name

You can assign a station name with five characters to each programme number.

1 Press **SETTINGS** and the Navigation buttons to scroll to **SETUP**.
2 Press the Navigation buttons to scroll to **Manual Tuning**.
3 Press the Navigation buttons to scroll to **Name**.
4 Press the Navigation buttons to scroll to select the position and make your choice of the second character, and so on. You can use an the alphabet A to Z, the number 0 to 9, +/ -, and blank and press **OK**.
5 Press the **OK** to store it.
6 When you return to the previous menu, press **SETTINGS**.

Fine Tuning

Normally fine tuning is only necessary if reception is poor.

1 Press **SETTINGS** and the Navigation buttons to scroll to **SETUP**.
2 Press the Navigation buttons to scroll to **Manual Tuning**.
3 Press the Navigation buttons to scroll to **Fine**.
4 Press the Navigation buttons to fine tune for the best picture and sound.
5 Press the **OK** to store it.
6 When you return to the previous menu, press **SETTINGS**.

ENGLISH

Editing your programme list

When a programme number is skipped, it means that you will be unable to select it using **P + –** button during TV viewing.
If you wish to select the skipped programme, directly enter the programme number with the NUMBER buttons or select it in the Programme edit menu.
This function enables you to skip the stored programmes.

1 Press **SETTINGS** and the Navigation buttons to scroll to **SETUP**.
2 Press the Navigation buttons to scroll to **Programme Edit**.
3 Select **To Set** and edit programmes using the following buttons.

Button	Description
Red button	Deletes a programme. Press the Red button twice. The selected programme is deleted, all the following programmes are shifted up one position.
Green button	Moves a programme. Press the Green button again to release this function.
Blue button	Selects a programme number to be skipped. Press the Blue button again to release the skipped programme.

4 When you return to the previous menu, press **SETTINGS**.

Selecting a programme on the programme list

1 Press **LIST** to access the programme list.
2 Press the Navigation buttons to select to desired programme and press **OK**.
3 When you return to the previous menu, press **LIST**.

NOTE

- You may find some blue programmes. They have been set up to be skipped by auto programming or in the programme edit mode.
- Some programmes with the channel number shown in the programme list indicate there is no station name assigned.

Using favourite programmes

Add the programmes that you watch frequently to the favourite list.

1 Press **SETTINGS** and the Navigation buttons to scroll to **SETUP**.
2 Press the Navigation buttons to scroll to **Favourite Programme**.
3 Press the Navigation buttons and the Number buttons to select to the desired programme.
4 To store another programme, repeat steps 3. You can store up to 8 programmes.
5 When you return to the previous menu, press **SETTINGS**.

NOTE

- Press Yellow button to access directly to the stored Favourite Programme. Press the Yellow button again to shift the stored Favourite Programme.

Using additional options

Adjusting aspect ratio

Resize an image to view at its optimal size by pressing **RATIO** while you are watching TV.

NOTE

- You can also change the image size by accessing **Aspect Ratio** in the **PICTURE** menus.
- You can adjust the enlarge proportion using the Navigation buttons.

- **16:9**: Resizes images to fit the screen width. (This function works in RF/AV/Component/ HDMI/USB Mode.)

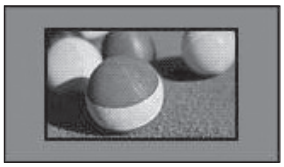

- **Original**: When your TV receives a wide screen signal it will automatically change to the picture format broadcasted. (This function works in RF/AV Mode.)

- **4:3**: Resizes images to the previous standard 4:3. (This function works in RF/AV/Component/ HDMI Mode.)

- **14:9** : You can view a picture format of 14:9 or a general TV programme in the 14:9 mode. The 14:9 screen is viewed in the same way as in 4:3, but is moved to the up and down. (This function works in RF/AV Mode.)

- **Zoom 1** : The following selection will allow you to view the picture without any alteration, while filling the entire screen. However, the top and bottom of the picture will be cropped. (This function works in RF/AV Mode.)

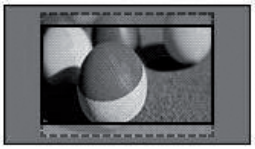

- **Zoom 2** : Choose Zoom 2 when you wish the picture to be altered, both horizontally extended and vertically cropped. The picture adopting a compromise between alteration and screen coverage. (This function works in RF/AV Mode.)

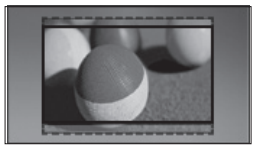

- **Just Scan**: Displays video images in the original size without removing parts of the edge of the image. (This function works in Component/HDMI (720P/1080i/1080p) Mode.)

NOTE

- If you enlarge or reduce an image, the image may be distorted.

ENGLISH

Using the input list

Selecting an input source

1 Press **INPUT** to access the input sources.
- The connected device displays on each input source.

2 Press the Navigation buttons or input button to scroll to one of the input sources and press **OK**.

- Image shown may differ from your TV.

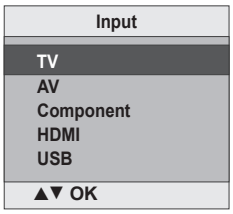

Input source	Description
TV	Watch TV over the air and digital cable broadcast.
AV	Watch video from a VCR or other external devices.
Component	Select it when using the DVD or the Digital set-top box depends on connector.
HDMI	Watch video from a HTS or other high definition devices.
USB	Select it when using USB depends on connector.

ENTERTAINMENT

(Depending on model)

- Image shown may differ from your TV.

Connecting USB storage devices

Connect USB storage devices such as a USB flash memory to the TV and use multimedia features (See “Browsing files” on page 36). Connect a USB flash memory or USB memory card reader to the TV as shown on the following illustration.

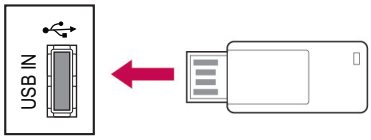

CAUTION

- Back up your files saved on a USB storage device frequently, as you may lose or damage the files and this may be not covered by the manufacturer’s warranty.

Tips for using USB storage devices

- Only a USB storage device is recognizable.
- If the USB storage device is connected through a USB hub, the device is not recognizable.
- A USB storage device using an automatic recognition programme may not be recognized.
- A USB storage device which uses its own driver may not be recognized.
- The recognition speed of a USB storage device may depend on each device.
- Please do not turn off the TV or unplug the USB device when the connected USB storage device is working. When such device is suddenly separated or unplugged, the stored files or the USB storage device may be damaged.
- Please do not connect the USB storage device which was artificially manoeuvred on the PC. The device may cause the product to malfunction or fail to be played. Never forget to use only a USB storage device which has normal music files, image files.
- Please use only a USB storage device which was formatted as a FAT16 or FAT32 file system.
- Please connect a USB storage device with the cable offered by the device maker.
- Some USB storage devices may not be supported or operated smoothly.
- Be sure to back up important files since data stored in a USB memory device may be damaged. We will not be responsible for any data loss.
- If a USB memory device is connected to a USB multi-card reader, its volume data may not be detected.
- If the USB memory device does not work properly, disconnect and reconnect it.
- How fast a USB memory device is detected differs from device to device.
- The recommended capacity is 32 GB or less for USB memory.
- Any device with more than the recommended capacity may not work properly.
- USB storage devices below USB 2.0 are supported as well. But they may not work properly in the movie list.
- Maximum of 999 folders or files can be recognized under one folder.
- If there are a lot of folders or files all within one folder, the device may not be able to access these properly.

ENGLISH

Browsing files

Access the photo or music lists and browse files.

1 Connect a USB storage device.
2 Press **INPUT** button to scroll to **Input menus**.
3 Press the Navigation buttons to scroll to **USB** and press **OK**.
4 Press the Navigation buttons to scroll to **Photo List** or **Music List** and press **OK**.

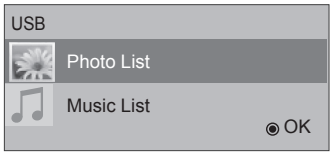

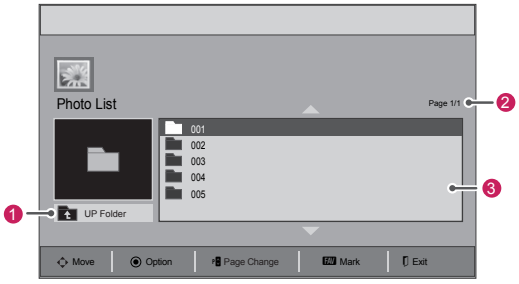

No.	Description
1	Moves to upper level folder
2	Current page/Total pages
3	Contents under the current folder
Button	**Description**
FAV	Marks or Unmarks each file.

Supported file format

Type	Supported file format
Photo	JPEG Baseline : 64 x 64 to 8192 x 8192 Progressive : 64 x 64 to 1024 x 768 • You can play JPEG files only. • Non-supported files are displayed in the form of predefined icon.
Music	MP3 Bit rate 32kbps to 320kbps • Sampling rate MPEG1 Layer3 : 32 kHz, 44.1 kHz, 48 kHz • Sampling rate MPEG2 Layer3 : 16 kHz, 22.05 kHz, 24 kHz • Sampling rate MPEG2.5 Layer3 : 8 kHz, 11.025 kHz, 12 kHz

Viewing photos

View image files saved in a USB storage device. The displays on the screen may differ from the model.

1 Press **INPUT** button to access the Input menus.
2 Press the Navigation buttons to scroll to **USB** and press **OK**.
3 Press the Navigation buttons to scroll to **Photo List** and press **OK**.
4 Press the Navigation buttons to scroll to a folder you want and press **OK**.
5 Press the Navigation buttons to scroll to a file you want and press **OK**.

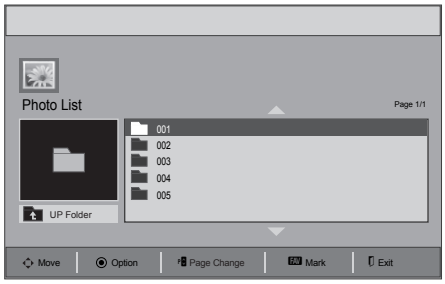

6 View photos.

Menu	Description
View Marked	Display the selected photo file.
Mark All	Mark all photo files on the screen.
Unmark All	Deselect all marked photo files.

NOTE

- Non-supported files are displayed the preview image by icon only ⚠.
- Abnormal files are displayed in the form of bitmap ⊗.

Using photo options

Use the following options while viewing photos.

Option	Description
Slideshow	Starts or stops a slideshow with selected photos. If there are no selected photos, all photos saved in the current folder display during a slideshow. To set a slideshow speed, select **Option**.
BGM	Turns the background music on or off. To set the background music folder, select **Option**.
↻ (Rotate)	Rotates photos clockwise (90°, 180°, 270°, 360°). **NOTE** • The supported photo size is limited. You cannot rotate a photo if the resolution of the rotated width is larger than the supported resolution size.
Option	• **Slide Speed**: Selects a slideshow speed (**Fast**, **Medium**, **Slow**). • **BGM**: Selects a music folder for the background music. **NOTE** • You cannot change the music folder while the background music is playing. • You can only select the MP3 folder saved on the device that currently displays the photo.
Close	The option bar at the bottom of the screen disappears.

ENGLISH

Listening to music

1 Press **INPUT** button to access the Input menus.

2 Press the Navigation buttons to scroll to **USB** and press **OK**.

3 Press the Navigation buttons to scroll to **Music List** and press **OK**.

4 Press the Navigation buttons to scroll to a folder you want and press **OK**.

5 Press the Navigation buttons to scroll to a file you want and press **OK**.

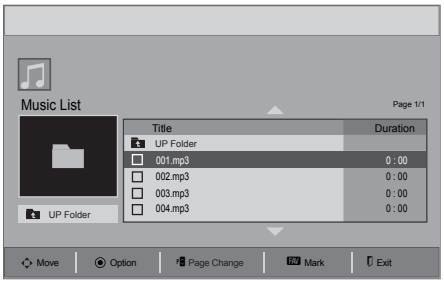

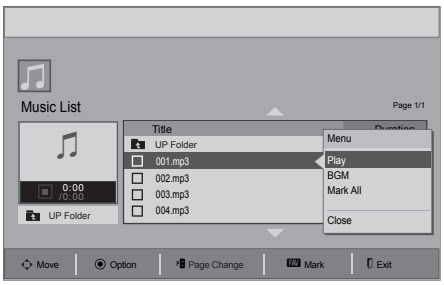

Menu	Description
Play	Plays a music file.
BGM	Start playing the selected music files and then move to the **Photo List**.
Mark All	Mark all music files on the screen.

6 Play music.

7 Control playback by using the following buttons.

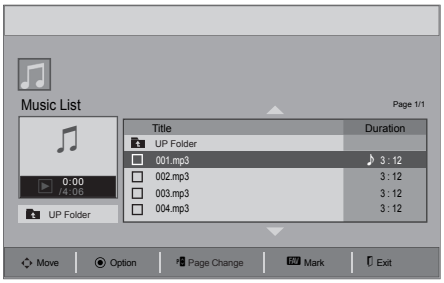

Button	Description
■	Stops playback
▶	Plays a music file
❚❚	Pauses or resumes playback
▶▶	Skips to the next file
◀◀	Skips to the previous file
◀◀ or ▶▶	When playing, When you press the ◀◀ button, the previous music file will be played. When you press the ▶▶ button, the next music file will be played.
EXIT	When you press the **EXIT** button, only the music will be stopped and the player will not return to normal TV viewing.
∧ or ∨	When using the ∧ or ∨ button during playback a cursor indicating the position can be played.

Tips for playing music files

- This unit cannot support the ID3 Tag embedded MP3 files.

NOTE

- Abnormal files are displayed in the form of bitmap ⊗.
- A damaged or corrupted music does not play but displays 00:00 in playtime.
- A music downloaded from a paid service with copyright protection does not start but displays inappropriate information in playtime.
- If you press OK button, screen saver is stopped.
- The PLAY(▶), Pause(II), ■ , ▶▶, ◀◀ buttons on the remote control are also available in this mode.
- You can use the ▶▶ button to select the next music and the ◀◀ button to select the previous music.

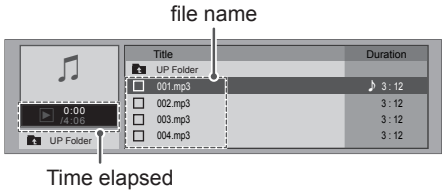

ENGLISH

CUSTOMIZING TV SETTING

- Image shown may differ from your TV.

Accessing main menus

1 Press **SETTINGS** to access the main menus.
2 Press the Navigation buttons to scroll to one of the following menus and press **OK**.
3 Press Navigation buttons to scroll to the setting or option you want and press **OK**.
4 When you are finished, press **EXIT**.

Menu		Description
	SETUP	Sets up and edit programmes.
	PICTURE	Adjusts the image size, quality, or effect.
	AUDIO	Adjusts the sound quality, effect, or volume level.
	TIME	Sets the time, date, or timer feature.
	OPTION	Customizes the general settings.

Customizing Settings

SETUP Settings

- Image shown may differ from your TV.

1 Press **SETTINGS** and the Navigation buttons to scroll to Setup.
2 Press the Navigation buttons to scroll to the setting or option you want and press **OK**.
3 When you return to the previous menu, press **SETTINGS**.

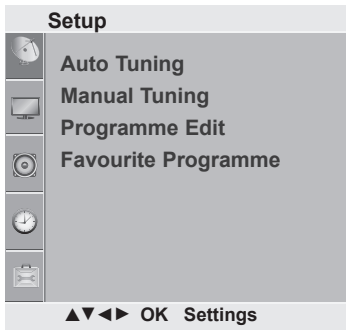

The available programme settings are described in the following:

Setting	Description
Auto Tuning	Tunes and stores all available programmes through antennas inputs (See p. 30).
Manual Tuning	Tunes and stores the programmes you want manually (See p. 31).
Programme Edit	Edits programmes (See p. 32).
Favourite Programme	Selects your favourite programmes directly(See p. 32).

PICTURE Settings

1 Press **SETTINGS** and the Navigation buttons to scroll to Picture.

2 Press the Navigation buttons to scroll to the setting or option you want and press OK.

3 When you return to the previous menu, press **SETTINGS**.

- Image shown may differ from your TV.

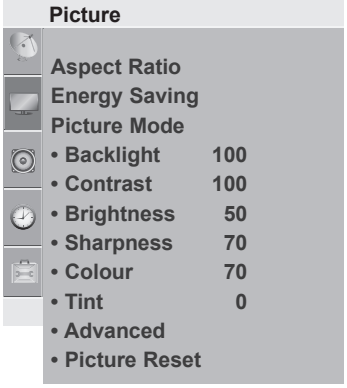

The available picture settings are described in the following.

Setting	Description	
Aspect Ratio	Changes the image size to view images at its optimal size (See p. 33).	
Energy Saving	Reduces the power consumption by adjusting the screen brightness.	
	Option	
	Off	The **Energy Saving** is off
	Minimum/ Medium/ Maximum	Selects the brightness level.
	Screen off	The screen turns off in 3 seconds.
	NOTE • When you select **Screen Off**, the screen will be turned off in 3 seconds and **Screen Off** will start. • If you adjust “Energy Saving- Minimum, Medium, Maximum”, Backlight feature will not work.	
Picture Mode	Selects one of the preset image or customizes options in each mode for the best TV screen performance. You are also able to customize advanced options of each mode.	
	Mode	
	Vivid	Adjusts the video image for the retail environment by enhancing the contrast, brightness, colour, and sharpness.
	Standard	Adjusts the image for the normal environment.
	Cinema	Optimizes the video images for a cinematic look to enjoy movies as if you are in a movie theatre.

Basic image options

Setting	Description
Backlight	Adjusts the brightness of the screen by controlling the LCD backlight. If you decrease the brightness level, the screen becomes darker and the power consumption will be reduced without any video signal loss.
Contrast	Increases or decreases the gradient of the video signal. You may use **Contrast** when the bright part of the picture is saturated.
Brightness	Adjusts the base level of the signal in the picture.
Sharpness	Adjusts the level of crispness in the edges between the light and dark areas of the picture. The lower the level, the softer the image.
Colour	Adjusts intensity of all colours.
Tint	Adjusts the balance between red and green levels.
Advanced	Customizes the advanced options.
Picture Reset	Restores the options of each mode to the factory default.

Advanced image options (Depending on model)

Setting	Description
Dynamic Contrast	Adjusts the contrast to keep it at the best level according to the brightness of the screen. The picture is improved by making bright parts brighter and dark parts darker.
Dynamic Colour	Adjusts screen colours so that they look livelier, richer and clearer. This feature enhances hue, saturation and luminance so that red, blue and green white look more vivid.
Noise Reduction	Reduces screen noise without compromising video quality.
Black Level	Sets black level of the screen to proper level. This function is available in the following modes: RF, AV or HDMI. » Low: The reflection of the screen gets darker. » High: The reflection of the screen gets brighter.
Film Mode	Makes video clips recorded in film look more natural. This feature operates only in RF or AV mode 480i/576i.
Colour Temperature	Choose one of three automatic colour adjustments. Set to warm to enhance hotter colours such as red, or set to cool to see less intense colours with more blue. You can control red, green, blue to adjust colour details.

AUDIO Settings

1 Press **SETTINGS** and the Navigation buttons to scroll to **Audio**.

2 Press the Navigation buttons to scroll to the setting or option you want and press **OK**.

3 When you return to the previous menu, press **SETTINGS**.

- Image shown may differ from your TV.

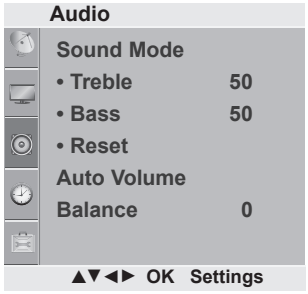

The available audio settings are described in the following.

Setting	Description	
Sound Mode	Selects one of the preset sound modes or customizes options in each mode.	
	Mode	
	Standard	Select when you want standard-quality sound.
	Music	Select when you listen to music.
	Cinema	Select when you watch movies.
	Option	
	Treble	Controls the dominant sounds in the output. When you turn up the treble, it will increase the output to the higher frequency range.
	Bass	Controls the softer sounds in the output. When you turn up the bass, it will increase the output to the lower frequency range.
	Reset	Resets the sound mode to the default setting.
Auto Volume	Activates the Auto Volume feature to keep the volume level consistent whenever you change channels. The volume level may not be consistent due to different signal conditions of broadcasting stations.	
Balance	Adjust balance between the left and right speakers according to your room environment.	

This feature may not be applied based on country broadcasting circumstance.

Stereo/Dual Reception

When a programme is selected, the sound information for the station appears with the programme number and station name.

1 Press **I/II** button to select the **Multi Audio** menu.

Broadcast	On Screen Display
Mono **Stereo** **Dual**	MONO STEREO DUAL I , DUAL II , DUAL I + II
NICAM	NICAM

- **Mono sound selection**
  If the stereo signal is weak in stereo reception, you can switch to mono. In mono reception, the clarity of sound is improved.

- **Language selection for dual language broadcast**
  If a programme can be received in two languages (dual language), you can switch to DUAL I, DUAL II or DUAL I+II.

DUAL I Sends the primary broadcast language to the loudspeakers.
DUAL I I Sends the secondary broadcast language to the loudspeakers.
DUAL I+I I Sends a separate language to each loudspeaker.

Nicam Reception

If the TV is equipped with a receiver for NICAM reception, high quality NICAM (Near Instantaneous Companding Audio Multiplex) digital sound can be received.
Sound output can be selected according to the type of broadcast received.

1 When **NICAM** mono is received, you can select **NICAM MONO** or **FM MONO**.
2 When **NICAM** stereo is received, you can select **NICAM STEREO** or **FM MONO**.
If the stereo signal is weak, switch to **FM MONO**.
3 When **NICAM** dual is received, you can select **NICAM DUAL I**, **NICAM DUAL II** or **NICAM DUAL I+II** or **FM MONO**.

Speaker Sound Output Selection

In AV, Component, HDMI mode, you can select output sound for the left and right loudspeakers.
Select the sound output.

L+R: Audio signal from audio L input is sent to the left loudspeaker and audio signal from audio R input is sent to the right loudspeaker.
L+L: Audio signal from audio L input is sent to left and right loudspeakers.
R+R: Audio signal from audio R input is sent to left and right loudspeakers.

TIME Settings

- Image shown may differ from your TV.

1 Press **SETTINGS** and the Navigation buttons to scroll to **Time**.
2 Press the Navigation buttons to scroll to the setting or option you want and press **OK**.
3 When you return to the previous menu, press **SETTINGS**.

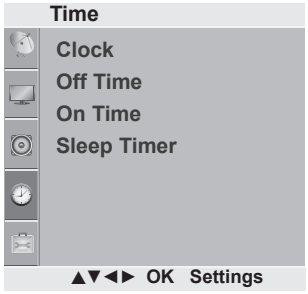

The available time settings are described in the following

Setting	Description
Clock	Sets the time.
Off Time/On Time	Sets the time to turn on or off the TV automatically. To use this function, you should set the current time and date in advance. **NOTE** • If you do not press any button within 2 hours after the TV turns on by the On Time feature, the TV enters the Standby mode automatically. • If you set both Off time and On time features to the same time, the Off time feature overrides the On time feature.
Sleep Timer	Sets the length of time until the TV to turns off. When you turn the TV off and turn it on again, the Sleep timer feature will be set to off.

OPTION Settings

- Image shown may differ from your TV.

1 Press **SETTINGS** and the Navigation buttons to scroll to Option.
2 Press the Navigation buttons to scroll to the setting or option you want and press **OK**.
3 When you return to the previous menu, press **SETTINGS.**

The available general settings are described in the following:

Setting	Description
Language	Selects a language for the display.
Key Lock	Activates or deactivates the lock system.
Factory Reset	Resets the TV to factory default and erases all stored programmes. Customizes the TV settings to suit your preference. The factory reset screen will appear when you turn on the TV for the first time.

ENGLISH

TELETEXT

- This feature is not available in all countries.

Teletext is a free service broadcast by most TV stations which gives up-to-theminute information on news, weather, television programmes, share prices and many other topics.

The teletext decoder of this TV can support the SIMPLE and FASTEXT systems. SIMPLE (standard teletext) consists of a number of pages which are selected by directly entering the corresponding page number. FASTEXT are more modern methods allowing quick and easy selection of teletext information.

Switch On/Off

Press the **TEXT** button to switch to teletext. The initial page or last page viewed appears on the screen.
Two page numbers, TV station name, date and time are displayed on the screen headline. The first page number indicates your selection, while the second shows the current page displayed.
Press the **TEXT** button to switch off teletext. The previous mode reappears.

Simple Text

Page selection

1 Enter the desired page number as a three digit number with the NUMBER buttons. If during selection you press a wrong number, you must complete the three digit number and then re-enter the correct page number.
2 The **P + -** button can be used to select the preceding or following page.

Programming a colour button in LIST mode

If the TV is in SIMPLE text or FASTEXT mode, press the button to switch to **LIST** mode.
Four teletext page numbers of your choice can be colour coded and easily selected by pressing the corresponding coloured button on the remote control handset.

1 Press a coloured button.
2 Using the Number buttons, select the page you wish to programme.
3 Press the **OK** button. The selected page is stored as the selected page number, blinking once to confirm this. From now on, you can select this page with the same coloured button.
4 The three other coloured buttons are programmed in this way.

Fastext

The teletext pages are colour coded along the bottom of the screen and are selected by pressing the corresponding coloured button.

Page selection

1 Press the button to select the index page.
2 You can select the pages which are colour coded along the bottom line with corresponding coloured buttons.
3 AS with SIMPLE teletext mode, you can select a page by entering its three digit page number with the Number buttons in FASTEXT mode.
4 The **P + -** button can be used to select the preceding or following page.

Special Teletext Function

Index

Select the each index page.

Time

When viewing a TV programme, select this menu to display the time at the top right hand corner of the screen.
In the teletext mode, press this button to select a sub page number. The sub page number is displayed at the bottom of the screen. To hold or change the sub page, press the Red/Green, ∧∨ or NUMBER buttons.

Hold

Stops the automatic page change which will occur if a teletext page consists of 2 or more sub pages.
The number of sub pages and the sub page displayed is, usually, shown on the screen below the time. When this menu is selected the stop symbol is displayed at the top left-hand corner of the screen and the automatic page change is inactive.

Reveal

Select this menu to display concealed information, such as solutions to riddles or puzzles.

Update

Displays the TV picture on the screen while waiting for a new teletext page. The display will appear at the top left hand corner of the screen. When the updated page is available then display will change to the page number. Select this menu again to view the updated teletext page.

ENGLISH

MAINTENANCE

Cleaning your TV

Clean your TV regularly to keep the best performance and to extend the product lifespan.

CAUTION

- Make sure to turn the power off and disconnect the power cord and all other cables first.
- When the TV is left unattended and unused for a long time, disconnect the power cord from the wall outlet to prevent possible damage from lightning or power surges.

Screen, frame, cabinet and stand

- To remove dust or light dirt, wipe the surface with a dry, clean, and soft cloth.
- To remove major dirt, wipe the surface with a soft cloth dampened in clean water or a diluted mild detergent. Then wipe immediately with a dry cloth.

CAUTION

- Avoid touching the screen at all times, as this may result in damage to the screen.
- Do not push, rub, or hit the screen surface with your fingernail or a sharp object, as this may result in scratches and image distortions.
- Do not use any chemicals as this may damage the product.
- Do not spray liquid onto the surface. If water enters the TV, it may result in fire, electric shock, or malfunction.

Power cord

- Remove the accumulated dust or dirt on the power cord regularly.

TROUBLESHOOTING

Problem	Solution
Cannot control the TV with the remote control.	• Check the remote control sensor on the product and try again. • Check if there is any obstacle between the product and the remote control. • Check if the batteries are still working and properly installed (⊕ to ⊕, ⊖ to ⊖).
No image display and no sound is produced.	• Check if the product is turned on. • Check if the power cord is connected to a wall outlet. • Check if there is a problem in the wall outlet by connecting other products.
The TV turns off suddenly.	• Check the power control settings. The power supply may be interrupted. • Check if the Auto sleep feature is activated in the Time settings. • If there is no signal while the TV is on, the TV will turn off automatically after 15 minutes of inactivity.

Audio

Problem	Solution
No sound is produced while images are displaying.	• Press ⊿ **+** or **-** button. • Check if the sound is muted by pressing **MUTE**. • Scroll to other channels. There may a problem with the broadcast. • Check if the audio cables are connected properly.
One of the speakers produce noises or does not produce sound.	• A change in ambient humidity or temperature may result in an unusual noise when the product turns on or off. • There is no problem with your product.

Video

Problem	Solution
An image displays in black and white or the colour quality is poor.	• Adjust the colour setting in the **PICTURE** menu. • Keep a sufficient distance between this product and other electronic products. • Scroll to other channels. There may a problem with the broadcast.
Horizontal or vertical bars appears or images blur	• Check if there are local interferences such as an electrical appliance or power tool.
Lines or streaks appear on images	• Check the antenna or aim the antenna to the proper direction.
Afterimages (ghosts) appear when the product turns off	• Pixels may have been damaged from a fixed image displayed for a long time (image burn). Use a screen saver to prevent the pixel damage on the screen.
The power is on but the screen appears extremely dark.	• Adjust the brightness and contrast in the **PICTURE** menu.
“No Signal” appears on the screen.	• Check if the signal cable is connected between the TV and products properly. • Check the selected input source by pressing **INPUT**.
The display offset is wrong.	• Adjust the position setting in the **PICTURE** menu. • Check if the video card resolution and frequency are supported by the product. If the frequency is out of range, set to the recommended resolution using the display settings on the external device.
Thin lines appear in the background of the screen.	• Check the video cable connections.
Horizontal noises appear or characters blur.	• Adjust the Phase setting in the **PICTURE** menu.
The reception on some channels is poor	• Scroll to other channels. There may a problem with the broadcast. • The station signal may be weak. Aim the antenna to the proper direction. • Check if there is local interference such as an electrical appliance or power tool.

ENGLISH

SPECIFICATIONS

Product specifications may be changed without prior notice due to upgrade of product functions.
For the power supply and power consumption, refer to the label attached to the product.

MODELS		19LS33**	22LS33**	26LS33**
		19LS3300-TA 19LS330Y-TA	22LS3300-TA 22LS330Y-TA	26LS3300-TA 26LS330Y-TA
Dimensions (W x H x D)	With stand (mm)	451.0 x 334.0 x 140.0	523.0 x 376.0 x 140.0	627.0 x 442.0 x 162.0
	Without stand(mm)	451.0 x 296.0 x 31.5	523.0 x 339.0 x 31.6	627.0 x 402.0 x 30.1
Weight	With stand (kg)	2.8	3.5	5.0
	Without stand (kg)	2.6	3.2	4.7
Power requirement		DC 19V, 1.1A	DC 24V, 1.4A	DC 24V, 1.8A
MODELS		32LS33**	22CS41**	26CS41**
		32LS3300-TA 32LS330Y-TA	22CS410-TB 22CS410Y-TB 22CS411-TA 22CS411Y-TA 22CS412-TD	26CS410-TB 26CS410Y-TB 26CS411-TA 26CS411Y-TA 26CS412-TD
Dimensions (W x H x D)	With stand (mm)	755.0 x 530.0 x 239.0	539.0 x 400.0 x 165.0	663.0 x 483.0 x 197.0
	Without stand(mm)	755.0 x 479.0 x 45.8	539.0 x 345.0 x 56.8	663.0 x 424.0 x 72.8
Weight	With stand (kg)	9.1	4.2	7.4
	Without stand (kg)	8.3	3.9	6.6
Power requirement		AC 100-240 V~ 50 / 60 Hz	AC 100-240 V~ 50 / 60 Hz	AC 100-240 V~ 50 / 60 Hz
MODELS		32CS41**	42CS41**	32LS310*
		32CS410-TB 32CS410Y-TB 32CS411-TA 32CS411Y-TA 32CS412-TD	42CS410-TB 42CS410Y-TB 42CS411-TA 42CS411Y-TA 42CS412-TD	32LS3100-TA 32LS310Y-TA
Dimensions (W x H x D)	With stand (mm)	794.0 x 565.0 x 207.0	1017.0 x 695.0 x 261.0	795.0 x 566.0 x 207.0
	Without stand(mm)	794.0 x 504.0 x 73.5	1017.0 x 629.0 x 76.5	795.0 x 504.0 x 73.5
Weight	With stand (kg)	9.0	15.1	9.1
	Without stand (kg)	8.0	13.5	8.1
Power requirement		AC 100-240 V~ 50 / 60 Hz	AC 100-240 V~ 50 / 60 Hz	AC 100-240 V~ 50 / 60 Hz
MODELS		42LS310*	32LS311*	42LS311*
		42LS3100-TA 42LS310Y-TA	32LS3110-TB 32LS311Y-TB	42LS3110-TB 42LS311Y-TB
Dimensions (W x H x D)	With stand (mm)	1018.0 x 696.0 x 261.0	795.0 x 566.0 x 207.0	1018.0 x 696.0 x 261.0
	Without stand(mm)	1018.0 x 629.0 x 76.5	795.0 x 504.0 x 73.5	1018.0 x 629.0 x 76.5
Weight	With stand (kg)	14.7	9.1	14.7
	Without stand (kg)	13.1	8.1	13.1
Power requirement		AC 100-240 V~ 50 / 60 Hz	AC 100-240 V~ 50 / 60 Hz	AC 100-240 V~ 50 / 60 Hz

MODELS		32LS315*	42LS315*	32LS30**
		32LS3150-TA 32LS315Y-TA	42LS3150-TA 42LS315Y-TA	32LS3000-TA
Dimensions (W x H x D)	With stand (mm)	738.0 x 501.0 x 185.0	972.0 x 635.0 x 212.0	846.0 x 519.0 x 227.5
	Without stand(mm)	738.0 x 438.0 x 86.0	972.0 x 571.0 x 86.0	846.0 x 459.0 x 77.9
Weight	With stand (kg)	7.5	11.8	8.5
	Without stand (kg)	6.9	10.7	7.3
Power requirement		AC 100-240 V~ 50 / 60 Hz	AC 100-240 V~ 50 / 60 Hz	AC 100-240 V~ 50 / 60 Hz

Environment condition	Operating Temperature	0 °C to 40 °C
	Operating Humidity	Less than 80 %
	Storage Temperature	-20 °C to 60 °C
	Storage Humidity	Less than 85 %

		Analogue TV
New Zealand, Singapore	Television System	PAL/SECAM-B/G/D/K, PAL-I
	Programme Coverage	BG : VHF/UHF 1 to 69, CATV 01 to 47 I : VHF/UHF 1 to 69, CATV 01 to 47 DK : VHF/UHF 1 to 69, CATV 01 to 47
Australia	Television System	PAL B/B
	Programme Coverage	B/B : VHF/UHF 0 to 75, CATV : 2 to 44
Indonesia, Israel, Myanmar, Sri Lanka	Television System	PAL/SECAM-B/G/D/K, PAL-I, NTSC-M
	Programme Coverage	BG : VHF/UHF 1 to 69, CATV 01 to 47 I : VHF/UHF 1 to 69, CATV 01 to 47 DK : VHF/UHF 1 to 69, CATV 01 to 47 M : VHF/UHF 2 to 78, CATV 01 to 71
South Africa	Television System	PAL/SECAM-B/G/D/K, PAL-I, NTSC-M
	Programme Coverage	BG : VHF/UHF 1 to 69, CATV 01 to 47 I : VHF/UHF 1 to 69, CATV 01 to 47 DK : VHF/UHF 1 to 69, CATV 01 to 47 M : VHF/UHF 2 to 78, CATV 01 to 71
Vietnam, Malaysia	Television System	PAL/SECAM-B/G/D/K, PAL-I, NTSC-M
	Programme Coverage	BG : VHF/UHF 1 to 69, CATV 01 to 47 I : VHF/UHF 1 to 69, CATV 01 to 47 DK : VHF/UHF 1 to 69, CATV 01 to 47 M : VHF/UHF 2 to 78, CATV 01 to 71
Iran, Algeria, Tunisia, Digital model	Television System	PAL/SECAM-B/G/D/K, PAL-I, NTSC-M
	Programme Coverage	BG : VHF/UHF 1 to 69, CATV 01 to 47 I : VHF/UHF 1 to 69, CATV 01 to 47 DK : VHF/UHF 1 to 69, CATV 01 to 47 M : VHF/UHF 2 to 78, CATV 01 to 71
Analogue model, India, Thailand, --	Television System	PAL/SECAM-B/G/D/K, PAL-I, NTSC-M
	Programme Coverage	BG : VHF/UHF 1 to 69, CATV 01 to 47 I : VHF/UHF 1 to 69, CATV 01 to 47 DK : VHF/UHF 1 to 69, CATV 01 to 47 M : VHF/UHF 2 to 78, CATV 01 to 71
	External Antenna Impedance	75 Ω

HDMI-DTV supported mode

Resolution	Horizontal Frequency (kHz)	Vertical Frequency (Hz)
720x480	31.469 31.5	59.94 60
720x576	31.25	50
1280x720	37.5 44.96 45	50 59.94 60
1920x1080	33.72 33.75 28.125 26.97 27 33.716 33.75 56.25 67.43 67.5	59.94 60 50 23.97 24 29.976 30.00 50 59.94 60

Component port connecting information

Component ports on the TV	Y	P_B	P_R

Video output ports on DVD player	Y	P_B	P_R
	Y	B-Y	R-Y
	Y	Cb	Cr
	Y	Pb	Pr

Signal	Component
480i/576i	O
480p/576p	O
720p/1080i	O
1080p	O (50 Hz / 60 Hz only)

Record the model number and serial number of the TV.
Refer to the label on the back cover and quote this information to your dealer when requiring any service.

MODEL _____

SERIAL _____

(Only DTV)

Digital Video Broadcasting