LG
Life's Good

OWNER'S MANUAL

DVD MINI Hi-Fi System

Please read this manual carefully before operating your set and retain it for future reference.

DM5620 (DM5620, DMS5620V, DMS5620W)

MFL67565028

Safety Information

CAUTION: TO REDUCE THE RISK OF ELECTRIC SHOCK DO NOT REMOVE COVER (OR BACK) NO USER-SERVICEABLE PARTS INSIDE REFER SERVICING TO QUALIFIED SERVICE PERSONNEL.

This lightning flash with arrowhead symbol within an equilateral triangle is intended to alert the user to the presence of uninsulated dangerous voltage within the product's enclosure that may be of sufficient magnitude to constitute a risk of electric shock to persons.

The exclamation point within an equilateral triangle is intended to alert the user to the presence of important operating and maintenance (servicing) instructions in the literature accompanying the product.

WARNING: TO PREVENT FIRE OR ELECTRIC SHOCK HAZARD, DO NOT EXPOSE THIS PRODUCT TO RAIN OR MOISTURE.

WARNING: Do not install this equipment in a confined space such as a book case or similar unit.

CAUTION: Do not block any ventilation openings. Install in accordance with the manufacturer's instructions.
Slots and openings in the cabinet are provided for ventilation and to ensure reliable operation of the product and to protect it from over heating. The openings shall be never be blocked by placing the product on a bed, sofa, rug or other similar surface. This product shall not be placed in a built-in installation such as a bookcase or rack unless proper ventilation is provided or the manufacturer's instruction has been adhered to.

CAUTION: This product employs a Laser System. To ensure proper use of this product, please read this owner's manual carefully and retain it for future reference. Shall the unit require maintenance, contact an authorized service center.
Use of controls, adjustments or the performance of procedures other than those specified herein may result in hazardous radiation exposure.
To prevent direct exposure to laser beam, do not try to open the enclosure.

CAUTION concerning the Power Cord

Most appliances recommend they be placed upon a dedicated circuit;

That is, a single outlet circuit which powers only that appliance and has no additional outlets or branch circuits. Check the specification page of this owner's manual to be certain. Do not overload wall outlets. Overloaded wall outlets, loose or damaged wall outlets, extension cords, frayed power cords, or damaged or cracked wire insulation are dangerous. Any of these conditions could result in electric shock or fire. Periodically examine the cord of your appliance, and if its appearance indicates damage or deterioration, unplug it, discontinue use of the appliance, and have the cord replaced with an exact replacement part by an authorized service center. Protect the power cord from physical or mechanical abuse, such as being twisted, kinked, pinched, closed in a door, or walked upon. Pay particular attention to plugs, wall outlets, and the point where the cord exits the appliance. To disconnect power from the mains, pull out the mains cord plug. When installing the product, ensure that the plug is easily accessible.

This device is equipped with a portable battery or accumulator.

Safety way to remove the battery or the battery from the equipment: Remove the old battery or battery pack, follow the steps in reverse order than the assembly. To prevent contamination of the environment and bring on possible threat to human and animal health, the old battery or the battery put it in the appropriate container at designated collection points. Do not dispose of batteries or battery together with other waste. It is recommended that you use local, free reimbursement systems batteries and accumulators. The battery shall not be exposed to excessive heat such as sunshine, fire or the like.

CAUTION: The apparatus shall not be exposed to water (dripping or splashing) and no objects filled with liquids, such as vases, shall be placed on the apparatus.

Copyrights

It is forbidden by law to copy, broadcast, show, broadcast via cable, play in public, or rent copyrighted material without permission. This product features the copy protection function developed by Macrovision. Copy protection signals are recorded on some discs. When recording and playing the pictures of these discs picture noise will appear. This product incorporates copyright protection technology that is protected by U.S. patents and other intellectual property rights. Use of this copyright protection technology must be authorized by Macrovision, and is intended for home and other limited viewing uses only unless otherwise authorized by Macrovision. Reverse engineering or disassembly is prohibited.

CONSUMERS SHOULD NOTE THAT NOT ALL HIGH DEFINITION TELEVISION SETS ARE FULLY COMPATIBLE WITH THIS PRODUCT AND MAY CAUSE ARTIFACTS TO BE DISPLAYED IN THE PICTURE. IN CASE OF 525 OR 625 PROGRESSIVE SCAN PICTURE PROBLEMS, IT IS RECOMMENDED THAT THE USER SWITCH THE CONNECTION TO THE 'STANDARD DEFINITION' OUTPUT. IF THERE ARE QUESTIONS REGARDING OUR TV SET COMPATIBILITY WITH THIS MODEL 525p AND 625p UNIT, PLEASE CONTACT OUR CUSTOMER SERVICE CENTER.

You have to set the disc format option to [Mastered] in order to make the discs compatible with the LG players when formatting rewritable discs. When setting the option to Live File System, you cannot use it on LG players.

(Mastered/ Live File System : Disc format system for Windows Vista)

Table of Contents

1 Getting Started

3 Safety Information
7 Unique Features
7 – USB Direct Recording
7 – AUTO DJ
7 Accessories
7 Introduction
7 – Playable Discs
7 – About the ⊘ Symbol Display
8 – Symbol Used in this Manual
8 – Regional Codes
8 Playable file Requirement
8 – MP3/WMA music file requirement
8 – Compatible USB Devices
9 – USB device requirement
9 – Photo file requirement
9 – DivX file requirement
10 Remote control
11 Top panel
12 Front panel
14 Rear panel

2 Connecting

15 Connecting to speakers
15 – Attaching the speakers to the unit
15 Antenna Connection
16 Connections to Your TV
16 – Video Connection
17 – Component Video Connection
17 Optional Equipment Connection
17 – AUX In Connection
18 – USB Connection
18 Adjust the Setup settings
18 – OSD Initial language settings - Optional
19 – To display and exit the Setup Menu
19 – LANGUAGE
20 – DISPLAY
20 – AUDIO
21 – LOCK (Parental Control)
22 – Area Code
22 – OTHERS

3 Operating

23 Basic Operations
23 – Disc/USB Operations
24 – Tape Operations
24 Other Operations
24 – Displaying Disc Information on-screen
25 – To display the DVD Menu
25 – To display the DVD title
25 – Selecting a subtitle language
25 – 1.5 times speed playback
25 – Starting play from selected time
25 – Last Scene Memory
25 – Changing the character set to display DivX® subtitle correctly - optional
26 – Programmed Playback
26 – Viewing a PHOTO file
26 – Viewing a PHOTO file as a slide show
26 – Setting the Clock
27 – Using your player as an alarm clock
27 – Sleep Timer Setting
27 – Dimmer
28 – DEMO
28 – Turning off the sound temporarily
28 – Screen Saver
28 – System Select - Optional
28 – Displaying file information (ID3 TAG)
28 – AUTO DJ playback
29 – Using Microphone
29 Radio Operations
29 – Listening to the radio
30 – Presetting the Radio Stations
30 – Deleting all the saved stations
30 – Improving poor FM reception
30 Sound adjustment
30 – Setting the surround mode
31 – Setting the USER EQ
31 Advanced Operations
31 – Listening to music from your external device
31 – Recording on USB
32 – Recording on tape

4 Troubleshooting

33 Troubleshooting
34 Area Codes
35 Language Codes

5 Appendix

36 Specifications
38 Maintenance
38 – Handling the Unit
38 – Notes on Discs
38 Trademarks and Licenses

Unique Features

USB Direct Recording

Records music to your USB device.

AUTO DJ

Blends the end of one song into the beginning of another for seamless playback.

Accessories

Please check and identify the supplied accessories.

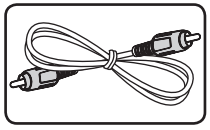

Video cable (1)

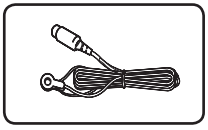

FM antenna (1)

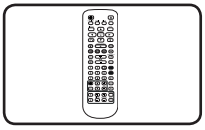

Remote control (1)

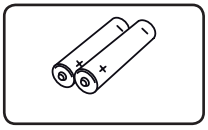

Batteries (2)

Introduction

Playable Discs

This unit plays DVD±R/RW and CD-R/RW that contains audio titles, DivX, MP3, WMA and/or JPEG files. Some DVD±RW/DVD±R or CD-RW/CD-R cannot be played on this unit due to the recording quality or physical condition of the disc, or the characteristics of the recording device and authoring software.

DVD VIDEO	DVD-VIDEO (8 cm / 12 cm disc) Discs such as movies that can be purchased or rented.
DVD R	DVD±R (8 cm / 12 cm disc) Video mode and finalized only
DVD RW	DVD-RW (8 cm / 12 cm disc) Video mode and finalized only
RW DVD+R	DVD+R: Video mode only Supports the double layer disc also
RW DVD+ReWritable	DVD+RW (8 cm / 12 cm disc) Video mode and finalized only
COMPACT disc DIGITAL AUDIO	Audio CD: Music CDs or CD-R/CD-RW in music CD format that can be purchased.

About the ⊘ Symbol Display

"⊘" may appear on your TV display during operation and indicates that the function explained in this owner's manual is not available on that disc.

Symbol Used in this Manual

DVD and finalized DVD±R/RW	DVD
DivX files	MOVIE
MP3/WMA files, Audio CDs	MUSIC
JPG files	PHOTO

Regional Codes

This unit has a regional code printed on the rear of the unit. This unit can play only DVD discs labelled same as the rear of the unit or "ALL".

- Most DVD discs have a globe with one or more numbers in it clearly visible on the cover. This number must match your unit's regional code or the disc cannot play.
- If you try to play a DVD with a different regional code from your unit, the message "Check Regional Code" appears on the TV screen.

Note

Indicates special notes and operating features.

Tip

Indicates tip and hints for making the task easier.

Caution

Indicates cautions for preventing possible damages from abuse.

Playable file Requirement

MP3/WMA music file requirement

MP3/ WMA file compatibility with this unit is limited as follows :

- Sampling Frequency : 32 - 48 kHz (MP3), 32 - 48 kHz (WMA)
- Bit rate : 32 - 320 kbps (MP3), 40 - 192 kbps (WMA)
- Maximum files : Under 999
- File extensions : ".mp3"/ ".wma"
- CD-ROM file format : ISO9660/ JOLIET
- We recommend that you use "Easy-CD Creator", which creates an ISO 9660 file system.

Compatible USB Devices

- MP3 Player : Flash type MP3 player.
- USB Flash Drive : Devices that support USB2.0 or USB1.1.
- The USB function of this unit does not support all USB devices.

USB device requirement

- Devices which require additional program installation when you have connected it to a computer, are not supported.
- Do not extract the USB device while in operation.
- For a large capacity USB, it may take longer than a few minute to be searched.
- To prevent data loss, back up all data.
- If you use a USB extension cable or USB hub, the USB device is not recognized.
- Using NTFS file system is not supported. (Only FAT(16/ 32) file system is supported.)
- This unit is not supported when the total number of files is 1 000 or more.
- External HDD, Card readers, Locked devices, or hard type USB devices are not supported.
- USB port of the unit cannot be connected to PC. The unit cannot be used as a storage device.

Photo file requirement

Photo file compatibility with this unit is limited as follows :

- Max pixel in width :
  Normal : 5120 x 3840
  Progressive JPEG : 2048 x 1536
- Maximum files : Under 999
- Some discs may not operate due to a different recording format or the condition of disc.
- File extensions : ".jpg"
- CD-ROM file format : ISO9660 LEVEL 1/ JOLIET

DivX file requirement

DivX file compatibility with this unit is limited as follows :

- Available resolution:
  up to 800 x 600 (W x H) pixels.
- The file name of the DivX subtitle should be entered 45 characters or less.
- If there is a code impossible to express in the DivX file, it may be displayed as a " _ " mark on the display.
- Frame rate : less than 30 fps.
- If the video and audio structure of recorded files are not interleaved, either video or audio is output.
- Playable DivX file : ".avi", ".mpg", ".mpeg", ".divx"
- Playable Subtitle format : SubRip (*.srt/ *.txt), SAMI (*.smi), SubStation Alpha (*.ssa/ *.txt), MicroDVD (*.sub/ *.txt), SubViewer 2.0 (*.sub/ *.txt), Vobsub (*.sub)
- Playable Codec format : "DIVX3.xx", "DIVX4.xx", "DIVX5.xx", "MP4V3", "3IVX".
- Playable Audio format : "AC3", "PCM", "MP3", "WMA".
- Sampling frequency : between 32 to 48 kHz (MP3), between 32 to 48 kHz (WMA)
- Bit rate : between 32 to 320 kbps (MP3), 40 to 192 kbps (WMA)
- For Discs formatted in Live file system, you can not use it on this unit.
- If the name of movie file is different from that of the subtitle file, during playback of a DivX file, subtitle may not be display.
- If you play a DivX file differ from DivX spec, it may not operate normally.

Remote control

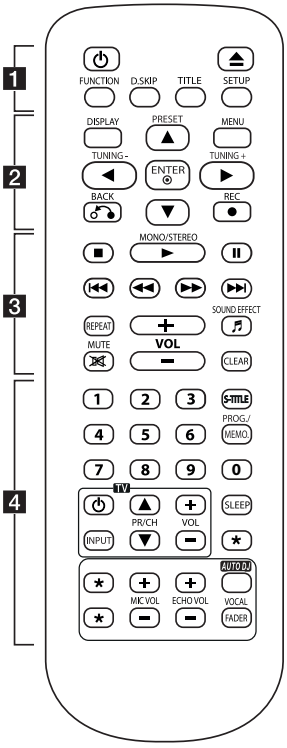

Battery Installation

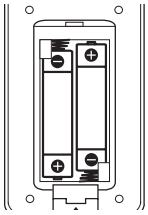

Remove the battery cover on the rear of the remote control, and insert two (size AAA) batteries with ⊕ and ⊖ matched correctly.

• • • • • • **1** • • • • •

⏻(POWER) : Switches the unit ON or OFF.

⏏(OPEN/CLOSE) : Opens and closes the disc tray.

FUNCTION : Selects the function and input source.

D.SKIP : Chooses a desired disc.

TITLE : If the current DVD title has a menu, the title menu appears on the screen. Otherwise, the disc menu may not appear.

SETUP : Accesses or removes setup menu.

• • • • • • **2** • • • • •

DISPLAY : Accesses On-Screen Display.

MENU : Accesses the menu on a DVD disc.

PRESET(▲/▼) : Selects programme of Radio.

TUNING(-/+) : Tunes in the desired radio station.

▲/▼/◄/► : (up/down/left/right) : Uses to navigate on-screen displays.

ENTER⦿ : Acknowledges menu selection.

BACK↶ : Moves backwards in the menu.

REC● : Starts recording.

• • • • • • **3** • • • • •

■(STOP) : Stops playback or recording.

MONO/STEREO► :
- Starts playback.
-Selects Mono/Stereo.

II(PAUSE) :
- Pauses playback.
- Plays title Frame-by-Frame. (DVD,DivX only)

I◄◄ / ►►I(SKIP) : Goes to next or previous chapter/track/file.

◄◄ / ►►(SCAN) : Searches backward or forward.

REPEAT : Selects a play mode.

VOL(+/-) (Volume) : Adjusts volume level.

SOUND EFFECT♫ : Selects a sound effect mode.

MUTE🔇 : Mutes the sound.

CLEAR :
- Removes a number when setting the password.
- Removes a track number on the Program List.
- Removes language code when setting the disc language.

• • • • • • **4** • • • • •

0 to 9 numerical buttons : Selects numbered options in a menu.

S-TITLE : During playback, press **S-TITLE** repeatedly to select a desired subtitle language.

PROG./MEMO. :
-Stores radio stations.
-Creates a playlist you want to listen to.

TV Control buttons : Controls the TV. (LG TV only)

Controlling the TV.
You can control the sound level, input source, and power switching of LG TVs as well. Hold ⏻**(POWER)**(TV) and press **PR/CH(▲/▼)** button repeatedly until the TV turns on or off.

SLEEP : Sets the system to turn off automatically at a specified time.

★: This button is not available.

MIC VOL(+/-) : Adjusts microphone volume.

ECHO VOL (+/ -) : Adjusts echo volume.

AUTO DJ : Selects the AUTO DJ mode.

VOCAL FADER : enjoys the function as karaoke, by reducing singer vocal of music in the various sources.

Top panel

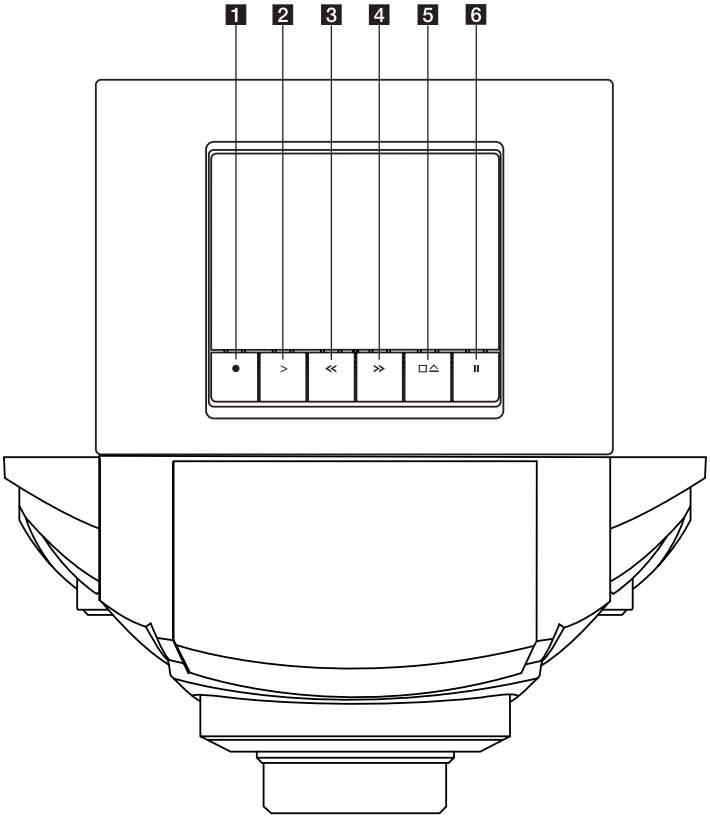

1 ●(RECORD)
Starts recording.

2 >(PLAY)
Starts playback.

3 ≪ (REW)
Searches backward.

4 ≫ (FF)
Searches forward.

5 □ ⏏ (STOP/OPEN)
During playback, Stops play.
In stop state, opens or closes the cassette tape door.

6 ❚❚(PAUSE)
Pauses playback.

Front panel

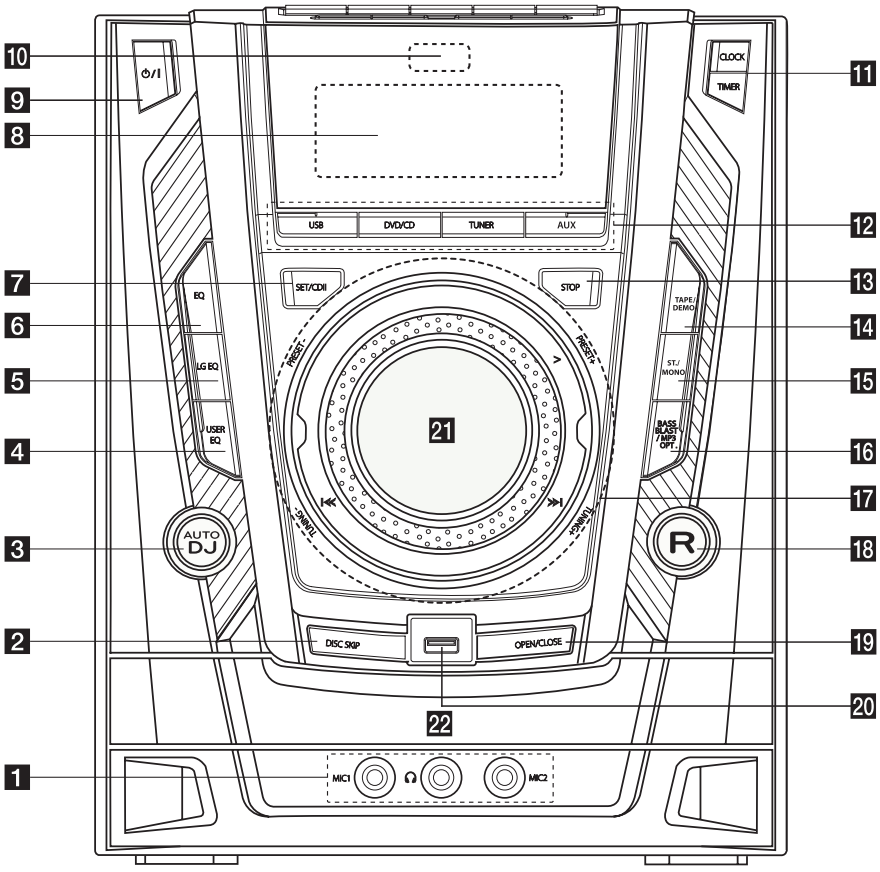
10
9
8
7
6
5
4
3
2
1
11
12
13
14
15
16
17
18
19
20
21
22
⏻/I
CLOCK
TIMER
USB
DVD/CD
TUNER
AUX
SET/CDII
STOP
EQ
LG EQ
USER EQ
TAPE/ DEMO
ST./ MONO
BASS BLAST+ / MP3 OPT.
PRESET-
PRESET+
TUNING-
TUNING+
AUTO DJ
R
DISC SKIP
OPEN/CLOSE
MIC1
MIC2

1 **MIC 1,2**
Connects a microphone to this jack.

Headphone jack
A warning that excessive sound pressure from earphones and headphones can cause hearing loss.

2 **DISC SKIP**
Chooses a desired Disc.

3 **AUTO DJ**
Selects the AUTO DJ mode.

4 **USER EQ**
Controls sound register.

5 **LG EQ**
Selects a Natural or Local Specialization equalizer effect by LG EQ.

6 **EQ**
Chooses sound impressions.

7 **SET/CD II**
Pauses or confirms the setting.
Pauses playback.

8 Display window

9 ⏻/I (POWER)

10 Remote sensor

11 **CLOCK**
Sets the clock and checks the time.

TIMER
Uses your player as an alarm clock.

12 **USB**
Selects the USB function.

DVD/CD -
Selects the DVD/CD function.

TUNER
Selects the TUNER function.

AUX
Selects the AUX function.

13 **STOP**
Stops playback or recording.

14 **TAPE/DEMO**
Demonstrates each of functions.
Selects the TAPE function.

15 **ST./MONO**
Selects Stereo/Mono.

16 **BASS BLAST/MP3 OPT.**
Reinforces the treble, bass and surround effect.
Optimizes compressible MP3 file to improve the treble sound.

17 >(PLAY)
Starts playback.

PRESET(-/+)
Selects preset numbers.
TUNING(-/+)
Selects the radio station

I<</>>I
- Searches backward or forward.
- Skips to the previous/next chapter/track/file.

18 **R** (RECORD)
Starts recording.

19 **OPEN/CLOSE**
Opens and closes the disc tray.

20 USB port
Plays or records the audio files by connecting the USB device.

21 Volume knob
Adjusts volume of speaker or headphone.

22 Disc tray
Roads a disc(discs).

Rear panel

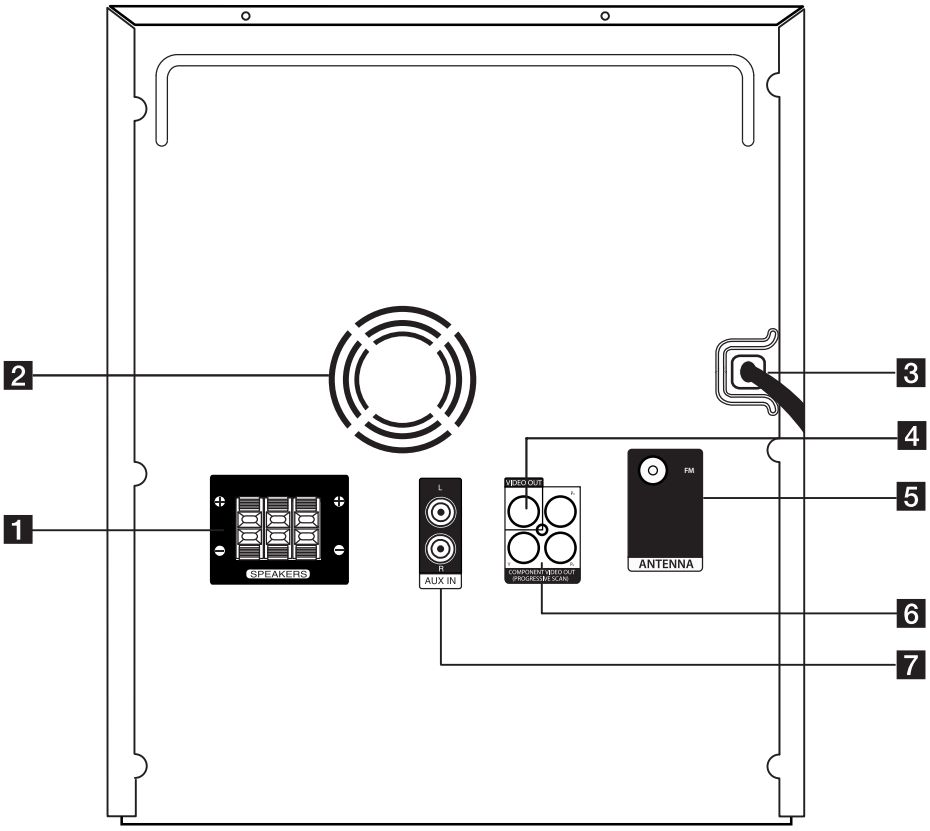

1 **SPEAKERS** terminal
2 Cooling fan
3 Power cord
4 **VIDEO OUT** connector
5 **ANTENNA (FM)**
6 **COMPONENT VIDEO OUT (PROGRESSIVE SCAN)** connectors
7 **AUX IN** connectors (L/R)

Connecting to speakers

Attaching the speakers to the unit

To connect the cable to the unit, press each plastic finger pad to open the connection terminals on the unit. Insert the wire and release the finger pad.

Connect the black stripe of each wire to the terminals marked - (minus) and the other end to the terminals marked + (plus).

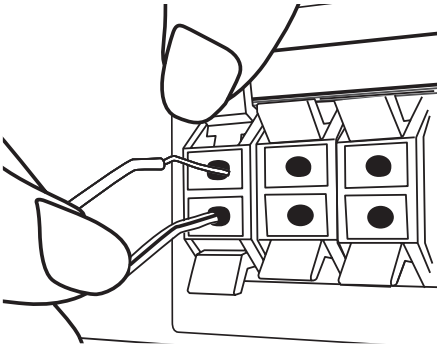

Caution

- Be careful to make sure children do not put their hands or any objects into the *speaker duct.
  *Speaker duct: A hall for plentiful bass sound on speaker cabinet (enclosure)
- The speakers contain magnet parts, so color irregularity may occur on the TV screen or PC monitor screen. Please use the speakers far away from either TV screen or PC monitor.

Color	Speaker	Position
Orange	Sub woofer	Any front position
Red	Front	Front right
White	Front	Front left

Antenna Connection

Connect the supplied FM antenna for listening to the radio.

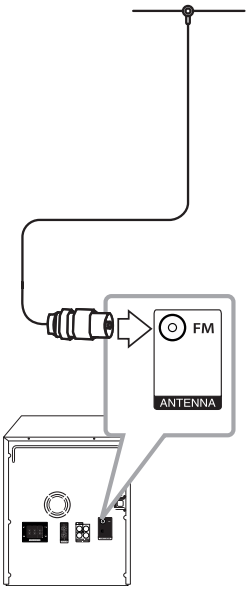

Note

Be sure to fully extend the FM wire antenna. After connecting the FM wire antenna, keep it as horizontal as possible.

Connections to Your TV

Make one of the following connections, depending on the capabilities of your existing equipment.

Note

- Depending on your TV and other equipment you wish to connect, there are various ways you could connect the unit. Use only one of the connections described in this manual.
- Please refer to the manuals of your TV, Stereo System or other devices as necessary to make the best connections.
- Make sure the unit is connected directly to the TV. Tune the TV to the correct video input channel.
- Do not connect your unit via your VCR. The image could be distorted by the copy protection system.

Video Connection

Connect the VIDEO OUT jack on the unit to the video in jack on the TV by using a video cable.

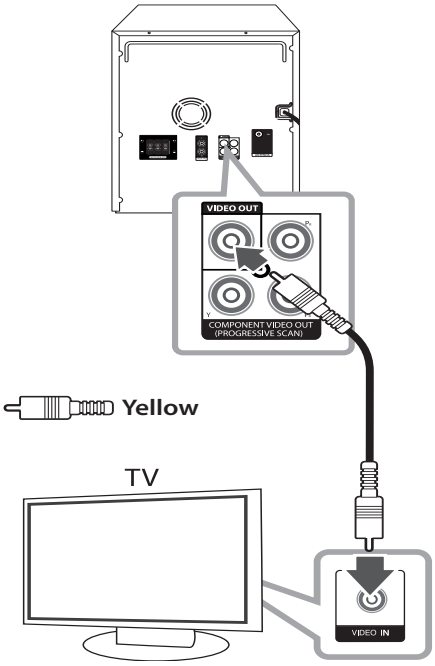

Component Video Connection

Connect the COMPONENT VIDEO OUT (PROGRESSIVE SCAN) jacks on the unit to the corresponding input jacks on the TV by using component cables.
You can hear the sound through the system's speakers.

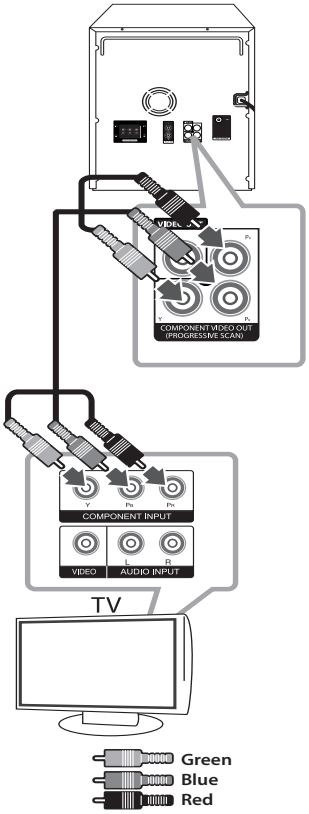

Note

If your TV accepts progressive format signals, you must use this connection and set [Progressive Scan] in [Display] setup to [On] (See page 20).

Optional Equipment Connection

AUX In Connection

Connect an Output of auxiliary device to the AUX (L/R) IN Connector.

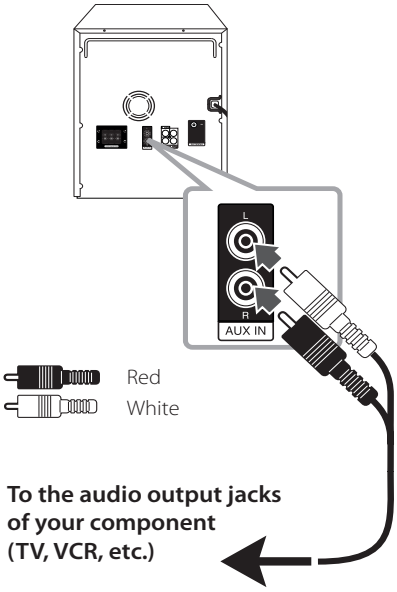

Note

If your TV has only one output for audio (mono), connect it to the left (white) audio jack on the unit.

USB Connection

Connect the USB port of USB Memory (or MP3 player, etc.) to the USB port on the front of the unit.

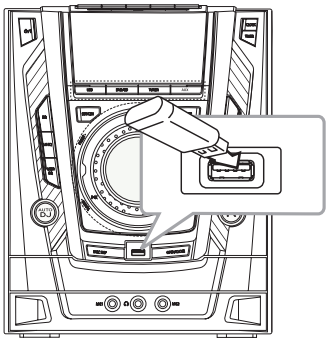

Note

Removing the USB Device from the unit.

1. Choose a different function/mode or press ■(STOP) on the remote control or **STOP** on the unit twice in a row.
2. Remove the USB device from the unit.

Adjust the Setup settings

By using the Setup menu, you can make various adjustments to items such as picture and sound. You can also set a language for the subtitles and the Setup menu among other things. For details on each Setup menu item, refer to the contents as following.

OSD Initial language settings - Optional

When using this unit for the first time, the initial language Setup menu appears on your TV screen. You must complete initial language selection before using the unit. English will be selected as the initial language.

1. Press ⏻(POWER) on the remote control or ⏻/❙(POWER) on the unit to turn the unit on. The language setup menu will appear on the screen.
2. Use ▲/▼/◄/► on the remote control to select a language then press **ENTER**⦿. The confirm menu will appear.
3. Use ◄/► to select [Enter] then press **ENTER** ⦿ to finish the language setup.

To display and exit the Setup Menu

1. Select the DVD/CD or USB function by pressing **FUNCTION** on the remote control or by pressing **DVD/CD** or **USB** on the unit.
2. Press **SETUP** on the remote control. Displays the [SETUP] Menu.
3. Press **SETUP** or **BACK** to exit in the [SETUP] Menu.

About help menu for Setup

Menu	Buttons	Operation
▲/▼ Move	▲/▼	Moving to another menu.
◄ Prev.	◄	Moving to previous level.
► Select	►	Moving to next level or selecting menu.
Close	BACK	To exit the [Setup] menu.
Enter	ENTER	To confirm menu.

LANGUAGE

OSD

Select a language for the Setup menu and then on screen display.

Disc Audio/Disc Subtitle/Disc Menu

Select the language you prefer for the audio track (disc audio), subtitles, and the disc menu.

[Original]

Refer to the original language in which the disc was recorded.

[Other]

To select another language, press numeric buttons and then **ENTER** on the romote control to enter the corresponding 4-digit number according to the language code list on the page 35. If you enter the wrong language code, press **CLEAR**.

[Off (for Disc Subtitle)]

Turn off Subtitle.

DISPLAY

TV Aspect

Select which screen aspect to use is based on the shape of your TV screen.

[4:3]

Select when a standard 4:3 TV is connected.

[16:9]

Select when a 16:9 wide TV is connected.

Display Mode

The Display Mode setting works only when the TV Aspect mode is set to 4:3.

[Letterbox]

This displays a wide screen picture with black bands at the top and bottom of the screen.

[Panscan]

This fills the entire 4:3 screen, cropping the picture as necessary.

Progressive Scan (For Component Video connections)

Selects whether the COMPONENT VIDEO(PROGRESSIVE SCAN) OUT jacks output progressive signal. If your TV accepts progressive format signals, you will enjoy accurate color reproduction and high quality image by selecting [On]. If your TV does not accept progressive format signals, select [Off].

If you set Progressive Scan to [On] in error, you must reset the unit. First, remove the disc from the unit. Next, press and hold ■(STOP) for about five seconds. The video output will be restored to the standard setting, and a picture will be visible on your TV.

AUDIO

2.1 Speaker Setup

Make the following settings for the built-in 2.1 channel surrounds decoder.

1. Press **SETUP** on the remote control.
2. Use ▲/▼ to select AUDIO menu and then press►.
3. Use ▲/▼ to select [2.1 Speaker setup] menu.
4. Press **ENTER**⦿
   The [2.1 Speaker setup] appears.

5. Use ◄/► to select the desired speaker.
6. Adjust options by using ▲/▼/◄/► buttons.
7. Press **ENTER**⦿ to return to the previous menu.

Speaker selection

Select a speaker that you want to adjust.

Volume – Press ◄/► to adjust the output level of the selected speaker.

Test – Press ◄/► to test the signals of each of speakers. Adjust the volume to match the volume of test signals memorized in the system.

DRC (Dynamic Range Control)

Make the sound clear when the volume is turned down (Dolby Digital only). Set to [On] for this effect.

Vocal

Select [On] to mix karaoke channels into normal stereo.
This function is effective for multi-channel karaoke DVDs only.

LOCK (Parental Control)

Initial Setting of the Area Code

When you use this unit for the first time, you have to set the Area Code as shown below.

1. Press **SETUP** on the remote control.
2. Select the [Lock] menu and then press ►.
3. Press ►. To access the [Lock] options, you must input the password you have created. Input a password and press **ENTER**⦿. Enter it again and press **ENTER**⦿ to verify. If you make a mistake before pressing **ENTER**⦿, press **CLEAR**.
4. Select the first character by using ▲/▼ buttons.
5. Press ► and select the second character by using ▲/▼ buttons.
6. Press **ENTER**⦿ to confirm your Area code selection.

Rating

Blocks playback of rated DVDs based on their contents. Not all discs are rated.

1. Select [Rating] on the [Lock] menu then press ►.
2. Input a password and press **ENTER**⦿.
3. Select a rating from 1 to 8 by using the ▲/▼ buttons.

[Rating 1-8]

Rating one (1) has the most restrictions and rating eight (8) is the least restrictive.

[Unlock]

If you select unlock, parental control is not active and the disc plays in full.

4. Press **ENTER**⦿ to confirm your rating selection.

Password

You can enter or change password.

1. Select [Password] on the [Lock] menu and then press ▶.
2. Input a password and press **ENTER**⦿.

   To change the password, press **ENTER**⦿ when the [Change] option is highlighted. Input a password and press **ENTER**⦿. Enter it again and press **ENTER**⦿ to verify.
3. Press **SETUP** to exit the menu.

Note

If you forget your password, you can clear it by using the following steps:

1. Press **SETUP** to display the Setup menu.
2. Input the 6-digit number "210499" and press **ENTER**⦿. The password is cleared.

Area Code

Enter the code of the area whose standards were used to rate the DVD video disc, based on the list on page 34.

1. Select [Area Code] on the [Lock] menu then press ▶.
2. Input a password and press **ENTER**⦿.
3. Select the first character by using ▲/▼ buttons.
4. Press ▶ and select the second character by using ▲/▼ buttons.
5. Press **ENTER**⦿ to confirm your Area code selection.

OTHERS

DivX(R) Registration

ABOUT DIVX VIDEO: DivX® is a digital video format created by DivX, LLC, a subsidiary of Rovi Corporation. This is an official DivX Certified® device that plays DivX video. Visit divx.com for more information and software tools to convert your files into DivX videos.

ABOUT DIVX VIDEO-ON-DEMAND: This DivX Certified® device must be registered in order to play purchased DivX Video-on-Demand (VOD) movies. To obtain your registration code, locate the DivX VOD section in your device setup menu. Go to vod.divx.com for more information on how to complete your registration.

Note

All the downloaded videos from DivX(R) VOD with this unit's registration code can be played on this unit.

Basic Operations

Disc/USB Operations

1. Insert the disc by pressing ⏏(OPEN/CLOSE) on the remote control or by pressing **OPEN/ CLOSE** on the unit.
   Connect the USB device to the USB port.
2. Select the DVD/CD or USB function by pressing **FUNCTION** on the remote control or by pressing **DVD/CD** or **USB** on the unit.
3. Select a file (or track/ title) you want to play by pressing ▲/▼/◄/► on the remote control or ⏮/⏭ on the unit.

Note

- When playing a disc or USB Flash Drive containing with DivX, MP3/ WMA and JPEG files together, you can select menu of files which you would like to play by pressing **MENU** on the remote control.
- For the most Audio CD and DVD-ROM discs, playback starts automatically.
- The unit plays only music file contained in the USB storage device or disc automatically. (except for folder)

To	Do this
Stop	Press ■(STOP) on the remote control or **STOP** on the unit.
Playback	Press **MONO/STEREO►** on the remote control or > (PLAY) on the unit.
Pause	During playback, press ❚❚ (PAUSE) on the remote control or **SET/CD ❚❚** on the unit.
Frame-by-Frame playback	Press ❚❚(PAUSE) on the remote control or **SET/CD ❚❚** on the unit repeatedly to play title Frame-by-Frame. (DVD, DivX only)
Skipping to the next/previous chapter/ track/ file	During playback, press ►►❚ on the remote control or ⏭ on the unit to go to the next chapter/ track/ file. After playback, press ❚◄◄ on the remote control or ⏮ on the unit within 3 seconds to step back to the previous chapter /track /file. And press ❚◄◄ on the remote control or ⏮ on the unit after 3 seconds to return to the beginning of the current chapter /track /file.
Locating a point quickly by playing a file in fast forward or fast reverse	During playback, press and hold ◄◄/►► on the remote control repeatedly or ⏮/⏭ on the unit to select the required scan speed. To return to normal speed, press **MONO/STEREO►** on the remote control.
Slowing down the playing speed	In the pause mode, press ◄◄/►► on the remote control to select the required speed. (DVD only)
Playing repeatedly or randomly	Press **REPEAT** on the remote control repeatedly, and the current title/chapter/track/file will be played back repeatedly or randomly. - Random play mode : only music files.

Note

The display window will be changed in the following order.

- USB : REPEAT / REPEAT ALL / RANDOM / OFF
- MP3/WMA CD : REPEAT / REPEAT ALL / RANDOM / OFF
- Audio CD : REPEAT / REPEAT ALL / RANDOM / OFF

Tape Operations

1. Press **FUNCTION** on the remote control or **TAPE/DEMO** on the unit to select tape function.
2. Open a cassette tape door by pushing ☐ ⏏ (STOP/OPEN).
3. Load a cassette tape with the side you want to play facing forward.

To	Do this
Stop	Press ☐ ⏏ (STOP/OPEN) on the top panel.
Play	Press > (PLAY) on the top panel to start playback.
Pause	During playback, press ❚❚ (PAUSE) on the top panel. Press ❚❚ (PAUSE) to resume playback.
Fast-forward or rewind	Press ≪ / ≫ (REW/FF) .

Recording on USB

You can record sounds of tape on USB.

1. Connect the USB device to the unit.
2. Press **FUNCTION** on the remote control or **TAPE/DEMO** to select the tape function.
3. Load a cassette tape with the side you want to record facing forward.
4. Press > (PLAY) on the top panel. Then "checking" will be displayed in the display window.
5. **REC●** on the remote control or **R** on the unit to start recording.
6. To stop recording, Press ■ (STOP) on the remote control or **STOP** on the unit.
7. If you want to record the sounds of tape, start recording during playback.

Other Operations

Displaying Disc Information on-screen

You can display various information about the disc loaded on-screen.

1. Press **DISPLAY** on the remote control to show various playback information.
   The displayed items differ depending on the disc type or playing state.
2. You can select an item by pressing ▲/▼ and change or select the setting by pressing ◄/►.

Title	-	Current title number/total number of titles.
Chapter	-	Current chapter number/total number of chapters.
Time	-	Elapsed playing time Selected total time of current title/file.
Audio	-	Selected audio language or channel.
Subtitle	-	Selected subtitle.
Angle	-	Selected angle/total number of angles.
Sound	-	Selected sound mode

Note

If any button is not pressed for a few seconds, the on-screen display disappears.

To display the DVD Menu

DVD

When you play a DVD which contains several menus, you can select the menu you want by using **MENU**.

1. Press **MENU** on the remote control.
   The disc's menu appears.
2. Select the menu by using ▲/▼/◄/►.
3. Press **ENTER⊙** to confirm.

To display the DVD title

DVD

When you play a DVD which contains several titles, you can select the title you want by using the **TITLE**.

1. Press **TITLE** on the remote control.
   The disc's title appears.
2. Select the menu by pressing ▲/▼/◄/►.
3. Press **ENTER⊙** to confirm.

Selecting a subtitle language

MOVIE DVD

During playback, press **S-TITLE** on the remote control repeatedly to select a desired subtitle language.

1.5 times speed playback

DVD

The 1.5 speed allows you to watch the pictures and to listen to the sound quicker than to play at a normal speed.

1. During playback, press **MONO/STEREO►** on the remote control or >(PLAY) on the unit to play at 1.5 times speed. "►X1.5" will appear on the screen.
2. Press **MONO/STEREO►** on the remote control or >(PLAY) on the unit again to exit.

Starting play from selected time

MOVIE DVD

To start playing at any chosen time on the file or title

1. Press **DISPLAY** on the remote control during playback.
2. Press ▲/▼ to select the time clock icon and "--:--:--" appears.
3. Input the required start time in hours, minutes, and seconds from left to right. If you enter the wrong numbers, press **CLEAR** to remove the numbers you entered. Then input the correct numbers.
   For example, to find a scene at 1 hour, 10 minutes, and 20 seconds, enter "11020" by using numerical buttons.
4. Press **ENTER⊙** to confirm. Playback starts from the selected time.

Last Scene Memory

DVD

This unit memorizes last scene from the last disc that is viewed. The last scene remains in memory even if you remove the disc from the unit or switch off the unit. If you load a disc that has the scene memorized, the scene is automatically recalled.

Changing the character set to display DivX® subtitle correctly - optional

MOVIE

During playback, if the subtitle does not displayed on the screen properly, press and hold **S-TITLE** on the remote control for about 3 seconds then press **S-TITLE** to select another language code until the subtitle is displayed properly.

Note

If any button is not pressed for about 10 seconds, the language code display disappears.

Programmed Playback

MUSIC

You can play the contents of a disc in the order you want by arranging the order of the songs on the disc. The program is cleared when the disc is removed.

1. Select a desired music file then press **PROG./MEMO.** on the remote control or select "♫→" and then press **ENTER⊙** to add the music file to the program list.
2. To add all music file on the disc, select "♫♫→" and then press **ENTER⊙**.
3. Select a music file from the program list then press **ENTER⊙** to start programmed playback.
4. To clear a music file from the program list, select the music you want to clear then press **CLEAR** or select "♫♫" icon and then press **ENTER⊙**. To clear all music file from the program list, select "♫♫" then press **ENTER⊙**.

Viewing a PHOTO file

PHOTO

This unit can play discs with photo files.

1. Select the DVD/CD or USB function by pressing **FUNCTION** on the remote control or by pressing **DVD/CD** or **USB** on the unit.
2. Press ▲/▼ on the remote control or **|≪/≫|** on the unit to select a folder, and then press **ENTER⊙** on the remote control. A list of files in the folder appears.
   If you are in a file list and want to return to the previous folder list, use ▲/▼ on the remote control or **|≪/≫|** on the unit to highlight ... and press **ENTER⊙** on the remote control or >(PLAY) on the unit.
3. If you want to view a particular file, press ▲/▼ on the remote control or **|≪/≫|** on the unit to highlight a file and press **ENTER⊙** on the remote control or >(PLAY) on the unit. While viewing a file, you can press ■(STOP) on the remote control or **STOP** on the unit to move to the previous menu (JPEG menu).

Viewing a PHOTO file as a slide show

PHOTO

1. Highlight the file (not folder) which you like beginning slide show.
2. Use ▲/▼/◄/► on the remote control to highlight . Then, use ◄/► to select the (3s/ 5s/ 8s) option you want to use and then press **ENTER⊙**.
3. Use ▲/▼/◄/► to highlight then press **ENTER⊙**.

About help menu for slide show.

Menu	Buttons	Operation
▲/▼ ↻90°/ ↺90°	▲/▼	Rotating the picture.
◄/► Prev./ Next	◄/►	Moving to another file.
Close	BACK	Returning to the menu.
⊙ Hide	ENTER⊙	Hiding the help menu.

Setting the Clock

1. Turn the power on.
2. Press **CLOCK** on the unit if you set the clock function for the first time.
   Press and hold **CLOCK** on the unit for at least 2 seconds if you have set the clock function before.
3. Choose from either, by using **|≪/≫|**.
   - AM 12:00 (for an AM and PM display) or 0:00 (for a 24 hour display)
4. Press **SET/CD II** for confirm your selection.
5. Select the hours by using **|≪/≫|**.
6. Press **SET/CD II**.
7. Select the minutes by using **|≪/≫|**.
8. Press **SET/CD II**.
9. If you want to reset the clock, repreat steps 2-8.
10. If you want to stop while setting the clock , press **CLOCK**.

Using your player as an alarm clock

1. Turn the power on.
2. Press **TIMER** on the unit to set the alarm function.
3. Alarm sound sources blink. While each of sound sources blink, select the one you want by pressing **SET/CD II**.
4. "ON TIME" setting is displayed.
   The hour setting blinks. Press **|<</>>|** to select the hour and then press **SET/CD II** to save.
5. The minute setting blinks. Press **|<</>>|** to select the minute and then press **SET/CD II** to save.
6. "OFF TIME" setting is displayed.
   The hour setting blinks. Press **|<</>>|** to select the hour and then press **SET/CD II** to save.
7. The minute setting blinks.
   Press **|<</>>|** to select the minute and then press **SET/CD II** to save.
8. The volume settings blinks.
   Press **|<</>>|** to change the volume and then press **SET/CD II** to save.
9. You can check the setting state.
10. If you want to reset the alarm, repeat steps 2-8.

Sleep Timer Setting

Press **SLEEP** on the remote control repeatedly to select delay time between 10 and 180 minutes. After delay time, the unit will turn off. (You can see the following order, 180 ->150 -> 120 -> 90 -> 80 -> 70 -> 60 -> 50 -> 40 -> 30 -> 20 -> 10)

To cancel the sleep function, press **SLEEP** repeatedly until the display window get bright.

Note

- You can check the remaining time before the unit turns off.
- Press **SLEEP**. The remaining time appears in the display window.
- Sleep function will work after dimmer function.

Note

- After setting a clock function, you can set alarm function.
- If you set the clock time and alarm, you can check the time and alarm icon "◷" by pressing **CLOCK** although the unit is turned off.
- During playback, Press **TIMER** two times when the alarm icon "◷" is displayed. You can check the setting state.
- If you activate the alarm, the alarm icon "◷" will appear in the display window.
- If you deactivate the alarm, the alarm icon "◷" will disappear in the display window.
- Alarm function only works when the unit is turned off.
- If the time you set is up, the unit will be turned on automatically.
- If you select DVD/CD mode for alarm sound source with a DVD/DivX CD on the disc tray, the alarm sound source is switched to TUNER mode automatically.
- If you select USB mode for alarm sound source with multi-device USB, the alarm sound source is switched to TUNER mode automatically.

Dimmer

Press **SLEEP** once. The display window will be darkened by half. To cancel it, press **SLEEP** repeatedly until the display window get bright.

DEMO

In power off state, press **TAPE/DEMO** on the unit once. The unit will power on and display the each of functions in the display window.

Turning off the sound temporarily

Press **MUTE** on the remote control to mute your sound.

You can mute your sound in order, for example, to answer the telephone. And "MUTE" will appear in the display window.

To cancel MUTE function, press **MUTE** again or adjust volume level by pressing **VOL(+/-)**.

Screen Saver

The screen saver appears when you leave the unit in stop mode for about five minutes.

System Select - Optional

You must select the appropriate system mode for your TV system. If "NO DISC" appears in the display window, press and hold ❚❚(PAUSE) on the remote control or **SET/CD** ❚❚ on the unit for more than five seconds to be able to select a system. (AUTO/PAL/NTSC)

Displaying file information (ID3 TAG)

While playing an MP3 file containing file information, you can display the information by pressing **DISPLAY** on the remote control.

AUTO DJ playback

MUSIC

Auto DJ blends the end of one song into the beginning of another for seamless playback. It equalizes volume across tracks/files for uninterrupted playback.

Press **AUTO DJ** on the remote control or unit repeatedly, the display changes as followings order, (AUTO DJ RANDOM) ->(AUTO DJ SEQUENTIAL) -> (AUTO DJ OFF).

Mode	Display Window	Description
OFF	- (AUTO DJ OFF)	-
RANDOM	- (AUTO DJ RANDOM)	The music is played randomly on this mode.
REPEAT	- (AUTO DJ SEQUENTIAL)	The music is played repeatedly on this mode.

Note

- Searching for a section within a track/file or playing repeatedly or randomly is not supported on the AUTO DJ mode.
- If you switch to other functions or stop playback by pressing ■(STOP) on the remote control twice (or **STOP** on the unit) on AUTO DJ mode, AUTO DJ function will be disable.
- AUTO DJ function is not supported in the music file whose length is less than 60 seconds.
- All musics are repeated continuously until the user deactivates the AUTO DJ function.
- During the AUTO DJ operation, SCAN function is not available.
- During recording, AUTO DJ function is not available.
- If you change a disc while the AUTO DJ function is activated, the function is deactivated.

Using Microphone

1. Connect your microphone to the **MIC 1, 2** on the unit.
2. Play the music you want.
3. Sing along with the accompaniment. Adjust the microphone volume by pressing **MIC VOL (+/-)** on the remote control.

Note

- When not using the microphone, set the microphone volume as low as possible or turn off the MIC. And then remove the microphone from the **MIC 1, 2**.
- If the microphone is set too near the speaker, a howling sound may be produced. In this case, move the microphone away from the speaker or decrease the sound level by using the **MIC VOL (+/-)**.
- If sound through the microphone is extremely loud, it may be distorted. In this case, press **MIC VOL (+/-)** to adjust the volume.

Radio Operations

Be sure that both FM aerial is connected. (Refer to the page 15)

Listening to the radio

1. Press **FUNCTION** on the remote control repeatedly or **TUNER** on the unit until FM appears in the display window. The last received station is tuned in.
2. Auto tuning : Press **TUNING (-/+)** for about 2 seconds until the frequency indication starts changing, then release. scanning stops when the unit tunes in a station.

   Manual tuning: Press **TUNING(-/+**) repeatedly.
3. Adjust the volume by rotating Volume knob on the front panel or by pressing **VOL (+/-)** on the remote control repeatedly.

Presetting the Radio Stations

You can preset 50 stations for FM.
Before tuning, make sure that you have turned down the volume.

1. Press **FUNCTION** on the remote control repeatedly or **TUNER** on the unit until FM appears in the display window.
2. Select the desired frequency by using **TUNING(-/+)**.
3. Press **PROG./MEMO.** on the remote control. Preset number will blink in the display window.
4. Press **PRESET(▲/▼)** on the remote control or **PRESET(-/+)** on the unit to select the preset number you want.
5. Press **PROG./MEMO.** The station is stored.
6. Repeat the steps 2 to 5 to store other stations.
7. To listen a preset station, press **PRESET(▲/▼)** on the remote control or **PRESET(-/+)** on the unit.

Deleting all the saved stations

1. Press and hold **PROG./MEMO.** for two seconds. "ERASE ALL" will blink in the display window.
2. Press **PROG./MEMO.** to erase all saved radio stations.

Improving poor FM reception

Press **MONO/STEREO►** on the remote control. This will change the tuner from stereo to mono. Then the reception will be better than before.

Sound adjustment

Setting the surround mode

This system has a number of pre-set surround sound fields. You can select a desired sound mode by using **SOUND EFFECT♬** on the remote control or **LG EQ/EQ/BASS BLAST/MP3 OPT.** on the unit.

You can change the LG EQ/EQ by using **SOUND EFFECT♬** on the remote control or **LG EQ/EQ/BASS BLAST/MP3 OPT.** on the unit while the sound effect information is displayed on.

The displayed items for the equalizer may be different depending on sound sources and effects.

On Display	Description
NATURAL	You can enjoy comfortable and natural sound.
Local Specialization equalizer	Regionally optimized sound effect. (DANGDUT/ ARABIC/ PERSIAN/ INDIA/REGUETON/ MERENGUE/SAMBA/SALSA)
AUTO EQ	Sets the sound equalizer on the mode that is the most similar to the genre which is included in the MP3 ID3 tag of song files.
POP CLASSIC JAZZ ROCK	This program lends an enthusiastic atmosphere to the sound, giving you the feeling you are at an actual rock pop, jazz or classic concert.
MP3 - OPT	This function is optimized for compressible MP3 file. It improves the treble sound.
BASS BLAST	Reinforces the treble, bass and surround sound effect.
VIRTUAL	You can enjoy more virtual surround sound.
BYPASS	You can enjoy the sound without equalizer effect.

Note

- In some of surround modes, some speakers, there's no sound or low sound. Depending on the mode of surround and the source of audio, it is not defective.
- You may need to reset the surround mode, after switching the input, sometimes even after the sound track changed.
- You can not choose the VIRTUAL option, when the MIC is connected to the unit.

Setting the USER EQ

You can listen to music with the desired sound effect by adjusting the BASS, MIDDLE and TREBLE.

1. Press **USER EQ** on the unit.
   "USER EQ" is displayed.
2. Press **SET/CD ❚❚** to enter the USER EQ.
3. Select the BASS, MIDDLE or TREBLE sound effect you want by using **PRESET(-/+)**.
4. Press **TUNING(-/+)** to select the sound level you want.
5. To finish the setting, press **SET/CD ❚❚**.

Advanced Operations

Listening to music from your external device

The unit can be used to play the music from many types of external devices. (Refer to the page 17)

1. Connect the external device to the AUX IN connector of the unit.
2. Turn the power on by pressing ⏻(POWER) on the remote control or ⏻/❙(POWER) on the unit.
3. Select the AUX function by pressing **FUNCTION** on the remote control or **AUX** on the unit.
4. Turn the external device on and start playing it .

Recording on USB

You can record various sound sources on USB.

1. Connect the USB device to the unit.
2. Select a function you want to record first.
3. Press **REC●** on the remote control or **R** on the unit.

   One track/file recording - You can record a track/a file on USB while playing the file you want.
   All tracks/files recording - You can record tracks/files on USB in stop state.
   Program list recording - After making program list, you can record it on USB.
4. To stop recording, press ■(STOP) on the remote control or **STOP** on the unit.

Note

- You can check the recording percentage rate for the USB record in the display window during recording. (MP3/ WMA CD/ AUDIO CD Only)
- During recording, MP3/ WMA, there is no sound.
- When you stop recording during playback, the file that has been recorded at that time will be stored. (AUDIO CD Only)
- Do not remove the USB device or turn off the unit during USB recording. If not, an incomplete file may be made and not be deleted on PC.
- If USB recording does not work, the message like "NO USB", "ERROR", "USB FULL" or "NO REC" is displayed in the display window.
- Multi card reader device or External HDD can not be used for USB recording.
- A file is recorded by 2 hours (about 128 Mbytes) when you record for a long term.
- In the state CD-G disc, USB record is not operated.
- You may not record more than 999 files.
- The file number is saved automatically.
- It'll be stored as follows.

AUDIO CD	MP3/ WMA	The other source*
CD_REC TRK_001 TRK_002 ⋮	FILE_REC 001_ ABC(File name) 002_ DEF(File name) ⋮	EXT_REC AUD_001 AUD_002 ⋮

* : TUNER, AUX and the like.

The making of unauthorized copies of copy-protected material, including computer programs, files, broadcasts and sound recordings, may be an infringement of copyrights and constitute a criminal offense. This equipment should not be used for such purposes.

Be responsible
Respect copyrights

Recording on tape

Basic Setting

1. Select a function you want to record by pressing **FUNCTION** on the remote control or each of function buttons on the unit except tape function.
2. Open the cassette tape compartment and insert a blank cassette tape into the cassette tape compartment.

Recording Radio, CD or Auxiliary source

1. Press **FUNCTION** on the remote control or each of function buttons on the unit to select desired recording source, and then press ●(RECORD).
   The recording start.

   For your reference.
   When you press ●(RECORD), >(PLAY) is also pressed automatically.
2. To pause recording
   Press ❚❚(PAUSE) during recording. Press ❚❚(PAUSE) again to resume recording.
3. To stop recording
   During recording Press □ ⏏ (STOP/OPEN).

Troubleshooting

Problem	Correction
No Power.	Plug in the power cord.
No picture.	• Select the appropriate video input mode on the TV. Then the picture from the unit appears on the TV screen. • Connect the video cables securely to the TV and the unit.
There is little or no sound.	• Select the correct input mode of the unit. Then you can hear the sound from the unit. • Connect the speaker cables to the connection terminals correctly. • Use the volume knob on the unit or **VOL(+/-)** on the remote control to adjust the volume.
A DVD/CD will not play.	• Insert a playable disc.(check the disc type, color system and regional code) • Insert a disc. • Place the disc with the label or printed side facing upwards. • Enter your password or change the rating level.
Humming noise heard while a DVD or CD is playing.	• Clean the disc by using a soft cloth with outward strokes. • Move unit and audio components further away from your TV.
Radio stations cannot be tuned in properly.	• Adjust antena's position. • Tune to the station manually. • Preset some radio stations, see page 30 for details.
The remote control does not work properly.	• Point the remote control at the remote sensor of the unit. • Operate the remote control within about 23 ft (7 m). • Remove the obstacle in the path of the remote control and the unit. • Replace the batteries with new ones.

Area Codes

Choose an area code from this list.

Area	Code	Area	Code	Area	Code	Area	Code
Afghanistan	AF	Fiji	FJ	Monaco	MC	Singapore	SG
Argentina	AR	Finland	FI	Mongolia	MN	Slovak Republic	SK
Australia	AU	France	FR	Morocco	MA	Slovenia	SI
Austria	AT	Germany	DE	Nepal	NP	South Africa	ZA
Belgium	BE	Great Britain	GB	Netherlands	NL	South Korea	KR
Bhutan	BT	Greece	GR	Antilles	AN	Spain	ES
Bolivia	BO	Greenland	GL	New Zealand	NZ	Sri Lanka	LK
Brazil	BR	Hong Kong	HK	Nigeria	NG	Sweden	SE
Cambodia	KH	Hungary	HU	Norway	NO	Switzerland	CH
Canada	CA	India	IN	Oman	OM	Taiwan	TW
Chile	CL	Indonesia	ID	Pakistan	PK	Thailand	TH
China	CN	Israel	IL	Panama	PA	Turkey	TR
Colombia	CO	Italy	IT	Paraguay	PY	Uganda	UG
Congo	CG	Jamaica	JM	Philippines	PH	Ukraine	UA
Costa Rica	CR	Japan	JP	Poland	PL	United States	US
Croatia	HR	Kenya	KE	Portugal	PT	Uruguay	UY
Czech Republic	CZ	Kuwait	KW	Romania	RO	Uzbekistan	UZ
Denmark	DK	Libya	LY	Russian Federation	RU	Vietnam	VN
Ecuador	EC	Luxembourg	LU	Saudi Arabia	SA	Zimbabwe	ZW
Egypt	EG	Malaysia	MY	Senegal	SN		
El Salvador	SV	Maldives	MV				
Ethiopia	ET	Mexico	MX				

Language Codes

Use this list to input your desired language for the following initial settings: Disc Audio, Disc Subtitle, Disc Menu.

Language	Code	Language	Code	Language	Code	Language	Code
Afar	6565	French	7082	Lithuanian	7684	Sindhi	8368
Afrikaans	6570	Frisian	7089	Macedonian	7775	Singhalese	8373
Albanian	8381	Galician	7176	Malagasy	7771	Slovak	8375
Amharic	6577	Georgian	7565	Malay	7783	Slovenian	8376
Arabic	6582	German	6869	Malayalam	7776	Spanish	6983
Armenian	7289	Greek	6976	Maori	7773	Sudanese	8385
Assamese	6583	Greenlandic	7576	Marathi	7782	Swahili	8387
Aymara	6588	Guarani	7178	Moldavian	7779	Swedish	8386
Azerbaijani	6590	Gujarati	7185	Mongolian	7778	Tagalog	8476
Bashkir	6665	Hausa	7265	Nauru	7865	Tajik	8471
Basque	6985	Hebrew	7387	Nepali	7869	Tamil	8465
Bengali; Bangla	6678	Hindi	7273	Norwegian	7879	Telugu	8469
Bhutani	6890	Hungarian	7285	Oriya	7982	Thai	8472
Bihari	6672	Icelandic	7383	Panjabi	8065	Tonga	8479
Breton	6682	Indonesian	7378	Pashto, Pushto	8083	Turkish	8482
Bulgarian	6671	Interlingua	7365	Persian	7065	Turkmen	8475
Burmese	7789	Irish	7165	Polish	8076	Twi	8487
Byelorussian	6669	Italian	7384	Portuguese	8084	Ukrainian	8575
Chinese	9072	Japanese	7465	Quechua	8185	Urdu	8582
Croatian	7282	Kannada	7578	Rhaeto-Romance	8277	Uzbek	8590
Czech	6783	Kashmiri	7583	Rumanian	8279	Vietnamese	8673
Danish	6865	Kazakh	7575	Russian	8285	Volapük	8679
Dutch	7876	Kirghiz	7589	Samoan	8377	Welsh	6789
English	6978	Korean	7579	Sanskrit	8365	Wolof	8779
Esperanto	6979	Kurdish	7585	Scots Gaelic	7168	Xhosa	8872
Estonian	6984	Laotian	7679	Serbian	8382	Yiddish	7473
Faroese	7079	Latin	7665	Serbo-Croatian	8372	Yoruba	8979
Fiji	7074	Latvian, Lettish	7686	Shona	8378	Zulu	9085
Finnish	7073	Lingala	7678				

Specifications

General	
Power supply	Refer to main label.
Power consumption	Refer to main label.
Net Weight	6.5 kg
External dimensions (W x H x D)	272x345x380 mm
Operating conditions Temperature	5 °C to 35 °C (41 °F to 95 °F) Operation status: Horizontal
Operating humidity	5 % to 85 %

Inputs/ Outputs	
VIDEO OUT	1.0V (p-p), 75Ω, sync negative, RCA jack x1
COMPONENT VIDEO OUT	(Y) 1.0V (p-p), 75Ω, sync negative, RCA jack x1
AUX. IN	0.6V (RCA jack x2)

Tuner	
FM Tuning Range	87.5 to 108.0MHz or 87.50 to 108.00MHz

Amplifier	
Output Power	Front : 110W x 2 (4Ω) Subwoofer : 160W (3Ω)
T.H.D	≤15 %
Frequency Response	45Hz to 20kHz
Signal-to-noise ratio	75dB

DVD/CD player	
Frequency response (audio)	100 Hz to 18 kHz
Signal-to-noise ratio (audio)	More than 75 dB (1 kHz)
Signal-to-noise ratio (video)	More than 55 dB (1 kHz)
Dynamic range (audio)	More than 80 dB

USB	
USB Version	USB 2.0 or USB 1.1
Bus Power Supply	DC 5 V ⎓ 500 mA

Cassette tape player	
Tape Speed	3000 ± 90 Hz
Wow Flutter	0.3%
F.F/REW. Time	120 sec
Frequency Response	125 Hz to 8kHz
Signal to Noise Ratio	43 dB
Channel Separation	50 dB
Erase Ratio	55 dB

Front Speakers	
Type	2 Way 2 Speaker
Impedance	4 Ω
Rated Input Power	110 W
Max. Input Power	220 W
Net Dimensions (WxHxD)	222 x 344 x 261 mm
Net Weight(1EA)	3.4 kg

Passive Subwoofer	
Type	1 Way 1 Speaker
Impedance	3 Ω
Rated Input Power	160 W
Max. Input Power	320 W
Net Dimensions (WxHxD)	272 x 332 x 317 mm
Net Weight(1EA)	5.3 kg

- Design and specifications are subject to change without notice.

Maintenance

Handling the Unit

When shipping the unit

Please save the original shipping carton and packing materials. If you need to ship the unit, for maximum protection, re-pack the unit as it was originally packed at the factory.

Keeping the exterior surfaces clean

Do not use volatile liquids such as insecticide spray near the unit.

Wiping with strong pressure may damage the surface.

Do not leave rubber or plastic products in contact with the unit for a long period of time.

Cleaning the unit

To clean the player, use a soft, dry cloth. If the surfaces are extremely dirty, use a soft cloth lightly moistened with a mild detergent solution. Do not use strong solvents such as alcohol, benzine, or thinner, as these might damage the surface of the unit.

Maintaining the Unit

The unit is a high-tech, precision device. If the optical pick-up lens and disc drive parts are dirty or worn, the picture quality could be diminished. For details, please contact your nearest authorized service center.

Notes on Discs

Handling Discs

Never stick paper or tape on the disc.

Storing Discs

After playing, store the disc in its case. Do not expose the disc to direct sunlight or sources of heat and never leave it in a parked car exposed to direct sunlight.

Cleaning Discs

Do not use strong solvents such as alcohol, benzine, thinner, commercially available cleaners, or anti-static spray intended for older vinyl records.

Trademarks and Licenses

Dolby, Pro Logic, and the double-D symbol are registered trademarks of Dolby Laboratories.

"DVD Logo" is a trademark of DVD Format/Logo Licensing Corporation.

DivX®, DivX Certified® and associated logos are trademarks of Rovi Corporation or its subsidiaries and are used under license.

LG
Life's Good