LG
Life's Good

ENGLISH
DEUTSCH
FRANÇAIS
NEDERLANDS
SLOVENŠČINA
ITALIANO
ESPAÑOL
ΕΛΛΗΝΙΚΑ
PORTUGUÊS

OWNER'S MANUAL

Mini Hi-Fi System

Please read this manual carefully before operating your set and retain it for future reference.

CM4620 (CM4620, CMS4620F),
CM4520 (CM4520, CMS4520F, CMS4520W)
CM4420 (CM4420, CMS4520F), CM4320 (CM4320, CMS4320F)

MFL67412317

CM4320-DU.DDEULL_ENG.indd 1 2012-02-29 2:15:04

Safety Information



CAUTION: TO REDUCE THE RISK OF ELECTRIC SHOCK DO NOT REMOVE COVER (OR BACK) NO USER-SERVICEABLE PARTS INSIDE REFER SERVICING TO QUALIFIED SERVICE PERSONNEL.



This lightning flash with arrowhead symbol within an equilateral triangle is intended to alert the user to the presence of uninsulated dangerous voltage within the product's enclosure that may be of sufficient magnitude to constitute a risk of electric shock to persons.



The exclamation point within an equilateral triangle is intended to alert the user to the presence of important operating and maintenance (servicing) instructions in the literature accompanying the product.

WARNING: TO PREVENT FIRE OR ELECTRIC SHOCK HAZARD, DO NOT EXPOSE THIS PRODUCT TO RAIN OR MOISTURE.

WARNING: Do not install this equipment in a confined space such as a book case or similar unit.

CAUTION: Do not block any ventilation openings. Install in accordance with the manufacturer's instructions.
Slots and openings in the cabinet are provided for ventilation and to ensure reliable operation of the product and to protect it from over heating. The openings shall be never be blocked by placing the product on a bed, sofa, rug or other similar surface. This product shall not be placed in a built-in installation such as a bookcase or rack unless proper ventilation is provided or the manufacturer's instruction has been adhered to.



CAUTION: This product employs a Laser System.
To ensure proper use of this product, please read this owner's manual carefully and retain it for future reference. Shall the unit require maintenance, contact an authorized service centre.
Use of controls, adjustments or the performance of procedures other than those specified herein may result in hazardous radiation exposure.
To prevent direct exposure to laser beam, do not try to open the enclosure.

CAUTION concerning the Power cord

Most appliances recommend they be placed upon a dedicated circuit;

That is, a single outlet circuit which powers only that appliance and has no additional outlets or branch circuits. Check the specification page of this owner's manual to be certain. Do not overload wall outlets. Overloaded wall outlets, loose or damaged wall outlets, extension cords, frayed power cords, or damaged or cracked wire insulation are dangerous. Any of these conditions could result in electric shock or fire. Periodically examine the cord of your appliance, and if its appearance indicates damage or deterioration, unplug it, discontinue use of the appliance, and have the cord replaced with an exact replacement part by an authorized service center. Protect the power cord from physical or mechanical abuse, such as being twisted, kinked, pinched, closed in a door, or walked upon. Pay particular attention to plugs, wall outlets, and the point where the cord exits the appliance. To disconnect power from the mains, pull out the mains cord plug. When installing the product, ensure that the plug is easily accessible.

This device is equipped with a portable battery or accumulator.

Safety way to remove the battery or the battery from the equipment: Remove the old battery or battery pack, follow the steps in reverse order than the assembly. To prevent contamination of the environment and bring on possible threat to human and animal health, the old battery or the battery put it in the appropriate container at designated collection points. Do not dispose of batteries or battery together with other waste. It is recommended that you use local, free reimbursement systems batteries and accumulators. The battery shall not be exposed to excessive heat such as sunshine, fire or the like.

CAUTION: The apparatus shall not be exposed to water (dripping or splashing) and no objects filled with liquids, such as vases, shall be placed on the apparatus.

Disposal of your old appliance



1. When this crossed-out wheeled bin symbol is attached to a product it means the product is covered by the European Directive 2002/96/EC.
2. All electrical and electronic products should be disposed of separately from the municipal waste stream via designated collection facilities appointed by the government or the local authorities.
3. The correct disposal of your old appliance will help prevent potential negative consequences for the environment and human health.
4. For more detailed information about disposal of your old appliance, please contact your city office, waste disposal service or the shop where you purchased the product.

Disposal of waste batteries/accumulators



1. When this crossed-out wheeled bin symbol is attached to batteries/ accumulators of Your product it means they are covered by European Directive 2006/66/EC.
2. This symbol may be combined with chemical symbols for mercury(Hg), cadmium(Cd) or lead(Pb) if the battery Contains more that 0.0005% of mercury, 0.002% of cadmium or 0.004% of lead.
3. All batteries/accumulators should be disposed separately from the municipal waste stream via designated collection facilities appointed by the government or the local authorities.
4. The correct disposal of Your old batteries/ accumulators will help to prevent potentialnegative consequences for the environment, animal and human health.
5. For more detailed information about disposal of Your old batteries/ accumulators, please contact Your city offi ce, waste disposal service or the shop where You purchased the product.

CE LG Electronics hereby declares that this/ these product(s) is/are in compliance with the essential requirements and other relevant provisions of Directive 2004/108/ EC, 2006/95/EC and 2009/125/EC.

European Standards Centre:
Veluwezoom 15, 1327 AE Almere, The Netherlands
(Tel : +31-(0)36-547-8888)

- Please note that this is NOT a Customer Service contact point. For Customer Service Information, see Warranty Card or contact the dealer that you purchased this product.

You have to set the disc format option to [Mastered] in order to make the discs compatible with the LG players when formatting rewritable discs. When setting the option to Live File System, you cannot use it on LG players.

(Mastered/Live File System : Disc format system for Windows Vista)

Table of Contents

1 Getting Started

2 Safety Information
6 Unique Features
6 Accesories
6 Playable file Requirement
6 – MP3/WMA music file requirement
6 – Compatible USB Devices
6 – USB device requirement
7 Remote control
8 Front panel
10 Rear panel

2 Connecting

11 Connecting to speakers
11 – Attaching the speakers to the unit
11 Optional Equipment Connection
11 – AUX IN Connection
12 – USB Connection
12 – Antenna Connection

3 Operating

13 Basic Operations
13 – CD/USB Operations
13 Other Operations
13 – Programmed Playback
13 – Displaying file information (ID3 TAG)
13 – Searching for a folder
14 – Turn off the sound temporarily
14 – Deleting an MP3/WMA file
14 – DEMO
15 – AUTO DJ playback
15 Radio Operations
15 – Listening to the radio
16 – Presetting the Radio Stations
16 – Deleting all the saved stations
16 – Improving poor FM reception
16 – Seeing information about a Radio station
17 Sound adjustment
17 – Setting the surround mode
17 Setting the Clock
18 – Setting the alarm
18 – Sleep Timer Setting
18 – Dimmer
19 Advanced Operations
19 – Listening to the sound from your external device
19 – Recording to USB
20 – To select recording bit rate and speed
20 – Dubbing USB to USB

4 Troubleshooting

21 Troubleshooting

5 Appendix

22 Trademarks and Licenses
23 Specifications
24 Speaker specifications
25 Maintenance
25 – Notes on Discs
25 – Handling the Unit

Unique Features

USB Direct Recording

Records music to your USB device.

Accesories

Please check and identify the supplied accessories.

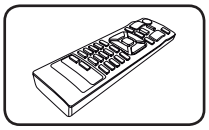

Remote Control (1)

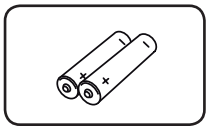

Batteries (2)

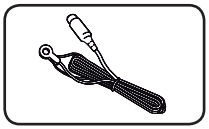

FM Antenna (1)

Playable file Requirement

MP3/WMA music file requirement

MP3/WMA file compatibility with this unit is limited as follows :

- Sampling frequency : within 32 to 48 kHz (MP3), within 32 to 48 kHz (WMA)
- Bit rate : within 32 to 320 kbps (MP3), 40 to 192 kbps (WMA)
- Maximum files : Under 999
- File extensions : ".mp3"/".wma"
- CD-ROM file format : ISO9660/JOLIET
- We recommend that you use Easy-CD Creator, which creates an ISO 9660 file system.

Compatible USB Devices

- MP3 Player : Flash type MP3 player.
- USB Flash Drive : Devices that support USB2.0 or USB1.1.
- The USB function of this unit does not support all USB devices.

USB device requirement

- Devices which require additional program installation when you have connected it to a computer, are not supported.
- Do not extract the USB device while in operation.
- For a large capacity USB, it may take longer than a few minute to be searched.
- To prevent data loss, back up all data.
- If you use a USB extension cable or USB hub, the USB device is not recognized.
- Using NTFS file system is not supported. (Only FAT(16/32) file system is supported.)
- This unit is not supported when the total number of files is 1 000 or more.
- External HDD, Card readers, Locked devices, or hard type USB devices are not supported.
- USB port of the unit cannot be connected to PC. The unit cannot be used as a storage device.

Remote control

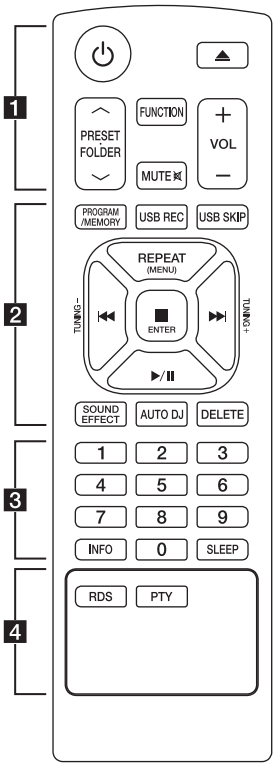

Battery Installation

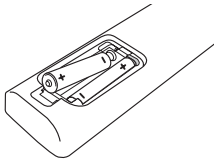

Remove the battery cover on the rear of the Remote Control, and insert two R03 (size AAA) batteries with ⊕ and ⊖ matched correctly.

• • • • • • **1** • • • • • •

⏻ (POWER) **:** Switches the unit ON or OFF.

⏏ (OPEN/CLOSE) **:** Opens and closes the disc tray.

PRESET·FOLDER ∧/∨ :

- Searches for a folder of MP3/WMA files. When a CD/USB containing MP3/WMA files in several folders is being played, press **PRESET·FOLDER ∧/∨** to select the folder you want to play.
- Chooses a preset number for a radio station.

FUNCTION : Selects the function and input source.

MUTE : Mutes the sound.

VOL +/- : Adjusts speaker volume.

• • • • • • **2** • • • • • •

PROGRAM/MEMORY :

- For storing radio stations if you have saved radio stations by using **PROGRAM/MEMORY**, you can scroll through them and select one.
- Listens to your tracks/files in any order.

USB REC : USB direct recording.

USB SKIP : Switches between USB 1 and USB 2.

REPEAT(MENU) : Listens to your tracks/files repeatedly or randomly.

TUNING-/+ : Selects the radio station.

⏮/⏭ (Skip/Search) **:**

- Skips Fast backward or Forward.
- Searches for a section within a track/file.

■ ENTER :

- Stops playback or recording.
- Cancels DELETE function.

▶/II (Play/Pause) **:**

- Starts or pauses playback.
- Selects STEREO/MONO.

SOUND EFFECT : Chooses sound impressions.

AUTO DJ : Selects the AUTO DJ mode. (For more information refer to the page 15)

DELETE : Deletes MP3/WMA files.

• • • • • • **3** • • • • • •

0 to **9** numerical buttons **:** Selects numbered tracks/files, or preset number.

INFO : Sees informations about your music. An MP3 file often come with ID3 tag. The tag gives the Title, Artist, Album or Time information.

SLEEP : Sets the system to turn off automatically at a specified time. (Dimmer : The display window will be darkened by half.)

• • • • • • **4** • • • • • •

RDS/PTY : RDS (Radio Data System)/Searches radio stations by radio type.

Front panel

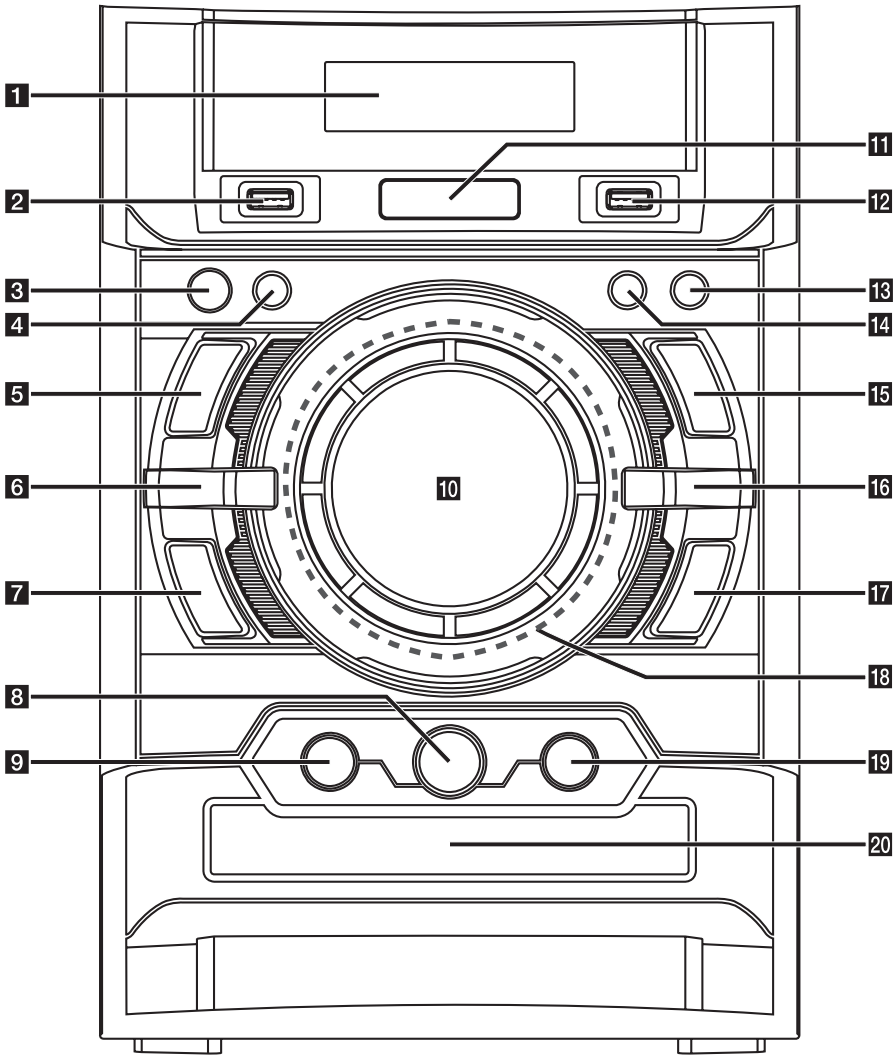

1 Display window

2 USB 1
You can play or record sound files by connecting the USB device.

3 ⏻/❙ (Power)

4 **TIMER**
With the TIMER function you can turn CD, USB play and TUNER reception on or off at a desired time.

5 □
Stops playback or recording.

6 **BASS BLAST**
Reinforces the treble, bass and surround effect.

7 ❙≪ (Skip/Search)

8 **AUTO DJ**
Selects the AUTO DJ mode.
(For more informaion refer to the page 15)

9 **LG EQ**
Chooses sound impressions.

10 **VOLUME**

11 **R USB REC**
Records to USB.

12 USB 2
You can play or record sound files by connecting the USB device.

13 **CLOCK**
For setting the clock and checking the time.

14 **SET/RDS/DEMO**
Confirms the setting
RDS (Radio Data System).
Shows demo.

15 **>II ST./MO.**
Starts playback and pauses.
Selects Stereo/Mono.

16 **FUNC.**
Selects the function or input source.

17 ≫❙ (Skip/Search)

18 Backlightings

19 ⏏ (OPEN/CLOSE)

20 Disc tray

Rear panel

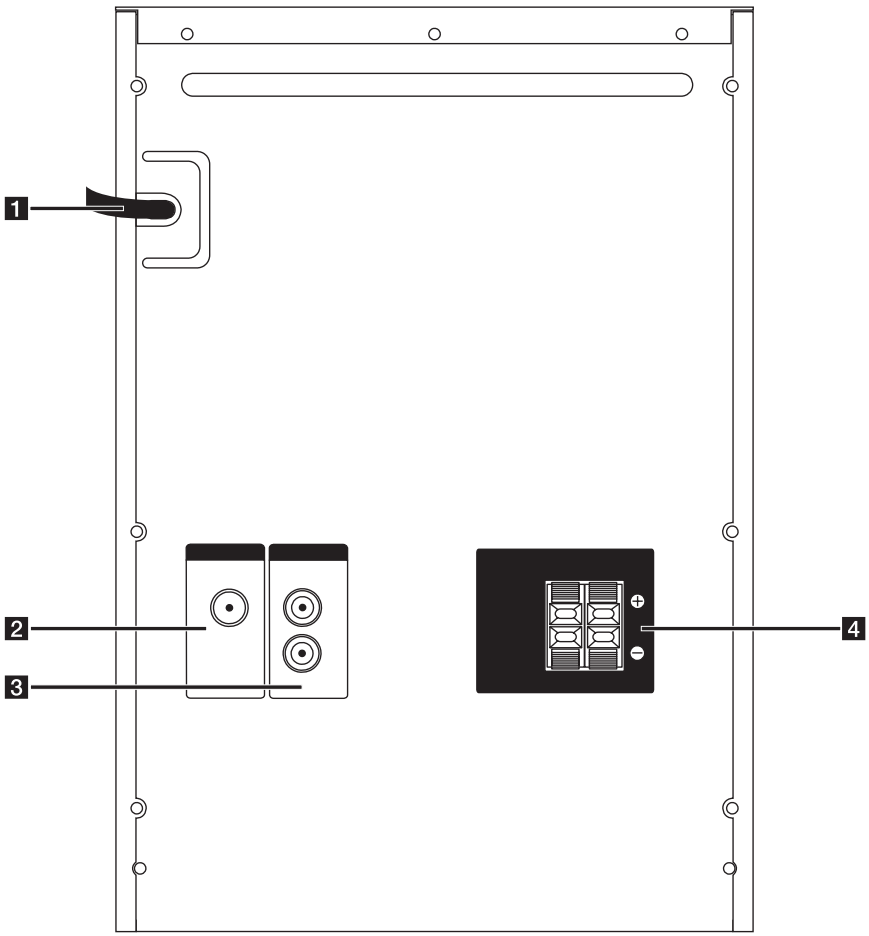

1 Power cord
2 **ANTENNA (FM)**
3 **AUX IN (L/R)** connectors
4 Speaker terminals

CM4520 Speaker terminal

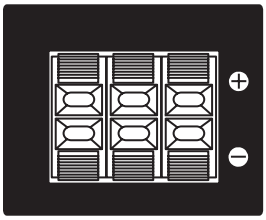

Connecting to speakers

Attaching the speakers to the unit

To connect the cable to the unit, press each plastic finger pad to open the connection terminals on the unit. Insert the wire and release the finger pad.

Connect the black stripe of each wire to the terminals marked - (minus) and the other end to the terminals marked + (plus).

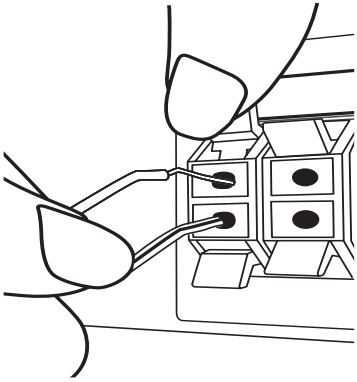

Caution

- Be careful to make sure children not to put their hands or any objects into the *speaker duct.
  *Speaker duct: A hole for plentiful bass sound on speaker cabinet (enclosure).
- The speakers contain magnet parts, so color irregularity may occur on the TV screen or PC monitor screen. Please use the speakers far away from either TV screen or PC monitor.
- Make sure to install the speaker with other people in order to prevent it from falling and causing injuries to the installer.

Optional Equipment Connection

AUX IN Connection

Connect an output of auxiliary device(Camcoder, TV, Player, etc) to the **AUX IN** (L/R) connector.

If your device has only one output for audio(mono), connect it to the left (white) audio jack on the unit.

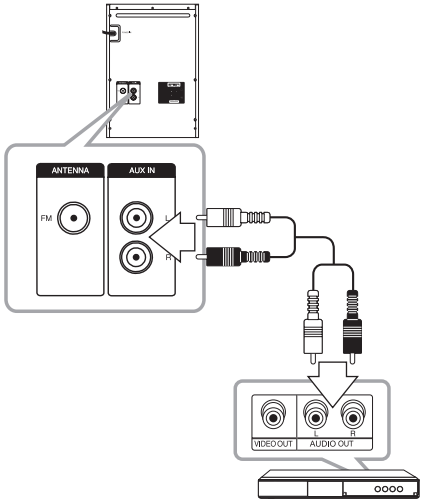

USB Connection

Connect the USB port of USB Memory (or MP3 player, etc.) to the USB port on the front of the unit.

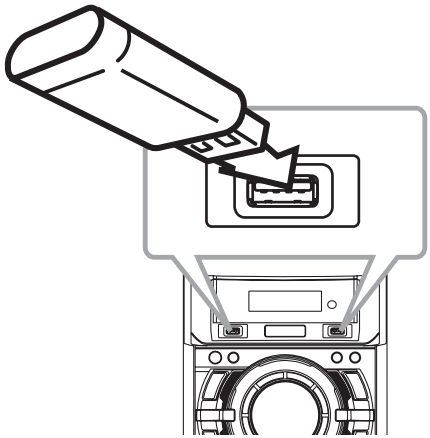

Note

Removing the USB Device from the unit.

1. Choose a different function/mode or press ■ **ENTER** twice in a row.
2. Remove the USB device from the unit.

Antenna Connection

Connect the supplied FM antenna for listening to the radio.

Connect the FM wire antenna to the FM antenna connector.

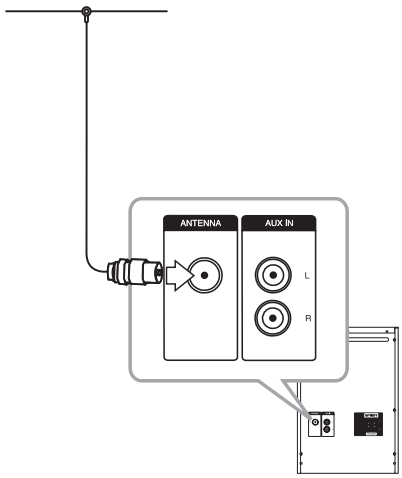

Note

Be sure to fully extend the FM wire antenna. After connecting the FM wire antenna, keep it horizontal.

Basic Operations

CD/USB Operations

1. Insert the disc by pressing ⏏(OPEN/CLOSE) or connect the USB device to the USB 1/2 port.
2. Select the CD or USB function by pressing **FUNCTION** on the remote control or **FUNC.** on the unit.
3. Select a track/file you want to play by pressing **I◀◀/▶▶I**.

To	Do this
Stop	Press ■ **ENTER**.
Playback	Press **▶/II**.
Pause	During playback, Press **▶/II**.
Skipping to the next/ previous track/file	During playback, press **I◀◀/▶▶I** to go to the next track/file or to return to the beginning of the current track/file. Press **I◀◀** twice briefly to step back to the previous track/file.
Selecting a track/file directly	Press **0** to **9** numerical buttons on the remote control to go to the desired file or track directly.
Searching for a section within a track/file	Press and hold **I◀◀/▶▶I** during playback and release it at the point you want to listen to.
Playing repeatedly or randomly	Press **REPEAT(MENU)** on the remote control repeatedly. The display changes in the following order. RPT1 -> RPT *DIR (only MP3/WMA) -> RPT ALL -> RANDOM -> OFF. *DIR : Directory

Other Operations

Programmed Playback

The program function enables you to store your favorite files from any disc or USB device.

A program can contain 20 tracks/files.

1. Insert a CD or a USB and wait for it to be ordered.
2. Press **PROGRAM/MEMORY** on the remote control in stop status.
3. Press **I◀◀/▶▶I** on the remote control or **I≪ / ≫I** on the unit to select a track/file.
4. Press **PROGRAM/MEMORY** again to save and select a next track/file.
5. Press **▶/II** to play the programmed music tracks/files.
6. To clear your selection, press ■ **ENTER** twice.

Note

The programs are also cleared when the disc or USB device is removed, the unit is powered off or the function is switched to others.

Displaying file information (ID3 TAG)

While playing an MP3 file containing file information, you can display the information by pressing **INFO**.

Searching for a folder

1. Press **PRESET·FOLDER ∧/∨** repeatedly until a desired folder appears on the display window.
2. Press **▶/II** to play it.
   The first file of the folder will be played.

Turn off the sound temporarily

Press **MUTE** to mute your unit.

You can mute your unit, for example, to answer the telephone, the "MUTE" is displayed in the display window.

Deleting an MP3/WMA file

You can delete a file, folder or format by pressing **DELETE**. (USB only)

1. Press **DELETE** repeatedly during selecting the MP3/WMA file. This function is supported only in stop status. The display changes in the following order.
   - DEL FILE : Deletes file.
   - DEL DIR : Deletes folder.
   - FORMAT : Formats USB.
2. To delete file/folder or format, press ▶/II on the remote control or press ▶II **ST./MO.** on the unit.
3. If you want to exit the current mode, press ■ **ENTER** on the remote control or press □ on the unit.

Caution

- Do not extract the USB device during operation.(play, delete, etc.)
- Regular back up is recommended to prevent data loss.
- The delete function may not be supported according to the USB status.

DEMO

In the power off state, it demonstrates the function on display window by pressing **SET/RDS/DEMO**. To cancel the DEMO, press it again.

Note

- While DEMO, this unit will keep DEMO status even if you unplug the power cord connection.
- You can enjoy other functions during the DEMO. Then the DEMO will pause to temporary.
  - Without input key in 10 sec, the DEMO will play back automatically.

AUTO DJ playback

Auto DJ blends the end of one song into the beginning of another for seamless playback. It equalizes volume across tracks for uninterrupted playback.

Press **AUTO DJ** on the remote control or unit repeatedly, the display changes as followings.
RANDOM (AUTO DJ RANDOM) -> RPT (AUTO DJ SEQUENTIAL) -> (AUTO DJ OFF)

Mode	Display Window	Description
OFF	- (AUTO DJ OFF)	-
RANDOM	RANDOM (AUTO DJ RANDOM)	The music is played randomly on this mode.
REPEAT	RPT (AUTO DJ SEQUENTIAL)	The music is played repeatedly on this mode.

Note

- Searching for a section within a track/file or playing repeatedly or randomly is not supported on the AUTO DJ mode.
- If you move to other functions or stop the music using ☐ on the unit (or ■ **ENTER** on the remote control) on AUTO DJ mode, AUTO DJ function will be disable.
- AUTO DJ function is not supported in the music file whose length is less than 60 seconds.
- During recording, AUTO DJ function is not available.
- If you change a disc while the AUTO DJ function is activated, the function is deactivated.

Radio Operations

Be sure that FM aerial is connected.
(Refer to the page 12)

Listening to the radio

1. Press **FUNCTION** on the remote control or **FUNC.** on the unit until FM appears in the display window.
   The last received station is tuned in.
2. Press and hold **TUNING-/+** on the remote control or **I<< / >>I** on the unit for about two seconds until the frequency indication starts to change, then release. Scanning stops when the unit tunes in a station.

   Or

   Press **TUNING-/+** on the remote control or **I<< / >>I** on the unit repeatedly.
3. Adjust the volume by rotating volume knob on the unit or by pressing **VOL +/-** on the remote control repeatedly.

Presetting the Radio Stations

You can preset 50 stations for FM.

Before tuning, make sure to turn down the volume.

1. Press **FUNCTION** on the remote control or **FUNC.** on the unit until FM appears in the display window.
2. Select the desired frequency by pressing **TUNING-/+** on the remote control or **I<< / >>I** on the unit.
3. Press **PROGRAM/MEMORY**. A preset number will flash in the display window.
4. Press **PRESET·FOLDER ∧/∨** to select the preset number you want.
5. Press **PROGRAM/MEMORY**. The station is stored.
6. Repeat steps 2 to 5 to store other stations.
7. To listen to a preset station, press **PRESET·FOLDER ∧/∨** or **0** to **9** numerical buttons.

Deleting all the saved stations

1. Press and hold **PROGRAM/MEMORY** for two seconds. "ERASE ALL" will flash up on the unit display.
2. Press **PROGRAM/MEMORY** to erase all saved radio stations.

Improving poor FM reception

Press **>II ST./MO.** on the unit or **►/II** on the remote control. This will change the tuner from stereo to mono and usually improve the reception.

Seeing information about a Radio station

The FM tuner is supplied with the RDS (Radio Data System) facility. This shows information about the radio station being listened to. Press **RDS** repeatedly to cycle through the various data types:

PS (Programme Service Name)
The name of the channel will appear in the display.

PTY (Programme Type Recognition)
The programme type (e.g. Jazz or News) will appear in the display.

RT (Radio Text)
A text message contains special information from the broadcast station. This text may scroll across the display.

CT (Time controlled by the channel)
This shows the time and date as broadcast by the station.

You can search the radio stations by programme type by pressing **RDS**. The display will show the last PTY in use. Press **PTY** one or more times to select your preferred programme type. Press and hold **I◄◄/►►I**. The tuner will search automatically. When a station is found the search will stop.

Sound adjustment

Setting the surround mode

This system has a number of pre-set surround sound fields. You can select a desired sound mode by using **SOUND EFFECT** on the remote control or **LG EQ** on the unit.

The displayed items for the Equalizer may be different depending on sound sources and effects.

On Display	Description
NATURAL	You can enjoy comfortable and natural sound.
Local Specialization equalizer	Regionally optimized sound effect. (FORRO/FUNK/ SERTANEJO/DANGDUT/ARABIC/ PERSIAN/INDIA/REGUETON/ MERENGUE/SALSA/SAMBA/ CUMBIA/AFRO HIP HOP)
AUTO EQ	Realizes the sound equalizer that is the most similar to the genre of which is included in the MP3 ID3 tag of song files.
POP CLASSIC JAZZ ROCK	This program lends an enthusiastic atmosphere to the sound, giving you the feeling you are at an actual rock pop, jazz or classic concert.
MP3 -- OPT	This function is optimized for compressible MP3 file. It improves the treble sound.
BASS	Reinforces the treble, bass and surround sound effect.
LOUDNESS	Improves the bass and treble sound.
BYPASS	You can enjoy the sound without equalizer effect.

Note

- On some speakers, sound may not be heard or heard in low sound depending on the sound mode.
- Maybe you need reset the surround mode, after switching the input, sometimes even after the sound track changed.
- By pressing **BASS BLAST** on the unit you can directly select the BYPASS or BASS BLAST sound.

Setting the Clock

1. Turn the unit on.
2. Press **CLOCK** for at least 2 seconds.
3. Choose time mode by pressing **I<< / >>I**.
   - AM 12:00 (for an AM and PM display) or 0:00 (for a 24 hour display)
4. Press **SET/RDS/DEMO** to confirm your selection.
5. Select the hours by pressing **I<< / >>I**.
6. Press **SET/RDS/DEMO**.
7. Select the minutes by pressing **I<< / >>I**.
8. Press **SET/RDS/DEMO**.

Setting the alarm

You can use the unit as an alarm clock.
You have to set the clock before setting the alarm.

1. Turn the unit on.
2. Press **TIMER**. Each of functions flashes.
3. Press **SET/RDS/DEMO** when the function you want to be woken by is showing.
4. "ON TIME" will be displayed. This is your desired time to the unit turns on. Press **I<< / >>I** to change the hours and minutes and press **SET/RDS/DEMO** to save.
5. The "OFF TIME" will be displayed. This is your desired time to the unit turns off.
6. Press **I<< / >>I** to change the hours and minutes and press **SET/RDS/DEMO** to save.
7. Press **I<< / >>I** to change the volume and press **SET/RDS/DEMO** to save. The clock icon "🕒" shows that the alarm is set.
8. Press **TIMER** button 2 times. You can check the setting status.

Note

- If you set the clock time, you can check the time by pressing **CLOCK** even when the player is turned off.
- If you set the clock time and alarm, you can check the alarm icon "🕒" by pressing **CLOCK** even when the player is turned off.
- If you set the clock time and alarm, you can check the alarm icon "🕒" and setting informaiton by pressing **TIMER** even when the unit is turned off.

Sleep Timer Setting

Press **SLEEP** repeatedly to select delay time between 10 and 180 minutes. After the delay time, the unit will be turned off.

To cancel the sleep function, press **SLEEP** repeatedly until "SLEEP 10" appears, and then press **SLEEP** once again while "SLEEP 10" is displayed.

Note

- You can check the remaining time before the unit is turned off.
- Press **SLEEP.** The remaining time appears in the display window.

Dimmer

Press **SLEEP** once. The display window will be darkened by half. To cancel it, press **SLEEP** repeatedly until dim off.

Advanced Operations

Listening to the sound from your external device

The unit can be used to play the sound from many types of external device. (Refer to the page 11)

1. Connect the external device to the **AUX IN** connector of the unit.
2. Turn the power on by pressing ⏻/| (Power).
3. Select the AUX function by pressing **FUNC.** on the unit or **FUNCTION** on the remote control.
4. Turn the external device and start it playing.

Recording to USB

You can record a various sound source to USB.

1. Connect the USB device to the unit.
2. Select a function by pressing **FUNC.** on the unit or **FUNCTION** on the remote control.

   One track/file recording - You can record to USB after playing a track/file you want.

   All tracks/files recording - You can record to USB after stop.

   Program list recording - After showing the programmed list, you can record it to USB. (Refer to the page 13)
3. Start the recording by pressing R **USB REC** on the unit or **USB REC** on the remote control.

   -If you connect both USB1 and USB2, press R **USB REC** on the unit or **USB REC** on the remote control when USB1 or USB2 which you want to record blinks in the display window.
4. To stop recording, press □ on the unit or ■ **ENTER** on the remote control.

Pausing recording

During recording, press R **USB REC** on the unit or **USB REC** on the remote control to pause recording. Press it again to restart recording. (Only Radio/AUX)

To select recording bit rate and speed

1. Press **USB REC** on the unit or **USB REC** on the remote control for longer than 3 seconds.
2. Use ⏮ / ⏭ on the unit or ⏮/⏭ on the remote control to select the bit rate.
3. Press **USB REC** on the unit or **USB REC** on the remote control again to select the recording speed.
4. Press ⏮ / ⏭ on the unit or ⏮/⏭ on the remote control to select a desired recording speed : (MP3/WMA CD, AUDIO CD only)

   X1 SPEED
   - You can listen to music while recording it.

   X2 SPEED
   - You can just record the music file.
5. Press **USB REC** on the unit or **USB REC** on the remote control to finish the setting.

Dubbing USB to USB

You can do dubbing a various sound source in USB1 to USB2 on USB function.

1. Connect a USB device including desired sound files to USB1.
2. Connect another USB device to USB2.
3. Start the recording by pressing **USB REC** on the unit or **USB REC** on the remote control.
4. To stop recording, press ☐ on the unit or ■ **ENTER** on the remote control.

Note

- You can check the recording percentage rate for the USB record on the display window during the recording. (MP3/WMA CD Only)
- During recording MP3/WMA, there is no sound.
- When you stop recording during playback, the file that has been recorded at that time will be stored. (Except MP3/WMA files)
- Do not remove the USB device or turn off the unit during USB recording. If not, an incomplete file may be made and not deleted on PC.
- If USB recording does not work, the message like "NO USB", "ERROR", "FULL" or "NO REC" is displayed on the display window.
- Multi card reader device or External HDD can not be used for USB recording.
- A file is recorded by about 512 Mbyte when you record for a long term.
- You may not store more than 999 files.
- It'll be stored as follows.

AUDIO CD	MP3/WMA	The other source*
CD_REC TRK_001 TRK_002	FILE_REC ABC(File name) DEF(File name)	EXT_REC AUDIO_001 AUDIO_002

* : TUNER, AUX and the like.

The making of unauthorized copies of copy-protected material, including computer programs, files, broadcasts and sound recordings, may be an infringement of copyrights and constitute a criminal offense. This equipment should not be used for such purposes.

Be responsible
Respect copyrights

Troubleshooting

Problem	Cause & Correction
No Power.	• The power cord is not plugged in. Plug in the power cord. • Check whether electricity failed. Check the condition by operating other electronic devices.
No sound.	• Check whether you select right function. Press **FUNCTION** and check the selected function. • If not, connect speaker cables correctly. Speaker cables connected correctly.
The unit does not start playback.	• An unplayable disc is inserted. Insert a playable disc. • No disc is inserted. Insert a disc. • The disc is dirty. Clean the disc. (Refer to the 25 page) • The disc is inserted upside down. Place the disc with the label or printed side facing upwards.
Radio stations cannot be tuned in properly.	• The antenna is positioned or connected poorly. Connect the antenna securely. • The signal strength of the radio station is too weak. Tune to the station manually. • No stations have been preset or preset stations have been cleared (when tuning by scanning preset channels). Preset some radio stations, see page 16 for details.
The remote control does not work properly.	• The remote control is too far from the unit. Operate the remote control within about 23 ft (7 m). • There is an obstacle in the path of the remote control and the unit. Remove the obstacle. • The batteries in the remote control are exhausted. Replace the batteries with new ones.

Trademarks and Licenses





Specifications

General					
Model		CM4620	CM4520	CM4420	CM4320
Power requirements		200 - 240 V, 50/60 Hz			
Power consumption		70 W	55 W	55 W	45 W
Dimensions (W x H x D)		202 X 300 X 297 mm			
Net Weight (Approx.)		2.85 kg			
Operating temperature		5 °C to 35 °C (41 °F to 95 °F)			
Operating humidity		5 % to 90 %			
Bus Power Supply (USB)		USB DC 5 V ⎓ 500 mA			

Inputs	
AUX IN	2.0 Vrms (1 kHz, 0 dB), 75 Ω, RCA jack (L, R) x 1

Tuner	
FM Tuning Range	87.5 to 108.0 MHz or 87.50 to 108.00 MHz

Amplifier					
Model		CM4620	CM4520	CM4420	CM4320
Stereo mode		220 W + 220 W (3 Ω at 1 KHz, THD 10 %)	130 W + 130 W (4 Ω at 1 KHz, THD 10 %)	130 W + 130 W (4 Ω at 1 KHz, THD 10 %)	80 W + 80 W (4 Ω at 1 KHz, THD 10 %)
Surround mode	Front	220 W + 220 W (3 Ω at 1 KHz, THD 10 %)	130 W + 130 W (4 Ω at 1 KHz, THD 10 %)	130 W + 130 W (4 Ω at 1 KHz, THD 10 %)	80 W + 80 W (4 Ω at 1 KHz, THD 10 %)
	Subwoofer	-	160 W (3 Ω at 1 KHz, THD 10 %)	-	-

CD	
Frequency Response	100 to 20 000 Hz
Signal-to-noise ratio	75 dB
Dynamic range	80 dB

Speaker specifications

Front speaker				
Model	CMS4620F	CMS4520F	CMS4520F	CMS4320F
Type	2 Way 2 Speaker			
Impedance	3 Ω	4 Ω		
Rated Input Power	220 W	130 W	130 W	80 W
Max. Input power	440 W	260 W	260 W	160 W
Net Dimensions (W x H x D)	246 X 335 X 444 mm	232 X 249 X 344 mm	232 X 249 X 344 mm	215 X 237 X 304 mm
Net Weight	5 kg	3.2 Kg	3.2 Kg	2.47 Kg

Subwoofer speaker	
Model	CMS4520W
Type	1 Way 1 Speaker
Impedance	3 Ω
Rated Input Power	160 W
Max. Input power	320 W
Net Dimensions (W x H x D)	250 X 334 X 344 mm
Net Weight	5.4 kg

- Design and specifications are subject to change without notice.

Maintenance

Notes on Discs

Handling Discs

Never stick paper or tape on the disc.

Storing Discs

After playing, store the disc in its case. Do not expose the disc to direct sunlight or sources of heat and never leave it in a parked car exposed to direct sunlight.

Cleaning Discs

Do not use strong solvents such as alcohol, benzine, thinner, commercially available cleaners, or anti-static spray intended for old vinyl records.

Handling the Unit

When shipping the unit

Please save the original shipping carton and packing materials. If you need to ship the unit, for maximum protection, re-pack the unit as it was originally packed at the factory.

Keeping the exterior surfaces clean

Do not use volatile liquids such as insecticide spray near the unit.

Wiping with strong pressure may damage the surface.

Do not leave rubber or plastic products in contact with the unit for a long period of time.

Cleaning the unit

To clean the player, use a soft, dry cloth. If the surfaces are extremely dirty, use a soft cloth lightly moistened with a mild detergent solution. Do not use strong solvents such as alcohol, benzine, or thinner, as these might damage the surface of the unit.

Maintaining the Unit

The unit is a high-tech, precision device. If the optical pick-up lens and disc drive parts are dirty or worn, the picture quality could be diminished. For details, please contact your nearest authorized service center.



CM4320-DU.DDEULL_ENG.indd 26 2012-02-29 2:15:08